Vicinity Plan

Project Team

Architect
Mike Davey — mike@bhdarchitects.com
BHD Architects
65 East Wadsworth Park Drive, Suite 205 — Phone - 801.571.0010
Draper, Utah 84020 — Mobile - 801.631.9722

Owner - Project Manager
David Flint — david.flint@ChurchofJesusChrist.org
UT Salt Lake City PM Office
4951 North Stratford Drive — Office - 801.240.0967
Stansbury Park, Utah 84074 — Mobile - 406.465.6467

Owner - Facilities Manager
David Rupp — drupp@ChurchofJesusChrist.org
Bear River UT FM Group
PO Box 39 — Mobile - 435.232.6563
Wellsville, Utah 84339

Surveyor
Nathan Weber — nate@diamondlandsurveying.com
Diamond Surveying
5243 S Green Pine Dr — Phone - 801.266.5099
Murray, Utah 84123 — Mobile - 801.455.9171

Soils Engineer
Michael Huber — mike@gshgeo.com
GSH Geotechnical Consultants
473 West 4800 South — Phone - 801.685.9190
Salt Lake City, Utah 84123 — Mobile - 801.243.9514

Civil Engineer
Daniel Canning — daniel@mcneileng.com
McNeil Engineering
8610 South Sandy Parkway, Suite 200 — Office - 801.255.7700
Sandy, Utah 84070 — Mobile - 801.984.2843

Landscape Architect
Scott Schoonover — scotts@mcneileng.com
McNeil Engineering
8610 South Sandy Parkway, Suite 200 — Office - 801.255.7700
Sandy, Utah 84070 — Mobile - 801.946.1546

Structural Engineer
Matt McBride — mattm@arwengineers.com
ARW Engineers
1594 West Park Circle #100 — Phone - 801.782.6008
Ogden, Utah 84404 — Mobile - 801.782.6008

Structural Engineer - Pavilion
Doug Farley — doug@farleyeng.com
Farley Engineering
1917 Osage Orange Avenue, Suite 100 — Phone - 801.274.3151
Holladay, Utah 84124

Fire Protection Consultant
Michael Christensen — rmcfutah@gmail.com
RMC-F Engineering
338 North 3550 West — Phone - 801.696.8244
Layton, Utah 84041 — Mobile - 801.696.8244

Mechanical Engineer
Dave Hansen — dave@engsystems.com
Engineered Systems Associates
1355 East Center Street — Office - 208.233.0501
Pocatello, Idaho 83201 — Mobile - 208.313.1544

Electrical Engineer
David Hinckley — dgh@spectrum-engineers.com
Spectrum Engineers
324 South State Street, Suite 400 — Phone - 801.401.8435
Salt Lake City, Utah 84111 — Mobile - 801.201.8369

Acoustical Engineer
Aaron Abbott — awa@spectrum-engineers.com
Spectrum Engineers
324 South State Street, Suite 400 — Office - 801.401.8430
Salt Lake City, Utah 84111 — Mobile - 801.678.6383

Nibley 6 &
Nibley UT West Stake

Approx. 3410 South 1200 West, Nibley, Utah

Church Property Number: 514-4728

Work by Owner

Item	Furnished by	Installed by	Item	Furnished by	Installed by
Special inspections and testing	Owner	Owner	Basketball backstops, equipment	Owner	Owner
HVAC test and balance	Owner	Owner	Volleyball sleeves, volleyball equipment	Owner	Contractor
Font water testing	Owner	Owner	Safety wall padding	Owner	Contractor
Hymn number display	Owner	Owner	Artwork	Owner	Owner
Carpet and carpet base	Owner	Owner	Piano, organ	Owner	Owner
Fixed glass display boards	Owner	Contractor	Phone and computer systems	Owner	Owner
Fixed tackboards	Owner	Contractor	Internet firewall, network switch, wireless access points	Owner	Contractor
Display cases	Owner	Contractor	Access control system	Owner	Owner
Interior signage	Owner	Contractor	Internet service provider modem	Owner	Owner
Pews	Owner	Owner	Televisions, television brackets	Owner	Contractor
Soap, paper towel, and toilet tissue dispensers	Owner	Owner	Pavilion kit and exterior drinking fountain, see C811	Owner	Contractor
Baby changing stations	Owner	Contractor	Exterior high security cylinders and cores	Owner	Owner
Refrigerator, range, microwave	Owner	Contractor	Network streaming equipment	Owner	Owner
Key cabinet	Contractor	Owner	Furniture, desks, chairs, equipment, etc.	Owner	Owner
			Projection screen	Owner	Contractor

Deferred Submittals

1. Fire sprinkler shop drawings
2. Fire alarm shop drawings
3. Trussed rafter shop drawings
4. Special inspector certifications.

Drawings Revision Schedule

#	Date	Description
1	29 May 2024	Bid Documents

Additive Bid Alternate

1. Alternate No. 1:
   Summary: Replace the roof batt insulation system at the building envelope with open-cell spray foam insulation as described below.
   A. At the building insulation envelope:
      a. Omit the batt insulation.
      b. Omit the continuous sheet vapor retarder.
      c. Install open-cell spray foam insulation as shown in J/A522. At areas where overbuilds connect to the main roof, install the spray foam insulation in a manner to create a continuous insulation envelope through the overbuild and out to the perimeter of the insulation envelope at the building walls.
      d. Install liquid-applied Type II vapor retarder as shown in J/A522.
      e. Areas of roof insulation which are indicated as "fill" only areas, such as overbuilds and attic areas over entries and vestibules, may retain batts or blown-in insulation for the fill only area.
   B. Omit the gypsum board that is shown attached to the bottom of the trusses above the classrooms and restrooms.
      a. Above the stairs [Detail A/A321], frame the area above the top of the stairs as shown. Retain the 6" rigid insulation as shown. Install spray foam insulation in place of the batt insulation and the areas noted as "fill with insulation". Install the spray foam in a manner to retain the required head room shown for the top of the stairs.
   C. Replace all cardboard baffles with SmartBaffles, continuous from eaves to the ridges or hips, as shown in J/A522.
   D. Refer to Specifications Section 07 2100 Thermal Insulation and 07 2500 Weather Barriers for specific requirements for the open-cell spray foam insulation and the liquid-applied Type II vapor retarder.

Drawing Index

General
G100 Cover Sheet
G101 Occupancy and Egress Plan
G501 Code Requirement Details
G601 Code Information

Civil
C101 Site Survey
C102 Site Survey
C105 Site Demolition Plan - North
C106 Site Demolition Plan - South
C111 Site Plan - North
C112 Site Plan - South
C113 Site Dimension Plan - North
C114 Site Dimension Plan - South
C121 Grading and Drainage Plan
C151 Site Utility Plan
C171 Erosion Control Plan
C501 Site Details
C502 Site Details
C503 Site Details
C504 Site Details
C521 Civil Details
C571 Civil Details
C601 Civil Notes
C801 Storage Building
C811 Pavilion Plan Views
C812 Pavilion Plan Views
C813 Pavilion Section and Detail Views
C814 Pavilion Roof Views and Details

Landscape
LS101 Landscape Plan
LS102 Landscape Plan
LS201 Irrigation Plan
LS202 Irrigation Plan
LS301 Landscape Details
LS401 Irrigation Details
LS402 Irrigation Details

Architectural
A101 Main Floor Plan
A102 Equipment Platform Plan
A111 Foundation and Floor Slab Dimension Plan
A112 Dimension Plan
A121 Wall Types Plan
A122 Equipment Platform Wall Types Plan
A131 Main Floor Wall Sheathing Plan
A132 Equipment Platform Wall Sheathing Plan
A133 Main Floor Insulation Plan
A134 Equipment Platform Insulation Plan
A135 Main Floor Gypsum Board Plan
A136 Equipment Platform Gypsum Board Plan
A141 Roof Plan
A151 Main Floor Reflected Ceiling Plan
A152 Equipment Platform Ceiling Plan
A161 Main Floor Finishes Plan
A162 Main Floor Furnishings Plan
A163 Main Floor Signage Plan
A164 Signage Schedule and Details
A201 Elevations
A202 Elevations
A211 Enlarged Exterior Elevations
A212 Enlarged Exterior Elevations
A213 Enlarged Exterior Elevations
A221 Enlarged Steeple Elevations and Details
A301 Building Sections
A302 Building Sections
A303 Building Sections
A304 Building Sections
A305 Building Sections
A306 Building Sections
A307 Building Sections
A308 Building Sections
A311 Wall Sections
A312 Wall Sections
A321 Stair Sections
A322 Enlarged Section
A323 Enlarged Section
A401 Enlarged Rostrum Plans and Elevations
A402 Rostrum Millwork Elevations
A403 Enlarged Platform Plans and Elevations
A404 Enlarged Restroom Plans and Elevations
A405 Enlarged Stake Suite Plans and Elevations
A406 Enlarged Tech. Room, Serving Area, Mother's Room Enlarged Plans and Elevations
A407 Enlarged Bishop's Suite Plans and Elevations
A408 Enlarged Storage Cabinets and Coat Racks Plans and Elevations
A501 Details
A511 Exterior Details
A521 Roof Details
A522 Roof Details
A523 Roof Details
A531 Ceiling Details
A532 Ceiling Step Details
A533 Ceiling Details
A541 Window Details
A542 Window Details
A543 Door Details
A544 Door Details
A545 Door Details
A546 Door Details
A551 Font Details
A552 Equipment Platform and Attic Details
A553 Base, and Threshold Details
A554 Miscellaneous Details
A601 Door Schedule
A602 Window Elevations
A701 Casework Details
A702 Casework Details
A703 Miscellaneous Interior Profiles
A704 Rostrum Casework Details
A705 Rostrum Casework Details
A706 Rostrum Casework
A707 Lectern Details
A901 Exterior Perspectives
A903 Interior Perspectives 2
A904 Interior Perspectives 3

Structural
S101 Footing and Foundation Plan
S102 Anchor Bolt, Holdown, and Wall Type Plan
S103 Rostrum Framing Plan
S104 Platform Framing Plan
S105 Equipment Platform Framing Plan
S106 High Roof Framing Plan
S107 Enlarged Roof Framing Plan
S201 Truss Elevations
S202 Truss Elevations
S203 Truss Elevations
S204 Truss Elevations
S205 Truss Elevations
S206 Truss Elevations
S208 Truss Elevations
S209 Truss Elevations
S210 Truss Elevations
S215 Truss Elevations
S401 Steeple Platform Framing and Details
S402 Steeple Details
S501 Foundation Details
S502 Foundation Details
S503 Foundation Details
S504 Foundation Details
S511 Rostrum Framing Details
S512 Rostrum Framing Details
S513 Equipment Platform Framing Details
S514 Equipment Platform Framing Details
S521 Roof Details
S522 Roof Details
S523 Roof Details
S524 Roof Details
S525 Roof Details
S526 Roof Details
S601 Schedules
S602 Schedules
S603 Schedules
S604 Schedules
S605 Schedules

Fire Protection
FS001 Fire Protection Legend and Notes
FS101 Fire Protection Floor Plan
FS102 Fire Protection Equipment Platform Floor Plan
FS103 Fire Protection Attic Floor Plan
FS301 Fire Protection Sections
FS302 Fire Protection Sections
FS501 Fire Protection Details
FS502 Fire Protection Details

Plumbing
P100 Foundation Plumbing Plan
P101 Plumbing Floor Plan
P102 Equipment Platform Plumbing Plan
P401 Large Scale Plumbing Plans and Isometrics
P501 Plumbing Details and Diagrams
P502 Plumbing Details and Diagrams
P601 Gas Piping Calculations and Isometric Plumbing Fixture Schedule

Mechanical
M101 Mechanical Floor Plan
M102 Equipment Platform Mechanical Plan
M301 Mechanical Sections
M302 Refrigerant Piping Schematic
M501 Mechanical Details
M502 Mechanical Details
M503 Mechanical Details
M504 Mechanical Details
M601 Mechanical Schedules
M602 Mechanical Schedules
ME101 Automatic Temperature Controls Floor Plans
ME701 Automatic Temperature Controls Diagrams
ME702 Automatic Temperature Controls Diagrams
ME703 Automatic Temperature Controls Wiring Diagram
ME704 Automatic Temperature Controls Wiring Diagrams
ME705 Automatic Temperature Control Panel Schematic

Electrical
ES111 Electrical Site Plan - North
ES112 Electrical Site Plan - South
E101 Main Floor Power Plan
E102 Equipment Platform Power Plan
E141 Roof Power Plan
E151 Main Floor Lighting Plan
E152 Equipment Platform Lighting Plan
E501 Electrical Details
E502 Electrical Details
E601 Panelboard Schedules
E602 Panelboard Schedules
E603 Symbols, Schedules and Notes
E604 Schedules and Notes
E605 One-line Diagram
E606 Lighting Control Wiring Diagrams
E607 Lighting Control Wiring Diagrams

Fire Alarm
FA101 Main Floor Fire Alarm Plan
FA102 Equipment Platform Fire Alarm Plan
FA601 Fire Alarm Diagram

Technology
ET101 Main Floor AV Floor Plan
ET102 Main Floor AV Ceiling Plan
ET601 AV Rough-in Schedules, Notes, Details, and Diagram
ET602 AV Rough-in Details
TA501 AV Systems Details
TA502 AV Systems Details
TA601 AV Systems Schedules and Notes
TA602 AV Systems Diagrams

bhd ARCHITECTS
www.bhdarchitects.com
Phone 801.571.0010
Fax 801.571.0303
Toll Free 888.571.0010
65 East Wadsworth Park Drive
Suite 205 Draper, Utah 84020

LICENSED ARCHITECT — Lale Theodore Harris — 6278-0301 — 23 MAY 2025 — STATE OF UTAH

THE CHURCH OF JESUS CHRIST OF LATTER-DAY SAINTS

Nibley 6 & Nibley UT West Stake
Approx. 3410 South 1200 West, Nibley, Utah
41.670809, -111.860775

Owner #: 514-4728
Plan Series: Heritage 24
County Parcel: 03050000016
BHD #: 2403
Date: 29 May 2025

Drawing Issue and Revision Schedule

#	Date	Description
1	29 May 2024	Bid Documents

Cover Sheet

G100

5/29/2025 12:42:50 PM

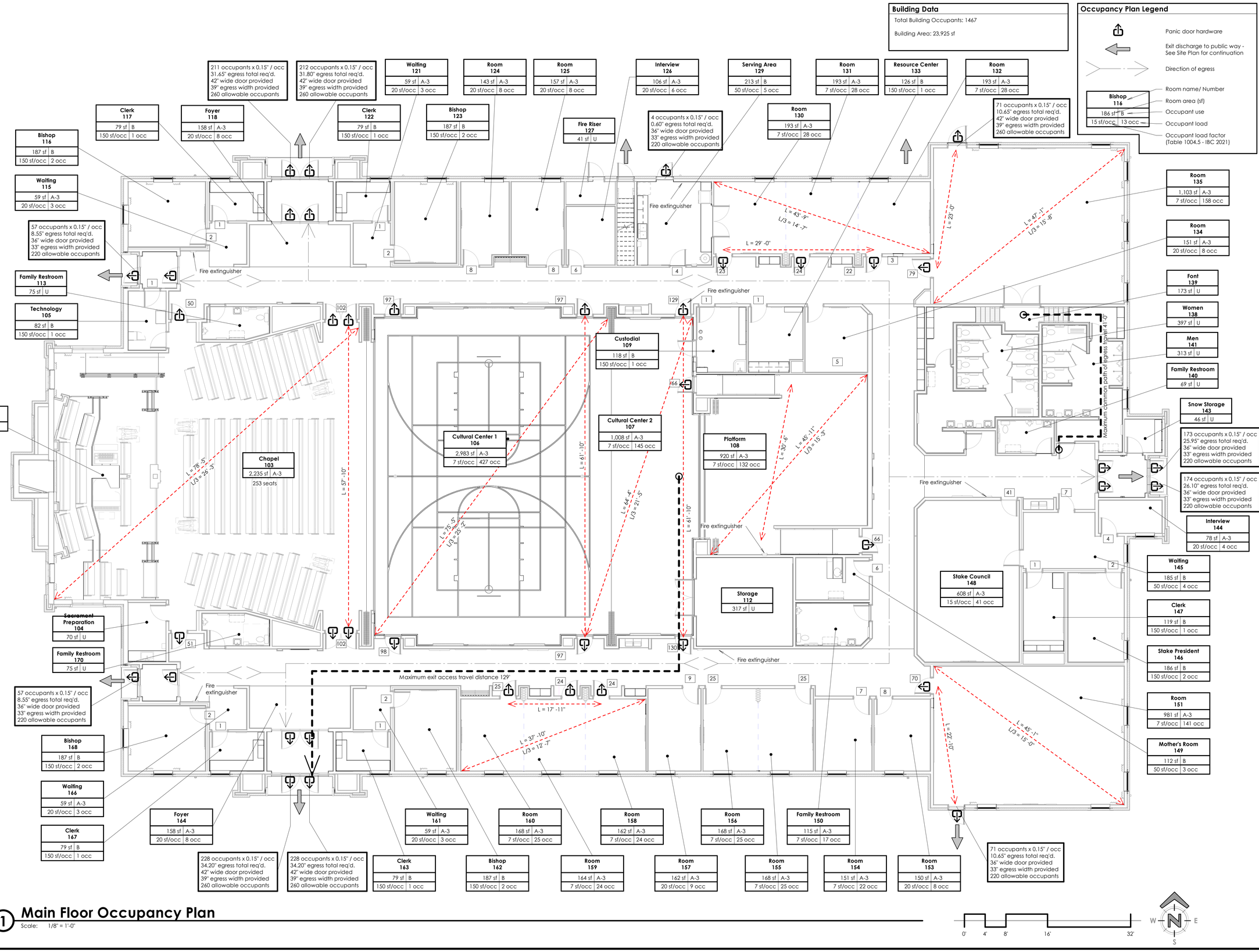

1 Main Floor Occupancy Plan

Scale: 1/8" = 1'-0"

5/29/2025 9:30:34 AM

bhd ARCHITECTS
www.bhdarchitects.com
Phone 801.571.0010
Fax 801.571.0303
Toll Free 888.571.0010
65 East Wadsworth Park Drive
Suite 205 Draper, Utah 84020

LICENSED ARCHITECT Late Theodore Harris 23 MAY 2025 STATE OF UTAH

THE CHURCH OF JESUS CHRIST OF LATTER-DAY SAINTS

Nibley 6 & Nibley UT West Stake

Approx. 3410 South 1200 West, Nibley, Utah
41.670809, -111.860775

Owner #: 501-4025
Plan Series: Her 17 SC Custom
County Parcel: 48-498-0306
BHD #: 21 42
Date: 22 Nov 2022

Drawing Issue and Revision Schedule

#	Date	Description

Occupancy and Egress Plan

G101

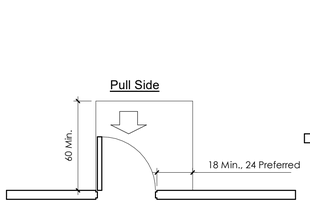

Front Approach - Swinging Door

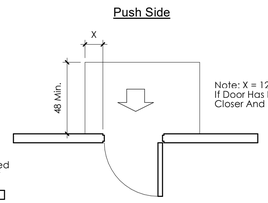

Front Approach - Swinging Door

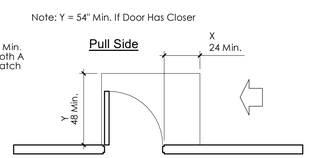

Latch Side Approach Swinging Door

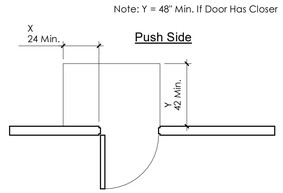

Latch Side Approach Swinging Door

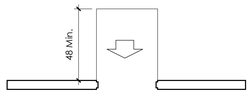

Front Approach - Sliding Or Folding Doors

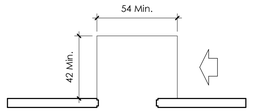

Slide Side Approach - Sliding Or Folding Doors

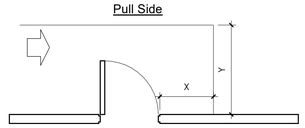

Hinge Side Approach - Swinging Door

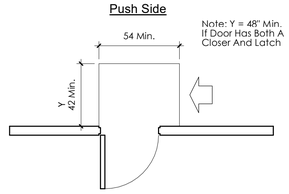

Side Approach - Swinging Door

A Clearances at Doors and Openings

Scale: 1/4" = 1'-0"

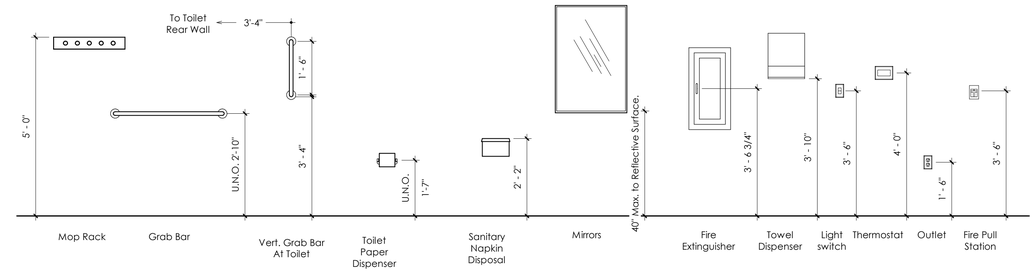

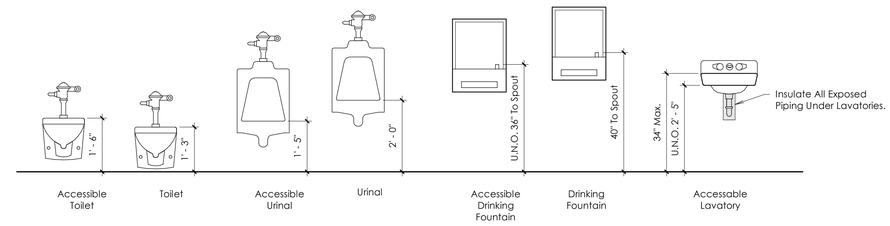

B Mounting Heights

Scale: 1/2" = 1'-0"

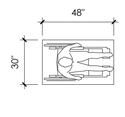

Clear Floor Space

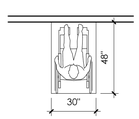

Forward Approach

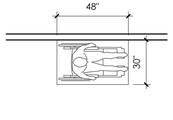

Parallel Approach

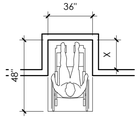

Clear Floor Space In Alcove

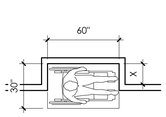

Clear Floor Space In Alcove

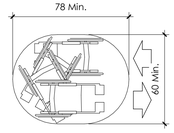

Space Needed For U-Turn

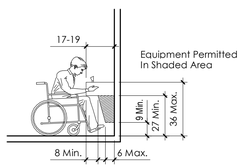

Spout Height And Knee Clearance

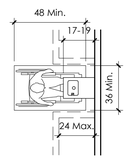

Clear Floor Space

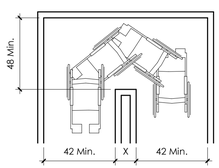

Turns Around An Obstruction

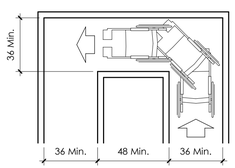

90° Turn

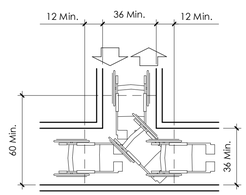

T-Shaped Space For 180° Turns

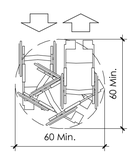

Wheelchair Turning Space

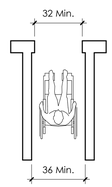

Minimum Clear Width For Single Wheelchair

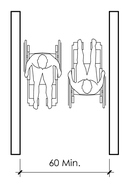

Minimum Clear Width For Two Wheelchairs

C Clearance and Clear Floor Space Requirements

Scale: 1/4" = 1'-0"

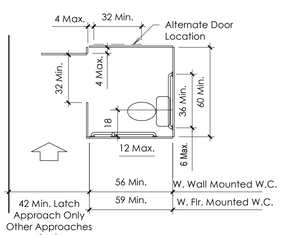

Standard Stall

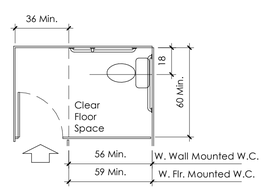

Standard Stall (End Of Row)

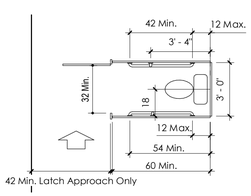

Ambulatory Stall

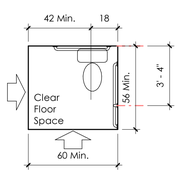

Clear Floor Space At Water Closet

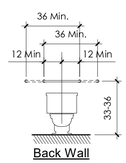

Back Wall

Grab Bars At Water Closets

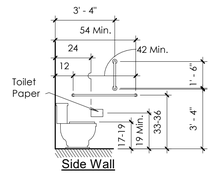

Side Wall

Grab Bars At Water Closets

D Clearances and Drinking Fountain

Scale: 1/4" = 1'-0"

E Clearances at Toilet Rooms

Scale: 1/4" = 1'-0"

bhd ARCHITECTS
www.bhdarchitects.com
Phone 801.571.0010
Fax 801.571.0303
Toll Free 888.571.0010
65 East Wadsworth Park Drive
Suite 205 Draper, Utah 84020

LICENSED ARCHITECT Late Theodore Harris 23 MAY 2025 6278-0301 STATE OF UTAH

THE CHURCH OF JESUS CHRIST OF LATTER-DAY SAINTS

Nibley 6 & Nibley UT West Stake

Approx. 3410 South 1200 West, Nibley, Utah
41.670809, -111.840775

BHD #: 2403
County Parcel: 03:050:0016
Plan Series: Heritage 24
Owner #: 514-4728
Date: 29 May 2025

Drawing Issue and Revision Schedule

#	Date	Description

Code Requirement Details

G501

5/29/2025 9:30:35 AM

GOVERNING BUILDING CODES:

BUILDING CODE:
2021 INTERNATIONAL BUILDING CODE (IBC)
WITH UTAH STATE AMENDMENTS

PLUMBING CODE:
2021 INTERNATIONAL PLUMBING CODE (IPC)

MECHANICAL CODE:
2021 INTERNATIONAL MECHANICAL CODE (IMC)

ELECTRICAL CODE:
2020 NATIONAL ELECTRICAL CODE (NEC)

FIRE CODE:
2021 INTERNATIONAL FIRE CODE (IFC)

ENERGY CONSERVATION:
2021 INTERNATIONAL ENERGY CONSERVATION CODE (IECC)

ACCESSIBILITY:
2017 ANSI A117.1 & 2021 IBC

Code Analysis

IBC 2021		
Occupancy	A3	Accessory Occupancies (508.2)
Total Occupancy	1,467	
Construction Type	V-B	Table 601
Height	31' -3 5/8"	40' - 0" (Table 504.3)
Stories	1	1 (Table 504.4)
Fire Protection		
Fire Sprinklers	Yes	903.2.1.3 Automatic Sprinkler Systems Req in A-3 Occupancy
Fire Barriers	No	
Fire Walls	No	
Building Area		
Ground Floor	22,525 SF	Allowable 24,000 SF (Table 506.2)
Equipment Platform	3,047 SF	The 3,047 sf area of the equipment platform is 40.7% of the 7,488 sf area of the room (open assembly area comprising the rostrum, chapel, cultural center, and platform) in which it is located. This complies with the 66.7% maximum allowable percentage in IBC 505.3.1.
Exit Access Travel Distance	129 feet	250' Allowable (Table 1017.2)
Common Path of Egress Travel	48 feet	75' Allowable (Table 1006.2.1)

Plumbing Fixture Count

Required Fixtures for 1,467 Occupants			
	Water Closets	**Lavatories**	**Drinking Fountains**
Men	734/150 = 4.89 = 5	734/200 = 3.67 = 4	1,467/1,000 = 1,467 = 2
Women	734/75 = 9.79 = 10	734/200 = 3.67 = 4	
Fixtures Provided			
Men	6 + 1 Family = 7	3 + 1 Family = 4	4 (2 high/low pairs)
Women	8 + 2 Family = 10	3 + 2 Family = 5	

Receivers For Assistive Listening

Seating With Speakers: 1,263
Required: 41 Total (11 To Be Hearing Aid Compatible.)

Rostrum Occupancy Schedule

Item	Count	Occupants	Total Occupants
Pew P1	1	3	3
Pew P2	3	3	9
Pew P3	2	4	8
Pew P5	2	4	8
Pew P7	1	6	6
Pew P13	1	8	8
Pew P16	1	5	5
Organ	1	1	1
Piano	1	1	1
Wheelchair Space	1	1	1
			50

Chapel Occupancy Schedule

Item	Count	Occupants	Total Occupants
Pew P2	2	3	6
Pew P8	4	6	24
Pew P9	6	7	42
Pew P10	2	7	14
Pew P11	2	7	14
Pew P12	2	8	16
Pew P14	1	10	10
Pew P15	9	14	126
Wheelchair Space	4	1	4
			256

bhd ARCHITECTS
www.bhdarchitects.com
Phone 801.571.0010
Fax 801.571.0303
Toll Free 888.571.0010
65 East Wadsworth Park Drive
Suite 205 Draper, Utah 84020

LICENSED ARCHITECT
Lafe Theodore Harris
23 MAY 2025
6278-0301
STATE OF UTAH

THE CHURCH OF
JESUS CHRIST
OF LATTER-DAY SAINTS

Nibley 6 &
Nibley UT West Stake

Approx. 3410 South 1200 West Nibley, Utah
41.670809, -111.866775

Date: 29 May 2025
BHD #: 2403
County Parcel: 03050,0016
Plan Series: Heritage 24
Owner #: 514-4728

Drawing Issue and Revision Schedule

#	Date	Description

Code Information

G601

5/29/2025 9:30:36 AM

ALTA/NSPS LAND TITLE SURVEY
FOR
THE CHURCH OF JESUS CHRIST OF LATTER-DAY SAINTS

LOCATED IN LOT 12, BLOCK 15, MILLVILLE CHURCH FARM SURVEY,
BEING A PART OF THE NORTHEAST QUARTER OF SECTION 29,
TOWNSHIP 11 NORTH, RANGE 1 EAST, SALT LAKE BASE AND MERIDIAN,
NIBLEY CITY, CACHE COUNTY, UTAH
APRIL 2025

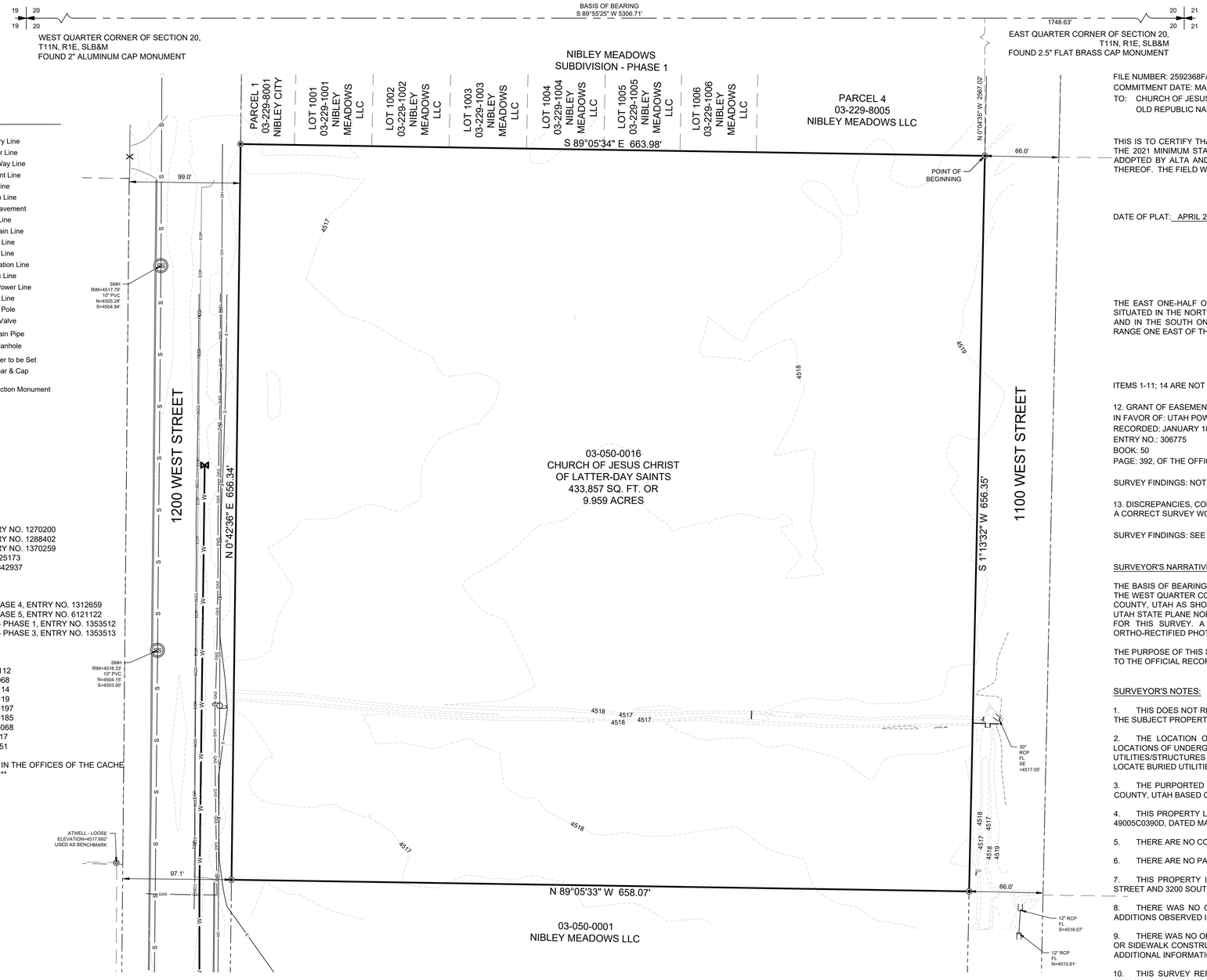

LEGEND

- Boundary Line
- Adjoiner Line
- Right-of-Way Line
- Easement Line
- Tie Line
- Section Line
- Edge of Pavement (EOP)
- Gas Line (GAS)
- Storm Drain Line (SD)
- Sewer Line (S)
- Water Line (W)
- Communication Line (COM)
- Electric Line (E)
- Overhead Power Line (OH)
- Fence Line
- Power Pole
- Water Valve
- Storm Drain Pipe
- Sewer Manhole
- Property Corner to be Set
- Found Rebar & Cap
- Found Quarter Section Monument

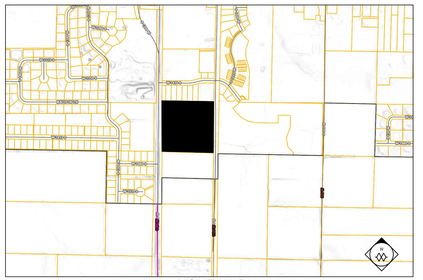

VICINITY MAP
NOT TO SCALE

FILE NUMBER: 2592368FA
COMMITMENT DATE: MARCH 27, 2025 AT 8:00 AM
TO: CHURCH OF JESUS CHRIST OF LATTER-DAY SAINTS, A UTAH CORPORATION SOLE
OLD REPUBLIC NATIONAL TITLE INSURANCE COMPANY-COMMERCIAL

THIS IS TO CERTIFY THAT THIS MAP OR PLAT AND THE SURVEY ON WHICH IT IS BASED WERE MADE IN ACCORDANCE WITH THE 2021 MINIMUM STANDARD DETAIL REQUIREMENTS FOR ALTA/NSPS LAND TITLE SURVEYS, JOINTLY ESTABLISHED AND ADOPTED BY ALTA AND NSPS, AND INCLUDES ITEMS 1, 2, 3, 4, 5, 7(C), 8, 9, 11(A), 13, 14, 16, 17 AND 18 OF THE TABLE A THEREOF. THE FIELD WORK WAS COMPLETED ON APRIL 4, 2025.

DATE OF PLAT: APRIL 22, 2025

PROFESSIONAL LAND SURVEYOR
NATHAN B. WEBER, PLS
LICENSE NO. 5152762

LEGAL DESCRIPTION

THE EAST ONE-HALF OF LOT TWELVE (12), BLOCK (15), MILLVILLE CHURCH FARM SURVEY; AND FURTHER DESCRIBED AS SITUATED IN THE NORTHEAST QUARTER OF SECTION TWENTY-NINE (29), TOWNSHIP ELEVEN (11), NORTH RANGE ONE EAST, AND IN THE SOUTH ONE-HALF OF THE SOUTHEAST QUARTER OF SECTION TWENTY (20), TOWNSHIP ELEVEN (11) NORTH, RANGE ONE EAST OF THE SALT LAKE MERIDIAN.

SCHEDULE B, PART II EXCEPTIONS

ITEMS 1-11; 14 ARE NOT SHOWN INTENTIONALLY AS THEY ARE NOT SURVEY ITEMS.

12. GRANT OF EASEMENT AND/OR RIGHT-OF-WAY AND THE TERMS, CONDITIONS AND LIMITATIONS CONTAINED THEREIN:
IN FAVOR OF: UTAH POWER & LIGHT COMPANY
RECORDED: JANUARY 18, 1961
ENTRY NO.: 306775
BOOK: 50
PAGE: 392, OF THE OFFICIAL RECORDS

SURVEY FINDINGS: NOT PLOTTED, DOES NOT AFFECT THIS SITE AND AFFECTS PROPERTIES WEST OF 1200 WEST STREET.

13. DISCREPANCIES, CONFLICTS IN BOUNDARY LINES, SHORTAGE IN AREA, ENCROACHMENTS, OR ANY OTHER FACTS WHICH A CORRECT SURVEY WOULD DISCLOSE, AND WHICH ARE NOT SHOWN BY THE PUBLIC RECORDS.

SURVEY FINDINGS: SEE THIS SURVEY FOR ADDITIONAL INFORMATION.

SURVEYOR'S NARRATIVE:

THE BASIS OF BEARING IS SOUTH 89°55'25" WEST BETWEEN THE FOUND MONUMENTS AT THE EAST QUARTER CORNER AND THE WEST QUARTER CORNER OF SECTION 20, TOWNSHIP 11 NORTH, RANGE 1 EAST, SALT LAKE BASE AND MERIDIAN, CACHE COUNTY, UTAH AS SHOWN. THE SURVEY CONTROL WAS ESTABLISHED WITH GPS. THE GPS DATA WAS MEASURED ON THE UTAH STATE PLANE NORTH ZONE USF NAD83 SYSTEM AND WAS THEN PROJECTED TO A LOW DISTORTION GROUND SYSTEM FOR THIS SURVEY. A UAS SYSTEM WAS USED TO ASSIST IN MEASURING AND MAPPING THE PROPERTY AND AN ORTHO-RECTIFIED PHOTO OF THE SITE WAS USED FOR MAPPING FEATURES SUCH AS ROADWAYS AND WATERWAYS.

THE PURPOSE OF THIS SURVEY IS TO RETRACE AND MONUMENT THE BOUNDARY OF THE DESCRIBED PROPERTY ACCORDING TO THE OFFICIAL RECORDS AND THE LOCATION OF PERTINENT EXISTING IMPROVEMENTS LOCATED ON THE GROUND.

SURVEYOR'S NOTES:

1. THIS DOES NOT REPRESENT A TITLE SEARCH BY THE SURVEYOR. TITLE INFORMATION WAS PROVIDED BY OTHERS FOR THE SUBJECT PROPERTY.

2. THE LOCATION OF UNDERGROUND UTILITIES AS SHOWN HEREON ARE BASE ON ABOVE GROUND STRUCTURES. LOCATIONS OF UNDERGROUND UTILITIES/STRUCTURES MAY VARY FROM LOCATIONS SHOWN HEREON.ADDITIONAL BURIED UTILITIES/STRUCTURES MAY BE ENCOUNTERED. NO EXCAVATIONS WERE MADE DURING THE PROGRESS OF THIS SURVEY TO LOCATE BURIED UTILITIES/STRUCTURES. BEFORE EXCAVATIONS ARE BEGUN, PLEASE CONTACT APPROPRIATE AGENCIES.

3. THE PURPORTED ADDRESS FOR THIS SITE IS NOT PROVIDED, BUT REFERENCED TO PARCEL NO. 03-050-0016, CACHE COUNTY, UTAH BASED ON DOCUMENTATION PROVIDED AT THE TIME OF THE SURVEY.

4. THIS PROPERTY LIES WITHIN THE FLOOD ZONE 'X' (NO SHADING) ACCORDING TO FEMA FLOOD MAP SERVICE, MAP NO 49005C0390D, DATED MAY 9, 2023. ZONE 'X' (NO SHADING) IS DEFINED AS "AREA OF MINIMAL FLOOD HAZARD".

5. THERE ARE NO CONSTRUCTED BUILDINGS ON THIS SITE.

6. THERE ARE NO PAVED PARKING STALLS ON THIS SITE.

7. THIS PROPERTY IS APPROXIMATELY 1400 FEET SOUTHEASTERLY FROM THE INTERSECTION OF 1200 WEST STREET STREET AND 3200 SOUTH STREET.

8. THERE WAS NO OBSERVED EVIDENCE OF RECENT EARTH MOVING WORK, BUILDING CONSTRUCTION, OR BUILDING ADDITIONS OBSERVED IN THE PROCESS OF CONDUCTING THE FIELDWORK FOR THIS SURVEY.

9. THERE WAS NO OBSERVED EVIDENCE OF CHANGES IN STREET RIGHT OF WAY LINES OR EVIDENCE OF RECENT STREET OR SIDEWALK CONSTRUCTION OR REPAIRS THAT WERE OBSERVED IN THE PROCESS OF CONDUCTING THE FIELDWORK. NO ADDITIONAL INFORMATION HAS BEEN PROVIDED TO THE SURVEYOR THAT WOULD INDICATE OTHERWISE.

10. THIS SURVEY REFLECTS PLOTTABLE EASEMENTS THAT ARE LOCATED IN NEIGHBORING PROPERTIES THAT WOULD DIRECTLY AFFECT THIS SITE.

REFERENCE DOCUMENTATION

DEEDS

R-1 - SPECIAL WARRANTY DEED, ENTRY NO. 1270200
R-2 - SPECIAL WARRANTY DEED, ENTRY NO. 1288402
R-3 - SPECIAL WARRANTY DEED, ENTRY NO. 1370259
R-4 - WARRANTY DEED, ENTRY NO. 1225173
R-5 - WARRANTY DEED, ENTRY NO. 1342937

SUBDIVISION PLATS

R-6 - NIBLEY FARMS SUBDIVISION - PHASE 4, ENTRY NO. 1312659
R-7 - NIBLEY FARMS SUBDIVISION - PHASE 5, ENTRY NO. 6121122
R-8 - NIBLEY MEADOWS SUBDIVISION - PHASE 1, ENTRY NO. 1353512
R-9 - NIBLEY MEADOWS SUBDIVISION - PHASE 3, ENTRY NO. 1353513

SURVEYS

R-10 - BOUNDARY SURVEY NO. 2015-0112
R-11 - PROPERTY SURVEY NO. 2001-0068
R-12 - PROPERTY SURVEY NO. 2001-0114
R-13 - PROPERTY SURVEY NO. 2020-0119
R-14 - RECORD OF SURVEY NO. 2003-0197
R-15 - RECORD OF SURVEY NO. 2019-0185
R-16 - RECORD OF SURVEY NO. 2022-0068
R-17 - MILLVILLE CITY SURVEY NO. 06-17
R-18 - MILLVILLE CITY SURVEY NO. 03-51

*** REFERENCE DOCUMENTS ON FILE IN THE OFFICES OF THE CACHE COUNTY RECORDER AND SURVEYOR***

N

GRAPHIC SCALE
50 0 25 50 100
1" (INCH) = 50' (FEET)

DIAMOND LAND SURVEYING
6891 South 700 West Ste. 150
Midvale, Utah 84047
Phone (801) 266-5099 Fax (801) 266-5032
office@diamondlandsurveying.com
www.diamondlandsurveying.com

Boundary Surveys
Topography Surveys
Subdivisions
Construction Staking
A.L.T.A. & N.S.P.S. Surveys

ALTA/NSPS LAND TITLE SURVEY
PARCEL NO. 03-050-0016
NIBLEY, UTAH

THE CHURCH OF JESUS CHRIST

LICENSED PROFESSIONAL LAND SURVEYOR
4/22/25
No. 5152762
NATHAN B. WEBER
STATE OF UTAH

LOCATED IN LOT 12, BLOCK 15, MILLVILLE CHURCH FARM SURVEY, BEING A PART OF THE NORTHEAST QUARTER OF SECTION 29, TOWNSHIP 11 NORTH, RANGE 1 EAST, SALT LAKE BASE AND MERIDIAN,
NIBLEY CITY, CACHE COUNTY, UTAH

bhd ARCHITECTS
www.bhdarchitects.com
Phone 801.571.0010
Fax 801.571.0303
Toll Free 888.571.0010
65 East Wadsworth Park Drive
Suite 205 Draper, Utah 84020

THE CHURCH OF JESUS CHRIST OF LATTER-DAY SAINTS

Nibley 6 & Nibley UT West Stake
Approx. 3410 South 1200 West, Nibley, Utah
41.670809, -111.850772

Owner #: 514-4728
Plan Series: Heritage 24
County Parcel: 03-050-0016
BHD #: 2403
Date: 29 May 2025

Drawing Issue and Revision Schedule

#	Date	Description
1	29 May 2025	Bid Documents

Survey

C100

Printed: 29 May 2025 9:35 AM

1 Existing Conditions

Scale: 1" = 50'-0"

Photo taken
21 Dec 2024

Click here for drone data

0' 25' 50' 100' 200'

W N E S

Printed: 29 May 2025 11:54 AM

bhd ARCHITECTS
www.bhdarchitects.com
Phone 801.571.0010
Fax 801.571.0303
Toll Free 888.571.0010
65 East Wadsworth Park Drive
Suite 205 Draper, Utah 84020

LICENSED ARCHITECT
Late Theodore Harris
6278-0301
29 MAY 2025
STATE OF UTAH

THE CHURCH OF JESUS CHRIST OF LATTER-DAY SAINTS

Nibley 6 & Nibley UT West Stake

Approx. 3410 South 1200 West, Nibley, Utah
41.670809, -111.860775

BHD #: 2403
County Parcel: 03050:0016
Plan Series: Heritage 24
Owner #: 514-4728
Date: 29 May 2025

Drawing Issue and Revision Schedule

#	Date	Description
1	29 May 2025	Bid Documents

Existing Conditions

C101

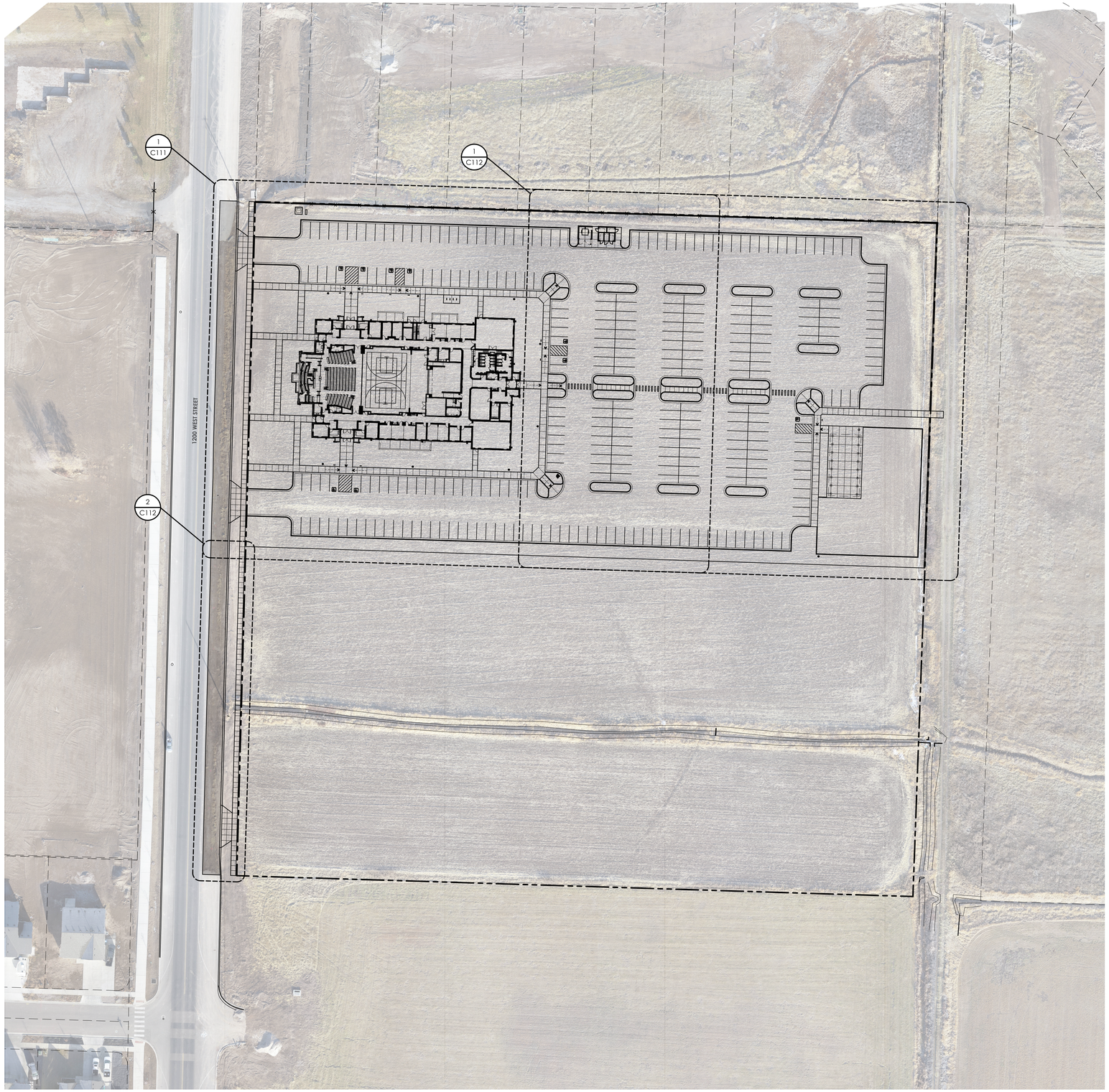

1 **Key Plan**
Scale: 1" = 50'-0"

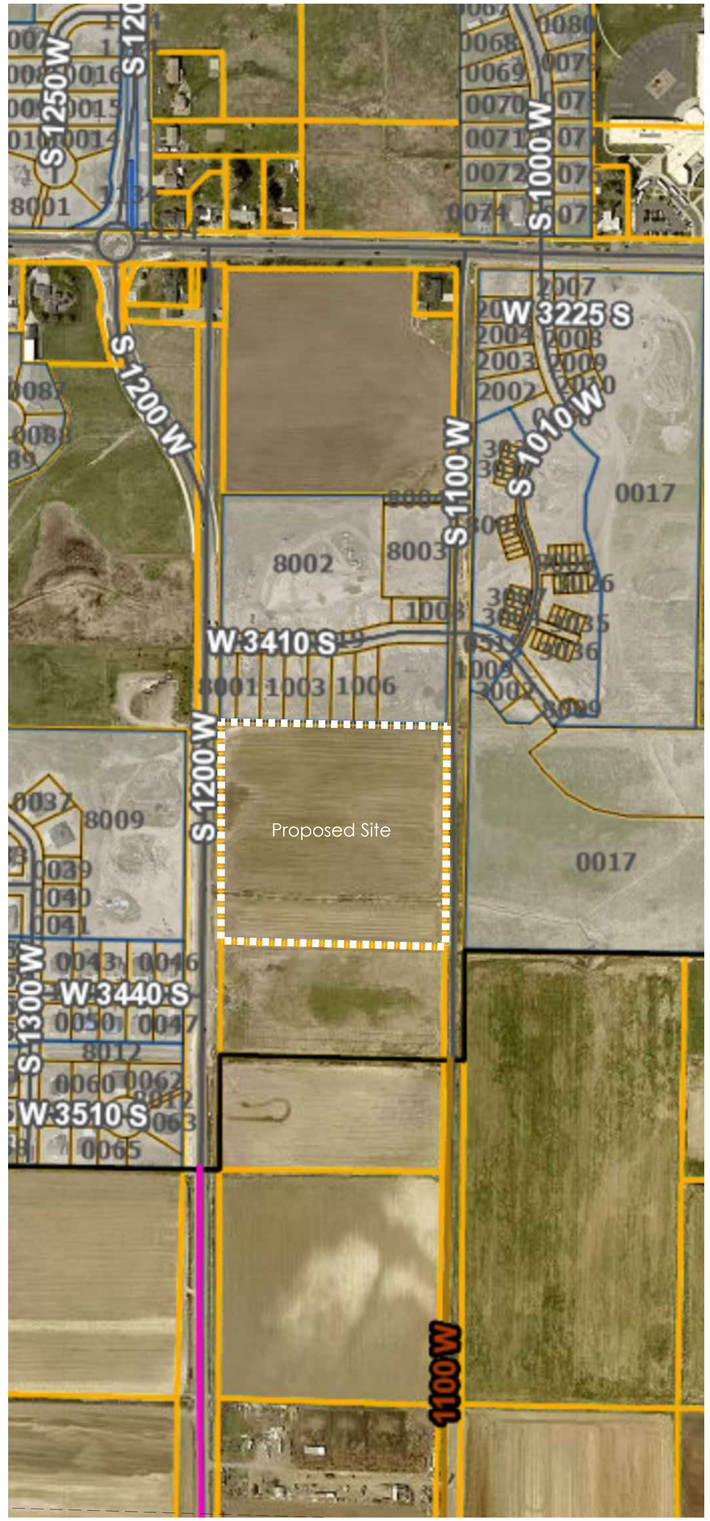

2 **Vicinity Site Plan**
Scale: Not to scale

0' 25' 50' 100' 200'

bhd ARCHITECTS
www.bhdarchitects.com
Phone 801.571.0010
Fax 801.571.0303
Toll Free 888.571.0010
65 East Wadsworth Park Drive
Suite 205 Draper, Utah 84020

LICENSED ARCHITECT
Lafe Theodore Harris
6928898-0301
29 May 2025
STATE OF UTAH

THE CHURCH OF
JESUS CHRIST
OF LATTER-DAY SAINTS

Nibley 6 &
Nibley UT West Stake

Approx. 3410 South 1200 West, Nibley, Utah
41.670809, -111.860775

Date:	BHD #:	County Parcel:	Plan Series:	Owner #:
29 May 2025	2403	03:050:0016	Heritage 24	514-4728

Drawing Issue and Revision Schedule

#	Date	Description
1	29 May 2025	Bid Documents

Key Plan and Vicinity Site Plan

C102

Printed: 29 May 2025 11:57 AM

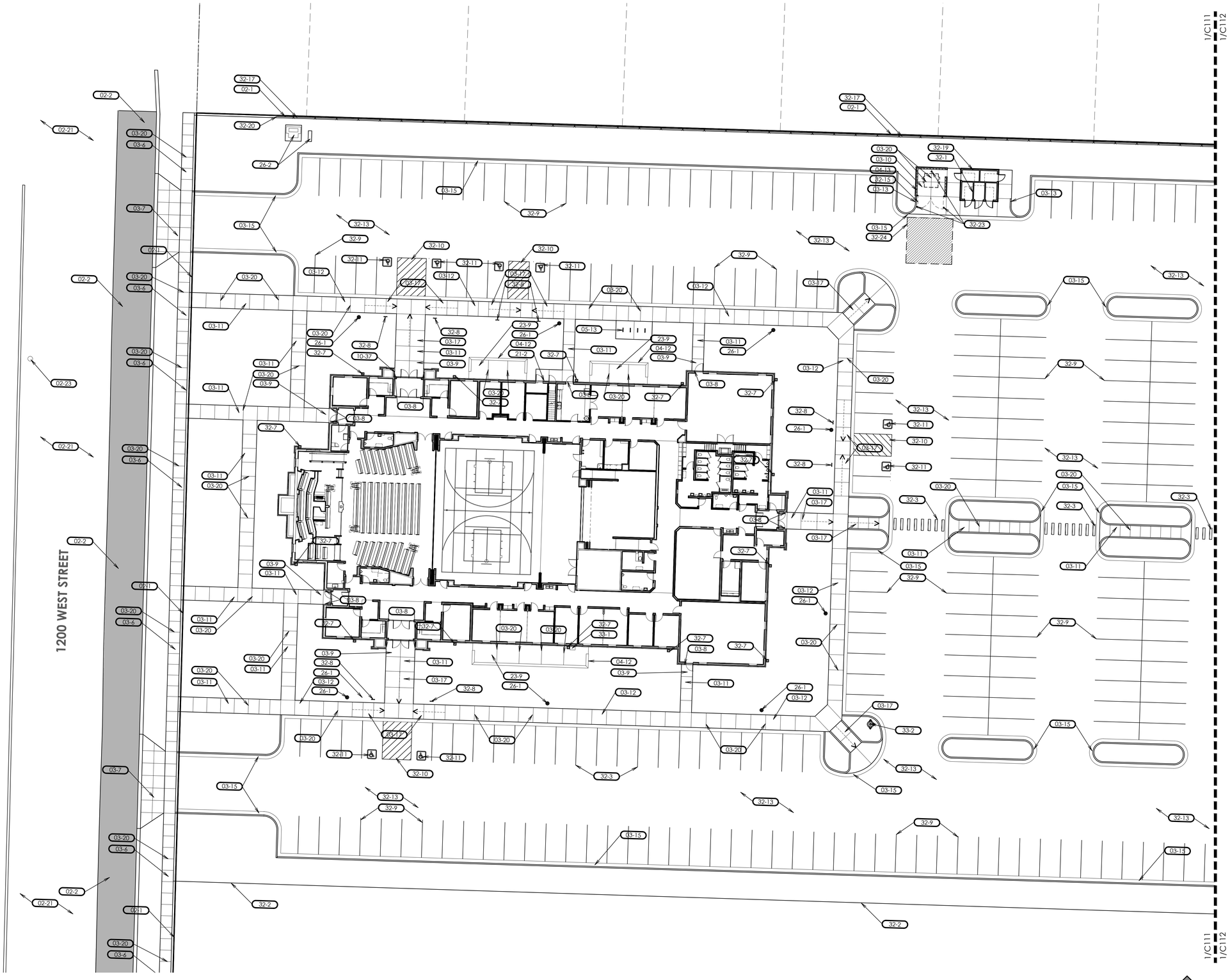

1 Site Architectural Plan - West Side

Scale: 1" = 20'-0"

0' 10' 20' 40' 80'

N

General Notes

A. The contractor shall verify all existing site conditions prior to bidding. Coordinate all work affecting adjacent properties with the respective property owners prior to any demolition or construction work. Repair and replace all existing items on adjacent properties damaged or affected during construction to the satisfaction of the property owner.

B. Refer to ConsLog for Information Available to Bidders, including the geotechnical report.

C. The contractor shall enclose the entire area of work with a temporary fence and maintain a safe pedestrian route for all users of the site throughout construction.

D. For the overexcavation and fill detail see F/C503. for overexcavation and fill notes. See C504 for unit pricing notes required to be turned in at bidding. See C504.

E. Refer to the Specifications for required locations of concrete control joints and expansion joints. Submit a proposed control joint and expansion joint plan to the Architect for approval prior to installation of site concrete.

F. The new building and parking lot are parallel or perpendicular to north property line.

G. The contractor shall install all components of the building and site to meet accessibility standards as shown in 2017 ICC A117.1.

Keyed Notes

02-1 Existing property line. See survey.
02-2 Saw cut 2 feet from edge of asphalt for a clean cut.
02-3 Existing light pole to remain.
02-21 Existing street paving to remain. See site survey.
02-23 Existing manhole to remain.
03-6 Install new city sidewalk per city standards.
03-7 New concrete drive approach per city standards. Reinforce as required by the city.
03-8 Align sidewalk with building foundation wall.
03-9 Building or stair landing. 2% slope maximum.
03-10 Concrete pad at dumpster and in front of dumpster. See 1/C503.
03-11 New concrete sidewalk. See A & H/C501. Typical.
03-12 New integral sidewalk, curb, and gutter. See B/C501. See Grading and Drainage Plan for infall / outfall of gutter.
03-13 Transition height of curb from full height to even with sidewalk and gutter in 5'-0". See E/C501.
03-14 New concrete mow strip. Typical. See K/C501.
03-15 New concrete curb & gutter - typical. See typical details C501 & infall / outfall notation on the Grading & Drainage Site Plans.
03-16 New curb ramp. See grading and drainage plan.
03-17 Sloped section of concrete sidewalk at <5% slope. See grading plan for exact slope.
03-18 New concrete mow strip. Typical. See E/C504
03-20 New control joint in concrete flatwork. See H/C501.
04-12 Mechanical enclosure wall. See C and D/C504.
04-13 Dumpster enclosure wall. See 1/C503.
05-13 New stainless steel bike rack. See L/C501.
10-37 New knox box 3200 series recessed in brick (verify type and location with fire department).
21-2 New fire department connection with locking knox plugs - model 3050 or 3043 (verify with fire department).
23-9 New mechanical equipment. See Mechanical Sheets.
26-1 New pole light and concrete base. See D/C503 and electrical sheets.
26-2 New concrete transformer pad and CT can per power company requirements. See Electrical Sheets.
28-2 New fire alarm control panel location. See A101 and electrical sheets.
32-1 New irrigation controller. See landscape sheets.
32-2 Landscape metal edge.
32-3 New painted crosswalk.
32-4 New pavilion, see Sheets C811, C812, C813, and C814.
32-5 New Nyloplast area drain or yard drain box. See C/C502 and Grading and Drainage Plan.
32-6 New curb inlet box. See Site Details and Grading and Drainage Plan.
32-7 New roof drain box at downspout. See utility sheets and C/C502. Typical.
32-8 New accessible parking sign. See A/C502.
32-9 New painted parking lines. Parking lines shall be 4" wide. Typical.
32-10 New accessible parking access aisle. Paint lines shall be 4" wide at a 45° angle and 2'-0" spacing.
32-11 New blue & white painted accessible parking symbol.
32-13 New asphalt paving - typical. See F/C501 and overexcavation and fill notes.
32-15 6'-0" tall steel dumpster gates. See 1/C503.
32-17 New 6'-0" tall black vinyl coated post and rails. Black vinyl coated privacy slates. See F/C504.
32-19 New storage building. See C801.
32-20 End of vinyl fence.
32-23 Bollard. See B/C502.
32-24 (2) 3" layers of asphalt over 14" aggregate base in shaded area.
33-1 New gas meter per utility company requirements. See utility plan and plumbing sheets.
33-2 New fire hydrant and valve per city standards. See civil sheets.
33-3 Sewer cleanout. See civil sheets.
33-6 New irrigation water meter per city and water district standards. Coordinate with the Utility Plan.

bhd ARCHITECTS
www.bhdarchitects.com
Phone 801.571.0010
Fax 801.571.0303
Toll Free 888.571.0010
65 East Wadsworth Park Drive
Suite 205 Draper, Utah 84020

LICENSED ARCHITECT Lafe Theodore Harris 6278-0301 STATE OF UTAH 23 MAY 2025

THE CHURCH OF JESUS CHRIST OF LATTER-DAY SAINTS

Nibley 6 & Nibley UT West Stake

Approx. 3410 South 1200 West, Nibley, Utah
41.672809, -111.860775

Owner #: 514-4728
Plan Series: Heritage 24
County Parcel: 03:050:0016
BHD #: 2403
Date: 29 May 2025

Drawing Issue and Revision Schedule

#	Date	Description
1	29 May 2025	Bid Documents

Site Architectural Plan - West Side

C111

Printed: 29 May 2025 11:58 AM

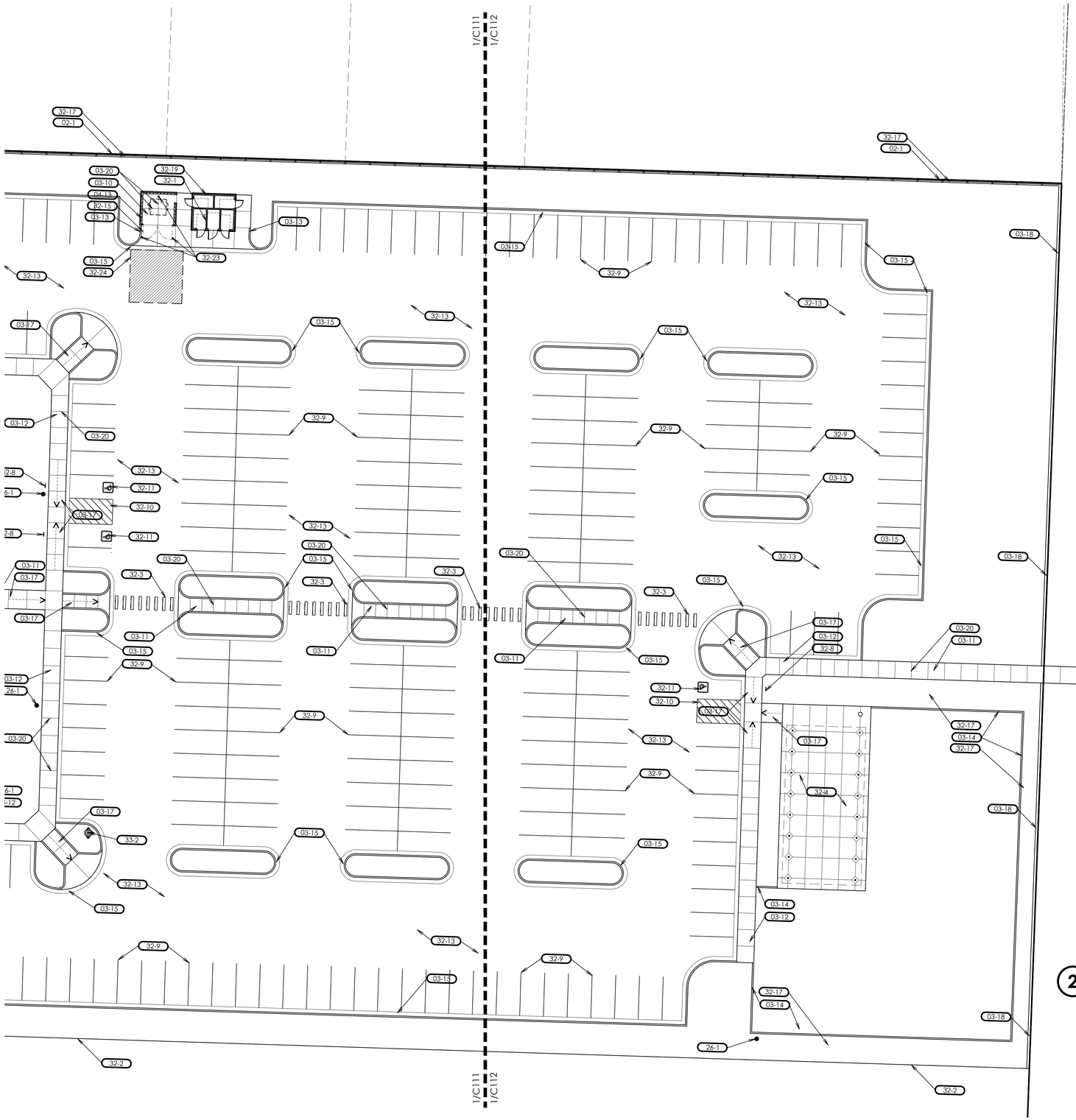

1 Site Architectural Plan - East

Scale: 1" = 20'-0"

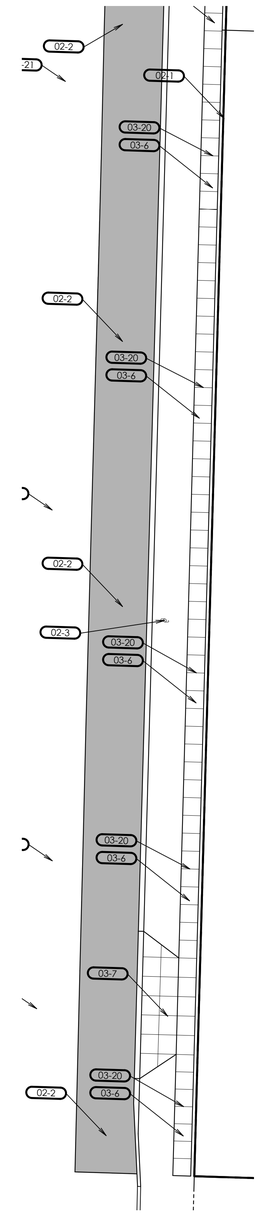

2 Sidewalk and Drive Approach - South

Scale: 1" = 20'-0"

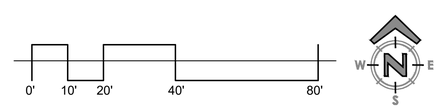

General Notes

A. The contractor shall verify all existing site conditions prior to bidding. Coordinate all work affecting adjacent properties with the respective property owners prior to any demolition or construction work. Repair and replace all existing items on adjacent properties damaged or affected during construction to the satisfaction of the property owner.

B. Refer to ConsLog for Information Available to Bidders, including the geotechnical report.

C. The contractor shall enclose the entire area of work with a temporary fence and maintain a safe pedestrian route for all users of the site throughout construction.

D. For the overexcavation and fill detail see F/C503. for overexcavation and fill notes. See C504 for unit pricing notes required to be turned in at bidding. See C504.

E. Refer to the Specifications for required locations of concrete control joints and expansion joints. Submit a proposed control joint and expansion joint plan to the Architect for approval prior to installation of site concrete.

F. The new building and parking lot are parallel or perpendicular to north property line.

G. The contractor shall install all components of the building and site to meet accessibility standards as shown in 2017 ICC A117.1.

Keyed Notes

02-1 Existing property line. See survey.
02-2 Saw cut 2 feet from edge of asphalt for a clean cut.
02-3 Existing light pole to remain.
02-21 Existing street paving to remain. See site survey.
02-23 Existing manhole to remain.
03-6 Install new city sidewalk per city standards.
03-7 New concrete drive approach per city standards. Reinforce as required by the city.
03-8 Align sidewalk with building foundation wall.
03-9 Building or stair landing. 2% slope maximum.
03-10 Concrete pad at dumpster and in front of dumpster. See 1/C503.
03-11 New concrete sidewalk. See A & H/C501. Typical.
03-12 New integral sidewalk, curb, and gutter. See B/C501. See Grading and Drainage Plan for infall / outfall of gutter.
03-13 Transition height of curb from full height to even with sidewalk and gutter in 5'-0". See E/C501.
03-14 New concrete mow strip. Typical. See K/C501.
03-15 New concrete curb & gutter - typical. See typical details C501 & infall / outfall notation on the Grading & Drainage Site Plans.
03-16 New curb ramp. See grading and drainage plan.
03-17 Sloped section of concrete sidewalk at <5% slope. See grading plan for exact slope.
03-18 New concrete mow strip. Typical. See E/C504
03-20 New control joint in concrete flatwork. See H/C501.
04-12 Mechanical enclosure wall. See C and D/C504.
04-13 Dumpster enclosure wall. See 1/C503.
05-13 New stainless steel bike rack. See L/C501.
10-37 New knox box 3200 series recessed in brick (verify type and location with fire department).
21-2 New fire department connection with locking knox plugs - model 3050 or 3043 (verify with fire department).
23-9 New mechanical equipment. See Mechanical Sheets.
26-1 New pole light and concrete base. See D/C503 and electrical sheets.
26-2 New concrete transformer pad and CT can per power company requirements. See Electrical Sheets.
28-2 New fire alarm control panel location. See A101 and electrical sheets.
32-1 New irrigation controller. See landscape sheets.
32-2 Landscape metal edge.
32-3 New painted crosswalk.
32-4 New pavilion, see Sheets C811, C812, C813, and C814.
32-5 New Nyloplast area drain or yard drain box. See C/C502 and Grading and Drainage Plan.
32-6 New curb inlet box. See Site Details and Grading and Drainage Plan.
32-7 New roof drain box at downspout. See utility sheets and C/C502. Typical.
32-8 New accessible parking sign. See A/C502.
32-9 New painted parking lines. Parking lines shall be 4" wide. Typical.
32-10 New accessible parking access aisle. Paint lines shall be 4" wide at a 45° angle and 2'-0" spacing.
32-11 New blue & white painted accessible parking symbol.
32-13 New asphalt paving - typical. See F/C501 and overexcavation and fill notes.
32-15 6'-0" tall steel dumpster gates. See 1/C503.
32-17 New 6'-0" tall black vinyl coated post and rails. Black vinyl coated privacy slates. See F/C504.
32-19 New storage building. See C801.
32-20 End of vinyl fence.
32-23 Bollard. See B/C502.
32-24 (2) 3" layers of asphalt over 14" aggregate base in shaded area.
33-1 New gas meter per utility company requirements. See utility plan and plumbing sheets.
33-2 New fire hydrant and valve per city standards. See civil sheets.
33-3 Sewer cleanout. See civil sheets.
33-6 New irrigation water meter per city and water district standards. Coordinate with the Utility Plan.

bhd ARCHITECTS
www.bhdarchitects.com
Phone 801.571.0010
Fax 801.571.0303
Toll Free 888.571.0010
65 East Wadsworth Park Drive
Suite 205 Draper, Utah 84020

LICENSED ARCHITECT
Late
Theodore
Harris
6278-0301
23 MAY 2025
STATE OF UTAH

THE CHURCH OF
JESUS CHRIST
OF LATTER-DAY SAINTS

Nibley 6 &
Nibley UT West Stake

Approx. 3410 South 1200 West Nibley, Utah
41.670829, -111.860772

Date: 29 May 2025
BHD #: 2403
County Parcel: 03.050.0016
Plan Series: Heritage 24
Owner #: 514-4728

Drawing Issue and Revision Schedule

#	Date	Description
1	29 May 2025	Bid Documents

Site Architectural Plan - East

C112

Printed: 29 May 2025 11:59 AM

General Notes

A. Dimensions to buildings are to the footprint.

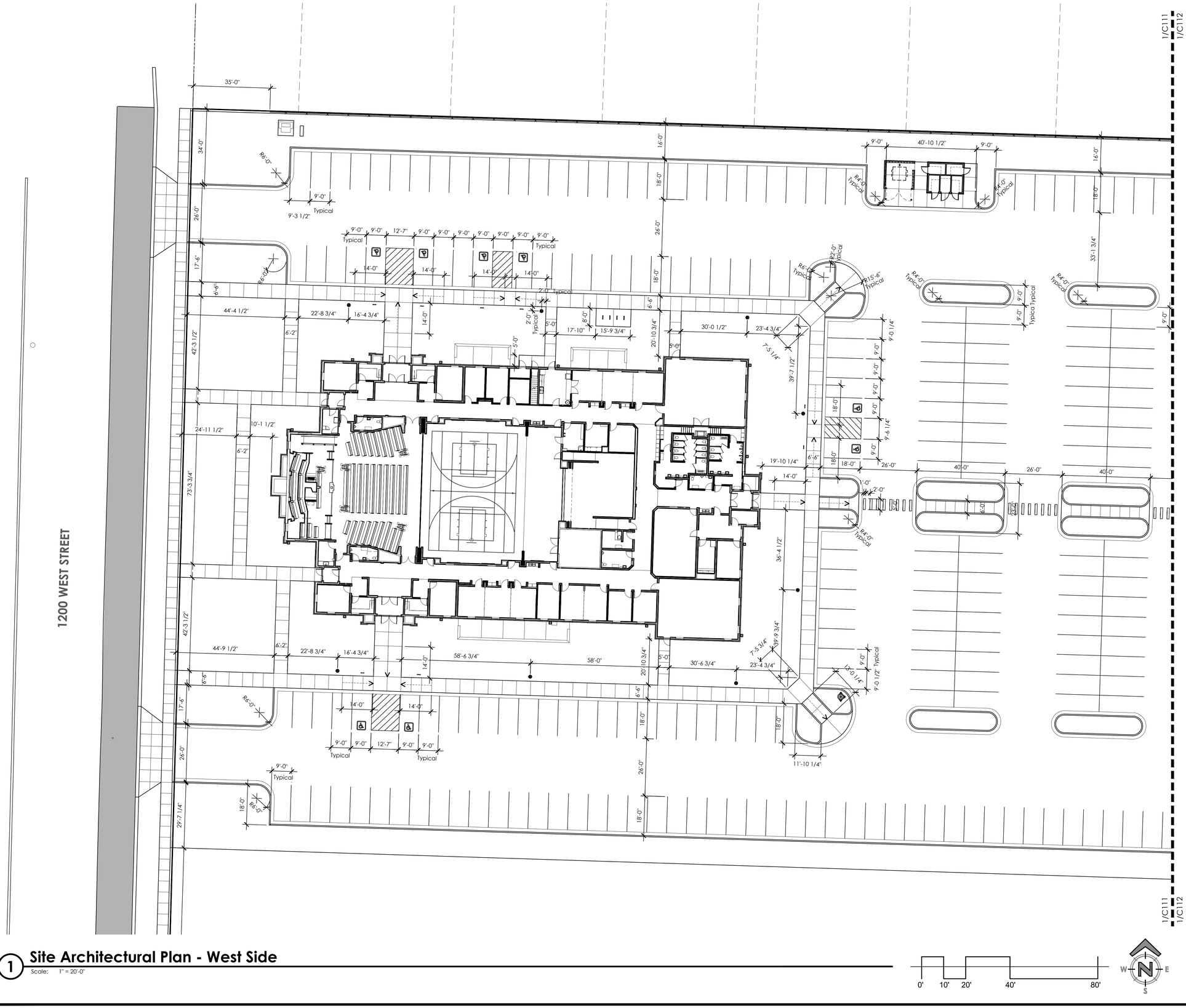

1 Site Architectural Plan - West Side

Scale: 1" = 20'-0"

0' 10' 20' 40' 80'

N

bhd ARCHITECTS
www.bhdarchitects.com
Phone 801.571.0010
Fax 801.571.0303
Toll Free 888.571.0010
65 East Wadsworth Park Drive
Suite 205 Draper, Utah 84020

LICENSED ARCHITECT
Late Theodore Harris
6278-0301
29 MAY 2025
STATE OF UTAH

THE CHURCH OF JESUS CHRIST OF LATTER-DAY SAINTS

Nibley 6 & Nibley UT West Stake

Approx. 3410 South 1200 West, Nibley, Utah
41.672809, -111.860775

BHD #: 2403
County Parcel: 03:050:0016
Plan Series: Heritage 24
Owner #: 514-4728
Date: 29 May 2025

Drawing Issue and Revision Schedule

#	Date	Description
1	29 May 2025	Bid Documents

Site Dimension Plan - West Side

C113

Printed: 29 May 2025 11:59 AM

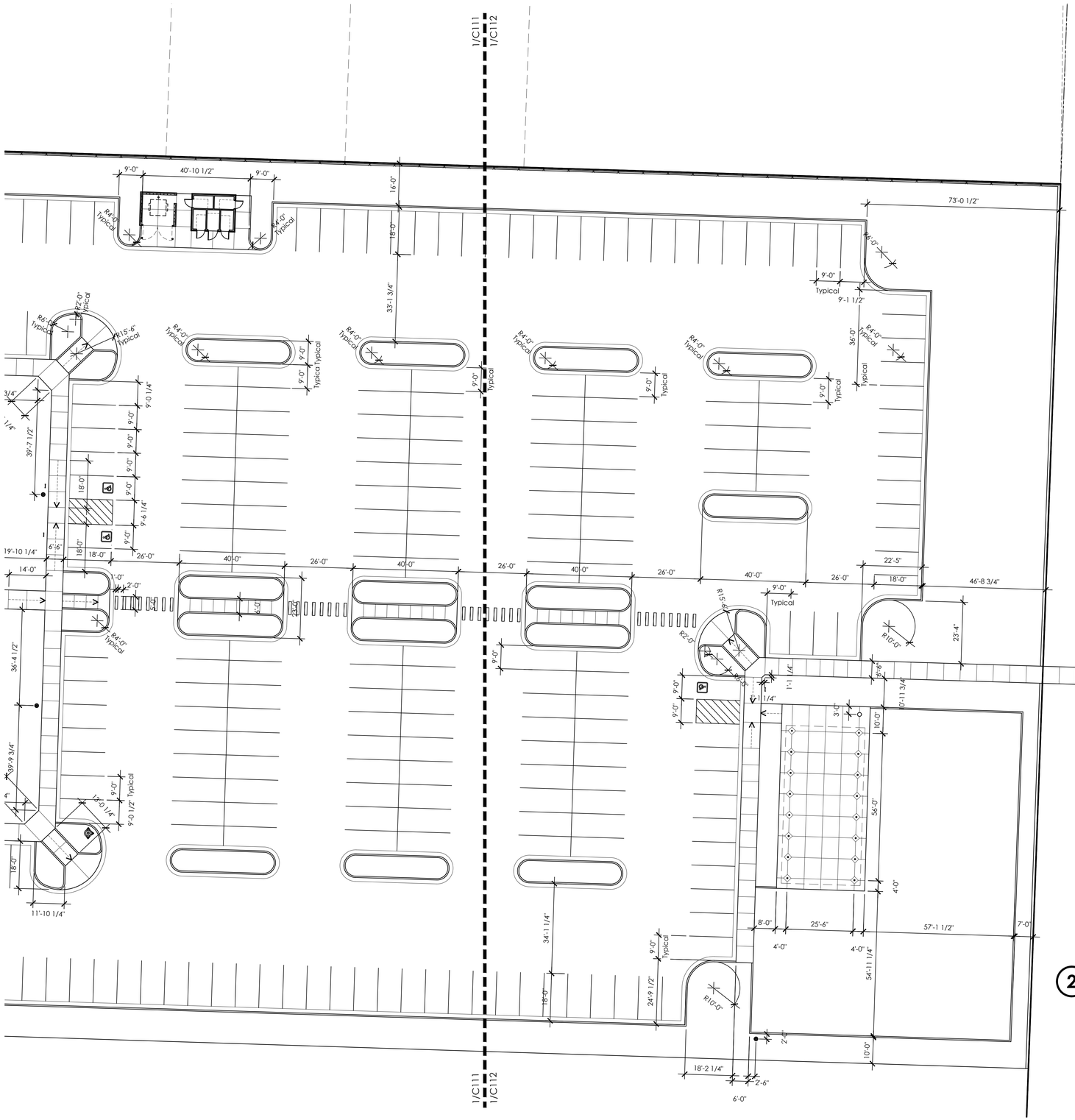

1 Site Architectural Plan - East

Scale: 1" = 20'-0"

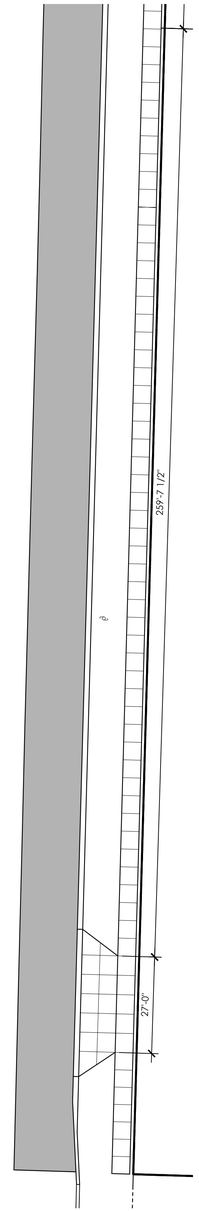

2 Sidewalk and Drive Approach - South

Scale: 1" = 20'-0"

0' 10' 20' 40' 80'

W E S

General Notes

A. Dimensions to buildings are to the foundation.

bhd ARCHITECTS
www.bhdarchitects.com
Phone 801.571.0010
Fax 801.571.0303
Toll Free 888.571.0010
65 East Wadsworth Park Drive
Suite 205 Draper, Utah 84020

LICENSED ARCHITECT
Lafe Theodore Harris
29 May 2025
6928898-0301
STATE OF UTAH

THE CHURCH OF
JESUS CHRIST
OF LATTER-DAY SAINTS

Nibley 6 &
Nibley UT West Stake

Approx. 3410 South 1200 West, Nibley, Utah
41.670809, -111.860775

Date:	BHD #:	County Parcel:	Plan Series:	Owner #:
29 May 2025	2403	03:050:0016	Heritage 24	514-4728

Drawing Issue and Revision Schedule

#	Date	Description
1	29 May 2025	Bid Documents

Site Dimension Plan - East

C114

Printed: 29 May 2025 12:00 PM

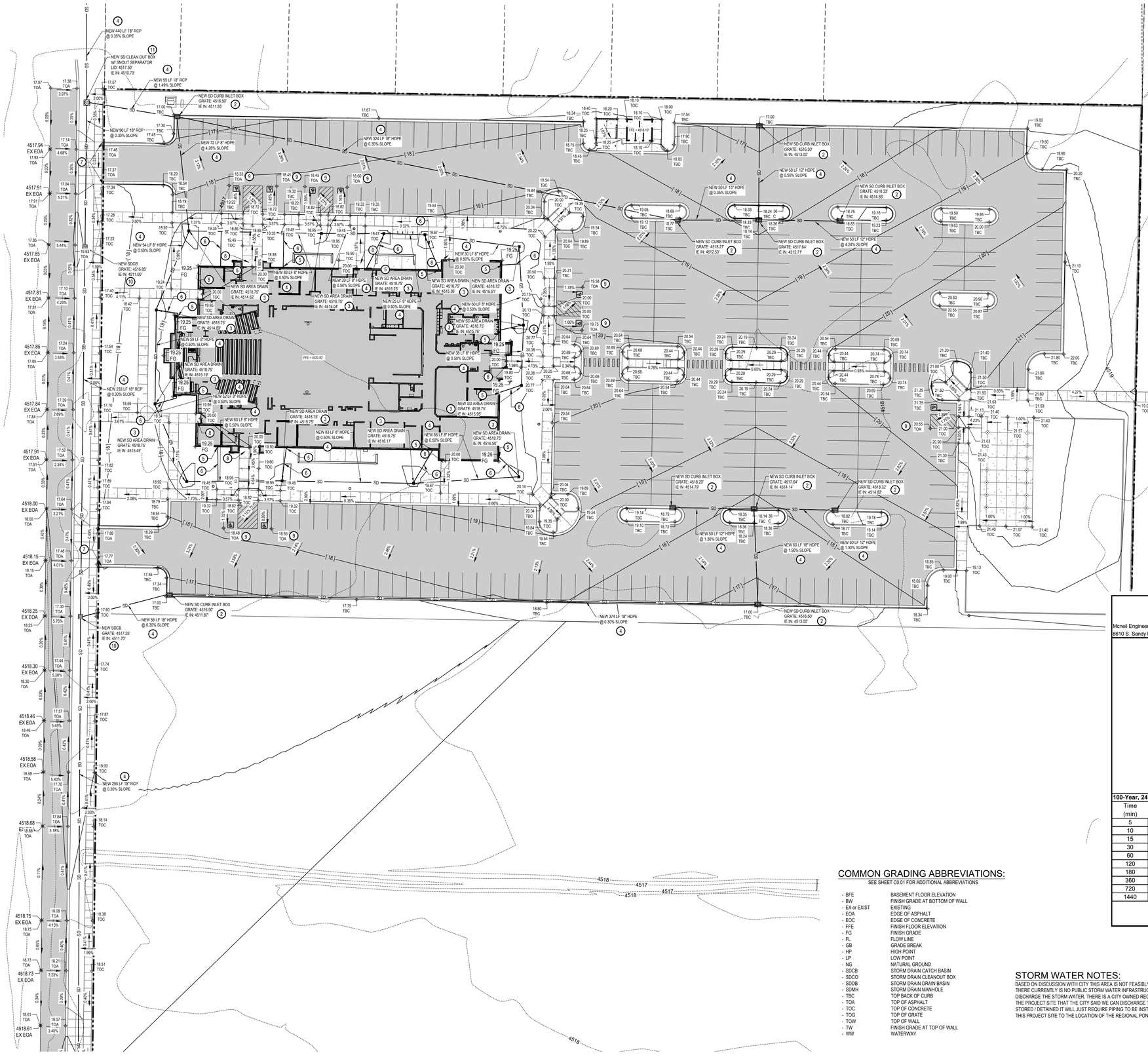

NORTH

SCALE: 1" = 30'

0 15' 30' 60' 90'

GENERAL NOTES:

SITE GRADING SHALL BE PERFORMED IN ACCORDANCE WITH THESE PLANS AND SPECIFICATIONS. THE CONTRACTOR SHALL BE RESPONSIBLE FOR REMOVING AND REPLACING ALL SOFT, YIELDING OR UNSUITABLE MATERIALS AND REPLACING WITH SUITABLE MATERIALS. CONTRACTOR SHALL SUBMIT A COMPACTION REPORT PREPARED BY A QUALIFIED REGISTERED SOILS ENGINEER, VERIFYING THAT ALL FILLED AREAS AND SUBGRADE AREAS WITHIN THE BUILDING PAD AREA AND AREAS TO BE PAVED, HAVE BEEN COMPACTED IN ACCORDANCE WITH THESE PLANS & SPECS.

THE CONTRACTOR IS TO USE BEST MANAGEMENT PRACTICES FOR PROVIDING EROSION CONTROL FOR CONSTRUCTION OF THIS PROJECT. SPECIFIC DETAILS SHOWN ON SHEET C171 SHALL BE USED IN COMBINATION WITH OTHER ACCEPTED LOCAL PRACTICES.

EXISTING UNDERGROUND UTILITIES AND IMPROVEMENTS ARE SHOWN IN THEIR APPROXIMATE LOCATIONS BASED UPON RECORD INFORMATION AVAILABLE AT THE TIME OF PREPARATION OF PLANS. LOCATIONS MAY NOT HAVE BEEN VERIFIED IN THE FIELD AND NO GUARANTEE IS MADE AS TO ACCURACY OR COMPLETENESS OF THE INFORMATION SHOWN. IT SHALL BE RESPONSIBILITY OF THE CONTRACTOR TO DETERMINE THE EXISTENCE AND LOCATION OF THOSE UTILITIES SHOWN ON THESE PLANS OR INDICATED IN THE FIELD BY LOCATING SERVICES. ANY ADDITIONAL COSTS INCURRED AS A RESULT OF CONTRACTORS FAILURE TO VERIFY LOCATIONS OF EXISTING UTILITIES PRIOR TO BEGINNING OF CONSTRUCTION IN THEIR VICINITY SHALL BE BORNE BY THE CONTRACTOR AND ASSUMED INCLUDED IN THE CONTRACT.

KEYED NOTES:

PROVIDE, INSTALL AND/OR CONSTRUCT THE FOLLOWING PER THE SPECIFICATIONS GIVEN OR REFERENCED AND THE DETAILS NOTED AND AS SHOWN ON THE CONSTRUCTION DRAWINGS:

1. GRADE SITE TO ELEVATIONS AND CONTOURS SHOWN ON PLAN.
2. STORM DRAIN CURB INLET BOX WITH HEAVY DUTY BICYCLE SAFE GRATE, PER DETAIL 'M', SEE SHEET C501.
3. 12" SQUARE SECURABLE NYLOPLAST YARD DRAIN, SEE SITE DETAIL SHEETS.
4. STORM DRAIN PIPE. SEE PLAN FOR LENGTH, SIZE, TYPE AND SLOPE. SEE APWA PLANS NO. 381 & 382 FOR TRENCHING DETAIL.
5. ROOF DRAIN DOWNSPOUT LOCATION. DOWNSPOUT TO BE PER SITE DETAIL SHEETS.
6. 6" HDPE PIPE FROM ROOF DRAIN CONNECTION. SLOPE PIPE AT 0.50% MINIMUM FROM CONNECTION, SEE SITE DETAIL SHEETS.
7. TAPER LAST 5' OF CURB TO MATCH SIDEWALK HEIGHT, SEE SITE DETAIL SHEETS.
8. LANDING AREAS TO HAVE 2% MAXIMUM SLOPE AWAY FROM BUILDING
9. ADA PARKING STALL, TOA (TOP OF ASPHALT) SPOT GRADES ARE TO BE STAKED TO ENSURE SLOPE WITHIN ADA PARKING STALL REMAINS UNDER 2.0% MAX. SLOPE.
10. STORM DRAIN CATCH BASIN BOX WITH HEAVY DUTY BICYCLE SAFE GRATE, SEE DETAILS 'H' AND 'J', SHEET C521.
11. INSTALL SNOUT SEPARATOR IN CLEANOUT BOX. INSTALL SNOUT OVER THE DISCHARGE PIPE PER MANUFACTURERS RECOMMENDATIONS, SEE SNOUT DETAIL 'D', SHEET C521.

COMMON GRADING ABBREVIATIONS:

SEE SHEET C0.01 FOR ADDITIONAL ABBREVIATIONS

- BFE	BASEMENT FLOOR ELEVATION
- BW	FINISH GRADE AT BOTTOM OF WALL
- EX or EXIST	EXISTING
- EOA	EDGE OF ASPHALT
- EOC	EDGE OF CONCRETE
- FFE	FINISH FLOOR ELEVATION
- FG	FINISH GRADE
- FL	FLOW LINE
- GB	GRADE BREAK
- HP	HIGH POINT
- LP	LOW POINT
- NG	NATURAL GROUND
- SDCB	STORM DRAIN CATCH BASIN
- SDCO	STORM DRAIN CLEANOUT BOX
- SDDB	STORM DRAIN DRAIN BASIN
- SDMH	STORM DRAIN MANHOLE
- TBC	TOP BACK OF CURB
- TOA	TOP OF ASPHALT
- TOC	TOP OF CONCRETE
- TOG	TOP OF GRATE
- TOW	TOP OF WALL
- TW	FINISH GRADE AT TOP OF WALL
- WW	WATERWAY

STORM WATER NOTES:

BASED ON DISCUSSION WITH CITY THIS AREA IS NOT FEASIBLY FOR RETENTION / INFILTRATION. THERE CURRENTLY IS NO PUBLIC STORM WATER INFRASTRUCTURE SYSTEM SET UP IN WHICH TO DISCHARGE THE STORM WATER. THERE IS A CITY OWNED REGIONAL POND TO THE NORTHWEST OF THE PROJECT SITE THAT THE CITY SAID WE CAN DISCHARGE TO FOR THE STORM WATER TO BE STORED / DETAINED IT WILL JUST REQUIRE PIPING TO BE INSTALLED TO CONVEY WATER FROM THIS PROJECT SITE TO THE LOCATION OF THE REGIONAL POND.

Blue Stakes of UTAH 811 Bluestakes.org

NOTICE!

THE CONTRACTOR SHALL BE RESPONSIBLE FOR THE LOCATION, PROTECTION, AND RESTORATION OF ALL BURIED OR ABOVE GROUND UTILITIES, SHOWN OR NOT SHOWN ON THE PLANS.

Mcneil Engineering
8610 S. Sandy Pkwy, Sandy, UT

STORM RUNOFF
CALCULATION SHEET
Project No.
25333

Title :	Nibley 6 and Nibley West St		
Scope :	Site Drainage Design		
Engineer :	DJC	Check:	DJC
Authority :	Nibley City	Rev. No.:	1

Design Philosophy:
The storm water runoff from the project site will sheet flow to a series of catch basins and inlet boxes where it will be collected and conveyed by an underground pipe system to a outlet structure which will allow the water to be discharged from the project site and convey it to a city owned regional detention pond to the northeast of the project site. Storm water will be detained in that regional pond so it will be allowed to be discharged from the project site unmetered. The calculations below show the runoff water from the 100 yr 24 hr storm to see how much storage in the regional pond is required for this project site.

Area Identification	(A)		Runoff Coefficient (C)		(C*A)
Paved	132,250 sf	(3.04 ac)	0.85	=	112,413 sf
Roof Area	24,000 sf	(0.55 ac)	0.90	=	21,600 sf
Landscaped	66,385 sf	(1.52 ac)	0.12	=	7,966 sf
Total	222,635 sf	(5.11 ac)	0.64 (ave)		141,979 sf

100-Year, 24-Hour Storm:

Time (min)	Rate (in/hr)	Rainfall (Inches)	Q in (cfs)	Add'l Q in (cfs)	Total Q in (cfs)	Q out (cfs)	Storage (cf)
5	5.59	0.466	18.38	0.00	18.38	0.00	5,514
10	4.25	0.708	13.96	0.00	13.96	0.00	8,377
15	3.51	0.878	11.54	0.00	11.54	0.00	10,388
30	2.36	1.180	7.76	0.00	7.76	0.00	13,961
60	1.46	1.460	4.80	0.00	4.80	0.00	17,274
120	0.83	1.660	2.73	0.00	2.73	0.00	19,640
180	0.59	1.770	1.94	0.00	1.94	0.00	20,942
360	0.35	2.090	1.14	0.00	1.14	0.00	24,728
720	0.22	2.580	0.71	0.00	0.71	0.00	30,525
1440	0.13	3.130	0.43	0.00	0.43	0.00	37,033

bhd ARCHITECTS
www.bhdarchitects.com
Phone 801.571.0010
Fax 801.571.0303
Toll Free 888.571.0010
65 East Wadsworth Park Drive
Suite 205 Draper, Utah 84020

PROFESSIONAL ENGINEER 05-29-25 No. 11989925-2202 DANIEL J. CANNING STATE OF UTAH

McNEIL ENGINEERING
9618 South Sandy Parkway, Suite 200
Sandy, Utah 84070
801.255.7700 mcneilengineering.com

PROJECT NO: 25333

THE CHURCH OF JESUS CHRIST OF LATTER-DAY SAINTS

Nibley 6 & Nibley UT West Stake

Approx. 3410 South 1200 West, Nibley, Utah
41.658697, -111.864775

Owner #: 514-4728
Plan Series: Heritage 24
County Parcel: 03:050:0016
BHD #: 2403
Date: 29 May 2025

Drawing Issue and Revision Schedule

#	Date	Description
1	29 May 2025	Bid Documents

Grading and Drainage Plan

C121

Printed: 29 May 2025 12:19 PM

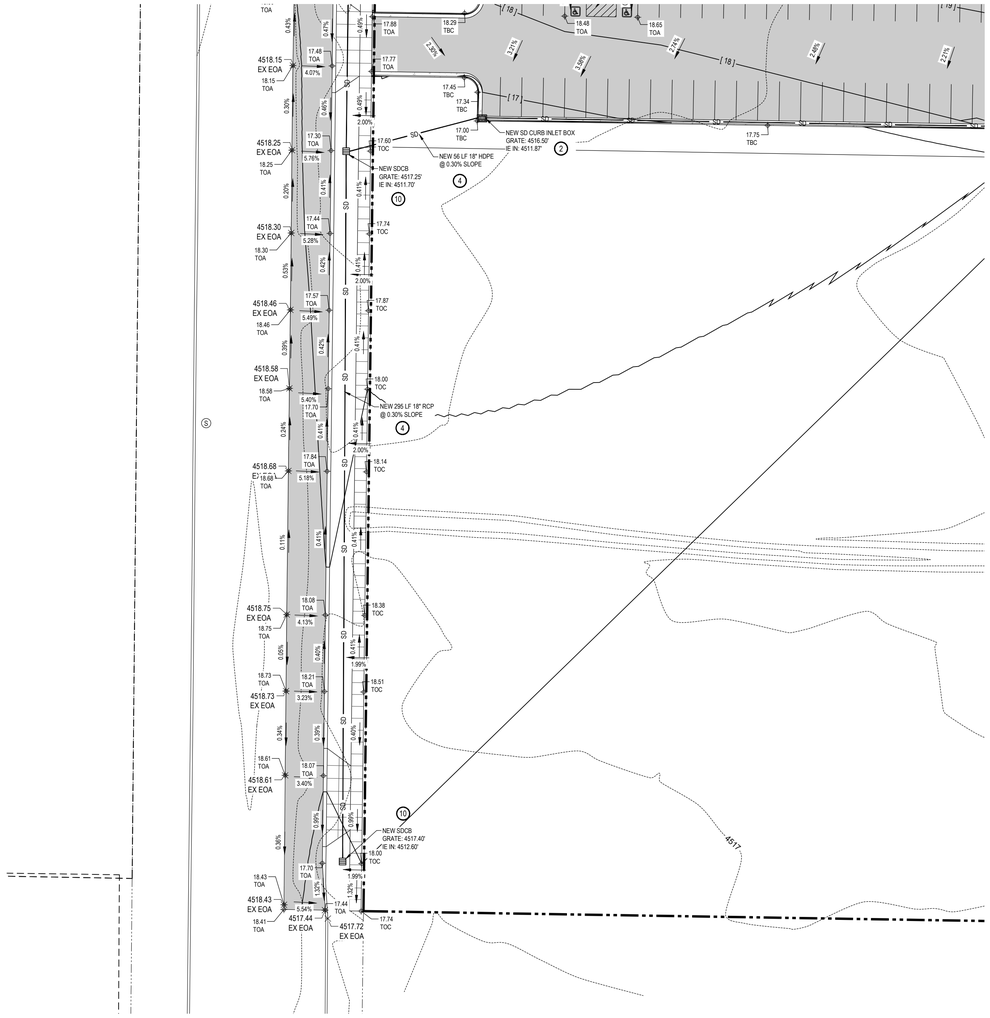

NORTH

SCALE: 1" = 30'

0 15' 30' 60' 90'

GENERAL NOTES:

SITE GRADING SHALL BE PERFORMED IN ACCORDANCE WITH THESE PLANS AND SPECIFICATIONS. THE CONTRACTOR SHALL BE RESPONSIBLE FOR REMOVING AND REPLACING ALL SOFT, YIELDING OR UNSUITABLE MATERIALS AND REPLACING WITH SUITABLE MATERIALS. CONTRACTOR SHALL SUBMIT A COMPACTION REPORT PREPARED BY A QUALIFIED REGISTERED SOILS ENGINEER, VERIFYING THAT ALL FILLED AREAS AND SUBGRADE AREAS WITHIN THE BUILDING PAD AREA AND AREAS TO BE PAVED, HAVE BEEN COMPACTED IN ACCORDANCE WITH THESE PLANS & SPECS.

THE CONTRACTOR IS TO USE BEST MANAGEMENT PRACTICES FOR PROVIDING EROSION CONTROL FOR CONSTRUCTION OF THIS PROJECT. SPECIFIC DETAILS SHOWN ON SHEET C171 SHALL BE USED IN COMBINATION WITH OTHER ACCEPTED LOCAL PRACTICES.

EXISTING UNDERGROUND UTILITIES AND IMPROVEMENTS ARE SHOWN IN THEIR APPROXIMATE LOCATIONS BASED UPON RECORD INFORMATION AVAILABLE AT THE TIME OF PREPARATION OF PLANS. LOCATIONS MAY NOT HAVE BEEN VERIFIED IN THE FIELD AND NO GUARANTEE IS MADE AS TO ACCURACY OR COMPLETENESS OF THE INFORMATION SHOWN. IT SHALL BE RESPONSIBILITY OF THE CONTRACTOR TO DETERMINE THE EXISTENCE AND LOCATION OF THOSE UTILITIES SHOWN ON THESE PLANS OR INDICATED IN THE FIELD BY LOCATING SERVICES. ANY ADDITIONAL COSTS INCURRED AS A RESULT OF CONTRACTOR'S FAILURE TO VERIFY LOCATIONS OF EXISTING UTILITIES PRIOR TO BEGINNING OF CONSTRUCTION IN THEIR VICINITY SHALL BE BORNE BY THE CONTRACTOR AND ASSUMED INCLUDED IN THE CONTRACT.

KEYED NOTES:

PROVIDE, INSTALL AND/OR CONSTRUCT THE FOLLOWING PER THE SPECIFICATIONS GIVEN OR REFERENCED AND THE DETAILS NOTED AND AS SHOWN ON THE CONSTRUCTION DRAWINGS:

1. GRADE SITE TO ELEVATIONS AND CONTOURS SHOWN ON PLAN.
2. STORM DRAIN CURB INLET BOX WITH HEAVY DUTY BICYCLE SAFE GRATE, PER DETAIL 'M', SEE SHEET C501.
3. 12" SQUARE SECURABLE NYLOPLAST YARD DRAIN, SEE SITE DETAIL SHEETS.
4. STORM DRAIN PIPE. SEE PLAN FOR LENGTH, SIZE, TYPE AND SLOPE. SEE APWA PLANS NO. 381 & 382 FOR TRENCHING DETAIL.
5. ROOF DRAIN DOWNSPOUT LOCATION. DOWNSPOUT TO BE PER SITE DETAIL SHEETS.
6. 6" HDPE PIPE FROM ROOF DRAIN CONNECTION. SLOPE PIPE AT 0.50% MINIMUM FROM CONNECTION, SEE SITE DETAIL SHEETS.
7. TAPER LAST 5' OF CURB TO MATCH SIDEWALK HEIGHT, SEE SITE DETAIL SHEETS.
8. LANDING AREAS TO HAVE 2% MAXIMUM SLOPE AWAY FROM BUILDING
9. ADA PARKING STALL, TOA (TOP OF ASPHALT) SPOT GRADES ARE TO BE STAKED TO ENSURE SLOPE WITHIN ADA PARKING STALL REMAINS UNDER 2.0% MAX. SLOPE.
10. STORM DRAIN CATCH BASIN BOX WITH HEAVY DUTY BICYCLE SAFE GRATE, SEE DETAILS 'H' AND 'J', SHEET C521.
10. INSTALL SNOUT SEPARATOR IN CLEANOUT BOX. INSTALL SNOUT OVER THE DISCHARGE PIPE PER MANUFACTURERS RECOMMENDATIONS, SEE SNOUT DETAIL 'D', SHEET C521.

Mcneil Engineering 8610 S. Sandy Pkwy, Sandy, UT	STORM RUNOFF **CALCULATION SHEET** Project No. 25333	Title : Nibley 6 and Nibley West St Scope : Site Drainage Design Engineer : DJC Check: DJC Authority : Nibley City Rev. No.: 1

Design Philosophy:
The storm water runoff from the project site will sheet flow to a series of catch basins and inlet boxes where it will be collected and conveyed by an underground pipe system to a outlet structure which will allow the water to be discharged from the project site and convey it to a city owned regional detention pond to the northeast of the project site. Storm water will be detained in that regional pond so it will be allowed to be discharged from the project site unmetered. The calculations below show the runoff water from the 100 yr 24 hr storm to see how much storage in the regional pond is required for this project site.

	Area Identification (A)		Runoff Coefficient (C)		(C*A)
Paved	132,250 sf	(3.04 ac)	0.85	=	112,413 sf
Roof Area	24,000 sf	(0.55 ac)	0.90	=	21,600 sf
Landscaped	66,385 sf	(1.52 ac)	0.12	=	7,966 sf
Total	222,635 sf	(5.11 ac)	0.64 (ave)		141,979 sf

100-Year, 24-Hour Storm:

Time (min)	Rate (in/hr)	Rainfall (Inches)	Q in (cfs)	Add'l Q in (cfs)	Total Q in (cfs)	Q out (cfs)	Storage (cf)
5	5.59	0.465	18.38	0.00	18.38	0.00	5,514
10	4.25	0.708	13.96	0.00	13.96	0.00	8,377
15	3.51	0.878	11.54	0.00	11.54	0.00	10,388
30	2.36	1.180	7.76	0.00	7.76	0.00	13,961
60	1.46	1.460	4.80	0.00	4.80	0.00	17,274
120	0.83	1.660	2.73	0.00	2.73	0.00	19,640
180	0.59	1.770	1.94	0.00	1.94	0.00	20,942
360	0.35	2.090	1.14	0.00	1.14	0.00	24,728
720	0.22	2.580	0.71	0.00	0.71	0.00	30,525
1440	0.13	3.130	0.43	0.00	0.43	0.00	37,033

COMMON GRADING ABBREVIATIONS:

SEE SHEET C0.01 FOR ADDITIONAL ABBREVIATIONS

- BFE	BASEMENT FLOOR ELEVATION
- BW	FINISH GRADE AT BOTTOM OF WALL
- EX or EXIST	EXISTING
- EOA	EDGE OF ASPHALT
- EOC	EDGE OF CONCRETE
- FFE	FINISH FLOOR ELEVATION
- FG	FINISH GRADE
- FL	FLOW LINE
- GB	GRADE BREAK
- HP	HIGH POINT
- LP	LOW POINT
- NG	NATURAL GROUND
- SDCB	STORM DRAIN CATCH BASIN
- SDCO	STORM DRAIN CLEANOUT BOX
- SDDB	STORM DRAIN DRAIN BASIN
- SDMH	STORM DRAIN MANHOLE
- TBC	TOP BACK OF CURB
- TOA	TOP OF ASPHALT
- TOC	TOP OF CONCRETE
- TOG	TOP OF GRATE
- TOW	TOP OF WALL
- TW	FINISH GRADE AT TOP OF WALL
- WW	WATERWAY

STORM WATER NOTES:

BASED ON DISCUSSION WITH CITY THIS AREA IS NOT FEASIBLY FOR RETENTION / INFILTRATION. THERE CURRENTLY IS NO PUBLIC STORM WATER INFRASTRUCTURE SYSTEM SET UP IN WHICH TO DISCHARGE THE STORM WATER. THERE IS A CITY OWNED REGIONAL POND TO THE NORTHWEST OF THE PROJECT SITE THAT THE CITY SAID WE CAN DISCHARGE TO FOR THE STORM WATER TO BE STORED / DETAINED IT WILL JUST REQUIRE PIPING TO BE INSTALLED TO CONVEY WATER FROM THIS PROJECT SITE TO THE LOCATION OF THE REGIONAL POND.

Blue Stakes of UTAH 811 Bluestakes.org

NOTICE!

THE CONTRACTOR SHALL BE RESPONSIBLE FOR THE LOCATION, PROTECTION, AND RESTORATION OF ALL BURIED OR ABOVE GROUND UTILITIES, SHOWN OR NOT SHOWN ON THE PLANS.

bhd ARCHITECTS
www.bhdarchitects.com
Phone 801.571.0010
Fax 801.571.0303
Toll Free 888.571.0010
65 East Wadsworth Park Drive
Suite 205 Draper, Utah 84020

PROFESSIONAL ENGINEER
05-29-25
No. 10389925-2202
DANIEL J. CANNING
STATE OF UTAH

McNEIL ENGINEERING
8610 South Sandy Parkway, Suite 200
Sandy, Utah 84070
801.255.7700 mcneilengineering.com

PROJECT NO: 25333

THE CHURCH OF JESUS CHRIST OF LATTER-DAY SAINTS

Nibley 6 & Nibley UT West Stake

Approx. 3410 South 1200 West, Nibley, Utah
41.670809, -111.845775

Owner #: 514-4728
Plan Series: Heritage 24
County Parcel: 03:050:0016
BHD #: 2403
Date: 29 May 2025

Drawing Issue and Revision Schedule

#	Date	Description
1	29 May 2025	Bid Documents

Grading and Drainage Plan

C122

Printed: 29 May 2025 10:35 AM

NORTH

SCALE: 1" = 30'

0 15' 30' 60' 90'

GENERAL NOTES:

SITE GRADING SHALL BE PERFORMED IN ACCORDANCE WITH THESE PLANS AND SPECIFICATIONS. THE CONTRACTOR SHALL BE RESPONSIBLE FOR REMOVING AND REPLACING ALL SOFT, YIELDING OR UNSUITABLE MATERIALS AND REPLACING WITH SUITABLE MATERIALS. CONTRACTOR SHALL SUBMIT A COMPACTION REPORT PREPARED BY A QUALIFIED REGISTERED SOILS ENGINEER, VERIFYING THAT ALL FILLED AREAS AND SUBGRADE AREAS WITHIN THE BUILDING PAD AREA AND AREAS TO BE PAVED, HAVE BEEN COMPACTED IN ACCORDANCE WITH THESE PLANS & SPECS.

THE CONTRACTOR IS TO USE BEST MANAGEMENT PRACTICES FOR PROVIDING EROSION CONTROL FOR CONSTRUCTION OF THIS PROJECT. SPECIFIC DETAILS SHOWN ON SHEET C171 SHALL BE USED IN COMBINATION WITH OTHER ACCEPTED LOCAL PRACTICES.

EXISTING UNDERGROUND UTILITIES AND IMPROVEMENTS ARE SHOWN IN THEIR APPROXIMATE LOCATIONS BASED UPON RECORD INFORMATION AVAILABLE AT THE TIME OF PREPARATION OF PLANS. LOCATIONS MAY NOT HAVE BEEN VERIFIED IN THE FIELD AND NO GUARANTEE IS MADE AS TO ACCURACY OR COMPLETENESS OF THE INFORMATION SHOWN. IT SHALL BE RESPONSIBILITY OF THE CONTRACTOR TO DETERMINE THE EXISTENCE AND LOCATION OF THOSE UTILITIES SHOWN ON THESE PLANS OR INDICATED IN THE FIELD BY LOCATING SERVICES. ANY ADDITIONAL COSTS INCURRED AS A RESULT OF CONTRACTOR'S FAILURE TO VERIFY LOCATIONS OF EXISTING UTILITIES PRIOR TO BEGINNING OF CONSTRUCTION IN THEIR VICINITY SHALL BE BORNE BY THE CONTRACTOR AND ASSUMED INCLUDED IN THE CONTRACT.

KEYED NOTES:

PROVIDE, INSTALL AND/OR CONSTRUCT THE FOLLOWING PER THE SPECIFICATIONS GIVEN OR REFERENCED AND THE DETAILS NOTED AND AS SHOWN ON THE CONSTRUCTION DRAWINGS:

1. GRADE SITE TO ELEVATIONS AND CONTOURS SHOWN ON PLAN.
2. STORM DRAIN CURB INLET BOX WITH HEAVY DUTY BICYCLE SAFE GRATE, PER DETAIL 'M', SEE SHEET C501.
3. 12" SQUARE SECURABLE NYLOPLAST YARD DRAIN, SEE SITE DETAIL SHEETS.
4. STORM DRAIN PIPE. SEE PLAN FOR LENGTH, SIZE, TYPE AND SLOPE. SEE APWA PLANS NO. 381 & 382 FOR TRENCHING DETAIL.
5. ROOF DRAIN DOWNSPOUT LOCATION. DOWNSPOUT TO BE PER SITE DETAIL SHEETS.
6. 6" HDPE PIPE FROM ROOF DRAIN CONNECTION. SLOPE PIPE AT 0.50% MINIMUM FROM CONNECTION, SEE SITE DETAIL SHEETS.
7. TAPER LAST 5' OF CURB TO MATCH SIDEWALK HEIGHT, SEE SITE DETAIL SHEETS.
8. LANDING AREAS TO HAVE 2% MAXIMUM SLOPE AWAY FROM BUILDING
9. ADA PARKING STALL, TOA (TOP OF ASPHALT) SPOT GRADES ARE TO BE STAKED TO ENSURE SLOPE WITHIN ADA PARKING STALL REMAINS UNDER 2.0% MAX. SLOPE.
10. STORM DRAIN CATCH BASIN BOX WITH HEAVY DUTY BICYCLE SAFE GRATE, SEE DETAILS 'H' AND 'J', SHEET C521.
11. INSTALL SNOUT SEPARATOR IN CLEANOUT BOX. INSTALL SNOUT OVER THE DISCHARGE PIPE PER MANUFACTURERS RECOMMENDATIONS, SEE SNOUT DETAIL 'D', SHEET C521.

Mcneil Engineering 8610 S. Sandy Pkwy, Sandy, UT	STORM RUNOFF **CALCULATION SHEET** Project No. 25333	Title : Nibley 6 and Nibley West St Scope : Site Drainage Design Engineer : DJC — Check: DJC Authority : Nibley City — Rev. No.: 1

Design Philosophy:
The storm water runoff from the project site will sheet flow to a series of catch basins and inlet boxes where it will be collected and conveyed by an underground pipe system to a outlet structure which will allow the water to be discharged from the project site and convey it to a city owned regional detention pond to the northeast of the project site. Storm water will be detained in that regional pond so it will be allowed to be discharged from the project site unmetered. The calculations below show the runoff water from the 100 yr 24 hr storm to see how much storage in the regional pond is required for this project site.

Area Identification	(A)		Runoff Coefficient (C)		(C*A)
Paved	132,250 sf	(3.04 ac)	0.85	=	112,413 sf
Roof Area	24,000 sf	(0.55 ac)	0.90	=	21,600 sf
Landscaped	66,385 sf	(1.52 ac)	0.12	=	7,966 sf
Total	222,635 sf	(5.11 ac)	0.64 (ave)		141,979 sf

100-Year, 24-Hour Storm:

Time (min)	Rate (in/hr)	Rainfall (Inches)	Q in (cfs)	Add'l Q in (cfs)	Total Q in (cfs)	Q out (cfs)	Storage (cf)
5	5.59	0.466	18.38	0.00	18.38	0.00	5,514
10	4.25	0.708	13.96	0.00	13.96	0.00	8,377
15	3.51	0.878	11.54	0.00	11.54	0.00	10,388
30	2.36	1.180	7.76	0.00	7.76	0.00	13,961
60	1.46	1.460	4.80	0.00	4.80	0.00	17,274
120	0.83	1.660	2.73	0.00	2.73	0.00	19,640
180	0.59	1.770	1.94	0.00	1.94	0.00	20,942
360	0.35	2.090	1.14	0.00	1.14	0.00	24,728
720	0.22	2.580	0.71	0.00	0.71	0.00	30,525
1440	0.13	3.130	0.43	0.00	0.43	0.00	37,033

COMMON GRADING ABBREVIATIONS:

SEE SHEET C0.01 FOR ADDITIONAL ABBREVIATIONS

- BFE — BASEMENT FLOOR ELEVATION
- BW — FINISH GRADE AT BOTTOM OF WALL
- EX or EXIST — EXISTING
- EOA — EDGE OF ASPHALT
- EOC — EDGE OF CONCRETE
- FFE — FINISH FLOOR ELEVATION
- FG — FINISH GRADE
- FL — FLOW LINE
- GB — GRADE BREAK
- HP — HIGH POINT
- LP — LOW POINT
- NG — NATURAL GROUND
- SDCB — STORM DRAIN CATCH BASIN
- SDCO — STORM DRAIN CLEANOUT BOX
- SDDB — STORM DRAIN DRAIN BASIN
- SDMH — STORM DRAIN MANHOLE
- TBC — TOP BACK OF CURB
- TOA — TOP OF ASPHALT
- TOC — TOP OF CONCRETE
- TOG — TOP OF GRATE
- TOW — TOP OF WALL
- TW — FINISH GRADE AT TOP OF WALL
- WW — WATERWAY

STORM WATER NOTES:

BASED ON DISCUSSION WITH CITY THIS AREA IS NOT FEASIBLY FOR RETENTION / INFILTRATION. THERE CURRENTLY IS NO PUBLIC STORM WATER INFRASTRUCTURE SYSTEM SET UP IN WHICH TO DISCHARGE THE STORM WATER. THERE IS A CITY OWNED REGIONAL POND TO THE NORTHWEST OF THE PROJECT SITE THAT THE CITY SAID WE CAN DISCHARGE TO FOR THE STORM WATER TO BE STORED / DETAINED IT WILL JUST REQUIRE PIPING TO BE INSTALLED TO CONVEY WATER FROM THIS PROJECT SITE TO THE LOCATION OF THE REGIONAL POND.

Blue Stakes of UTAH811
Bluestakes.org

NOTICE!

THE CONTRACTOR SHALL BE RESPONSIBLE FOR THE LOCATION, PROTECTION, AND RESTORATION OF ALL BURIED OR ABOVE GROUND UTILITIES, SHOWN OR NOT SHOWN ON THE PLANS.

bhd ARCHITECTS
www.bhdarchitects.com
Phone 801.571.0010
Fax 801.571.0303
Toll Free 888.571.0010
65 East Wadsworth Park Drive
Suite 205 Draper, Utah 84020

PROFESSIONAL ENGINEER 05-29-25 No. 11088925-2202 DANIEL J. CANNING STATE OF UTAH

McNEIL ENGINEERING™
8610 South Sandy Parkway, Suite 200
Sandy, Utah 84070
801.255.7700 mcneilengineering.com
PROJECT NO: 25333

THE CHURCH OF JESUS CHRIST OF LATTER-DAY SAINTS

Nibley 6 & Nibley UT West Stake

Approx. 3410 South 1200 West, Nibley, Utah
41.670809, -111.860775

Date:	BHD #:	County Parcel:	Plan Series:	Owner #:
29 May 2025	2403	03:050:0016	Heritage 24	514-4728

Drawing Issue and Revision Schedule

#	Date	Description
1	29 May 2025	Bid Documents

Grading and Drainage Plan

C123

Printed: 29 May 2025 12:18 PM

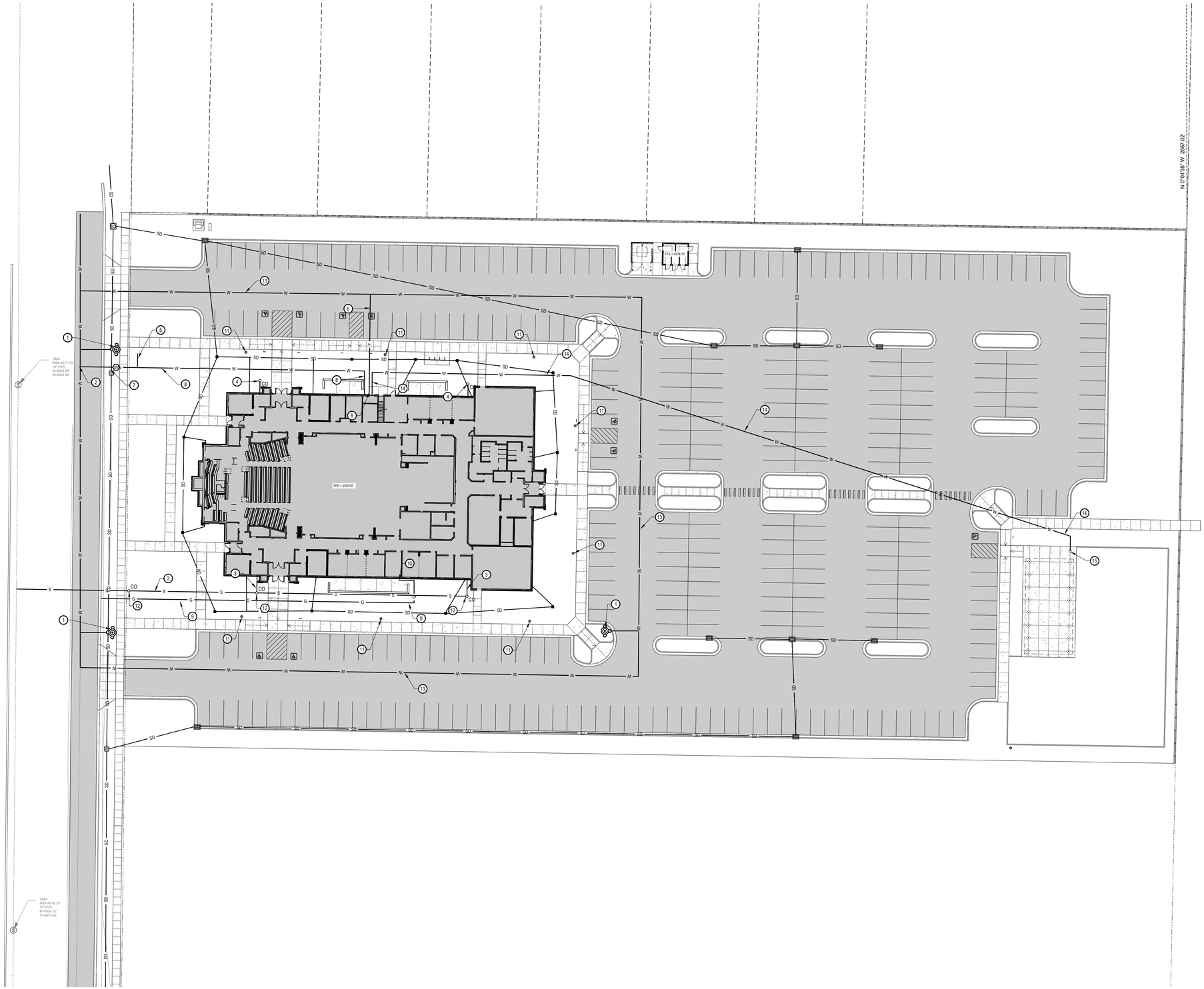

NORTH

SCALE: 1" = 30'

0 15' 30' 60' 90'

GENERAL NOTES:

CONTRACTOR IS TO COORDINATE ALL UTILITIES WITH MECHANICAL DRAWINGS.

ALL NEW WATER CONSTRUCTION TO BE DONE IN ACCORDANCE WITH LOCAL GOVERNING MUNICIPALITY STANDARDS & SPECIFICATIONS.

ALL NEW SANITARY SEWER CONSTRUCTION TO BE DONE IN ACCORDANCE WITH LOCAL GOVERNING MUNICIPALITY STANDARDS & SPECIFICATIONS.

CONTRACTOR SHALL FIELD VERIFY LOCATIONS AND INVERT ELEVATIONS OF EXISTING MANHOLES AND OTHER UTILITIES BEFORE STAKING OR CONSTRUCTING ANY SEWER LINES.

FOUR FEET OF COVER IS REQUIRED OVER ALL SEWER LINES.

MAINTAIN A MINIMUM OF 48 INCHES OF COVER ON ALL WATER LINES.

CONTRACTOR IS TO COORDINATE LOCATIONS OF NEW TELEPHONE SERVICE TO BUILDING WITH CENTURY LINK. A PVC CONDUIT, PLYWOOD BACKBOARD, AND GROUND WIRE IS REQUIRED FOR SERVICE THROUGH PROPERTY, COORDINATE SIZES AND LOCATION WITH CENTURY LINK.

CONTRACTOR IS TO SUBMIT SITE PLAN TO DOMINION ENERGY FOR DESIGN OF GAS LINE SERVICE TO BUILDING. CONTRACTOR TO COORDINATE WITH DOMINION ENERGY FOR CONTRACTOR LIMITS OF WORK VERSUS DOMINION ENERGY LIMITS.

LOCATION OF ALL UNDERGROUND UTILITIES SHOWN ARE APPROXIMATE LOCATIONS. CONTRACTOR IS TO VERIFY CONNECTION POINTS WITH EXISTING UTILITIES. CONTRACTOR IS RESPONSIBLE FOR ANY DAMAGE CAUSED TO EXISTING UTILITIES AND UTILITY STRUCTURE THAT ARE TO REMAIN.

UTILITY ALERT PHONE NUMBERS
- WATER: NIBLEY CITY
- SEWER: NIBLEY CITY
- NATURAL GAS: DOMINION ENERGY
- ELECTRICAL POWER: ROCKY MOUNTAIN POWER
- TELEPHONE: CENTURY LINK

KEYED NOTES:

PROVIDE, INSTALL AND/OR CONSTRUCT THE FOLLOWING PER THE SPECIFICATIONS GIVEN OR REFERENCED AND THE DETAILS NOTED AND AS SHOWN ON THE CONSTRUCTION DRAWINGS:

1. FIRE HYDRANT ASSEMBLY COMPLETE, PER NIBLEY CITY STANDARD DETAIL SEE SHEET C531.
2. CONNECT NEW 1-1/2" TYPE 'K' COPPER WATER SERVICE LINE TO WATER MAIN.
3. 6" PVC SDR-35 SANITARY SEWER LATERAL, INCLUDING ALL FITTINGS. CLEANOUTS AT 100-FOOT MAXIMUM SPACING. SEE NIBLEY CITY STANDARD DETAIL SEE SHEET C531.
4. SEWER CLEANOUT AND 6" PVC SEWER LINE FOR USE IN CLEARING SEWER LINES WITHIN THE BUILDING FROM OUTSIDE
5. INSTALL 1" IRRIGATION STUB AFTER THE CULINARY METER, SEE IRRIGATION PLANS FOR STOP AND WASTE.
6. 6" DIP CLASS 52 FIRE LINE WRAPPED IN AWWA APPROVED POLYETHYLENE ENCASEMENT (POLYWRAP), INCLUDING ALL FITTINGS AND THRUST BLOCKING. SEE NIBLEY CITY REVISED APWA PLAN NO. 561 FOR THRUST BLOCKING, SHEET C531.
7. 2" WATER SERVICE METER SET, PER NIBLEY CITY STANDARD DETAIL SEE SHEET C531.
8. 2" TYPE 'K' COPPER WATER SERVICE LINE, PER NIBLEY CITY STANDARD DETAIL SEE SHEET C531.
9. APPROXIMATE LOCATION OF NEW NATURAL GAS LINE. CONTRACTOR TO COORDINATE SIZE, DESIGN AND INSTALLATION BY DOMINION ENERGY WITH OTHER CONSTRUCTION.
10. APPROXIMATE LOCATION OF NEW NATURAL GAS METER. CONTRACTOR TO COORDINATE SIZE, DESIGN AND INSTALLATION WITH DOMINION ENERGY AND WITH MECHANICAL PLANS.
11. SIDEWALK AREA LIGHT POLE, SEE ELECTRICAL PLANS FOR DETAILS.
12. SANITARY SEWER CLEANOUT, SEE DETAIL 'C', SHEET C521.
13. 8" BLUE PVC C-900 DR-18 WATER LINE FOR FIRE LINE LOOP. INCLUDING ALL FITTINGS AND THRUST BLOCKING. SEE NIBLEY CITY REVISED APWA PLAN NO. 561 FOR THRUST BLOCKING, SHEET C531.
14. 3/4" POLY PIPE WATER LINE FROM PROPOSED BUILDING TO THE PAVILION DRINKING FOUNTAIN. SEE PLUMBING PLANS FOR COORDINATION AND FOR DETAILS.
15. CONTRACTOR TO INSTALL THE OWNER FURNISHED DRINKING FOUNTAIN AT THE PAVILION. TO BE THE RESPONSIBILITY OF THE ON SITE CONTRACTOR TO COORDINATE WITH ARCHITECTURAL AND PLUMBING PLANS AND NOTES AND INSTALL TWO SHUTOFF VALVES, CONTRACTOR ALSO TO INSTALL TWO 18" x 18" DRAIN SUMPS, ONE AT THE FOUNTAIN AND THE OTHER AT THE LOWER SHUTOFF VALVE TO DRAIN THE WATER IN THE LINE RUNNING TO THE DRINKING FOUNTAIN. SEE PLUMBING PLANS FOR DETAILS.

Blue Stakes of UTAH811 Bluestakes.org

NOTICE!

THE CONTRACTOR SHALL BE RESPONSIBLE FOR THE LOCATION, PROTECTION, AND RESTORATION OF ALL BURIED OR ABOVE GROUND UTILITIES, SHOWN OR NOT SHOWN ON THE PLANS.

bhd ARCHITECTS
www.bhdarchitects.com
Phone 801.571.0010
Fax 801.571.0303
Toll Free 888.571.0010
65 East Wadsworth Park Drive
Suite 205 Draper, Utah 84020

PROFESSIONAL ENGINEER
05-29-25
No. 14088225-2202
DANIEL J. CANNING
STATE OF UTAH

McNEIL ENGINEERING
5619 South Sandy Parkway, Suite 200
Sandy, Utah 84070
801.255.7700 mcneilengineering.com

PROJECT NO: 25333

THE CHURCH OF JESUS CHRIST OF LATTER-DAY SAINTS

Nibley 6 & Nibley UT West Stake

Approx. 3410 South 1200 West, Nibley, Utah
41.670809, -111.860775

Date: 29 May 2025
BHD #: 2403
County Parcel: 03:050:0016
Plan Series: Heritage 24
Owner #: 514-4728

Drawing Issue and Revision Schedule

#	Date	Description
1	29 May 2025	Bid Documents

Site Utility Plan

C151

Printed: 29 May 2025 10:36 AM

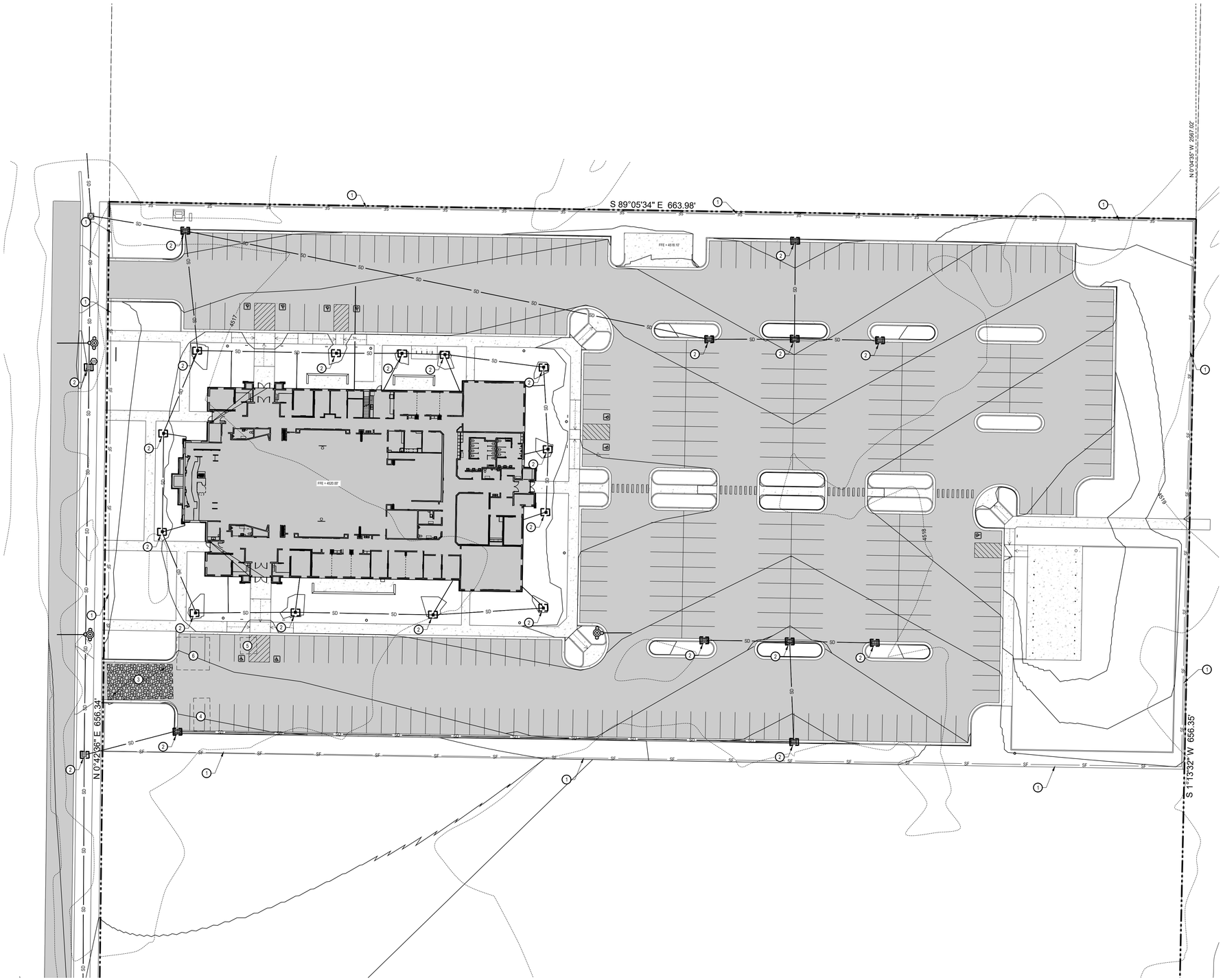

NORTH

SCALE: 1" = 30'

0 15' 30' 60' 90'

GENERAL NOTES:

THE CONTRACTOR IS TO USE BEST MANAGEMENT PRACTICES FOR PROVIDING EROSION CONTROL FOR CONSTRUCTION OF THIS PROJECT. SPECIFIC DETAILS REFERRED TO ON THIS SHEET SHALL BE USED IN COMBINATION WITH OTHER ACCEPTED LOCAL PRACTICES.

ALL MATERIALS AND WORKMANSHIP SHALL CONFORM TO THE LOCAL AGENCY'S EROSION CONTROL STANDARDS AND SPECIFICATIONS AND ALL WORK SHALL BE SUBJECT TO INSPECTION BY THE AGENCY HAVING JURISDICTION. ALSO INSPECTORS WILL HAVE THE RIGHT TO CHANGE THE FACILITIES AS NEEDED.

THE CONTRACTOR SHALL BE RESPONSIBLE FOR FIELD VERIFYING THE LOCATIONS OF ALL EXISTING UTILITIES. IF CONFLICTS OCCUR, THE CONTRACTOR SHALL NOTIFY THE ENGINEER PRIOR TO CONSTRUCTION TO DETERMINE IF ANY FIELD ADJUSTMENTS SHOULD BE MADE.

THE CONTRACTOR SHALL PROVIDE ADEQUATE DUST CONTROL.

WHEN GRADING OPERATIONS HAVE BEEN COMPLETED AND THE DISTURBED GROUND SHALL BE LEFT "OPEN" FOR 30 DAYS OR MORE THE AREA SHALL BE FURROWED PARALLEL TO THE CONTOURS OF THE AREA.

THE CONTRACTOR SHALL MODIFY EROSION CONTROL MEASURES TO ACCOMMODATE PROJECT PLANNING.

MAINTENANCE:

THE OWNER'S REPRESENTATIVE SHALL MAKE ROUTINE CHECKS ON ALL EROSION CONTROL MEASURES TO DETERMINE IF REPAIRS OR SEDIMENT REMOVAL IS NECESSARY. DUE TO CONDITIONS THAT MAY ARISE IN THE FIELD, ADDITIONAL CONTROL MAY BE DETERMINED TO BE NECESSARY.

SILT FENCE BARRIERS SHALL BE INSPECTED IMMEDIATELY AFTER EACH RAINFALL AND AT THE LEAST DAILY DURING PROLONGED RAINFALL.

CLOSE ATTENTION SHALL BE PAID TO THE REPAIR OF DAMAGED SILT FENCES, END RUNS, AND UNDERCUTTING BENEATH SILT FENCING.

NECESSARY REPAIRS TO BARRIERS OR REPLACEMENT OF SILT FENCING SHALL BE ACCOMPLISHED PROMPTLY.

SEDIMENT DEPOSITS SHOULD BE REMOVED AFTER EACH RAINFALL. THEY MUST BE REMOVED WHEN THE LEVEL OF DEPOSITION REACHES APPROXIMATELY ONE-HALF THE HEIGHT OF THE BARRIER.

KEYED NOTES:

PROVIDE, INSTALL AND/OR CONSTRUCT THE FOLLOWING PER THE SPECIFICATIONS GIVEN OR REFERENCED AND THE DETAILS NOTED AND AS SHOWN ON THE CONSTRUCTION DRAWINGS:

1. SILT FENCE AS SHOWN ON PLAN. SEE DETAIL 'C3', SHEET C502.
2. INLET PROTECTION AROUND EXISTING OR NEW STORM DRAIN CATCH BASINS OR CURB INLETS. SEE DETAIL 'A1', SHEET C502.
3. TEMPORARY CONSTRUCTION ENTRANCE. SEE DETAIL 'C1', SHEET C502. LOCATION SHOWN IS SUGGESTIVE. CONTRACTOR TO RELOCATE AS NEEDED.
4. CONCRETE WASHOUT AREA. SEE DETAIL 'A3', SHEET C502. LOCATION SHOWN IS SUGGESTIVE. CONTRACTOR TO RELOCATE AS NEEDED.
5. PORTABLE TOILET. SEE DETAIL 'C5', SHEET C502. LOCATION SHOWN IS SUGGESTIVE. CONTRACTOR TO RELOCATE AS NEEDED.
6. TOPSOIL STOCK PILE AREA. MAINTAIN SILT FENCE AROUND PERIMETER AT ALL TIMES. CONTROL DUST FROM PILE BY EITHER COVERING OR KEEPING MOIST. LOCATION SHOWN IS SUGGESTIVE. CONTRACTOR TO RELOCATE AS NEEDED.

Blue Stakes of UTAH 811 Bluestakes.org

NOTICE!

THE CONTRACTOR SHALL BE RESPONSIBLE FOR THE LOCATION, PROTECTION, AND RESTORATION OF ALL BURIED OR ABOVE GROUND UTILITIES, SHOWN OR NOT SHOWN ON THE PLANS.

bhd ARCHITECTS
www.bhdarchitects.com
Phone 801.571.0010
Fax 801.571.0303
Toll Free 888.571.0010
65 East Wadsworth Park Drive
Suite 205 Draper, Utah 84020

PROFESSIONAL ENGINEER
05-29-25
No. 14989925-2202
DANIEL J. CANNING
STATE OF UTAH

McNEIL ENGINEERING
8619 South Sandy Parkway, Suite 200
Sandy, Utah 84070
801.255.7700 mcneilengineering.com

PROJECT NO: 25333

THE CHURCH OF JESUS CHRIST OF LATTER-DAY SAINTS

Nibley 6 & Nibley UT West Stake

Approx. 3410 South 1200 West, Nibley, Utah
41.670809, -111.860775

Date:	29 May 2025
BHD #:	2403
County Parcel:	03:050:0016
Plan Series:	Heritage 24
Owner #:	514-4728

Drawing Issue and Revision Schedule

#	Date	Description
1	29 May 2025	Bid Documents

Erosion Control Plan

C171

Printed: 29 May 2025 10:35 AM

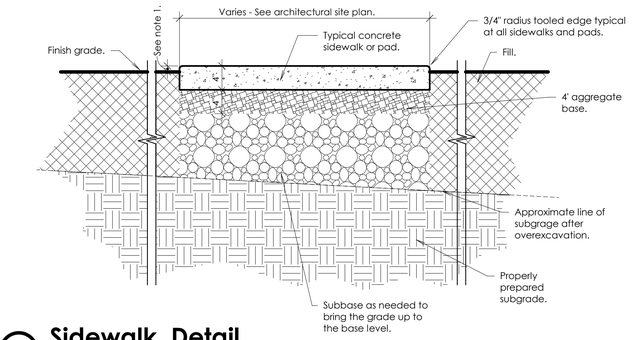

A Sidewalk Detail

Scale: 1" = 1'-0"

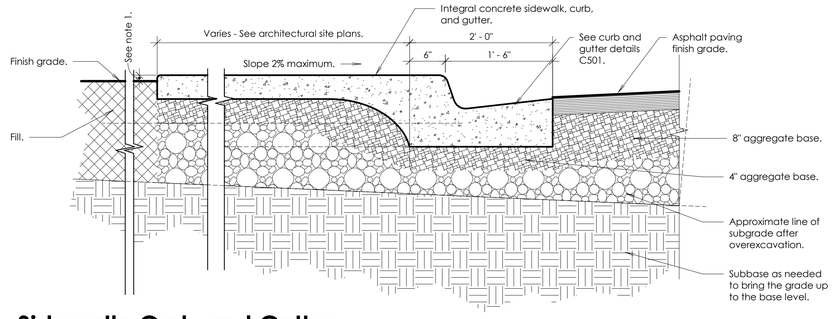

B Sidewalk, Curb and Gutter

Scale: 1" = 1'-0"

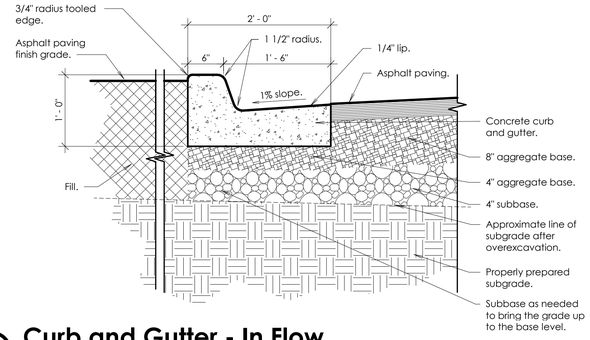

C Curb and Gutter - In Flow

Scale: 1" = 1'-0"

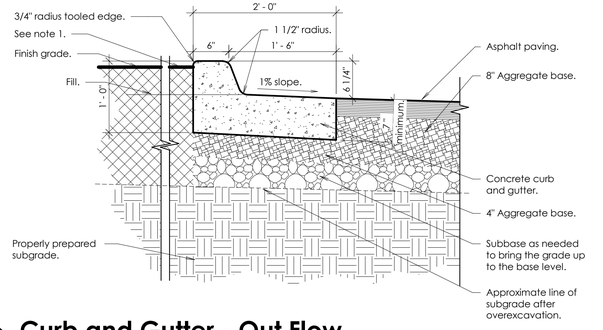

D Curb and Gutter - Out Flow

Scale: 1" = 1'-0"

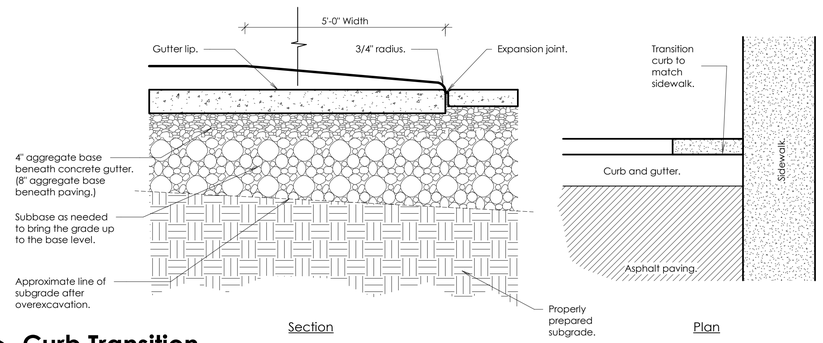

E Curb Transition

Scale: 1" = 1'-0"

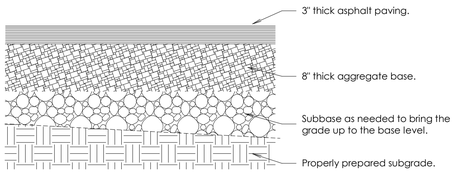

F Asphalt Paving

Scale: 1" = 1'-0"

Notes:
1. Mowstrip shall be cast-in-place and poured using typical weight structural concrete.
2. Contractor shall ensure positive drainage around mowstrips. Do not create a dam effect with placement of mowstrip.
3. Maximum 1/2" width variation.
4. Precisely follow layout as shown on the site architectural plan.

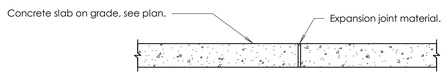

Typical Expansion Joint

(Sidewalk, curb and gutter, mowstrip, apron, flat drainage structures and mechanical enclosures).

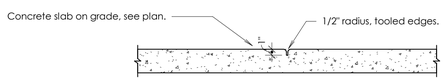

Typical Control Joint

(Sidewalk, curb and gutter, mowstrip, apron, flat drainage structures and mechanical enclosures).

H Expansion and Control Joints

Scale: 1" = 1'-0"

Notes:

1. 1" Prior to seeding, 2" prior to sodding, 4" in planting areas.
2. Expansion joint material shall be recessed 1/4" where sealant is not applied, and 1/2" where sealant is applied.
3. Epoxy-coated reinforcement steel bars shall be used for all concrete reinforcing used for all site concrete elements.

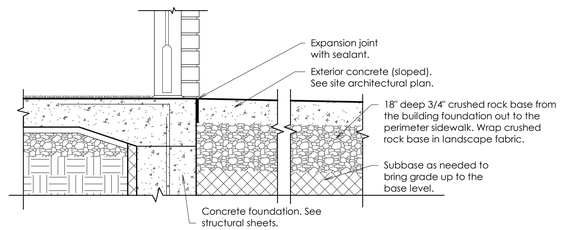

J Typical Entry At Door

Scale: 1" = 1'-0"

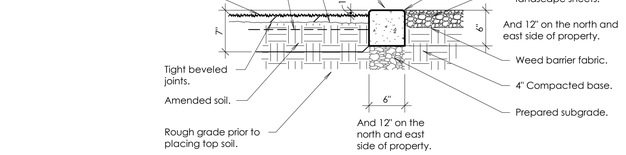

K Concrete Mow Strip

Scale: 1" = 1'-0"

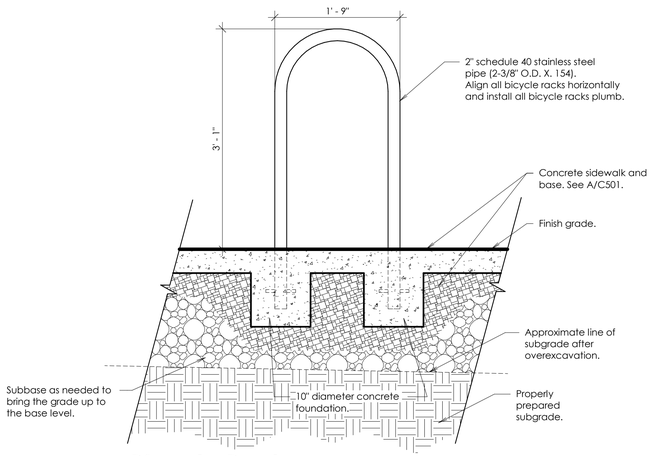

L Bicycle Rack

Scale: 1" = 1'-0"

bhd ARCHITECTS
www.bhdarchitects.com
Phone 801.571.0010
Fax 801.571.0303
Toll Free 888.571.0010
65 East Wadsworth Park Drive
Suite 205 Draper, Utah 84020

LICENSED ARCHITECT Lafe Theodore Harris 23 MAY 2025 6278-6301 STATE OF UTAH

THE CHURCH OF JESUS CHRIST OF LATTER-DAY SAINTS

Nibley 6 & Nibley UT West Stake

Approx. 3410 South 1200 West, Nibley, Utah
41.670809, -111.860775

Owner #: 514-4728
Plan Series: Heritage 24
County Parcel: 03:050:0016
BHD #: 2403
Date: 29 May 2025

Drawing Issue and Revision Schedule

#	Date	Description

Site Details

C501

5/29/2025 12:16:18 PM

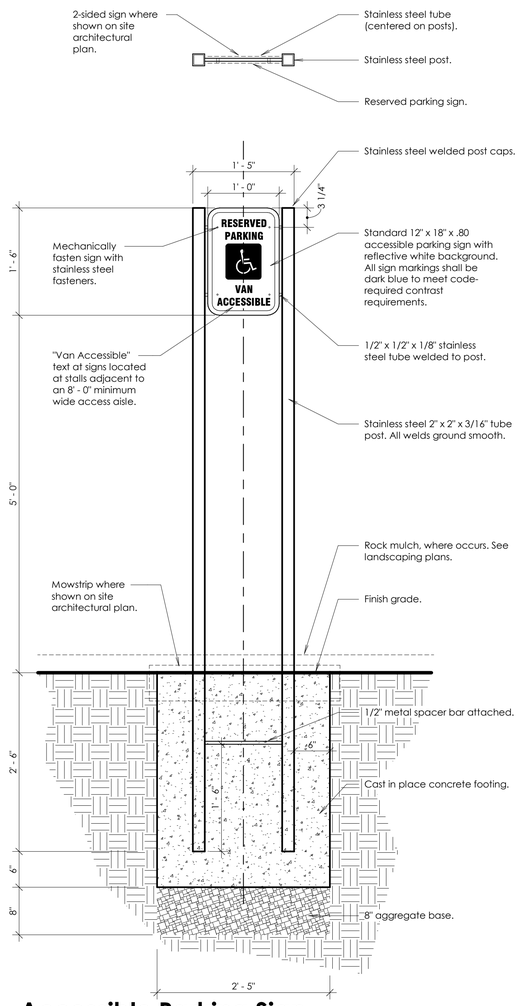

A Accessible Parking Sign

Scale: 1" = 1'-0"

B Bollard Detail

Scale: 1/2" = 1'-0"

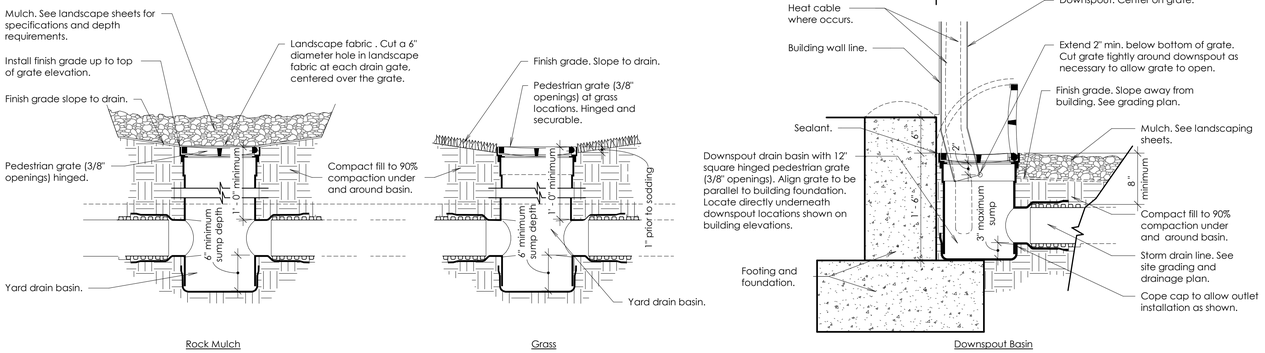

© Drain Basin Detail

Scale: 1" = 1'-0"

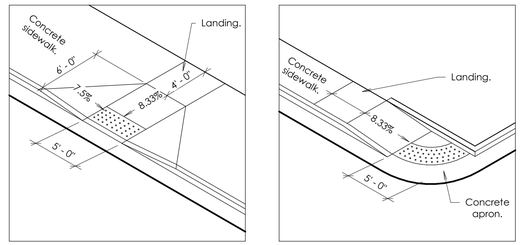

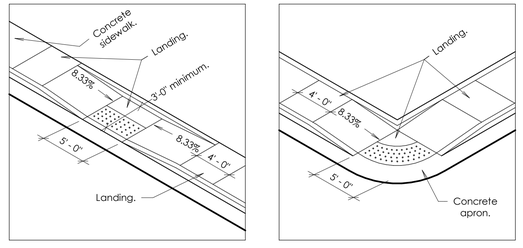

Notes.

1. Unless required otherwise by the authority having jurisdiction, use a light broom finish on ramps and landings to match the finishes of the sidewalks.
2. 5% maximim in direction of travel. Limit cross slope on sidewalks 2%.
3. All landings must have 1:48 cross slope and running slope. Landing must be as wide as the ramp.
4. Cross slope on ramp must be 1:48 or less.
5. Counter slopes of adjoining gutters and paving, adjacent to the curb ramp shall not be steeper than 1:20 (5%).

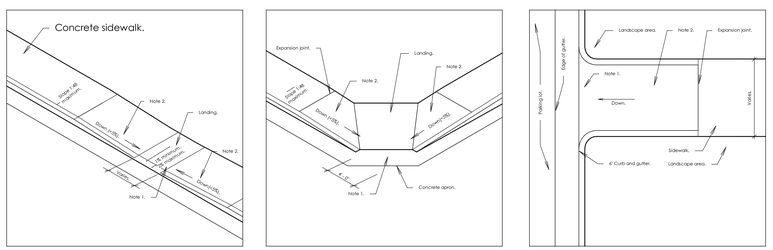

E Accessible Sloped Sidewalks

Scale: 1" = 1'-0"

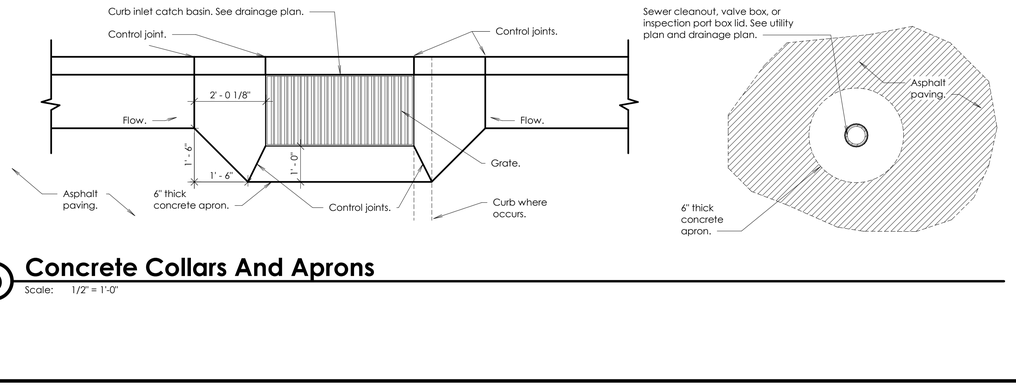

D Concrete Collars And Aprons

Scale: 1/2" = 1'-0"

bhd ARCHITECTS
www.bhdarchitects.com
Phone 801.571.0010
Fax 801.571.0303
Toll Free 888.571.0010
65 East Wadsworth Park Drive
Suite 205 Draper, Utah 84020

LICENSED ARCHITECT Lyle Theodore Harris 6278378-0301 STATE OF UTAH 23 MAY 2025

THE CHURCH OF JESUS CHRIST OF LATTER-DAY SAINTS

Nibley 6 & Nibley UT West Stake

Approx. 3410 South 1200 West, Nibley, Utah
41.670809, -111.860775

Owner #: 514-4728
Plan Series: Heritage 24
County Parcel: 03:050:0016
BHD #: 2403
Date: 29 May 2025

Drawing Issue and Revision Schedule

#	Date	Description

Site Details

C502

5/29/2025 12:16:18 PM

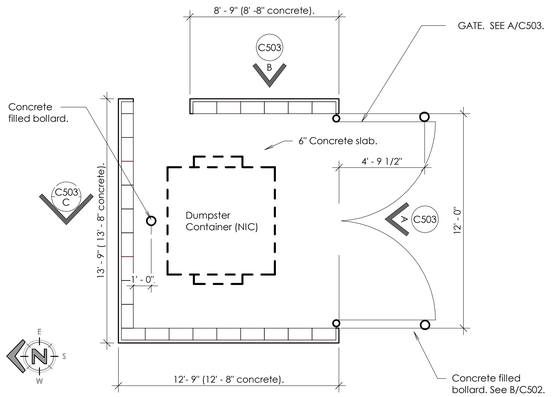

1 Dumpster Enclosure Plan

Scale: 1/4" = 1'-0"

Note:
All steel components of the dumpster enclosure gate shall be hot-dip galvanized and powder coated.

Note:
Provide (3) surface - mounted mushroom stops: 1 at closed position, and 1 for each gate leave at the open position.

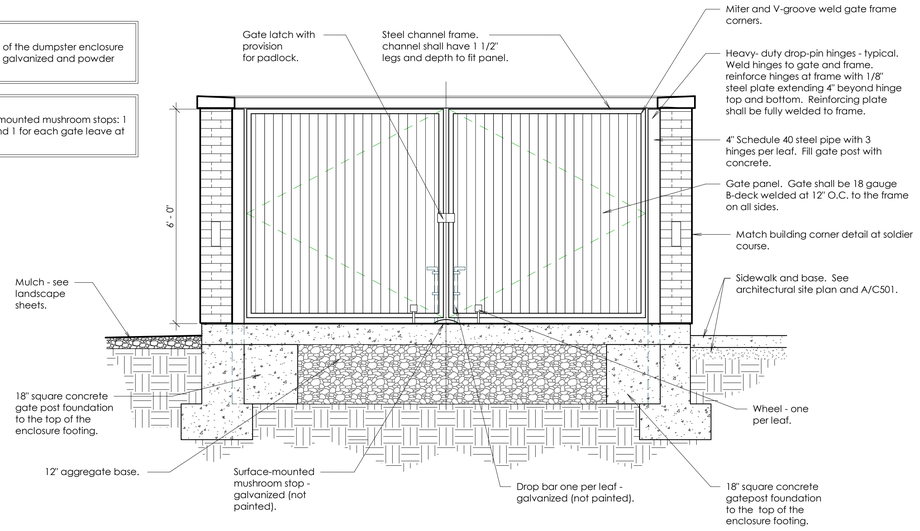

A Dumpster Gate Elevation

Scale: 1/2" = 1'-0"

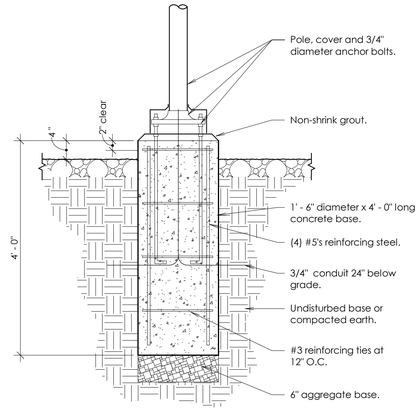

D Pole Light Base In Landscaping Areas

Scale: 3/4" = 1'-0"

Note: Brick details and color shall match main building.

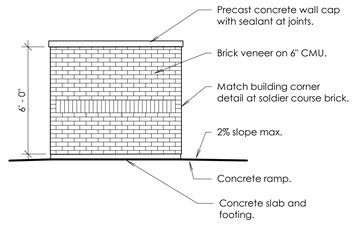

B Dumpster Enclosure Elevation

Scale: 1/4" = 1'-0"

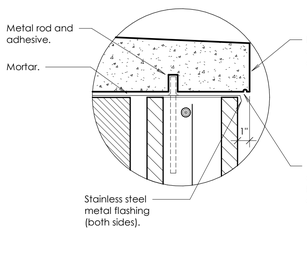

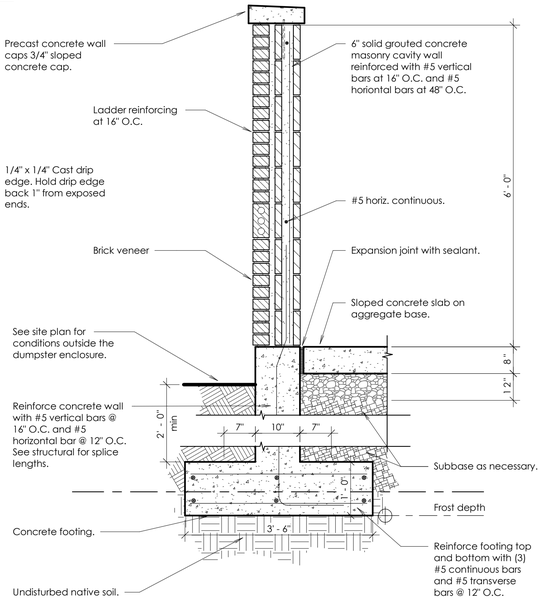

C Dumpster Enclosure Wall Section

Scale: 3/4" = 1'-0"

Note:
Groundwater was discovered at some locations during the geotechnical explorations at approximately 6.5 feet below existing grade. The building has been designed to be above the groundwater elevation, but deeper excavations on the site, such as for utilities, may encounter groundwater. The Contractor shall be responsible for temporary dewatering if groundwater is encountered.

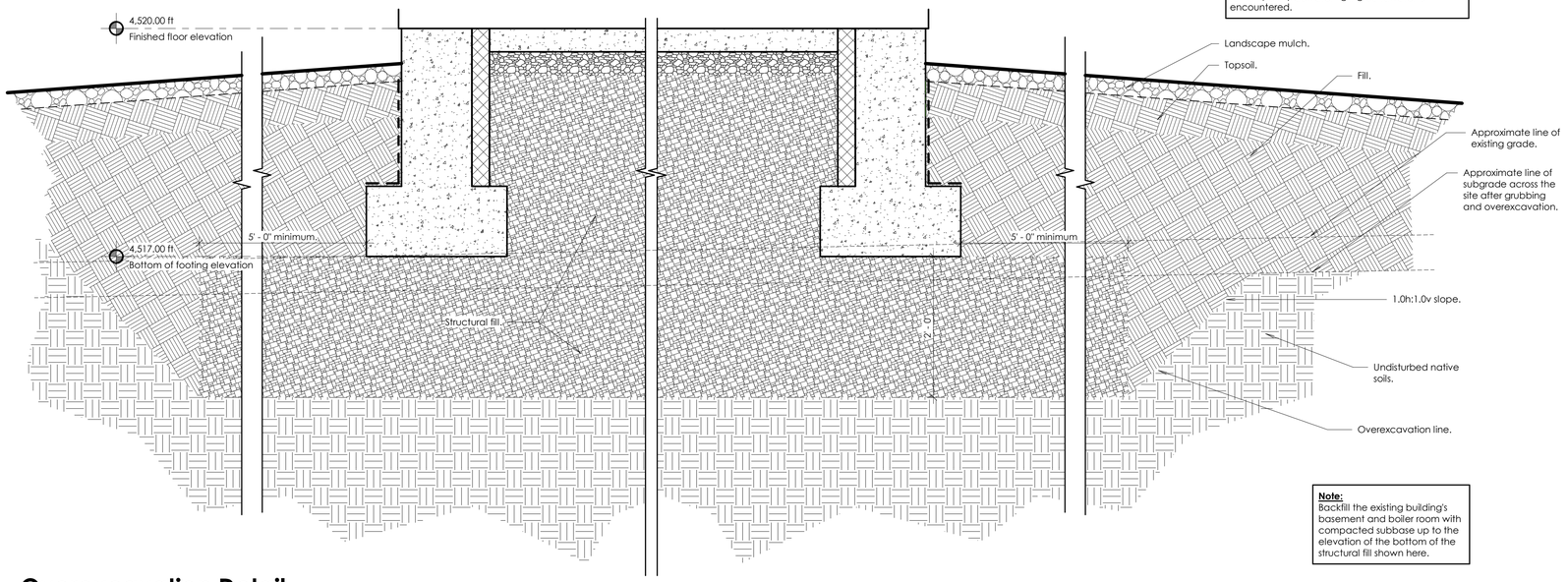

Note:
Backfill the existing building's basement and boiler room with compacted subbase up to the elevation of the bottom of the structural fill shown here.

F Overexcavation Detail

Scale: 1" = 1'-0"

5/29/2025 12:16:19 PM

bhd ARCHITECTS
www.bhdarchitects.com
Phone 801.571.0010
Fax 801.571.0303
Toll Free 888.571.0010
65 East Wadsworth Park Drive
Suite 205 Draper, Utah 84020

LICENSED ARCHITECT Late Theodore Harris 23 MAY 2025 6276578-0301 STATE OF UTAH

THE CHURCH OF JESUS CHRIST OF LATTER-DAY SAINTS

Nibley 6 & Nibley UT West Stake

Approx. 3410 South 1200 West, Nibley, Utah
41.670809, -111.860775

Owner #: 514-4728
Plan Series: Heritage 24
County Parcel: 03:050:0016
BHD #: 2403
Date: 29 May 2025

Drawing Issue and Revision Schedule

#	Date	Description

Site Details

C503

Unit Pricing Notes:

A. For the purpose of bidding, bidders shall follow the overexcavation and fill requirements on the contract documents. This includes removing non-engineered fill in the area of the building and parking lot. The Contractor shall coordinate excavation observations with the Geotechnical Engineer during construction to establish the required extent of non-engineered fill removal.
B. The Contractor shall provide in his bid a unit price for each cubic yard of non-engineered fill removal by which the bid amount was established.
C. This unit price amount will be the amount by which the contract will be reconciled, either for a credit or for a cost change order, depending on the extent of non-engineered fill discovered during construction.
D. The unit price for a credit or cost change order shall be the same amount.
E. The unit price shall include all costs required to increase or decrease the volume of non-engineered fill removed, including but not limited to:
E.A. Excavation, removal, and disposal of non-engineered fill.
E.B. Importation and installation of appropriate replacement fill materials, including compaction.
F. After excavation and removal of non-engineered fill is completed, a change order will be issued to reconcile the difference between the amount of non-engineered fill removal included in the bid above and the actual amount of non-engineered fill used.
F.A. It shall be the excavator's and the Contractor's responsibility to properly document the amount of non-engineered fill removal, required by the following two methods:
F.B. Documentation of the elevations of overexcavation and non-engineered fill removal, as compared to the overexcavation.
F.C. Documentation of delivery and removal truck tickets and receipts.

Overexcavation and Fill Notes:

A. Remove all unconsolidated and non-engineered fill and deleterious materials from the entire site prior to construction. At a minimum, remove 6 inches of existing soil across the entire site.
A.A. Due to the non-engineered fill discovered by the geotechnical engineer, the contractor shall include in the bid removal of 4,500 cubic yards of non-engineered fill and installation of structural fill in its place.
A.B. This amount of non-engineered fill removal shall be in addition to the amount of such fill as might be encountered in required excavations noted in the overcavation and fill notes, and the site details.
B. In the area of the building and mechanical enclosures:
* Overexcavate the entire footprint and 60" beyond at a 1:1 slope to elevation 4515 minimum.
* Install imported structural fill up to the bottom of footing level.
* Install imported structural fill up to base course under the building slab.
* Install structural fill as necessary to raise the grade to the base course under the dumpster slab and pad.

C. At the storage building:
* Overexcavate the entire footprint and 60" beyond at a 1:1 slope to 12" below the footings.
* Install imported structural fill up to the bottom of the footing level.
* Install structural fill up to the base course under the storage building slab.

D. At the pavilion:
* Overexcavate as noted in item A. above.
* Excavate as necessary to install footings or caissons on undisturbed native soils or on structural fill, as required by the site grading.
* Slab may be overexcavated to match footing overexcavation height, or may be overexcavated as noted in item A. above.
* Install structural fill as necessary to raise the grade to the base course under the pavilion slab.

E. At the dumpster enclosure:
* Overexcavate beneath dumpster enclosure at a 1:1 slope to the bottom of the on-site non-engineered fill.
* Overexcavate beneath dumpster enclosure as required to install 12" thick minimum base and 8" thick concrete slab.
* At a 20 foot x 20 foot area in front of the dumpster (as shown on the Site Architectural Plans), install (2) 3" layers of asphalt with 14" minimum base.

F. At sidewalks at building entries:
* Install 18" crushed rock base, full width of sidewalk and full length of sidewalk from the building to the perimeter sidewalk.
* All crushed rock base shall be 3/4" and shall be compacted by procedural compaction.

G. At all other sidewalks, and all site concrete pads and elements.
* Overexcavate as noted in item A. above.
* Install subbase up to the base level.
* Install aggregate base below all site concrete elements, pads and sidewalks. See A/C501 and site details.

H. At asphalt paving:
* Overexcavate as noted in item A. above.
* Install subbase up to the base level.
* Install asphalt paving and base as shown in Detail F/C501 over entire parking lot (excluding the area in front of the dumpster enclosure).

J. All structural fill shall be imported.
K. Install imported structural fill full depth at all utility trenches.
L. Import topsoil as required by the landscape architect. See Landscape Sheets and specifications.
M. All compacted soils shall be density tested.
N. On-site native soils may be used as fill only in landscape areas.

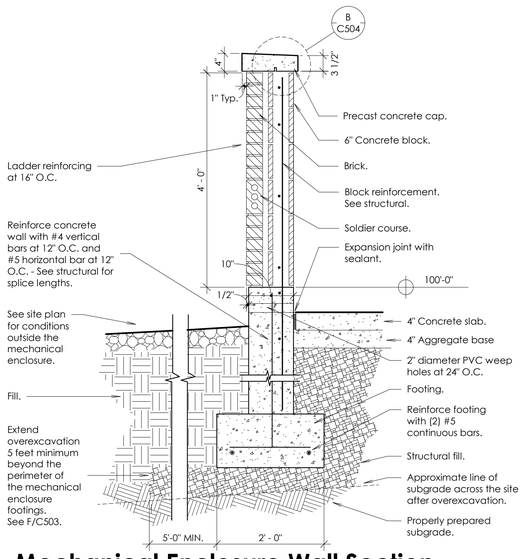

A Mechanical Enclosure Wall Section

Scale: 3/4" = 1'-0"

B Precast Concrete Cap

Scale: Not to scale

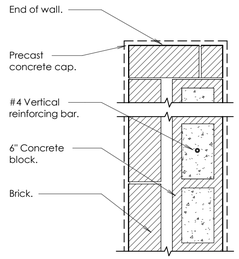

C Mechanical Enclosure Wall Plan

Scale: 3/4" = 1'-0"

Note:
Brick details and color shall match main building.

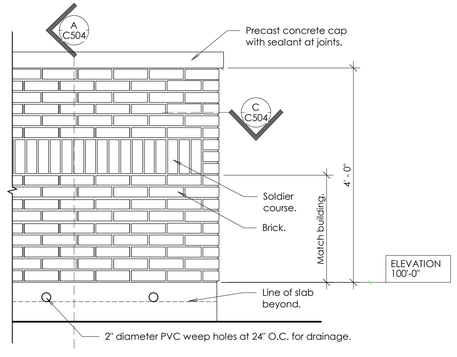

D Mechanical Enclosure Wall Elevation

Scale: 3/4" = 1'-0"

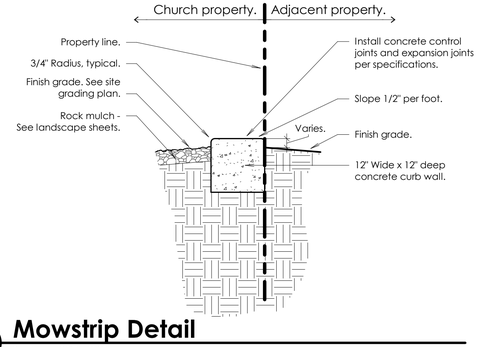

E Mowstrip Detail

Scale: 3/4" = 1'-0"

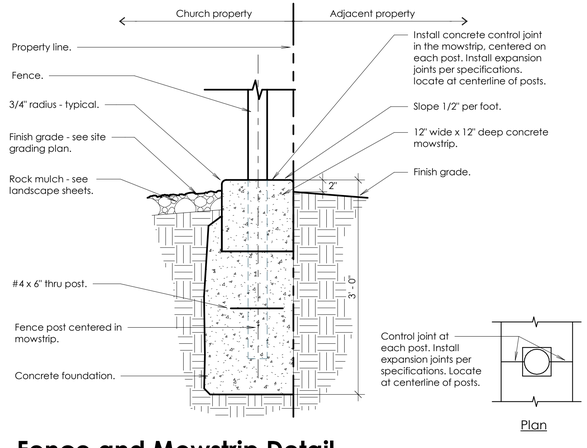

F Fence and Mowstrip Detail

Scale: 1" = 1'-0"

bhd ARCHITECTS
www.bhdarchitects.com
Phone 801.571.0010
Fax 801.571.0303
Toll Free 888.571.0010
65 East Wadsworth Park Drive
Suite 205 Draper, Utah 84020

LICENSED ARCHITECT Late Theodore Harris 6278-0301 STATE OF UTAH 23 MAY 2025

THE CHURCH OF JESUS CHRIST OF LATTER-DAY SAINTS

Nibley 6 & Nibley UT West Stake

Approx. 3410 South 1200 West, Nibley, Utah
41.670809, -111.860775

BHD #: 2403
County Parcel: 03:050:0016
Plan Series: Heritage 24
Owner #: 514-4728
Date: 29 May 2025

Drawing Issue and Revision Schedule

#	Date	Description

Site Details

C504

5/29/2025 12:16:19 PM

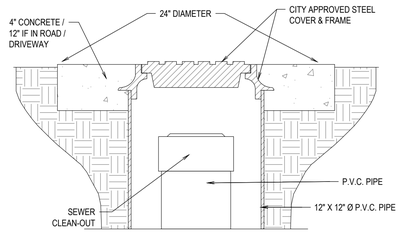

C SEWER CLEAN-OUT
SCALE: N.T.S.

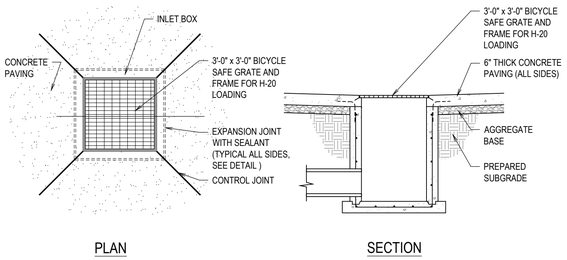

PLAN SECTION

H INLET BOX IN CONCRETE PAVING
SCALE: N.T.S.

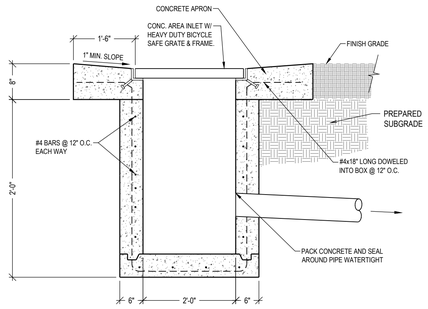

J INLET BOX
SCALE: N.T.S.

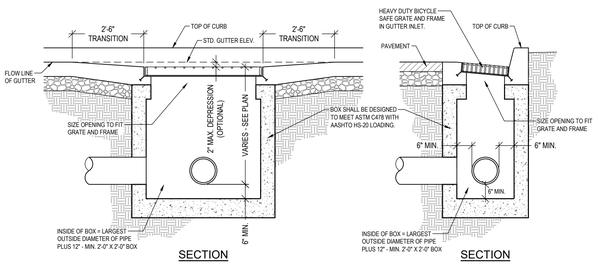

SECTION SECTION

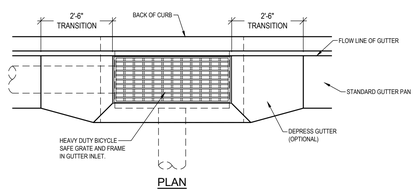

PLAN

NOTES:
1. MATERIALS, CONSTRUCTION, AND WORKMANSHIP SHALL BE IN ACCORDANCE WITH CURRENT EDITION OF "STATE STD. SPEC'S FOR ROAD AND BRIDGE CONST.", ADDENDUMS AND SPECIAL PROVISIONS THERETO.
2. ALL STEEL SHALL HAVE A MINIMUM OF 2" CONCRETE COVER.
3. GREY IRON CASTING: ASTM A48 CLASS 30 MINIMUM.
4. 2"x4" SHEAR KEY REQUIRED BOTH WAYS.

M SINGLE GUTTER INLET BOX
SCALE: N.T.S.

Printed: 28 May 2025 5:17 PM

bhd ARCHITECTS
www.bhdarchitects.com
Phone 801.571.0010
Fax 801.571.0303
Toll Free 888.571.0010
65 East Wadsworth Park Drive
Suite 205 Draper, Utah 84020

PROFESSIONAL ENGINEER
05-29-25
No. 11988925-2202
DANIEL J. CANNING
STATE OF UTAH

McNEIL ENGINEERING™
8610 South Sandy Parkway, Suite 200
Sandy, Utah 84070
801.255.7700 mcneilengineering.com
PROJECT NO: 25333

THE CHURCH OF JESUS CHRIST OF LATTER-DAY SAINTS

Nibley 6 & Nibley UT West Stake
Approx. 3410 South 1200 West, Nibley, Utah
41.670809, -111.860775

Date:	BHD #:	County Parcel:	Plan Series:	Owner #:
29 May 2025	2403	03:050:0016	Heritage 24	514-4728

Drawing Issue and Revision Schedule

#	Date	Description
1	29 May 2025	Bid Documents

Civil Details

C521

~~1 1/2" and~~ 2" meter

1. GENERAL MAG
- A. ~~Turbine~~ meters are required on all systems used exclusively for irrigation or fire protection.
- B. Where domestic use is applicable, use a standard meter.
- C. Before backfilling, secure inspection of installation by ENGINEER.

2. PRODUCTS
- A. Base Course: Untreated base course, APWA Section 32 11 23. Do not use gravel as a base course without ENGINEER's permission.
- B. Backfill: Common fill, APWA Section 31 05 13. BORROW Maximum particle size 3-inches.
- C. Castings: Grey iron class 35 minimum per ASTM A48, coated with asphalt based paint or better.

3. EXECUTION
- A. Meter Placement:
  1) All meters are to be installed ~~in the park strip or within 7 feet of the property line (street side)~~. [in the Parkstrip. Locate in PUE directly behind sidewalk if there is a swale or no parkstip available. Meter shall be installed at the corner of a lot 5-feet from property line.]
  2) Do not install meters under driveway approaches, sidewalks, or curb and gutter.
  3) In new construction, install meter at ~~center of lot or per agency requirements~~.
- B. Meter Box: Set box so grade of the frame and cover matches the grade of the surrounding surface.
- C. Bypass Valve: Lock in off position.
- ~~D. Blocking: Use clay brick or concrete block.~~
- ~~E. Concrete Box:~~ [Meter Barrel: 36" corrugated HDPE, PVC, or other as approved.]
  1) Center frame and cover over water meter.
  2) Allow 1-inch clearance around waterline where water line passes through ~~concrete box~~ wall. Seal opening with compressible seal.
- F. Pipe Outside of Right-of-Way: Coordinate with utility agency or adjacent property owner for type of pipe to be used outside of right-of-way.
- G. Base Course and Backfill Placement: Maximum lift thickness before compaction is 8-inches. Compaction is 95 percent or greater relative to a modified proctor density, APWA Section 31 23 26.

Nibley City Amendments:
1. Install tracer wire from the main to the meter with exposed wire inside the meter can and connected to the tracer wire running along the main.
2. See the Nibley City Approved Materials List (APL) for information on specific product types and manufactures.

522

Nibley City Amendments:
1. Install tracer wire from the main to the meter with exposed wire inside the meter can and connected to the tracer wire running along the main.
2. See the Nibley City Approved Materials List (APL) for information on specific product types and manufactures.

LEGEND

No.	*	ITEM	DESCRIPTION
(A)		~~27"~~ 38" FRAME AND COVER	PLAN ~~502~~ 503
(B)		HDPE BARREL- 36" X 48"	
(C)		STAINLESS STEEL METER BOLTS	5/8" x 2 3/4" BRASS
(D)		~~1 1/2" CUSTOM SETTER WITH BYPASS~~	
(E)		2" CUSTOM SETTER WITH BYPASS	

* FURNISHED BY UTILITY AGENCY

APWA Utah Chapter — *~~1 1/2" and~~ 2" meter* — Plan 522, August 2001

Direct bearing thrust block

1. GENERAL
- A. Thrust design for pipe sizes or configurations not shown require special design.
- B. Bearing areas, volumes, and special thrust blocking details shown on Drawings take precedence over this plan.
- C. Restraint sizing is based upon a maximum operating pressure of 150 psi and a test pressure of 200 psi, and a minimum soil bearing strength of 2,000 psf. Operating pressures in excess of 150 psi or soils with less than 2,000 pound bearing strength will require special design.
- D. Before backfilling around thrust block, secure inspection of installation by ENGINEER.

2. PRODUCTS
- A. Base Course: Untreated base course, APWA Section 32 11 23. Do not use gravel as a base course without ENGINEER's permission.
- B.

Backfill: Common fill, APWA Section 31 05 13. BORROW Maximum particle size 3-inches.
- C. Thrust Bocks: Concrete Class 4000, APWA Section 03 30 04.
- D. Grease: Non-oxide poly-FM.

3. EXECUTION
- A. Pour concrete against undisturbed soil.
- B. Pipe Joints: Do not cover with concrete. Leave completely accessible.
- C. Grease: Apply grease to all buried metal surfaces. Wrap with polyethylene sheet and tape wrap.
- D. Locking restraint devices may be used in conjunction with concrete thrust blocking (at discretion of ENGINEER).
- E. Base Course and Backfill Placement: Maximum lift thickness is 8-inches before compaction. Compaction is 95 percent or greater relative to a modified proctor density, APWA Section 31 23 26.

1. Water Design Standards require mechanical joint restraints designed by the engineer of record and installed in accordance with manufacturer's installation instructions.
2. Where installation of mechanical joint restraints is not possible for new connections and/or for existing piping systems, the design engineer shall provide engineering calculations and details for construction of concrete thrust blocks.
3. APWA Plan 561 is strictly for reference and guidance for repairs and conditions where a design engineer is not available.

Nibley City Amendment:
1. Where the entire piping system is installed with engineer designed mechanical joint restraints, an additional 1.5 to 2.0 square foot concrete thrust block shall be provided.

561

	MINIMUM BEARING AREA IN SQ. FT.				
SIZE OF PIPE	TEES, VALVES DEAD ENDS	90° BENDS	45° BENDS	22 1/2° BENDS	11 1/4° BENDS
4"	2	3	2	2	2
6"	4	5.5	3	2.5	2
8"	6.5	9.5	5	2.75	2.5
12"	14	20	11	5.5	3
14"	19	26.5	14.5	7.5	4
16"	24	34	18.5	9.5	6
20"	27	52	28.5	14.5	9
24"	53	74	41	21	12
30"	81	114	62	32	16

Nibley City Amendment:
1. Where the entire piping system is installed with engineer designed mechanical joint restraints, an additional 1.5 to 2.0 square foot concrete thrust block shall be provided.

APWA Utah Chapter — *Direct bearing thrust block* — Plan 561, August 2010

Sewer lateral connection

1. GENERAL
- A. Before installation, secure acceptance by ENGINEER for all pipe, fittings, and couplings to be used.
- B. Before backfilling, secure inspection of installation by ENGINEER. Give at least 24 hours notice.
- C. Verify if CONTRACTOR or agency is to install the wye.

2. PRODUCTS
- A. Base Course: Untreated base course, APWA Section 32 11 23. Do not use gravel as a base course ~~without ENGINEER's permission~~.
- B. Backfill: Common fill, APWA Section 31 05 13. **BORROW- 3-inch minus**.
- C. Provide agency approved wye or tee with appropriate donut.
- D. Stainless steel straps required.

3. EXECUTION
- A. Tape wrap pipe as required by soil conditions.
- B. Remove core plug from sewer main. Do not break into sewer main to make connection.
- C. Base Course and Backfill Placement: Maximum lift thickness is 8-inches before compaction. Compaction is 95 percent or greater relative to a standard proctor density, APWA Section 31 23 26.

Sewers and sewer laterals located within drinking water source protection zones shall comply with Utah R309-600

431

Sewers and sewer laterals located within drinking water source protection zones shall comply with Utah R309-600

APWA Utah Chapter — *Sewer lateral connection* — Plan 431, January 2011

Nibley City Amendments:
1. Install tracer wire from the valve can to the hydrant with exposed wires inside the valve can and wrapped 3 times around the base of the hydrant.
2. See the Nibley City Approved Materials List for information on specific product types and manufactures.

LEGEND

No.	*	ITEM	DESCRIPTION
(A)		FIRE HYDRANT	AWWA C502
(B)		VALVE BOX WITH LID	2-PIECE CAST IRON
(C)		GATE VALVE WITH 2" X 2" NUT	AWWA C509
(D)		TEE WITH 125 # FLANGE	AWWA C110

* FURNISHED BY UTILITY AGENCY

SECTION

APWA Utah Chapter — *Fire hydrant with valve* — Plan 511, February 2011

PRINT DATE/TIME:1/24/23 10:17 AM

1" & 2" SERVICE TAPS

1. TAPPING: Tapping on Nibley City mains to be performed by Nibley City crews only. Place taps a minimum of 24 inches apart. Use a tapping tool that is sized corresponding to the size of the service line to be installed. No taps within 24 inches of the end of pipe or from the shoulder of the bell of the pipe.
2. TAPE: Teflon tape is required on all taps.
3. INSPECTION: Prior to backfilling around taps, secure inspection of installation by ENGINEER.
4. BACKFILL: Provide and place per APWA Section 33 05 20 BORROW- MAXIMUM PARTICLE SIZE 3-INCHES Compact per APWA Section 31 23 26 to a modified proctor density of 95 percent or greater. Maximum lift thickness is 8 inches before compaction.
5. TRACER: Install tracer wire along the main and services. See Nibley City Approved Materials List

TYPE A – SADDLE CLAMP TAP
N.T.S.

LEGEND

No.	ITEM	DESCRIPTION
(A)	POLY PIPE	POLYETHYLENE WATER SERVICE PIPE
(B)	CORPORATION STOP	BRASS (BALL TYPE)
(C)	SERVICE SADDLE CLAMP	STAINLESS STEEL, BRASS
(D)	SERVICE SADDLE STRAPS	STAINLESS STEEL
(E)	WATER MAIN PIPE	(D.I., C.I.C A.C., P.V.C.)
(F)	COMPRESSION FITTING (W/ STIFFENER)	FLARED FITTING NOT ALLOWED

NIBLEY	NIBLEY CITY WATER DIVISION	1" & 2" TAP	DESIGNED: D. HOLMSTEAD	DATE: 2/1/2023	REVISION BLOCK:	SCALE N.T.S.	SHEET NO: 551 S
			DRAFTED: T. GLOVER	ENG #:			
			CHECKED: T. DICKINSON				

bhd ARCHITECTS
www.bhdarchitects.com
Phone 801.571.0010
Fax 801.571.0303
Toll Free 888.571.0010
65 East Wadsworth Park Drive
Suite 205 Draper, Utah 84020

PROFESSIONAL ENGINEER 05-29-25 No. 11088925-2202 DANIEL J. CANNING STATE OF UTAH

McNEIL ENGINEERING™
8610 South Sandy Parkway, Suite 200
Sandy, Utah 84070
801.255.7700 mcneilengineering.com
PROJECT NO: 25333

THE CHURCH OF JESUS CHRIST OF LATTER-DAY SAINTS

Nibley 6 & Nibley UT West Stake

Approx. 3410 South 1200 West, Nibley, Utah
41.670809, -111.860775

Date: 29 May 2025 **BHD #:** 2403 **County Parcel:** 03:050:0016 **Plan Series:** Heritage 24 **Owner #:** 514-4728

Drawing Issue and Revision Schedule

#	Date	Description
1	29 May 2025	Bid Documents

Civil Details

C531

Printed: 28 May 2025 5:18 PM

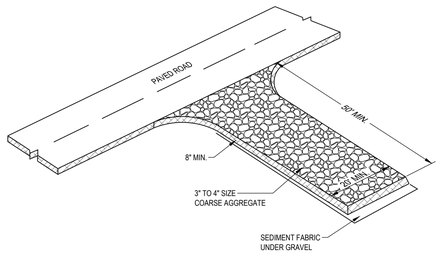

DESCRIPTION:
A STABILIZED PAD OF CRUSHED STONE LOCATED WHERE CONSTRUCTION TRAFFIC ENTERS OR LEAVES THE SITE FROM OR TO PAVED SURFACE.

APPLICATIONS:
AT ANY POINT OF INGRESS OR EGRESS AT A CONSTRUCTION SITE WHERE ADJACENT TRAVELED WAY IS PAVED. GENERALLY APPLIES TO SITES OVER 2 ACRES UNLESS SPECIAL CONDITIONS EXIST.

INSTALLATION/APPLICATION CRITERIA:
- CLEAR GRUB AREA AND GRAD TO PROVIDE MAXIMUM SLOPE OF 2%.
- COMPACT SUB GRADE AND PLACE FILTER FABRIC IF DESIRED (RECOMMENDED FOR ENTRANCES TO REMAIN FOR MORE THAN 3 MONTHS.
- PLACE COARSE AGGREGATE, 1 TO 2-1/2 INCHES IN SIZE, TO A MINIMUM DEPTH OF 8 INCHES.

LIMITATIONS:
- REQUIRES PERIODIC TOP DRESSING WITH ADDITIONAL STONES.
- SHOULD BE USED IN CONJUNCTION WITH STREET SWEEPING ON ADJACENT PUBLIC RIGHT-OF-WAY.

MAINTENANCE:
- INSPECT DAILY FOR LOSS OF GRAVEL OR SEDIMENT BUILDUP.
- INSPECT ADJACENT ROADWAY FOR SEDIMENT DEPOSIT AND CLEAN BY SWEEPING OR SHOVELING.
- REPAIR ENTRANCE AND REPLACE GRAVEL AS REQUIRED TO MAINTAIN CONTROL IN GOOD WORKING CONDITION.
- EXPAND STABILIZED AREA AS REQUIRED TO ACCOMMODATE TRAFFIC AND PREVENT EROSION AT DRIVEWAYS.

OBJECTIVES
- ※ HOUSEKEEPING PRACTICES
- □ CONTAIN WASTE
- □ MINIMIZE DISTURBED AREA
- □ STABILIZE DISTURBED AREA
- □ PROTECT SLOPES/CHANNELS
- ※ CONTROL SITE PERIMETER
- □ CONTROL INTERNAL EROSION

TARGETED POLLUTANTS
- ■ SEDIMENT
- □ NUTRIENTS
- □ TOXIC MATERIALS
- □ OIL & GREASE
- □ FLOATABLE MATERIALS
- □ OTHER WASTE

- ■ HIGH IMPACT
- ※ MEDIUM IMPACT
- □ LOW OR UNKNOWN IMPACT

IMPLEMENTATION REQUIREMENTS
- ■ CAPITAL COSTS
- ※ O & M COSTS
- ※ MAINTENANCE
- □ TRAINING

■ HIGH ※ MEDIUM □ LOW

STABILIZED CONSTRUCTION ENTRANCE C1
SCALE: N.T.S.

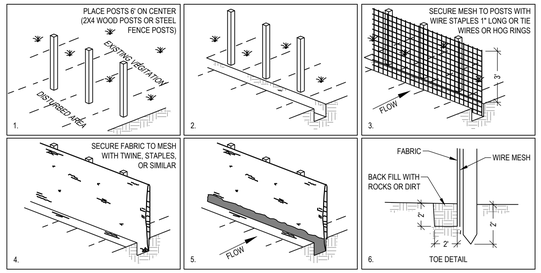

DESCRIPTION:
A TEMPORARY SEDIMENT BARRIER CONSISTING OF ENTRENCHED FILTER FABRIC STRETCHED ACROSS AND SECURED TO SUPPORTING POSTS.

APPLICATIONS:
- PERIMETER CONTROL: PLACER BARRIER AT DOWNGRADE LIMITS OF DISTURBANCE.
- SEDIMENT BARRIER: PLACE BARRIER AT TOE OF SLOPE OR SOIL STOCKPILE.
- PROTECTION OF EXISTING WATERWAYS: PLACE BARRIER AT TOP OF STREAM BANK
- INLET PROTECTION: PLACE FENCE SURROUNDING CATCH BASINS

INSTALLATION/APPLICATION CRITERIA:
- PLACE POSTS 6 FEET APART ON CENTER ALONG CONTOUR (OR USE PRE-ASSEMBLED UNIT) AND DRIVE 2 FEET MINIMUM INTO GROUND. EXCAVATE AN ANCHOR TRENCH IMMEDIATELY UPGRADIENT OF POSTS.
- SECURE WIRE MESH (14 GAGE MIN. WITH 6 INCH OPENINGS) TO UPSLOPE SIDE OF POSTS. ATTACH WITH HEAVY DUTY 1 INCH LONG WIRE STAPLES, TIE WIRES OR HOG RINGS.
- CUT FABRIC TO REQUIRED WIDTH, UNROLL ALONG LENGTH OF BARRIER AND DRAPE OVER BARRIER. SECURE FABRIC TO MESH WITH TWINE, STAPLES, OR SIMILAR, WITH TRAILING EDGE EXTENDING INTO ANCHOR TRENCH.
- BACKFILL OVER FILTER FABRIC TO ANCHOR.

LIMITATIONS:
- RECOMMENDED MAXIMUM DRAINAGE AREA OF 0.5 ACRE PER 100 FEET OF FENCE.
- RECOMMENDED MAXIMUM UPGRADIENT SLOPE LENGTH OF 150 FEET.
- RECOMMENDED MAXIMUM UPHILL GRADE OF 2:1 (50%).
- RECOMMENDED MAXIMUM FLOW RATE OF 0.5 CFS.
- PONDING SHOULD NOT BE ALLOWED BEHIND FENCE.

MAINTENANCE:
- INSPECT IMMEDIATELY AFTER ANY RAINFALL AND AT LEAST DAILY DURING PROLONGED RAINFALL.
- LOOK FOR RUNOFF BYPASSING ENDS OF BARRIERS OR UNDERCUTTING BARRIERS.
- REPAIR OR REPLACE DAMAGED AREAS OF THE BARRIER AND REMOVE ACCUMULATED SEDIMENT.
- REANCHOR FENCE AS NECESSARY TO PREVENT SHORTCUTTING.
- REMOVE ACCUMULATED SEDIMENT WHEN IT REACHES 1/2 THE HEIGHT OF THE FENCE.

OBJECTIVES
- □ HOUSEKEEPING PRACTICES
- □ CONTAIN WASTE
- □ MINIMIZE DISTURBED AREA
- □ STABILIZE DISTURBED AREA
- □ PROTECT SLOPES/CHANNELS
- ※ CONTROL SITE PERIMETER
- ※ CONTROL INTERNAL EROSION

TARGETED POLLUTANTS
- ■ SEDIMENT
- □ NUTRIENTS
- □ TOXIC MATERIALS
- □ OIL & GREASE
- □ FLOATABLE MATERIALS
- □ OTHER WASTE

- ■ HIGH IMPACT
- ※ MEDIUM IMPACT
- □ LOW OR UNKNOWN IMPACT

IMPLEMENTATION REQUIREMENTS
- ※ CAPITAL COSTS
- ※ O & M COSTS
- ※ MAINTENANCE
- □ TRAINING

■ HIGH ※ MEDIUM □ LOW

SILT FENCE C3
SCALE: N.T.S.

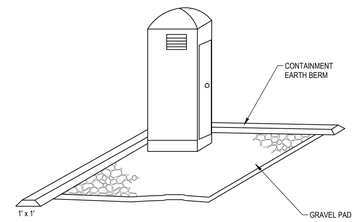

DESCRIPTION:
TEMPORARY ON-SITE SANITARY FACILITIES FOR CONSTRUCTION PERSONNEL.

APPLICATIONS:
- ALL SITES WITH NO PERMANENT SANITARY FACILITIES OR WHERE PERMANENT FACILITY IS TO FAR FROM ACTIVITIES.

INSTALLATION/APPLICATION CRITERIA:
- LOCATE PORTABLE TOILETS IN CONVENIENT LOCATIONS THROUGHOUT THE SITE.
- PREPARE LEVEL, GRAVEL SURFACE AND PROVIDE CLEAR ACCESS TO THE TOILETS FOR SERVICING AND FOR ON-SITE PERSONNEL.
- CONSTRUCT EARTH BERM PERIMETER (SEE EARTH BERM BARRIER INFORMATION SHEET), CONTROL FOR SPILL/PROTECTION LEAK.

LIMITATIONS:
- NO LIMITATIONS

MAINTENANCE:
- PORTABLE TOILETS SHOULD BE MAINTAINED IN GOOD WORKING ORDER BY LICENSED SERVICE WITH DAILY OBSERVATION FOR LEAK DETECTION.
- REGULAR WASTE COLLECTION SHOULD BE ARRANGED WITH LICENSED SERVICE.
- ALL WASTE SHOULD BE DEPOSITED IN SANITARY SEWER SYSTEM FOR TREATMENT WITH APPROPRIATE AGENCY APPROVAL.

OBJECTIVES
- □ HOUSEKEEPING PRACTICES
- ※ CONTAIN WASTE
- ※ MINIMIZE DISTURBED AREA
- □ STABILIZE DISTURBED AREA
- □ PROTECT SLOPES/CHANNELS
- □ CONTROL SITE PERIMETER
- □ CONTROL INTERNAL EROSION

TARGETED POLLUTANTS
- □ SEDIMENT
- □ NUTRIENTS
- □ TOXIC MATERIALS
- □ OIL & GREASE
- □ FLOATABLE MATERIALS
- ■ OTHER WASTE

- ■ HIGH IMPACT
- ※ MEDIUM IMPACT
- □ LOW OR UNKNOWN IMPACT

IMPLEMENTATION REQUIREMENTS
- □ CAPITAL COSTS
- ※ O & M COSTS
- ※ MAINTENANCE
- ※ TRAINING

■ HIGH ※ MEDIUM □ LOW

PORTABLE TOILETS C5
SCALE: N.T.S.

FILTERSOCK SPECIFICATION:

FILTREXX FILTERSOCK INSTALLATION AND MAINTENANCE

1.0 DESCRIPTION:
THIS WORK SHALL CONSIST OF FURNISHING, INSTALLING, MAINTAINING AND DISPERSING (IF NEEDED) A WATER PERMEABLE COMPOST FILTER SOCK (FILTREXX FILTERSOCK) TO CONTAIN SOIL EROSION AND SEDIMENT BY REMOVING SOIL PARTICLES FROM WATER MOVING OFF SITE INTO ADJACENT WATERWAYS OR STORM WATER DRAINAGE SYSTEMS. FILTERSOCKS WILL BE USED AS A FORM OF INLET PROTECTION FOR OPERATIONAL STORM DRAINAGE SYSTEMS.

2.0 COMPOST PRODUCTS USED TO FILL FILTREXX FILTERSOCKS
1. COMPOST: COMPOST USED FOR FILTREXX FILTERSOCKS SHALL BE WEED FREE AND DERIVED FROM A WELL-DECOMPOSED SOURCE OF ORGANIC MATTER. THE COMPOST SHALL BE PRODUCED USING AN AEROBIC COMPOSTING PROCESS MEETING CFR 503 REGULATIONS, INCLUDING TIME AND TEMPERATURE DATA INDICATING EFFECTIVE WEED SEED, PATHOGEN AND INSECT LARVAE KILL. THE COMPOST SHALL BE FREE OF ANY REFUSE, CONTAMINANTS OR OTHER MATERIALS TOXIC TO PLANT GROWTH. NON-COMPOSTED PRODUCTS WILL NOT BE ACCEPTED. TEST METHODS FOR THE ITEMS BELOW SHOULD FOLLOW USCC TMECC GUIDELINES FOR LABORATORY PROCEDURES:
   A. PH - 5.0-8.0 IN ACCORDANCE WITH TMECC 04.11-A, "ELECTROMETRIC PH DETERMINATIONS FOR COMPOST"
   B. PARTICLE SIZE - 99% PASSING A 1" SIEVE, 90% PASSING A _" SIEVE AND A MINIMUM OF 70% GREATER THAN THE 3/8" SIEVE. A TOTAL OF 98 % SHALL NOT EXCEED 3 INCHES IN LENGTH, IN ACCORDANCE WITH TMECC 02.02-B, "SAMPLE SIEVING FOR AGGREGATE SIZE CLASSIFICATION"
   C. MOISTURE CONTENT OF LESS THAN 60% IN ACCORDANCE WITH STANDARDIZED TEST METHODS FOR MOISTURE DETERMINATION.
   D. MATERIAL SHALL BE RELATIVELY FREE (<1% BY DRY WEIGHT) OF INERT OR FOREIGN MAN MADE MATERIALS E. A SAMPLE SHALL BE SUBMITTED TO THE ENGINEER FOR APPROVAL PRIOR TO BEING USED AND MUST COMPLY WITH ALL LOCAL, STATE AND FEDERAL REGULATIONS.

3.0 CONSTRUCTION AND INSTALLATION OF FILTREXX FILTERSOCKS:
1. FILTREXX FILTERSOCKS WILL BE USED AS A FORM OF INLET PROTECTION ON CONSTRUCTION SITES WHICH REQUIRE PROTECTION AGAINST SEDIMENT LADEN WATER AFTER STORM DRAINS BECOME OPERATIONAL.
2. FILTREXX FILTERSOCKS WILL BE PLACED AT LOCATIONS INDICATED ON PLANS AS DIRECTED BY THE ENGINEER. FILTERSOCKS SHOULD BE INSTALLED IN A PATTERN THAT ALLOWS COMPLETE PROTECTION OF THE INLET AREA
3. INSTALLATION OF FILTREXX FILTERSOCKS WILL ENSURE A MINIMAL OVERLAP OF AT LEAST ONE FOOT ON EITHER SIDE OF THE OPENING BEING PROTECTED. THE FILTERSOCKS WILL BE ANCHORED TO THE SOIL BEHIND THE CURB USING STAPLES, STAKES OR OTHER DEVICES CAPABLE OF HOLDING THE FILTERSOCK IN PLACE.
4. STANDARD SIZES OF FILTERSOCKS FOR INLET PROTECTION WILL BE 8" DIAMETER PRODUCTS. IN SEVERE FLOW SITUATIONS, LARGER FILTERSOCKS MAY BE RECOMMENDED BY THE ENGINEER.
5. FILTERSOCKS SHALL BE CONSTRUCTED OF A WOVEN MATERIAL AND FILLED WITH A COMPOST PRODUCT THAT PASSES THE CRITERIA LISTED IN SECTION 2.
6. IF THE FILTERSOCKS BECOME CLOGGED WITH DEBRIS AND SEDIMENT, THEY SHALL BE MAINTAINED SO AS TO ASSURE A PROPER DRAINAGE AND WATER FLOW INTO THE STORM DRAIN. IN SEVERE STORM EVENTS, OVERFLOW OF THE FILTERSOCK MAY BE ACCEPTABLE IN ORDER TO KEEP THE AREA FROM FLOODING.
7. THE FILTERSOCKS SHALL BE POSITIONED SO AS TO PROVIDE COMPLETE PHYSICAL BARRIER TO THE DRAIN ITSELF, ALLOWING SEDIMENT TO COLLECT ON THE OUTSIDE OF THE FILTERSOCKS. SEE ATTACHED SCHEMATIC FOR FILTREXX FILTERSOCK INSTALLATION.
8. FOR AREAS WHERE FILTERSOCKS ARE TO BE LEFT AS A PERMANENT PART OF THE LANDSCAPE, FILTERSOCKS MAY BE SEEDED DURING TIME OF MANUFACTURE TO CREATE A LIVING SOCK. FOR SEEDING OPTIONS, THE ENGINEER MAY SIMPLY REPLACE ALL LANGUAGE ABOVE WITH "LIVING FILTREXX FILTERSOCKS"

4.0 MAINTENANCE:
1. THE CONTRACTOR SHALL MAINTAIN FILTREXX FILTERSOCKS IN A FUNCTIONAL CONDITION AT ALL TIMES AND IT SHALL BE ROUTINELY INSPECTED.
2. WHERE THE FILTERSOCK REQUIRES REPAIR, IT WILL BE ROUTINELY REPAIRED.
3. THE CONTRACTOR SHALL REMOVE SEDIMENTS COLLECTED AT THE BASE OF THE FILTERSOCK WHEN THEY REACH 1/3 OF THE EXPOSED HEIGHT OF THE FILTERSOCK, OR AS DIRECTED BY THE ENGINEER.
4. THE FILTREXX FILTERSOCK WILL BE DISPERSED ON SITE WHEN NO LONGER REQUIRED, AS DETERMINED BY THE ENGINEER. THE NETTING MATERIAL WILL BE DISPOSED OF IN NORMAL TRASH CONTAINERS OR REMOVED BY THE CONTRACTOR.
5. REGULAR MAINTENANCE INCLUDES LIFTING THE FILTREXX FILTERSOCKS AND CLEANING UNDER THEM AS SEDIMENT COLLECTS.

5.0 METHOD OF MEASUREMENT:
BID ITEMS SHALL SHOW MEASUREMENT AS `FILTREXX FILTERSOCK' PER LINEAR FOOT, INSTALLED OR PER INLET, AS SPECIFIED BY THE ENGINEER.

6.0 PERFORMANCE:
1. CONTRACTOR IS RESPONSIBLE FOR ESTABLISHING A WORKING EROSION CONTROL SYSTEM AND MAY, WITH APPROVAL OF THE ENGINEER, WORK OUTSIDE THE MINIMUM CONSTRUCTION REQUIREMENTS AS NEEDED.
2. WHERE THE FILTERSOCK DETERIORATES OR FAILS, IT WILL BE REPAIRED OR REPLACED WITH A MORE EFFECTIVE ALTERNATIVE.
3. CONTRACTOR IS REQUIRED TO BE A CERTIFIED FILTREXX INSTALLER AS DETERMINED BY FILTREXX INTERNATIONAL, LLC (440-926-8041 OR VISIT WEBSITE AT FILTREXX.COM). CERTIFICATION SHALL BE CONSIDERED CURRENT IF APPROPRIATE IDENTIFICATION IS SHOWN DURING TIME OF BID OR AT TIME OF APPLICATION.

7.0 APPLICATION GUIDELINES:
1. FILTREXX FILTERSOCKS SHALL EITHER BE MADE ON SITE OR DELIVERED TO THE JOBSITE USING A 3 MIL TUBULAR HDPE KNITTED MESH NETTING MATERIAL, FILLED WITH COMPOST PASSING THE ABOVE SPECIFICATIONS FOR COMPOST PRODUCTS AS OUTLINED IN 2.0.
2. FILTREXX FILTERSOCKS NETTING MATERIALS ARE AVAILABLE ONLY FROM FILTREXX INTERNATIONAL, LLC AND ARE THE ONLY CERTIFIED MESH MATERIALS ACCEPTED IN CREATING FILTREXX PRODUCTS ON SITE OR AS DELIVERED TO THE JOB SITE. STANDARD FILTREXX COLOR CODING SYSTEMS INCLUDE YELLOW AND BLACK STRIPED MESH NETTING WITH 3/8" MESH OPENINGS FOR INLET PROTECTION. OTHER COLORS ARE ONLY ACCEPTABLE AS APPROVED BY BOTH THE ENGINEER AND FILTREXX INTERNATIONAL, LLC.
3. CONTRACTOR IS REQUIRED TO BE A CERTIFIED FILTREXX INSTALLER AS DETERMINED BY FILTREXX INTERNATIONAL, LLC (440-926-8041 OR VISIT WEBSITE AT FILTREXX.COM). CERTIFICATION SHALL BE CONSIDERED CURRENT IF APPROPRIATE IDENTIFICATION IS SHOWN DURING TIME OF BID OR AT TIME OF APPLICATION.

8.0 AVAILABLE VENDORS FILTREXX FILTERSOCKS MAY BE PURCHASED FROM THE FOLLOWING CERTIFIED FILTREXX INSTALLERS:

WINDSWEPT ORGANIX INC.
WORK: 480-963-4638
FAX: 408-940-4261
850 SOUTH BOGLE AVE, SUITE 2
CHANDLER, AZ 85225

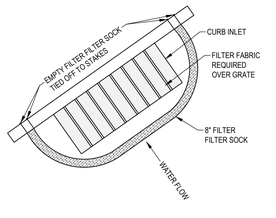

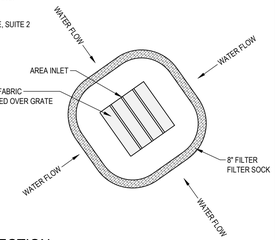

SEDIMENT BARRIER / FILTER SOCK PROTECTION A1
SCALE: N.T.S. © REPLENISH

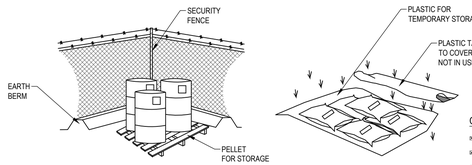

- CONTROLLED STORAGE LOCATION
- BERMED PERIMETER IMPOUNDMENT
- STORAGE OFF GROUND
- COVER WHEN NOT IN USE

DESCRIPTION:
CONTROLLED STORAGE OF ON-SITE MATERIALS.

APPLICATIONS:
- STORAGE OF HAZARDOUS, TOXIC, AND ALL CHEMICAL SUBSTANCES.
- ANY CONSTRUCTION SITE WITH OUTSIDE STORAGE OF MATERIALS.

INSTALLATION/APPLICATION CRITERIA:
- DESIGNATE A SECURED AREA WITH LIMITED ACCESS AS THE STORAGE LOCATION. ENSURE NO WATERWAYS OR DRAINAGE PATHS ARE NEARBY.
- CONSTRUCT COMPACTED EARTHEN BERM (SEE EARTH BERM BARRIER INFORMATION SHEET), OR SIMILAR PERIMETER CONTAINMENT AROUND STORAGE LOCATION FOR IMPOUNDMENT IN THE CASE OF SPILLS.
- ENSURE ALL ON-SITE PERSONNEL UTILIZE DESIGNATED STORAGE AREA. DO NOT STORE EXCESSIVE AMOUNTS OF MATERIAL THAT WILL NOT BE UTILIZED ON SITE.
- FOR ACTIVE USE OF MATERIAL AWAY FROM THE STORAGE AREA ENSURE MATERIALS ARE NOT SET DIRECTLY ON THE GROUND AND ARE COVERED WHEN NOT IN USE. PROTECT STORM DRAINAGE DURING USE.

LIMITATIONS:
- DOES NOT PREVENT CONTAMINATION DUE TO MISHANDLING OF PRODUCTS.
- SPILL PREVENTION AND RESPONSE PLAN STILL REQUIRED.
- ONLY EFFECTIVE IF MATERIALS ARE ACTIVELY STORED IN CONTROLLED LOCATION.

MAINTENANCE:
- INSPECT DAILY AND REPAIR ANY DAMAGE TO PERIMETER IMPOUNDMENT OR SECURITY FENCING.
- CHECK MATERIALS ARE BEING CORRECTLY STORED (I.E. STANDING UPRIGHT, IN LABELED CONTAINERS, TIGHTLY CAPPED) AND THAT NO MATERIALS ARE BEING STORED AWAY FROM THE DESIGNATED LOCATION.

OBJECTIVES
- ※ HOUSEKEEPING PRACTICES
- ※ CONTAIN WASTE
- □ MINIMIZE DISTURBED AREA
- □ STABILIZE DISTURBED AREA
- □ PROTECT SLOPES/CHANNELS
- □ CONTROL SITE PERIMETER
- □ CONTROL INTERNAL EROSION

TARGETED POLLUTANTS
- □ SEDIMENT
- □ NUTRIENTS
- ■ TOXIC MATERIALS
- □ OIL & GREASE
- □ FLOATABLE MATERIALS
- ※ OTHER WASTE

- ■ HIGH IMPACT
- ※ MEDIUM IMPACT
- □ LOW OR UNKNOWN IMPACT

IMPLEMENTATION REQUIREMENTS
- ※ CAPITAL COSTS
- ※ O & M COSTS
- ※ MAINTENANCE
- ■ TRAINING

■ HIGH ※ MEDIUM □ LOW

MATERIALS STORAGE A3
SCALE: N.T.S.

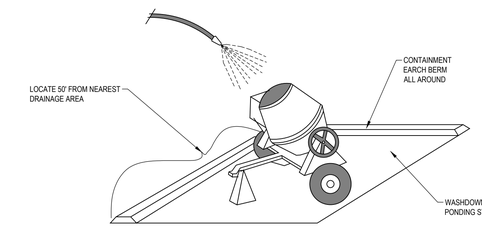

DESCRIPTION:
PREVENT OR REDUCE THE DISCHARGE OF POLLUTANTS TO STORM WATER FROM CONCRETE WASTE BY CONDUCTING WASHOUT OFF-SITE, PERFORMING ON-SITE WASHOUT IN A DESIGNATED AREA, AND TRAINING EMPLOYEES AND SUBCONTRACTORS.

APPLICATIONS:
- THIS TECHNIQUE IS APPLICABLE TO ALL TYPES OF SITES.

INSTALLATION/APPLICATION CRITERIA:
- STORE DRY AND WET MATERIALS UNDER COVER, AWAY FROM DRAINAGE AREAS.
- AVOID MIXING EXCESS AMOUNTS OF FRESH CONCRETE OR CEMENT ON-SITE.
- PERFORM WASHOUT OF CONCRETE TRUCKS OFF-SITE OR IN DESIGNATED AREAS ONLY.
- DO NOT WASH OUT CONCRETE TRUCKS INTO STORM DRAINS, OPEN DITCHES, STREETS, OR STREAMS.
- DO NOT ALLOW EXCESS CONCRETE TO BE DUMPED ON-SITE, EXCEPT IN DESIGNATED AREAS.
- WHEN WASHING CONCRETE TO REMOVE FINE PARTICLES AND EXPOSE THE AGGREGATE, AVOID CREATING RUNOFF BY DRAINING THE WATER WITHIN A BERMED OR LEVEL AREA (SEE EARTH BERM BARRIER INFORMATION SHEET.)
- TRAIN EMPLOYEES AND SUBCONTRACTORS IN PROPER CONCRETE WASTE MANAGEMENT.

LIMITATIONS:
- OFF-SITE WASHOUT OF CONCRETE WASTES MAY NOT ALWAYS BE POSSIBLE.

MAINTENANCE:
- INSPECT SUBCONTRACTORS T ENSURE THAT CONCRETE WASTES ARE BEING PROPERLY MANAGED.
- IF USING A TEMPORARY PIT, DISPOSE HARDENED CONCRETE ON A REGULAR BASIS.

OBJECTIVES
- □ HOUSEKEEPING PRACTICES
- ※ CONTAIN WASTE
- □ MINIMIZE DISTURBED AREA
- □ STABILIZE DISTURBED AREA
- □ PROTECT SLOPES/CHANNELS
- □ CONTROL SITE PERIMETER
- □ CONTROL INTERNAL EROSION

TARGETED POLLUTANTS
- □ SEDIMENT
- □ NUTRIENTS
- □ TOXIC MATERIALS
- □ OIL & GREASE
- □ FLOATABLE MATERIALS
- ※ OTHER WASTE

- ■ HIGH IMPACT
- ※ MEDIUM IMPACT
- □ LOW OR UNKNOWN IMPACT

IMPLEMENTATION REQUIREMENTS
- □ CAPITAL COSTS
- □ O & M COSTS
- ※ MAINTENANCE
- ※ TRAINING

■ HIGH ※ MEDIUM □ LOW

CONCRETE WASTE MANAGEMENT A5
SCALE: N.T.S.

bhd ARCHITECTS
www.bhdarchitects.com
Phone 801.571.0010
Fax 801.571.0303
Toll Free 888.571.0010
65 East Wadsworth Park Drive
Suite 205 Draper, Utah 84020

PROFESSIONAL ENGINEER
05-29-25
No. 14988925-2202
DANIEL J. CANNING
STATE OF UTAH

McNEIL ENGINEERING
8618 South Sandy Parkway, Suite 200
Sandy, Utah 84070
801.255.7700 mcneilengineering.com

PROJECT NO: 25333

THE CHURCH OF JESUS CHRIST OF LATTER-DAY SAINTS

Nibley 6 & Nibley UT West Stake

Approx. 3410 South 1200 West, Nibley, Utah
41.670809, -111.865775

Owner #: 514-4728
Plan Series: Heritage 24
County Parcel: 03:030:0016
BHD #: 2403
Date: 29 May 2025

Drawing Issue and Revision Schedule

#	Date	Description
1	29 May 2025	Bid Documents

Civil Details

C571

Printed: 29 May 2025 10:36 AM

GENERAL NOTES

1.1 COMPLIANCE

1. ALL WORK TO CONFORM TO GOVERNING MUNICIPALITY'S STANDARDS, SPECIFICATIONS AND REQUIREMENTS.
2. ALL CONSTRUCTION AND MATERIALS SHALL BE IN ACCORDANCE WITH THESE CONTRACT DOCUMENTS AND THE MOST RECENT, ADOPTED EDITIONS OF THE FOLLOWING: INTERNATIONAL BUILDING CODE (IBC), THE INTERNATIONAL PLUMBING CODE, STATE DRINKING WATER REGULATIONS, APWA MANUAL OF STANDARD PLANS AND SPECIFICATIONS, ADA ACCESSIBILITY GUIDELINES.
3. ALL CONSTRUCTION SHALL BE AS SHOWN ON THESE PLANS. ANY REVISIONS MUST HAVE PRIOR WRITTEN APPROVAL.

1.2 PERMITTING AND INSPECTIONS

1. PRIOR TO STARTING CONSTRUCTION, THE CONTRACTOR SHALL BE RESPONSIBLE FOR MAKING SURE THAT ALL REQUIRED PERMITS AND APPROVALS HAVE BEEN OBTAINED. NO CONSTRUCTION OR FABRICATION SHALL BEGIN UNTIL THE CONTRACTOR HAS RECEIVED THOROUGHLY REVIEWED PLANS AND OTHER DOCUMENTS APPROVED BY ALL OF THE PERMITTING AUTHORITIES.
2. CONTRACTOR IS RESPONSIBLE FOR SCHEDULING AND NOTIFYING ARCHITECT/ENGINEER OR INSPECTING AUTHORITY 48 HOURS IN ADVANCE OF COVERING UP ANY PHASE OF CONSTRUCTION REQUIRING OBSERVATION.
3. ANY WORK IN THE PUBLIC RIGHT-OF-WAY WILL REQUIRE PERMITS FROM THE APPROPRIATE, CITY, COUNTY OR STATE AGENCY CONTROLLING THE ROAD AND WITH APPROPRIATE INSPECTIONS.

1.3 COORDINATION & VERIFICATION

1. ALL DIMENSIONS, GRADES & UTILITY DESIGNS SHOWN ON THE PLANS SHALL BE VERIFIED BY THE CONTRACTOR PRIOR TO CONSTRUCTION. CONTRACTOR SHALL NOTIFY ARCHITECT/ENGINEER OF ANY DISCREPANCIES PRIOR TO PROCEEDING WITH CONSTRUCTION FOR NECESSARY PLAN OR GRADE CHANGES. NO EXTRA COMPENSATION SHALL BE PAID TO THE CONTRACTOR FOR WORK HAVING TO BE REDONE DUE TO DIMENSIONS OR GRADES SHOWN INCORRECTLY ON THESE PLANS, IF NOT VERIFIED AND NOTIFICATION OF CONFLICTS HAVE NOT BEEN BROUGHT TO THE ATTENTION OF THE ARCHITECT/ENGINEER.
2. CONTRACTOR MUST VERIFY ALL EXISTING CONDITIONS BEFORE BIDDING AND BRING UP ANY QUESTIONS BEFOREHAND. NO ALLOWANCE WILL BE MADE FOR DISCREPANCIES OR OMISSIONS THAT CAN BE EASILY OBSERVED.
3. CONTRACTOR TO COORDINATE WITH ALL OTHER DISCIPLINES, INCLUDING BUT NOT LIMITED TO: LANDSCAPE PLANS, SITE ELECTRICAL SITE LIGHTING PLANS AND ELECTRICAL SERVICE TO THE BUILDING(S), MECHANICAL PLANS FOR LOCATION OF SERVICES TO THE BUILDING(S), INCLUDING FIRE PROTECTION, ARCHITECTURAL SITE PLAN FOR DIMENSIONS, ACCESSIBLE ROUTES, ETC., NOT SHOWN ON CIVIL PLANS.
4. CONTRACTOR IS TO COORDINATE LOCATION OF NEW TELEPHONE SERVICE, GAS SERVICE, CABLE, ETC. TO BUILDING WITH THE APPROPRIATE UTILITY COMPANY. FOR TELEPHONE, CONTRACTOR TO FURNISH CONDUIT, PLYWOOD BACKBOARD, AND GROUND WIRE, AS REQUIRED.

1.4 SAFETY AND PROTECTION

1. CONTRACTOR IS SOLELY RESPONSIBLE FOR THE MEANS AND METHODS OF CONSTRUCTION,
2. CONTRACTOR IS RESPONSIBLE FOR THE SAFETY OF THE PROJECT AND SHALL MEET ALL OSHA REQUIREMENTS.
3. CONTRACTOR IS RESPONSIBLE FOR CONFORMING TO LOCAL AND FEDERAL CODES GOVERNING SHORING AND BRACING OF EXCAVATIONS AND TRENCHES, AND FOR THE PROTECTION OR WORKERS AND PUBLIC.
4. CONTRACTOR SHALL TAKE ALL MEASURES NECESSARY TO PROTECT ALL EXISTING PUBLIC AND PRIVATE PROPERTY, ROADWAYS, AND UTILITY IMPROVEMENTS. DAMAGE TO EXISTING IMPROVEMENTS CAUSED BY THE CONTRACTOR MUST BE REPAIRED BY THE CONTRACTOR AT HIS/HER EXPENSE TO THE SATISFACTION OF THE OWNER OF SAID IMPROVEMENTS.
5. CONTRACTOR IS REQUIRED TO KEEP ALL CONSTRUCTION ACTIVITIES WITHIN THE APPROVED PROJECT LIMITS. THIS INCLUDES, BUT IS NOT LIMITED TO, VEHICLE AND EQUIPMENT STAGING, MATERIAL STORAGE AND LIMITS OF TRENCH EXCAVATION.
6. IT IS THE CONTRACTOR'S RESPONSIBILITY TO OBTAIN PERMISSION AND/OR EASEMENTS FROM THE APPROPRIATE GOVERNMENT AGENCY AND/OR INDIVIDUAL PROPERTY OWNER(S) FOR WORK OR STAGING OUTSIDE OF THE PROJECT LIMITS.
7. CONTRACTOR SHALL PROVIDE BARRICADES, SIGNS, FLASHERS, OTHER EQUIPMENT AND FLAG PERSONS NECESSARY TO INSURE THE SAFETY OF WORKERS AND VISITORS. ALL CONSTRUCTION SIGNING, BARRICADING, AND TRAFFIC DELINEATION SHALL CONFORM TO THE "MANUAL ON UNIFORM TRAFFIC CONTROL DEVICES", LATEST EDITION.
8. CONTRACTOR SHALL COMPLY WITH LOCAL NOISE ORDINANCE STANDARDS.
9. CONTRACTOR IS RESPONSIBLE FOR DUST CONTROL ACCORDING TO GOVERNING AGENCY STANDARDS.
10. CONTRACTOR SHALL TAKE ALL NECESSARY AND PROPER PRECAUTIONS TO PROTECT ADJACENT PROPERTIES FROM ANY AND ALL DAMAGE THAT MAY OCCUR FROM STORM WATER RUNOFF AND/OR DEPOSITION OF DEBRIS RESULTING FROM ANY AND ALL WORK IN CONNECTION WITH CONSTRUCTION. SUBMIT A STORM WATER POLLUTION PREVENTION PLAN, IF REQUIRED.
11. WORK IN PUBLIC STREETS, ONCE BEGUN, SHALL BE PROSECUTED TO COMPLETION WITHOUT DELAY AS TO PROVIDE MINIMUM INCONVENIENCE TO ADJACENT PROPERTY OWNERS AND TO THE TRAVELING PUBLIC.
12. CONTRACTOR SHALL PROVIDE ALL NECESSARY HORIZONTAL AND VERTICAL TRANSITIONS BETWEEN NEW CONSTRUCTION AND EXISTING SURFACES TO PROVIDE FOR PROPER DRAINAGE AND FOR INGRESS AND EGRESS TO NEW CONSTRUCTION.
13. NATURAL VEGETATION AND SOIL COVER SHALL NOT BE DISTURBED PRIOR TO ACTUAL CONSTRUCTION OF A REQUIRED FACILITY OR IMPROVEMENT. MASS CLEARING OF THE SITE IN ANTICIPATION OF CONSTRUCTION SHALL BE AVOIDED. CONSTRUCTION TRAFFIC SHALL BE LIMITED TO ONE APPROACH TO THE SITE. THE APPROACH SHALL BE DESIGNATED BY THE OWNER OR GOVERNING AGENCY.
14. THE CONTRACTOR SHALL TAKE REASONABLE MEASURE TO PROTECT EXISTING IMPROVEMENTS FROM DAMAGE AND ALL SUCH IMPROVEMENTS DAMAGED BY THE CONTRACTOR'S OPERATION SHALL BE REPAIRED OR RECONSTRUCTED TO THE ENGINEER/OWNER'S SATISFACTION AT THE EXPENSE OF THE CONTRACTOR.

1.5 GRADING / SOILS

1. CONTRACTOR SHALL SUBMIT A COMPACTION REPORT PREPARED BY A QUALIFIED REGISTERED SOILS ENGINEER, VERIFYING THAT ALL FILLED AREAS AND SUBGRADE AREAS WITH THE BUILDING PAD AREA AND AREAS TO BE PAVED, HAVE BEEN COMPACTED IN ACCORDANCE WITH THESE PLANS AND SPECIFICATIONS.
2. SITE CLEARING SHALL INCLUDE THE LOCATING AND REMOVAL OF ALL UNDERGROUND TANKS, PIPES, VALVES, ETC.
3. ALL EXISTING VALVES, MANHOLES, ETC. SHALL BE RAISED OR LOWERED TO GRADE AS REQUIRED.

1.6 UTILITIES

1. THE LOCATIONS OF UNDERGROUND FACILITIES SHOWN ON THESE PLANS ARE BASED ON FIELD SURVEYS AND LOCAL UTILITY COMPANY RECORDS. IT SHALL BE THE CONTRACTOR'S FULL RESPONSIBILITY TO CONTACT THE VARIOUS UTILITY COMPANIES EITHER DIRECT OR THROUGH BLUE STAKE TO LOCATE THEIR FACILITIES PRIOR TO STARTING CONSTRUCTION.
2. CONTRACTOR TO VERIFY BY POTHOLING BOTH THE VERTICAL AND HORIZONTAL LOCATION OF ALL EXISTING UTILITIES PRIOR TO INSTALLING ANY NEW LINES. NO ADDITIONAL COMPENSATION SHALL BE PAID TO THE CONTRACTOR FOR DAMAGE AND REPAIR TO THESE FACILITIES CAUSED BY HIS WORK FORCE.
3. CONTRACTOR MUST START AT LOW END OF ALL NEW GRAVITY UTILITY LINES. MECHANICAL SUB-CONTRACTOR MUST BE PROVIDED CIVIL SITE DRAWINGS FOR COORDINATION AND TO CHECK THE FLOW FROM THE LOWEST POINT IN BUILDING TO THE FIELD VERIFIED CONNECTION AT THE EXISTING MAIN. NO EXTRA COMPENSATION IS TO BE PAID TO THE CONTRACTOR FOR WORK HAVING TO BE REDONE DUE TO FAILURE TO COMPLY WITH THESE REQUIREMENTS.
4. CONTRACTOR IS TO VERIFY LOCATION, DEPTH, SIZE, TYPE, AND OUTSIDE DIAMETERS OF UTILITIES IN THE FIELD BY POTHOLING A MINIMUM OF 300 FEET AHEAD. PIPELINE CONSTRUCTION TO AVOID CONFLICTS WITH DESIGNED PIPELINE GRADE AND ALIGNMENT. EXISTING UTILITY INFORMATION SHOWN ON PLANS OR OBTAINED FROM UTILITY COMPANIES OR BLUE STAKED MUST BE ASSUMED AS APPROXIMATE, REQUIRING FIELD VERIFICATION.
5. CULINARY WATER AND FIRE SERVICE LINES TO BE CONSTRUCTED IN ACCORDANCE WITH LOCAL GOVERNING MUNICIPALITY STANDARDS AND SPECIFICATIONS.
6. SANITARY SEWER MAINS AND LATERALS TO BE CONSTRUCTED IN ACCORDANCE WITH LOCAL GOVERNING MUNICIPALITY SEWER DISTRICT STANDARDS AND SPECIFICATIONS.
7. STORM SEWER TO BE CONSTRUCTED IN ACCORDANCE WITH THE GOVERNING MUNICIPALITY STANDARDS AND SPECIFICATIONS.
8. ALL STORM DRAIN AND IRRIGATION CONDUITS SHALL BE INSTALLED WITH WATER TIGHT JOINTS AND CONNECTIONS.
9. ALL STORM DRAIN PIPE PENETRATIONS INTO BOXES SHALL BE CONSTRUCTED WITH WATER TIGHT SEALS ON THE OUTSIDE AND GROUTED SMOOTH WITH A NON-SHRINK GROUT ON THE INSIDE. CONDUITS SHALL BE CUT OFF FLUSH WITH THE INSIDE OF THE BOX.
10. NO CHANGE IN THE DESIGN OF UTILITIES AS SHOWN WILL BE MADE BY THE CONTRACTOR WITHOUT THE WRITTEN APPROVAL OF THE GOVERNING MUNICIPALITY, OR OTHER AUTHORITY HAVING JURISDICTION OVER THAT UTILITY.
11. ALL STORM DRAIN CONDUITS AND BOXES SHALL BE CLEAN AND FREE OF ROCKS, DIRT, AND CONSTRUCTION DEBRIS PRIOR TO FINAL INSPECTION.

1.8 SURVEY CONTROL

1. CONTRACTOR MUST PROVIDE A REGISTERED LAND SURVEYOR OR PERSONS UNDER THE SUPERVISION OF A REGISTERED LAND SURVEYOR TO SET STAKES FOR THE ALIGNMENT AND GRADE OF EACH MAIN AND/OR FACILITY AS SHOWN ON THE PLANS. THE STAKES SHALL BE MARKED WITH THE HORIZONTAL LOCATION (STATION) AND VERTICAL LOCATION (GRADE) WITH CUTS AND/OR FILLS TO THE APPROVED GRADE OF THE MAIN AND OR FACILITY AS SHOWN ON THE PLANS.
2. THE CONTRACTOR SHALL PROTECT ALL STAKES AND MARKERS FOR VERIFICATION PURPOSES.
3. CONTRACTOR WILL BE RESPONSIBLE FOR FURNISHING, MAINTAINING, OR RESTORING ALL MONUMENTS AND REFERENCE MARKS WITHIN THE PROJECT SITE.

1.9 AMERICAN DISABILITIES ACT

1. PEDESTRIAN / ADA ROUTES SHALL MEET THE FOLLOWING SPECIFICATIONS:
   *ROUTES SHALL HAVE A 2.00% (1:50) MAXIMUM CROSS SLOPE.
   *ROUTES SHALL HAVE A 5.00% (1:20) MAXIMUM RUNNING SLOPE.
   *RAMPS SHALL HAVE A 8.33% (1:12) MAXIMUM RUNNING SLOPE.
2. ADA PARKING STALLS AND ADJACENT ROUTES SHALL HAVE A 2.00% (1:50) MAXIMUM SURFACE SLOPE IN ANY DIRECTION.
3. THE CONTRACTOR SHALL ADHERE TO THE ABOVE SPECIFICATIONS. IN THE EVENT OF A DISCREPANCY IN THE CONSTRUCTION DOCUMENTS, THE CONTRACTOR SHALL NOTIFY THE ARCHITECT/ENGINEER PRIOR TO ANY CONSTRUCTION.

LEGEND

NEW	EXISTING		NEW	EXISTING	
		MONUMENT LINE			SECTION CORNER (FOUND)
		CENTER LINE			SECTION CORNER (NOT FOUND)
		SUBJECT PROPERTY LINE			
		ADJACENT PROPERTY LINE			STREET MONUMENT
		EASEMENT LINE			BRASS CAP MONUMENT
		DITCH FLOWLINE			POWER POLE
X	X	FENCE LINE			UTILITY POLE
ATMS	atms	ATMS CABLE	GUY	GUY	GUY ANCHOR
TV	tv	CABLE TV LINE	TRANS	TRANS	POWER TRANSFORMER
C	c	COMMUNICATIONS LINE			TRAFFIC SIGNAL CABINET
FO	fo	FIBER-OPTIC CABLE			LIGHT POLE
F	f	FIRE LINE	TR	TR	TELEPHONE RISER
IRR	irr	IRRIGATION LINE	T	T	TELEPHONE MANHOLE
G	g	NATURAL GAS LINE			TRAFFIC SIGNAL BOX
OHC	ohc	OVERHEAD COMMUNICATIONS	W	W	WATER MANHOLE
OHP	ohp	OVERHEAD POWER LINE			WATER VALVE
OHT	oht	OVERHEAD TELEPHONE LINE	WM	WM	WATER METER
OHTV	ohtv	OVERHEAD TELEVISION LINE			FIRE HYDRANT
P	p	POWER LINE	S	S	SANITARY SEWER MANHOLE
P/C	p/c	POWER/COMMUNICATIONS LINE	SSCO	SSCO	SANITARY SEWER CLEANOUT
P/T	p/t	POWER/TELEPHONE LINE	SD	SD	STORM DRAIN MANHOLE
P/T/C	p/t/c	POWER/TELE/COMM LINE			STORM DRAIN CURB INLET
RD	rd	ROOF DRAIN LINE			STORM DRAIN CATCH BASIN
SW	sw	SECONDARY WATER LINE	SD	SD	STORM DRAIN CLEANOUT
S	s	SANITARY SEWER LINE			STORM DRAIN COMBO BOX
ST	st	STEAM LINE	MB	MB	MAILBOX
SD	sd	STORM DRAIN LINE			SIGN
T	t	TELEPHONE LINE			FLOW DIRECTION
T/C	t/c	TELEPHONE/COMM LINE	44.00 TOC	44.00 EX TOC	SPOT ELEVATION
UD	ud	UNDERDRAIN			CONIFEROUS TREE
UGC	ugc	UNDERGROUND COMMUNICATIONS			DECIDUOUS TREE
UGP	ugp	UNDERGROUND POWER LINE			
UGT	ugt	UNDERGROUND TELEPHONE LINE			
UGTV	ugtv	UNDERGROUND TELEVISION			
W	w	WATER LINE			
72	572	CONTOUR LINE			
		CURB & GUTTER (STD)			
		CURB & GUTTER (OUTFALL)			

ABBREVIATIONS

AC	ACRE	DIP	DUCTILE IRON PIPE	GM	GAS METER	PCC	POINT OF COMPOUND CURVE
ADA	AMERICANS WITH DISABILITIES ACT	DTREE	DECIDUOUS TREE	GMH	GAS MANHOLE	PI	POINT OF INTERSECTION
ATMS	ADVANCED TRAFFIC MGMT. SYSTEM	DYL	DOUBLE YELLOW LINE	GUY	GUY WIRE	PM	PARKING METER
B&C	BAR & CAP	E	EAST	GV	GAS VALVE	PP	POWER POLE
BC	BUILDING CORNER	EB	ELECTRIC BOX	HDPE	HIGH DENSITY POLYETHYLENE	PRC	POINT OF REVERSE CURVE
BFG	BOTTOM FINISH GRADE	EGL	ENERGY GRADE LINE	HG	HEADGATE	PRK	PARKING STRIPE
BLUE	BLUE STAKED ELECTRIC	ELEV	ELEVATION	HGL	HYDRAULIC GRADE LINE	POC	POINT OF CONNECTION
BLUFO	BLUE STAKED FIBER OPTIC	EM	ELECTRIC METER	HP	HIGH POINT	PT	POINT OF TANGENCY
BLUG	BLUE STAKED NATURAL GAS	EMH	ELECTRIC MANHOLE	HW	HEADWALL or HIGH WATER	PWR	POWER
BLUIRR	BLUE STAKED IRRIGATION	EOA	EDGE OF ASPHALT	HWY	HIGHWAY	PVC	POLYVINYL CHLORIDE PIPE
BLUSD	BLUE STAKED STORM DRAIN	EOC	EDGE OF CONCRETE	ICO	IRRIGATION CLEANOUT	R	RANGE
BLUSS	BLUE STAKED SANITARY SEWER	EOG	EDGE OF GRAVEL	ICV	IRRIGATION CONTROL VALVE	RCP	REINFORCED CONCRETE PIPE
BLUT	BLUE STAKED TELEPHONE	EOL	EDGE OF LAWN	IE	INVERT ELEVATION	RD	ROOF DRAIN
BLUW	BLUE STAKED WATER	EX or EXIST	EXISTING	IRR	IRRIGATION	REV	REVISION
BM	BENCHMARK	F	FIRE	LF	LINEAR FEET	ROW	RIGHT-OF-WAY
BOF	BOTTOM OF FOOTING	FC	FOUNDATION CORNER	LIP	LIP OF GUTTER	RR	RAILROAD
BOB	BOTTOM OF BOX	FD	FOUND or FOUNDATION DRAIN	LP	LOW POINT or LIGHT POLE	S	SOUTH
BOL	BOLLARD	FDC	FIRE DEPT. CONNECTION	MAX	MAXIMUM	SAD	SEE ARCHITECTURAL DRAWINGS
BOT	BOTTOM	FDMN	FOUND MONUMENT	MIN	MINIMUM	SD	STORM DRAIN
BOV	BLOW-OFF VALVE	FDSC	FOUND SECTION CORNER	MON	MONUMENT	SDCB	STORM DRAIN CATCH BASIN
BOW	BACK OF WALK	FFE	FINISHED FLOOR ELEVATION	MP	METAL PIPE	SDCO	STORM DRAIN CLEOUNOUT BOX
BW	FINISH GRADE AT BOTTOM OF WALL	FG	FINISHED GRADE	MW	MONITORING WELL	SDMH	STORM DRAIN MANHOLE
℄	CENTERLINE	FH	FIRE HYDRANT	N	NORTH	SEC	SECTION
CATV	CABLE TELEVISION	FL	FLOW LINE	NG	NATURAL GROUND	SPECS	SPECIFICATIONS
CBR	CONCRETE BARRIER	FNC	FENCE	NGRET	NG AT RETAINING WALL	SL&M	SALT LAKE BASE & MERIDIAN
CC	CURB CUT	FNCCL	CHAIN LINK FENCE	NR	NAIL & RIBBON	SQ	SQUARE
COL	COLUMN	FNCIRN	IRON FENCE	NW	NAIL & WASHER	SQFT	SQUARE FEET
COMM	COMMUNICATIONS	FNCVYL	VINYL FENCE	NTS	NOT TO SCALE	SQYD	SQUARE YARD
CONC	CONCRETE	FNCWD	WOOD FENCE	OG	ORIGINAL GROUND	SS	SANITARY SEWER
CONST	CONSTRUCTION	FNCWR	WIRE FENCE	OH	OVERHANG	SSCO	SANITARY SEWER CLEANOUT
CMP	CORRUGATED METAL PIPE	FO	FIBER OPTIC	OHC	OVERHEAD COMMUNICATIONS	SSMH	SANITARY SEWER MANHOLE
CP	CONTROL POINT	FOW	FRONT OF WALK	OHP	OVERHEAD POWER	ST	STEAM
CTREE	CONIFEROUS TREE	FT	FEET	OHT	OVERHEAD TELEPHONE	STA	STATION
CUFT	CUBIC FOOT	G	NATURAL GAS	OHTV	OVERHEAD TELEVISION	STD	STANDARD
CUYD	CUBIC YARD	GAR	GARAGE	℞	PROPERTY LINE	STM	STORM
DEL	DELINEATOR	GB	GRADE BREAK	PB	POWER BOX	SYL	SOLID YELLOW LINE
DIA or Ø	DIAMETER	GL	GROUND LIGHT	PC	POINT OF CURVATURE	SWL	SOLID WHITE LINE

T	TOWNSHIP	TBC	TOP BACK OF CURB
TELE	TELEPHONE	TFC	TOP FACE OF CURB
TFG	TOP FINISH GRADE	TL	TREE LINE
TMH	TELEPHONE MANHOLE	TOA	TOP OF ASPHALT
TOC	TOP OF CONCRETE	TOF	TOP OF FOOTING
TOG	TOP OF GRATE	TOE	TOE OF SLOPE
TOP	TOP OF SLOPE or TOP OF PIPE	TOW	TOP OF WALL
TR	TELEPHONE RISER	TV	TELEVISION
TW	FINISH GRADE AT TOP OF WALL	TRANS	TRANSFORMER
TSP	TRAFFIC SIGNAL POLE	TSB	TRAFFIC SIGNAL BOX
UD	UNDERDRAIN	UGC	UNDERGROUND COMMUNICATIONS
UGP	UNDERGROUND POWER	UGT	UNDERGROUND TELEPHONE
UGTV	UNDERGROUND TELEVISION	U.N.O.	UNLESS NOTED OTHERWISE
UP	UTILITY POLE	VCP	VITRIFIED CLAY PIPE
VP	VERTICAL PIPE	W	WEST or WATER
WM	WATER METER	WMH	WATER MANHOLE
WS	WATER SURFACE	WTR	WATER
WV	WATER VALVE	WW	WATERWAY

bhd ARCHITECTS
www.bhdarchitects.com
Phone 801.571.0010
Fax 801.571.0303
Toll Free 888.571.0010
65 East Wadsworth Park Drive
Suite 205 Draper, Utah 84020

PROFESSIONAL ENGINEER
05-29-25
No. 11988925-2202
DANIEL J. CANNING
STATE OF UTAH

McNEIL ENGINEERING
8610 South Sandy Parkway, Suite 200
Sandy, Utah 84070
801.255.7700 mcneilengineering.com

PROJECT NO: 25333

THE CHURCH OF JESUS CHRIST OF LATTER-DAY SAINTS

Nibley 6 & Nibley UT West Stake

Approx. 3410 South 1200 West, Nibley, Utah
41.670809, -111.860775

BHD #: 2403
County Parcel: 03:050:0016
Plan Series: Heritage 24
Owner #: 514.4728
Date: 29 May 2025

Drawing Issue and Revision Schedule

#	Date	Description
1	29 May 2025	Bid Documents

General Notes, Legend, and Abbreviations

C601

Printed: 29 May 2025 10:35 AM

LANDSCAPE SCHEDULE

SYMBOL	QTY.	COMMON NAME	BOTANICAL NAME	SIZE	WATER ZONE	DETAIL
DECIDUOUS TREES						
	24	QUEEN ELIZABETH HEDGE MAPLE	ACER CAMPESTRE 'EVELYN'	2" CAL.	LOW (1/2" EVERY 10-14 DAYS)	D/L501
	3	SNOWCLOUD SERVICEBERRY	AMELANCHIER LAEVIS 'SNOWCLOUD'	2" CAL	LOW (1/2" EVERY 10-14 DAYS)	D/L501
	9	PRAIRIE SENTINEL COMMON HACKBERRY	CELTIS OCCIDENTALIS 'JFS-KSU1' PRAIRIE SENTINEL®	2" CAL.	LOW (1/2" EVERY 10-14 DAYS)	D/L501
	27	SUMMER SPRITE LINDEN	TILIA CORDATA 'HALKA'	2" CAL	LOW (1/2" EVERY 10-14 DAYS)	D/L501
	16	GREEN VASE ZELKOVA	ZELKOVA SERRATA 'GREEN VASE'	2" CAL	LOW (1/2" EVERY 10-14 DAYS)	D/L5.01
EVERGREEN TREES						
	7	ROCKY MOUNTAIN JUNIPER	JUNIPERUS SCOPULORUM	5' HT.	VERY LOW (WATER TO ESTABLISH)	E/L5.01
	8	BONNY BLUE COLORADO BLUE SPRUCE	PICEA PUNGENS GLAUCA 'BONNY BLUE'	5' HT.	LOW (1/2" EVERY 10-14 DAYS)	E/L501
	5	PINYON PINE	PINUS EDULIS	5' HT.	VERY LOW (WATER TO ESTABLISH)	E/L501
SHRUBS						
	10	UTAH SERVICEBERRY	AMELANCHIER UTAHENSIS	5 GAL.	LOW (1/2" EVERY 10-14 DAYS)	B/L5.01
	27	KINNIKINNICK	ARCTOSTAPHYLOS UVA URSI 'MASSACHUSETTS'	5 GAL.	LOW (1/2" EVERY 10-14 DAYS)	B/L501
	90	ALPINE CARPET JUNIPER	JUNIPERUS COMMUNIS 'MONDAP'	5 GAL.	VERY LOW (WATER TO ESTABLISH)	B/L501
	21	SUMMER WINE NINEBARK	PHYSOCARPUS OPULIFOLIUS 'SEWARD'	5 GAL.	LOW (1/2" EVERY 10-14 DAYS)	B/L501
	76	PAWNEE BUTTES WESTERN SAND CHERRY	PRUNUS BESSEYI 'PAWNEE BUTTES'	5 GAL.	LOW (1/2" EVERY 10-14 DAYS)	B/L501
	30	LACETTE FRAGRANT SUMAC	RHUS AROMATICA 'FINE TEXTURED COMPACT SELECT A' PP 28669	5 GAL.	LOW (1/2" EVERY 10-14 DAYS)	B/L501
	72	GRO-LOW FRAGRANT SUMAC	RHUS AROMATICA 'GRO-LOW'	5 GAL.	LOW (1/2" EVERY 10-14 DAYS)	B/L5.01
	10	TIGER EYES SUMAC	RHUS TYPHINA 'BAILTIGER'	5 GAL.	LOW (1/2" EVERY 10-14 DAYS)	B/L501
	69	COMMON SNOWBERRY	SYMPHORICARPOS ALBUS	5 GAL.	LOW (1/2" EVERY 10-14 DAYS)	B/L501
ORNAMENTAL GRASSES						
	78	BLONDE AMBITION BLUE GRAMA GRASS	BOUTELOUA GRACILIS 'BLONDE AMBITION'	1 GAL.	LOW (1/2" EVERY 10-14 DAYS)	A/L501
	176	FOERSTER'S FEATHER REED GRASS	CALAMAGROSTIS X ACUTIFLORA 'KARL FOERSTER'	1 GAL.	LOW (1/2" EVERY 10-14 DAYS)	A/L501
	218	ATLAS FESCUE	FESTUCA MAIREI	1 GAL.	LOW (1/2" EVERY 10-14 DAYS)	A/L501
	138	SAPPHIRE BLUE OAT GRASS	HELICTOTRICHON SEMPERVIRENS 'SAPHIRSPRUDEL'	1 GAL.	LOW (1/2" EVERY 10-14 DAYS)	A/L501
PERENNIALS						
	70	STEPPSUNS SUNSET GLOW PENSTEMON	PENSTEMON PINIFOLIUS 'P019S'	1 GAL.	LOW (1/2" EVERY 10-14 DAYS)	B/L501

SYMBOL	QTY.	DESCRIPTION	INSTRUCTIONS	SIZE	SOURCE	DETAIL
BOULDERS						
	261	"SOUTHERN SUNSET" BOULDERS	BURY 1/3 THE DEPTH OF THE BOULDER INTO FINISH GRADE. DO NOT USE BOULDERS THAT ARE LESS THAN 24" DIAMETER. BOULDER SHALL BE WASHED AND FREE OF DIRT AND OTHER FOREIGN DEBRIS	2'-4' DIAMETER IN ALL DIRECTIONS	BOULDERS FROM BROWN'S CANYON QUARRY. CONTACT ONE SOURCE MATERIALS, ONESOURCEMATERIALS.COM, (385) 447-9374.	G/L501
LAWN						
	12,194 S.F.	"DESERT SAGE" LAWN SOD - TWCA CERTIFIED	INSTALL OVER MINIMUM 5" TOPSOIL LAYER.		CHANSHARE FARMS (866) SOD-EASY OR APPROVED EQUAL	H/L501
CRUSHED ROCK						
	28,130 S.F.	"SOUTHERN SUNSET" CRUSHED ROCK	INSTALLED A MINIMUM 5" DEEP. INSTALL OVER DEWITTS 4.1 WEED BARRIER FABRIC. CRUSHED ROCK SHALL BE FREE OF DIRT & OTHER FOREIGN DEBRIS.	3"-6" DIAMETER	ONE SOURCE MATERIALS, ONESOURCEMATERIALS.COM, (385) 447-9374 OR APPROVED EQUAL	F/L501
	28,131 S.F.	"BROWNS CANYON" CRUSHED ROCK	INSTALLED A MINIMUM 3" DEEP. INSTALL OVER DEWITTS 4.1 WEED BARRIER FABRIC. CRUSHED ROCK SHALL BE FREE OF DIRT & OTHER FOREIGN DEBRIS.	1-1/2" DIAMETER	ONE SOURCE MATERIALS, ONESOURCEMATERIALS.COM, (385) 447-9374 OR APPROVED EQUAL	F/L501
	1,416 S.F.	"ELSINORE" COBBLE	INSTALLED A MINIMUM 5" DEEP. INSTALL OVER DEWITTS 4.1 WEED BARRIER FABRIC. CRUSHED ROCK SHALL BE FREE OF DIRT & OTHER FOREIGN DEBRIS.	3"-6" DIAMETER	ONE SOURCE MATERIALS, ONESOURCEMATERIALS.COM, (385) 447-9374 OR APPROVED EQUAL	F/L501

ALWAYS PLANT ACCORDING TO CENTER POINT OF THE SYMBOL

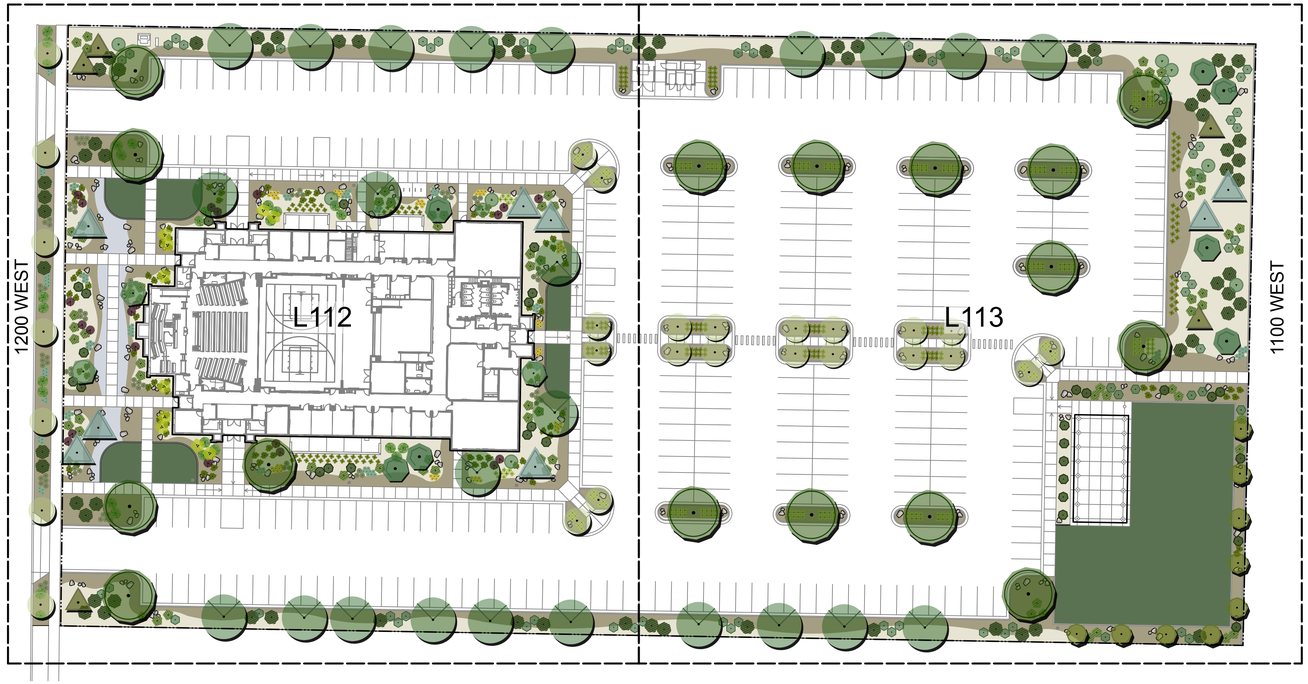

NIBLEY DEVELOPMENT CODE

CH. 19 : ZONING REGULATIONS

ZONED AS	RESIDENTIAL (R-2)	
TOTAL SITE AREA	222,637 S.F. = 5.1 AC.	
ON-SITE LANDSCAPE AREA	62,779 S.F.	
	REQUIRED	PROVIDED
YARDS:		
FRONT YARD	30'	YES
SIDE YARD (INTERIOR)	10'	YES
REAR YARD	25'	YES
REQURIED LANDSCAPE AREA WITHIN A YARD	60%	YES
LAWN IN FRONT & SIDE YARDS	50% MAX.	YES
PARKSTRIP:		
TREES - 1 PER 50'		YES

LANDSCAPE DATA

TOTAL SITE AREA	222,637 S.F.	% OF SITE/LANDSCAPE	% / # REQUIRED BY LOCAL JURISDICTION
TOTAL LANDSCAPE AREA	60,596 S.F.	27%	N/A
SHRUBS/GROUNDCOVER	16,310 S.F.	25%	N/A
LAWN AREA	12,194 S.F.	20%	50% MAX.
TREES ON SITE	92		N/A

PLANT COVERAGE

	SHRUBS - MATURE COVERAGE	ACTUAL %	TREE PURPOSE	ACTUAL %	% REQUIRED BY LOCAL JURISDICTION
STREET FRONTAGE	25% - 50%	26%	FRAME BUILDING	13%	N/A
PRIMARY ENTRIES	30% - 55%	58%	FRAME ENTRY	1%	
BUILDING PERIMETER	25% - 45%	45%	ACCENT BUILDING	14%	
PERIMETER	5% - 15%	20%	SCREEN LOT	39%	

0 30 60 90 ft

NORTH

AVOID CUTTING UNDERGROUND UTILITIES. IT'S COSTLY.
Call BEFORE YOU Dig
1-800-662-4111

NOTICE!
THE CONTRACTOR SHALL BE RESPONSIBLE FOR THE LOCATION, PROTECTION, AND RESTORATION OF ALL BURIED OR ABOVE GROUND UTILITIES, SHOWN OR NOT SHOWN ON THE PLANS.

Printed: 1 Apr 2025 10:44 AM

bhd ARCHITECTS
www.bhdarchitects.com
Phone 801.571.0010
Fax 801.571.0303
Toll Free 888.571.0010
65 East Wadsworth Park Drive
Suite 205 Draper, Utah 84020

STATE OF UTAH
05/28/2025
SCOTT A. SCHOONOVER
349757
LICENSED LANDSCAPE ARCHITECT

McNEIL ENGINEERING
Economic and Sustainable Design, Professionals You Know and Trust
8320 South Hardy Dr. • Sandy, Utah 84093 • (801) 255-7799
Civil Engineering • Land Planning & Landscape Architecture
Structural Engineering • Land Surveying & MDS

THE CHURCH OF JESUS CHRIST OF LATTER-DAY SAINTS

Nibley 6 &
Nibley UT West Stake

Approx. 3410 South 1200 West, Nibley, Utah
41.670809°, 111.840775

Owner #: 5144728
Plan Series: Heritage 24
County Parcel: 03.050.0016
BHD #: 2403
Date: 29 May 2025

Drawing Issue and Revision Schedule

#	Date	Description
1	29 May 2025	Bid Documents

LANDSCAPE PLANTING PLAN

L111

0 20 40 60 ft

NORTH

REFERENCE NOTES

L-1. CONCRETE MOWSTRIP
DETAIL I/L501

L-2. METAL EDGING
DETAIL J/L501

GENERAL NOTE

1. REFER TO SHEET L111 FOR LANDSCAPE SCHEDULE AND DATA TABLES

AVOID CUTTING UNDERGROUND UTILITIES. IT'S COSTLY.
Call BEFORE YOU Dig
1-800-662-4111

NOTICE!

THE CONTRACTOR SHALL BE RESPONSIBLE FOR THE LOCATION, PROTECTION, AND RESTORATION OF ALL BURIED OR ABOVE GROUND UTILITIES, SHOWN OR NOT SHOWN ON THE PLANS.

bhd ARCHITECTS
www.bhdarchitects.com
Phone 801.571.0010
Fax 801.571.0303
Toll Free 888.571.0010
65 East Wadsworth Park Drive
Suite 205 Draper, Utah 84020

STATE OF UTAH
05/28/2025
SCOTT A. SCHOONOVER
349757
LICENSED LANDSCAPE ARCHITECT

McNEIL ENGINEERING™
Economic and Sustainable Designs, Professionals You Know and Trust
8610 South Sandy Parkway, Suite 200 Sandy, Utah 84070 801.255.7700 mcneilengineering.com
Civil Engineering • Consulting & Landscape Architecture
Structural Engineering • Land Surveying & HDS

THE CHURCH OF JESUS CHRIST OF LATTER-DAY SAINTS

Nibley 6 & Nibley UT West Stake

Approx. 3410 South 1200 West, Nibley, Utah
41.670809, -111.860775

Date: 29 May 2025
BHD #: 2403
County Parcel: 03:050:0016
Plan Series: Heritage 24
Owner #: 514-4728

Drawing Issue and Revision Schedule

#	Date	Description
1	29 May 2025	Bid Documents

LANDSCAPE PLANTING PLAN

L112

Printed: 1 Apr 2025 10:44 AM

REFERENCE NOTES

L-1. CONCRETE MOWSTRIP
DETAIL I/L501

L-2. METAL EDGING
DETAIL J/L501

GENERAL NOTE

1. REFER TO SHEET L111 FOR LANDSCAPE SCHEDULE AND DATA TABLES

AVOID CUTTING UNDERGROUND UTILITIES. IT'S COSTLY.
Call
BEFORE YOU
Dig
1-800-662-4111

NOTICE!
THE CONTRACTOR SHALL BE RESPONSIBLE FOR THE LOCATION, PROTECTION, AND RESTORATION OF ALL BURIED OR ABOVE GROUND UTILITIES, SHOWN OR NOT SHOWN ON THE PLANS.

bhd ARCHITECTS
www.bhdarchitects.com
Phone 801.571.0010
Fax 801.571.0303
Toll Free 888.571.0010
65 East Wadsworth Park Drive
Suite 205 Draper, Utah 84020

STATE OF UTAH
05/28/2025
SCOTT A. SCHOONOVER
349757
LICENSED LANDSCAPE ARCHITECT

McNEIL ENGINEERING™
Economic and Sustainable Designs, Professionals You Know and Trust
8610 South Sandy Parkway, Suite 200 Sandy, Utah 84070 801.255.7700 mcneilengineering.com
Civil Engineering • Consulting & Landscape Architecture
Structural Engineering • Land Surveying & HDS

THE CHURCH OF
JESUS CHRIST
OF LATTER-DAY SAINTS

Nibley 6 & Nibley UT West Stake

Approx. 3410 South 1200 West, Nibley, Utah
41.670809, -111.860775

Date:	BHD #:	County Parcel:	Plan Series:	Owner #:
29 May 2025	2403	03:050:0016	Heritage 24	514-4728

Drawing Issue and Revision Schedule

#	Date	Description
1	29 May 2025	Bid Documents

LANDSCAPE PLANTING PLAN

L113

Printed: 1 Apr 2025 10:44 AM

IRRIGATION SCHEDULE

SYMBOL	TYPE	MANUFACTURER	MODEL	DETAIL
OUTLETS				
	MPR Fixed Nozzles	RAIN BIRD	1804-SAM-PRS-15H	A/L5.02
	MPR Fixed Nozzles	RAIN BIRD	1804-SAM-PRS-15Q	A/L5.02
	5000 Series 04in. Pop-Up MPR	RAIN BIRD	5004-PCR-25H	A/L5.02
	5000 Series 04in. Pop-Up MPR	RAIN BIRD	5004-PCR-25Q	A/L5.02
	5000 Series 04in. Pop-Up MPR	RAIN BIRD	5004-PCR-30F	A/L5.02
	5000 Series 04in. Pop-Up MPR	RAIN BIRD	5004-PCR-30H	A/L5.02
	5000 Series 04in. Pop-Up MPR	RAIN BIRD	5004-PCR-30Q	A/L5.02
	5000 Series 04in. Pop-Up MPR	RAIN BIRD	5004-PCR-30TQ	A/L5.02
DRIP AREAS				
	TREE DRIP RING W/ ROWS SPACED @ 24" APART	NETAFIM	TLCV9-12	I/L502
SYMBOL	**TYPE**	**MANUFACTURER**	**DESCRIPTION**	**DETAIL**
VALVES				
	LAWN CIRCUIT CONTROL VALVE	RAIN BIRD	100-PEB	E/L502
	DRIP CIRCUIT CONTROL VALVE	RAIN BIRD	XCZ-100-PRB-COM DRIP ZONE KIT WITH 100-PEB CONTROL VALVE AND BASKET FILTER WITH BUILT-IN PRV	F/L502
OTHER EQUIPMENT				
C	SMART CONTROLLER	HYDROPOINT	WEATHERTRAK ET PRO3	D/L503
POC	POINT OF CONNECTION			A/L504
	CONCRETE PAD FOR BACKFLOW PREVENTER			C/L504
SYMBOL	**TYPE**		**MATERIAL**	**DETAIL**
PIPE				
	1" DRIP SUPPLY LINE, 1/2" FUNNY PIPE AND EMITTERS NOT SHOWN ON PLAN FOR GRAPHIC CLARITY.		SCHEDULE 40 PVC PIPE WITH SCHEDULE 40 PVC FITTINGS.	C/L502
	1-1/2" MAIN LINE		SCHEDULE 40 PVC PIPE WITH SCHEDULE 80 PVC FITTINGS.	C/L502
	3/4" - 1-1/2" LATERAL LINE		SCHEDULE 40 PVC PIPE WITH SCHEDULE 40 PVC FITTINGS.	C/L502
	PIPE SLEEVE UNDER NEW PAVING		SCHEDULE 40 PVC	D/L502

— VALVE NUMBER
gpm — VALVE FLOW

EMITTER SCHEDULE

PLANT NAME	DRIP EMISSION DEVICE	MANUFACTURER	MODEL	DETAIL
BONNY BLUE COLORADO BLUE SPRUCE	TREE DRIP RING	NETAFIM	TLCV9-12	I/L502
GREEN VASE ZELKOVA	TREE DRIP RING	NETAFIM	TLCV9-12	I/L502
PINYON PINE	(2) 5-GPH Emitter	RAIN BIRD	PCT05 (BEIGE)	B/L503
PRAIRIE SENTINEL COMMON HACKBERRY	TREE DRIP RING	NETAFIM	TLCV9-12	I/L502
QUEEN ELIZABETH HEDGE MAPLE	TREE DRIP RING	NETAFIM	TLCV9-12	I/L502
ROCKY MOUNTAIN JUNIPER	(2) 5-GPH Emitter	RAIN BIRD	PCT05 (BEIGE)	B/L503
SNOWCLOUD SERVICEBERRY	TREE DRIP RING	NETAFIM	TLCV9-12	I/L502
SUMMER SPRITE LINDEN	TREE DRIP RING	NETAFIM	TLCV9-12	I/L502
ALPINE CARPET JUNIPER	(1) 2-GPH Emitter	RAIN BIRD	XBT20 (RED)	A/L503
ATLAS FESCUE	(1) 1-GPH Emitter	RAIN BIRD	XBT10 (BLACK)	A/L503
BLONDE AMBITION BLUE GRAMA GRASS	(1) 1-GPH Emitter	RAIN BIRD	XBT10 (BLACK)	A/L503
COMMON SNOWBERRY	(1) 2-GPH Emitter	RAIN BIRD	XBT20 (RED)	A/L503
FOERSTER'S FEATHER REED GRASS	(1) 2-GPH Emitter	RAIN BIRD	XBT20 (RED)	A/L503
GRO-LOW FRAGRANT SUMAC	(1) 2-GPH Emitter	RAIN BIRD	XBT20 (RED)	A/L503
KINNIKINNICK	(1) 2-GPH Emitter	RAIN BIRD	XBT20 (RED)	A/L503
LACETTE FRAGRANT SUMAC	(1) 2-GPH Emitter	RAIN BIRD	XBT20 (RED)	A/L503
PAWNEE BUTTES WESTERN SAND CHERRY	(1) 2-GPH Emitter	RAIN BIRD	XBT20 (RED)	A/L503
SAPPHIRE BLUE OAT GRASS	(1) 1-GPH Emitter	RAIN BIRD	XBT10 (BLACK)	A/L503
STEPPSUNS SUNSET GLOW PENSTEMON	(1) 1-GPH Emitter	RAIN BIRD	XBT10 (BLACK)	A/L503
SUMMER WINE NINEBARK	(1) 2-GPH Emitter	RAIN BIRD	XBT20 (RED)	A/L503
TIGER EYES SUMAC	(1) 5-GPH Emitter	RAIN BIRD	PCT05 (BEIGE)	A/L503
UTAH SERVICEBERRY	(1) 5-GPH Emitter	RAIN BIRD	PCT05 (BEIGE)	A/L503

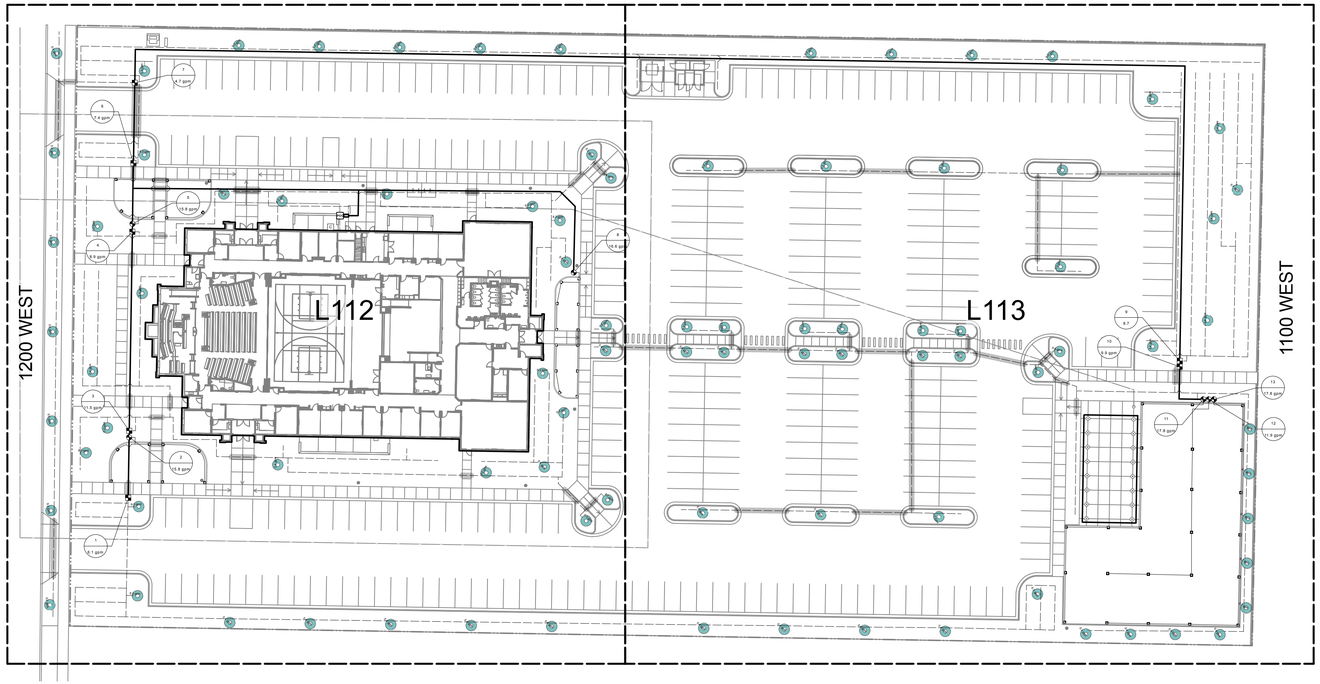

0 30 60 90 ft

NORTH

AVOID CUTTING UNDERGROUND UTILITIES. IT'S COSTLY.
Call BEFORE YOU Dig
1-800-662-4111

NOTICE!
THE CONTRACTOR SHALL BE RESPONSIBLE FOR THE LOCATION, PROTECTION, AND RESTORATION OF ALL BURIED OR ABOVE GROUND UTILITIES, SHOWN OR NOT SHOWN ON THE PLANS.

bhd ARCHITECTS
www.bhdarchitects.com
Phone 801.571.0010
Fax 801.571.0303
Toll Free 888.571.0010
65 East Wadsworth Park Drive
Suite 205 Draper, Utah 84020

STATE OF UTAH
05/28/2025
SCOTT A. SCHOONOVER
349757
LICENSED LANDSCAPE ARCHITECT

McNEIL ENGINEERING
Economic and Sustainable Design, Professionals You Know and Trust
8833 South Redwood Road, West Jordan, Utah 84088 (801) 255-3101 FAX (801) 255-1709
Civil Engineering • Land Planning • Landscape Architecture
Structural Engineering • Land Surveying & MDS

THE CHURCH OF JESUS CHRIST OF LATTER-DAY SAINTS

Nibley 6 &
Nibley UT West Stake

Approx. 3410 South 1200 West, Nibley, Utah
41.670809, -111.840775

BHD #: 2403
County Parcel: 03:050:0016
Plan Series: Heritage 24
Owner #: 514.4728
Date: 29 May 2025

Drawing Issue and Revision Schedule

#	Date	Description
1	29 May 2025	Bid Documents

Landscape Irrigation Plan

L121

Printed: 1 Apr 2025 10:44 AM

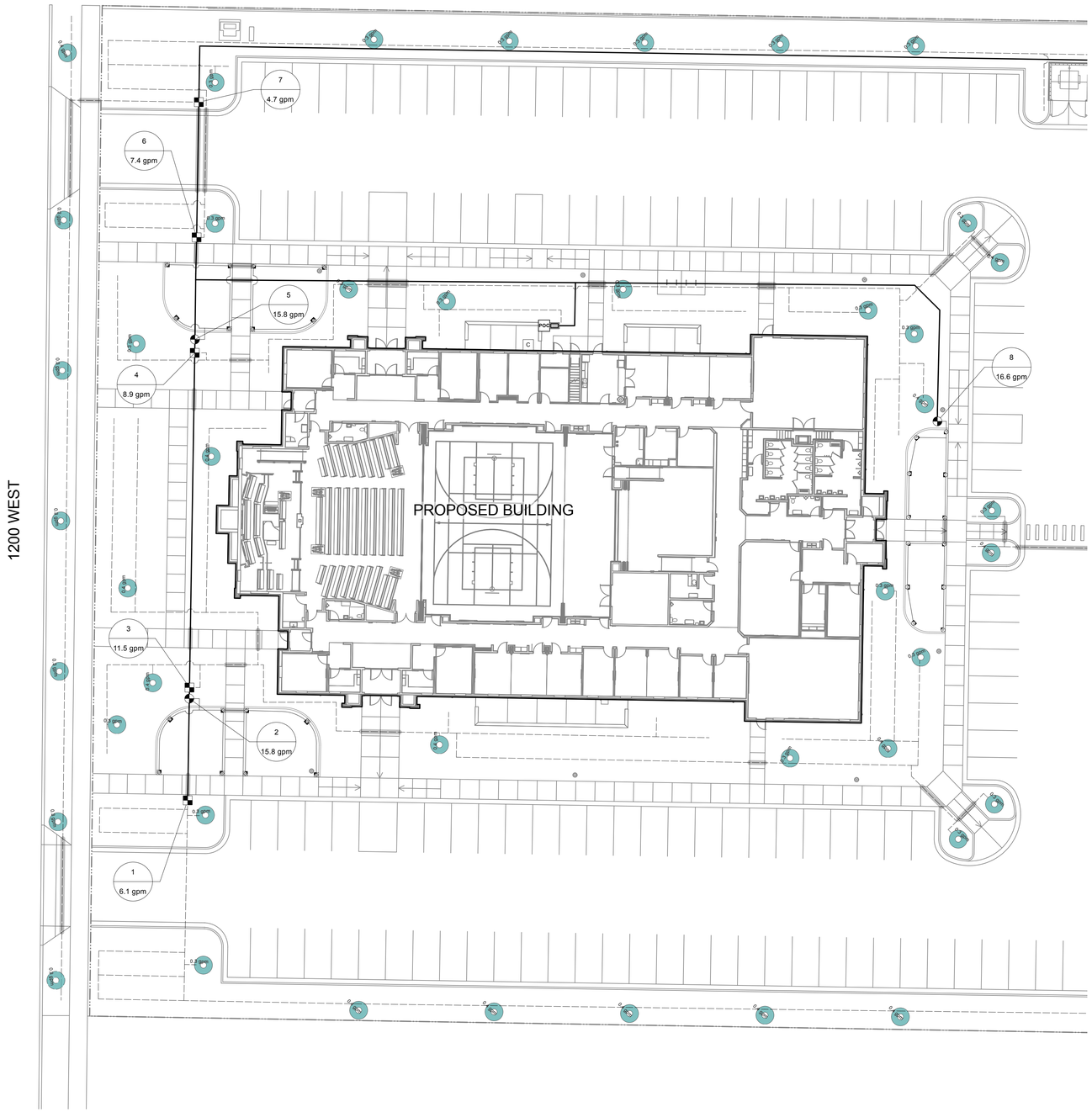

GENERAL NOTE

1. REFER TO SHEET L121 FOR IRRIGATION & EMITTER SCHEDULES

AVOID CUTTING UNDERGROUND UTILITIES. IT'S COSTLY.
Call BEFORE YOU Dig
1-800-662-4111

NOTICE!
THE CONTRACTOR SHALL BE RESPONSIBLE FOR THE LOCATION, PROTECTION, AND RESTORATION OF ALL BURIED OR ABOVE GROUND UTILITIES, SHOWN OR NOT SHOWN ON THE PLANS.

bhd ARCHITECTS
www.bhdarchitects.com
Phone 801.571.0010
Fax 801.571.0303
Toll Free 888.571.0010
65 East Wadsworth Park Drive
Suite 205 Draper, Utah 84020

STATE OF UTAH
05/28/2025
SCOTT A. SCHOONOVER
349757
LICENSED LANDSCAPE ARCHITECT

McNEIL ENGINEERING
Civil Engineering • Consulting & Landscape Architecture
Structural Engineering • Land Surveying & HDS

THE CHURCH OF
JESUS CHRIST
OF LATTER-DAY SAINTS

Nibley 6 &
Nibley UT West Stake

Approx. 3410 South 1200 West, Nibley, Utah
41.670809, -111.860775

Date:	BHD #:	County Parcel:	Plan Series:	Owner #:
29 May 2025	2403	03:050:0016	Heritage 24	514-4728

Drawing Issue and Revision Schedule

#	Date	Description
1	29 May 2025	Bid Documents

LANDSCAPE PLANTING PLAN

L122

Printed: 1 Apr 2025 10:44 AM

GENERAL NOTE

1. REFER TO SHEET L121 FOR IRRIGATION & EMITTER SCHEDULES

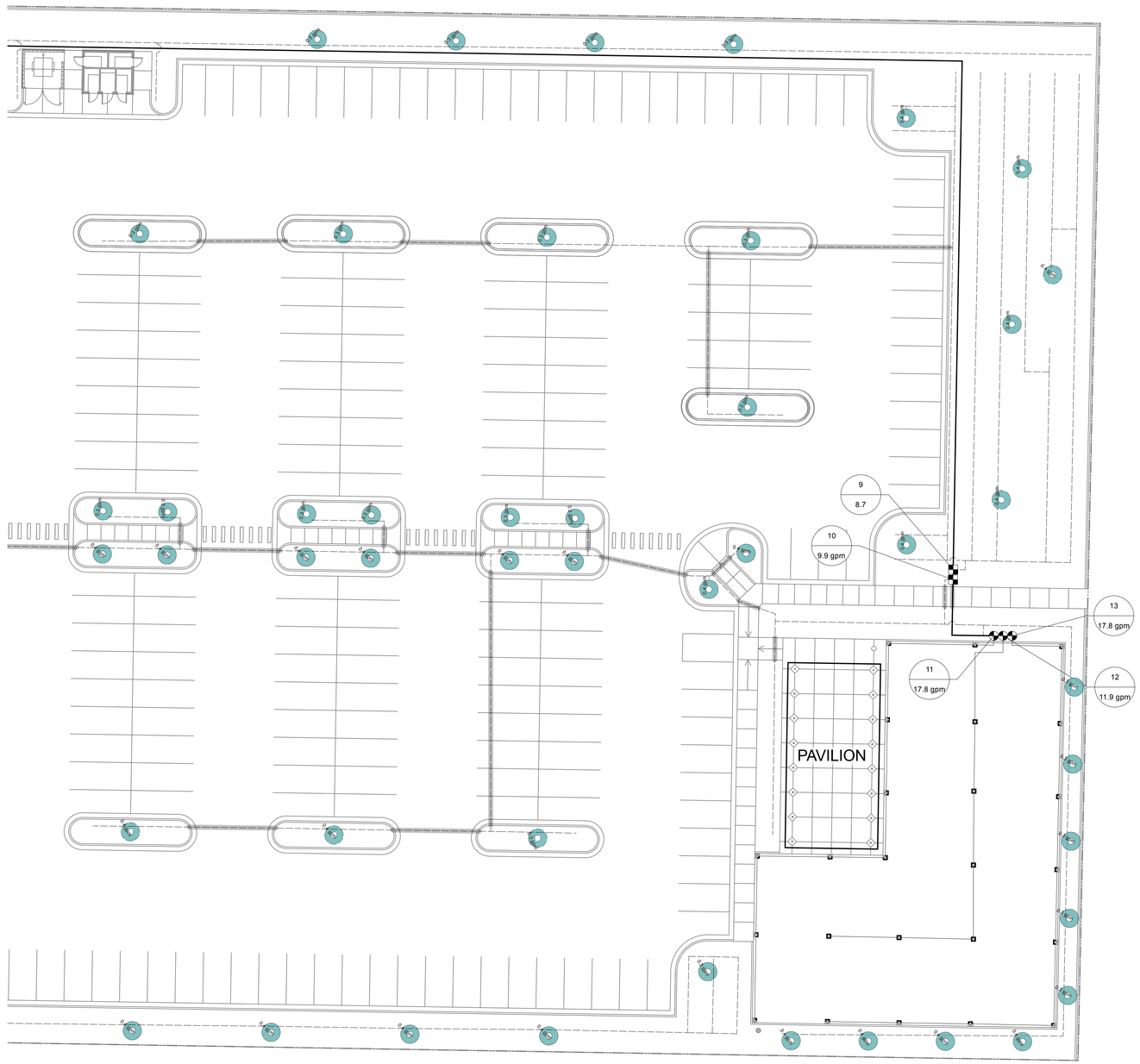

0 20 40 60 ft

NORTH

AVOID CUTTING UNDERGROUND UTILITIES. IT'S COSTLY.
Call BEFORE YOU Dig
1-800-662-4111

NOTICE!

THE CONTRACTOR SHALL BE RESPONSIBLE FOR THE LOCATION, PROTECTION, AND RESTORATION OF ALL BURIED OR ABOVE GROUND UTILITIES, SHOWN OR NOT SHOWN ON THE PLANS.

Printed: 1 Apr 2025 10:44 AM

bhd ARCHITECTS
www.bhdarchitects.com
Phone 801.571.0010
Fax 801.571.0303
Toll Free 888.571.0010
65 East Wadsworth Park Drive
Suite 205 Draper, Utah 84020

STATE OF UTAH
05/28/2025
SCOTT A. SCHOONOVER
349757
LICENSED LANDSCAPE ARCHITECT

McNEIL ENGINEERING
Economic and Sustainable Designs, Professionals You Know and Trust
8815 South Sandy Parkway, Suite 200 Sandy, Utah 84070 801.253.7700 mcneilengineering.com
Civil Engineering • Consulting & Landscape Architecture
Structural Engineering • Land Surveying & HDS

THE CHURCH OF
JESUS CHRIST
OF LATTER-DAY SAINTS

Nibley 6 &
Nibley UT West Stake

Approx. 3410 South 1200 West, Nibley, Utah
41.670809, -111.860775

Date:	BHD #:	County Parcel:	Plan Series:	Owner #:
29 May 2025	2403	03:050:0016	Heritage 24	514-4728

Drawing Issue and Revision Schedule

#	Date	Description
1	29 May 2025	Bid Documents

LANDSCAPE PLANTING PLAN

L123

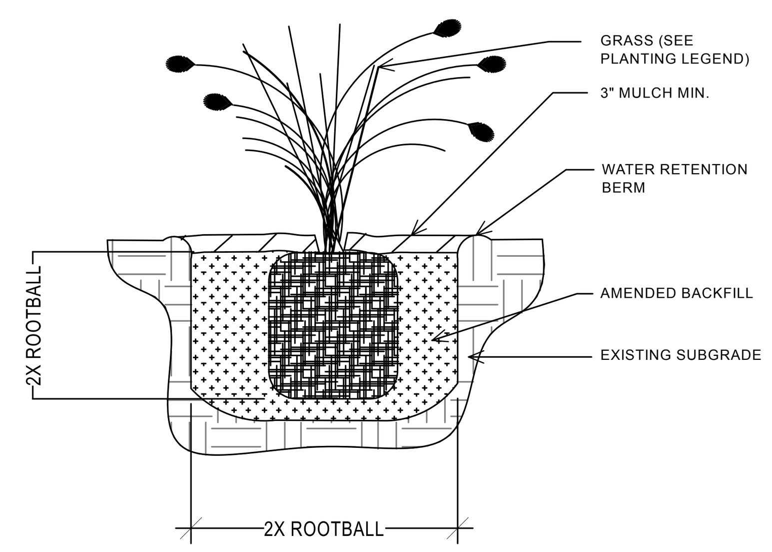

A ORNAMENTAL GRASSES PLANTING
NOT TO SCALE

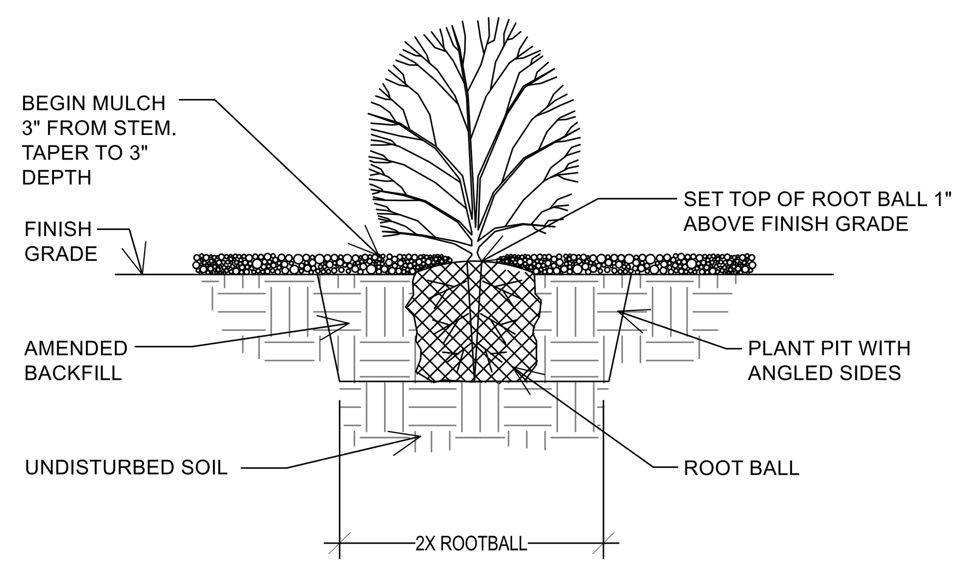

B SHRUB PLANTING
NOT TO SCALE

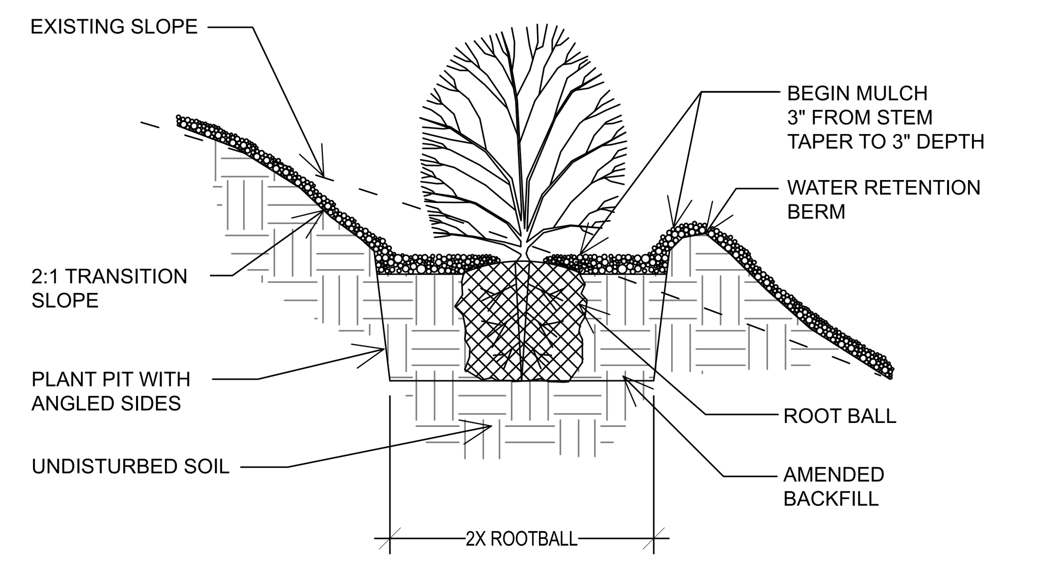

C PLANTING ON SLOPE
NOT TO SCALE

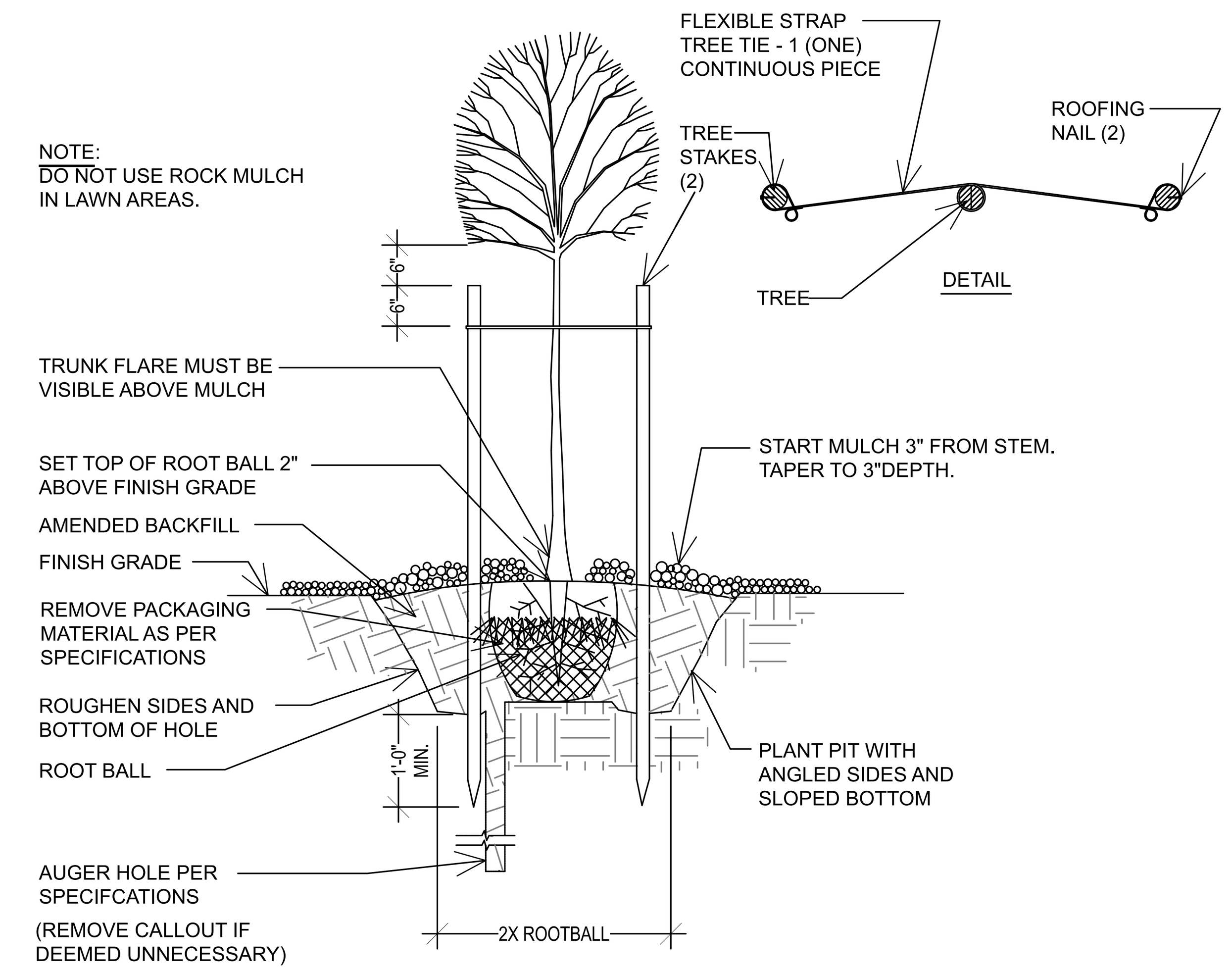

D TREE PLANTING AND STAKING
NOT TO SCALE

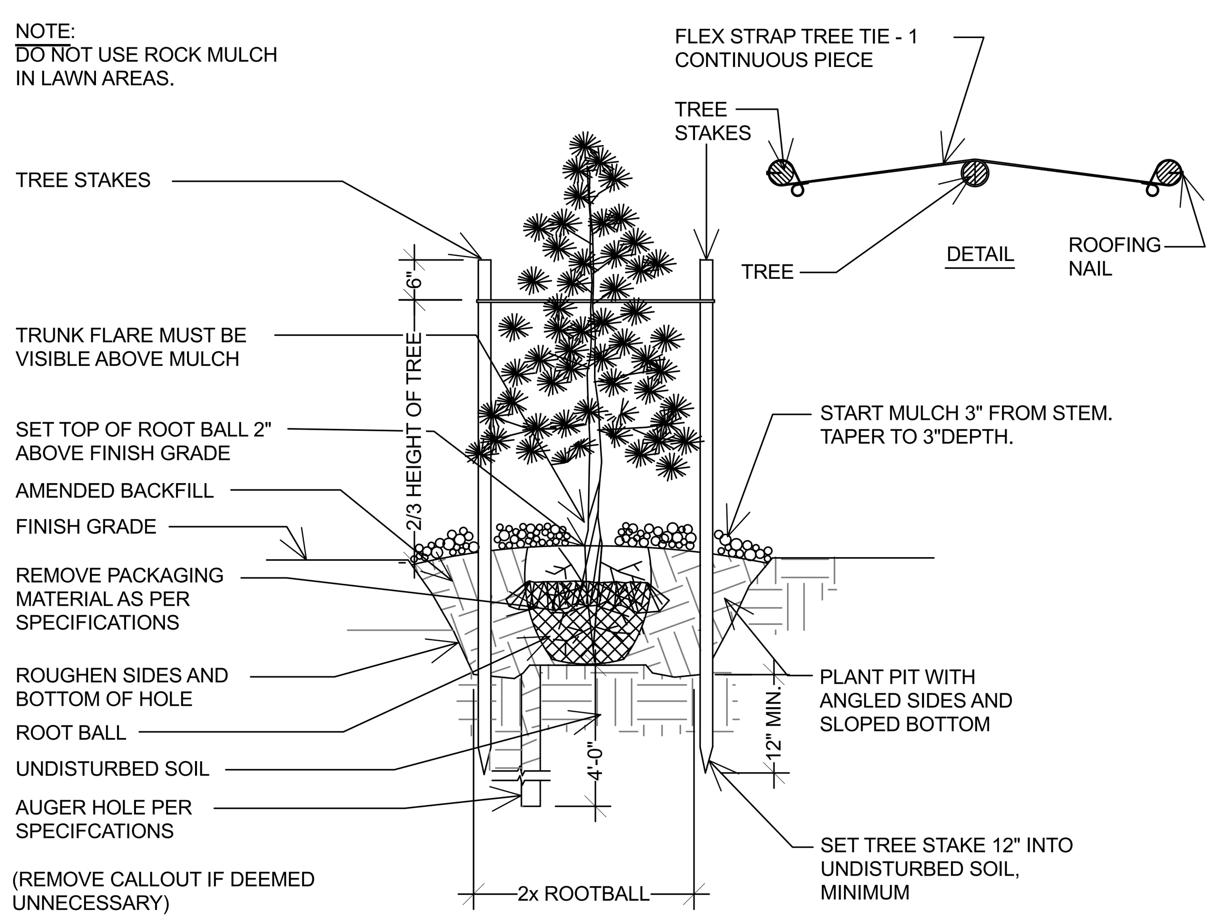

E CONIFER PLANTING AND STAKING
NO SCALE

NOTES:

1. APPLY PRE-EMERGENT HERBICIDE TO SHRUB AND GROUND COVER PLANTING AREAS AND GRASS-FREE AREAS AT TREES IN LAWN PRIOR TO PLACEMENT OF WEED BARRIER FABRIC AND MULCH.
2. PRE-EMERGENT SHALL BE "SURFLAN AS" (LIQUID) BY UNITED PHOSPHORUS INC, TRENTON, NJ, OR APPROVED EQUAL.
3. INSTALL MULCH TO UNIFORM DEPTH AND RAKE TO NEAT FINISHED APPEARANCE FREE OF HUMPS AND DEPRESSIONS.

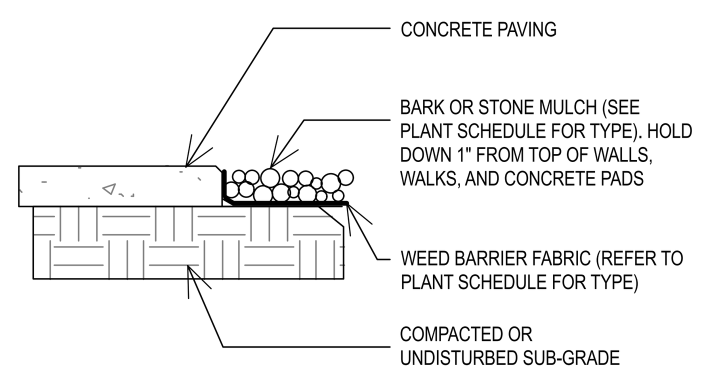

F MULCH
NO SCALE

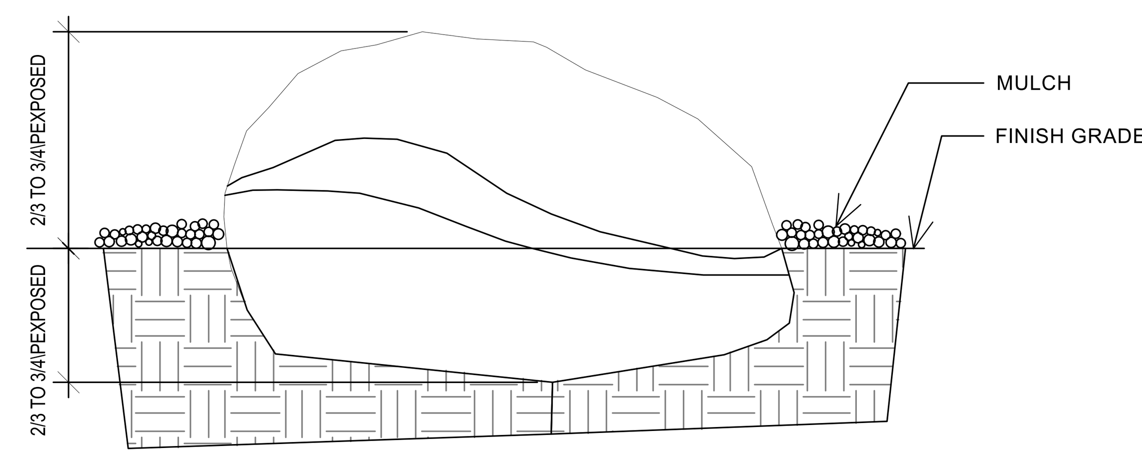

G BOULDER PLACEMENT DETAIL
NO SCALE

NOTES:

A. LAYING OF SOD:
   1. LAY SOD DURING GROWING SEASON AND WITHIN 48 HOURS OF BEING LIFTED.
   2. LAY SOD WHILE TOP 6 INCHES OF SOIL IS DAMP, BUT NOT MUDDY. SODDING DURING FREEZING TEMPERATURES OR OVER FROZEN SOIL IS NOT ACCEPTABLE.
   3. LAY SOD IN ROWS PERPENDICULAR TO SLOPE WITH JOINTS STAGGERED. BUTT SECTIONS CLOSELY WITHOUT OVERLAPPING OR LEAVING GAPS BETWEEN SECTIONS. CUT OUT IRREGULAR OR THIN SECTIONS WITH A SHARP KNIFE.
   4. LAY SOD FLUSH WITH ADJOINING EXISTING SODDED SURFACES.
   5. DO NOT SOD SLOPES STEEPER THAN 3:1. CONSULT WITH ARCHITECT FOR ALTERNATE TREATMENT.
B. AFTER LAYING OF SOD IS COMPLETE:
   1. ROLL HORIZONTAL SURFACE AREAS IN TWO DIRECTIONS PERPENDICULAR TO EACH OTHER.
   2. REPAIR AND RE-ROLL AREAS WITH DEPRESSIONS, LUMPS, OR OTHER IRREGULARITIES. HEAVY ROLLING TO CORRECT I RREGULARITIES IN GRADE WILL NOT BE PERMITTED.
   3. WATER SODDED AREAS IMMEDIATELY AFTER LAYING SOD TO OBTAIN MOISTURE PENETRATION THROUGH SOD INTO TOP 6 NCHES OF TOPSOIL.

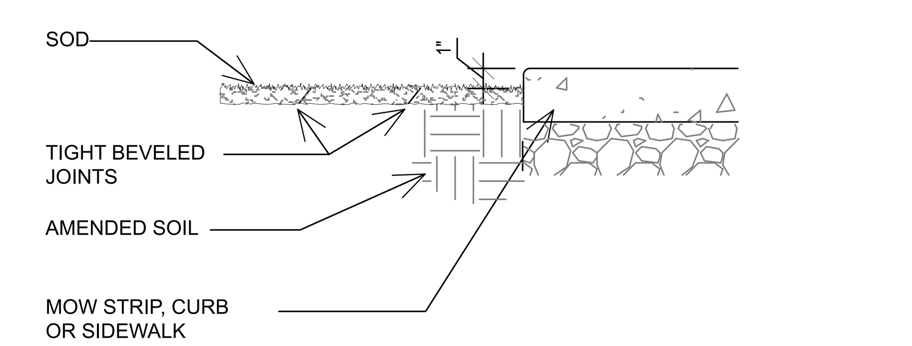

H SOD INSTALLATION
NO SCALE

NOTES:

1. MOW STRIP TO BE 4,500 PSI CONCRETE WITH 6% AIR ± 1 1/2.
2. INSTALL EXPANSION AND CONTROL JOINTS AS PER SPECIFICATIONS.
3. PROVIDE POSITIVE DRAINAGE AROUND MOW STRIPS. DO NOT CREATE A DAM EFFECT WITH PLACEMENT OF MOW STRIP.
4. MAXIMUM 1/2" WIDTH VARIATION.
5. FOLLOW LAYOUT PLAN PRECISELY AS SHOWN ON MOW STRIP/EDGING DIMENSION PLAN.
6. RAISE THE LAWN GRADE 1" WHEN SEEDING.

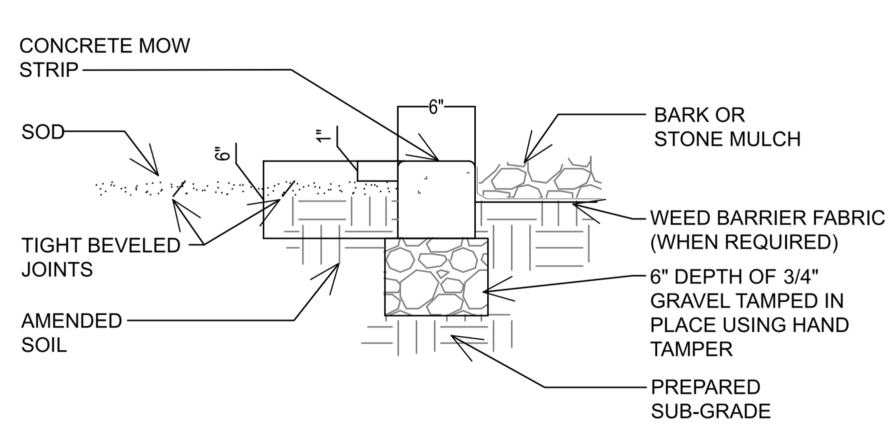

I CONCRETE MOW STRIP
SCALE:

NOTE:

EDGING SHALL BE COL-MET COMMERCIAL EDGING WITH BLACK POWDER COATING FINISH. MINIMUM 16" LONG STAKES - 4 STAKES PER 10'-0" SECTION.

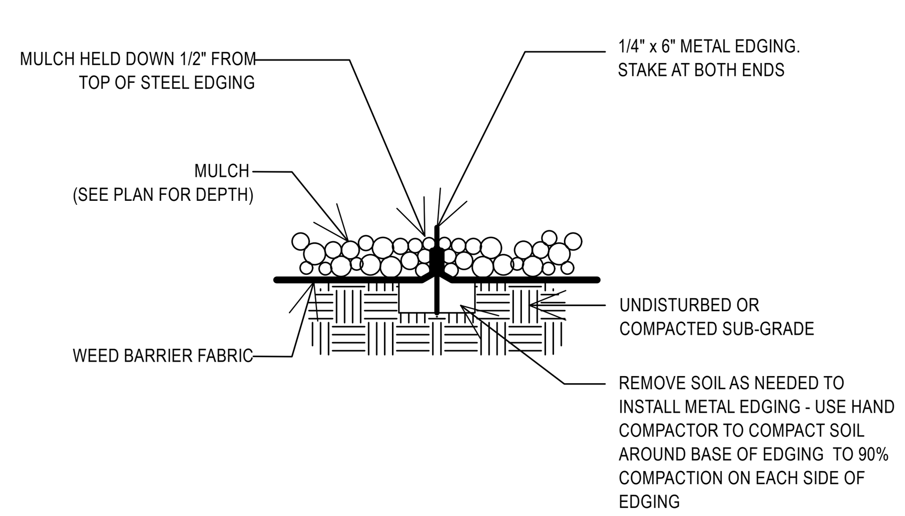

J METAL EDGING
NO SCALE

Printed: 1 Apr 2025 10:44 AM

bhd ARCHITECTS
www.bhdarchitects.com
Phone 801.571.0010
Fax 801.571.0303
Toll Free 888.571.0010
65 East Wadsworth Park Drive Suite 205 Draper, Utah 84020

05/28/2025 SCOTT A. SCHOONOVER 349757 LICENSED LANDSCAPE ARCHITECT STATE OF UTAH

McNEIL ENGINEERING
Civil Engineering • Consulting & Landscape Architecture
Structural Engineering • Land Surveying & HDS

THE CHURCH OF JESUS CHRIST OF LATTER-DAY SAINTS

Nibley 6 & Nibley UT West Stake
Approx. 3410 South 1200 West, Nibley, Utah
41.670809, -111.860775

Date:	BHD #:	County Parcel:	Plan Series:	Owner #:
29 May 2025	2403	03-050-0016	Heritage 24	514-4728

Drawing Issue and Revision Schedule

#	Date	Description
1	29 May 2025	Bid Documents

LANDSCAPE PLANTING DETAILS

L501

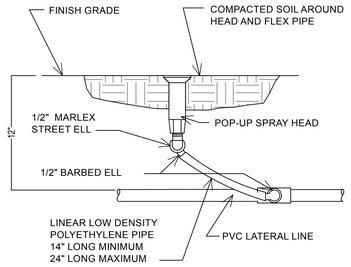

A SPRAY AND ROTARY HEAD ASSEMBLY

NO SCALE

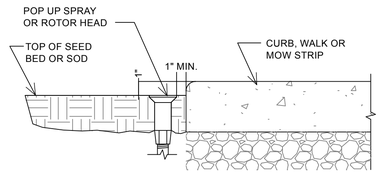

B SPRINKLER HEAD OR ROTOR NEXT TO CURB OR WALK

NO SCALE

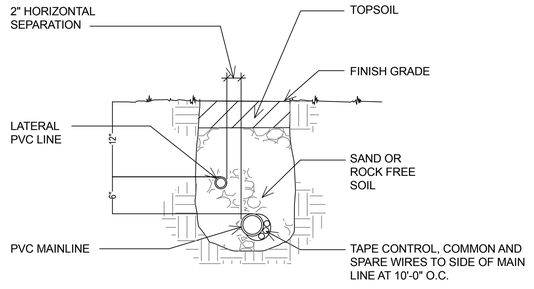

C TRENCH SECTION - CONVENTIONAL WIRE SYSTEM

NO SCALE

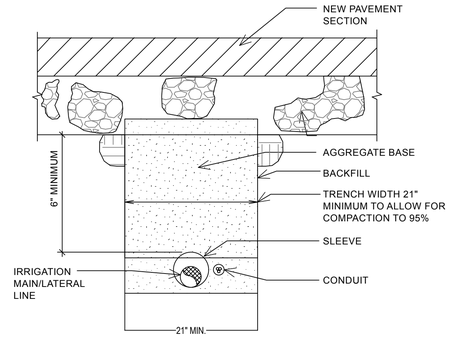

D MISC. PIPE TRENCH DETAIL NEW PAVEMENT AREAS

NO SCALE

NOTES:
1. LIMIT 1 VALVE PER BOX.
2. 10" MIN. LATERAL LINE DEPTH AT VALVE BOX, 12" MIN. LATERAL LINE DEPTH EVERYWHERE ELSE.
3. PROVIDE MIN. 2" CLEARANCE BETWEEN WIRE AND CMU BLOCK.

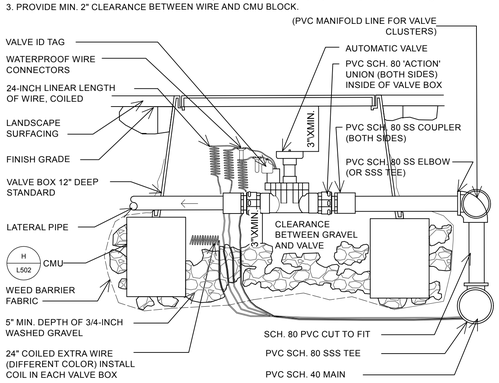

E AUTOMATIC VALVE WITH CONVENTIONAL WIRE SYSTEM

NO SCALE

NOTES:
1. LIMIT 1 VALVE PER BOX.
2. 10" MIN. LATERAL LINE DEPTH AT VALVE BOX, 12" MIN. LATERAL LINE DEPTH EVERYWHERE ELSE.
3. PROVIDE MIN. 2" CLEARANCE BETWEEN WIRE AND CMU BLOCK.

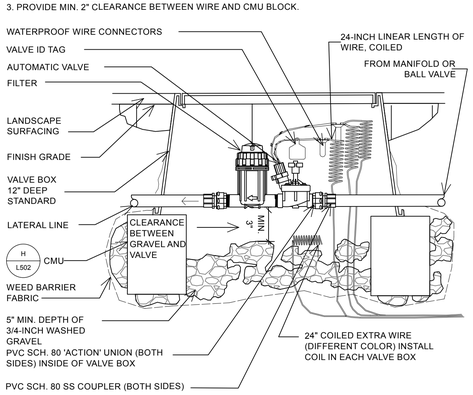

F DRIP VALVE ASSEMBLY-SECTION CONVENTIONAL WIRE SYSTEM

NO SCALE

NOTE:
1. IF BALL VALVE IS INCLUDED WITH DRIP ZONE KIT, INCLUDE ENTIRE KIT WITHIN ONE BOX. REMOVE ROUND BOX. IF BALL VALVE IS PURCHASED SEPARATELY, INSTALL AS SHOWN, OR AS PER C/L502 FOR MULTIPLE DRIP VALVE ASSEMBLY.
2. WIRING NOT SHOWN. INSTALL AS PER CONVENTIONAL OR TWO-WIRE AUTOMATIC VALVE SECTIONS

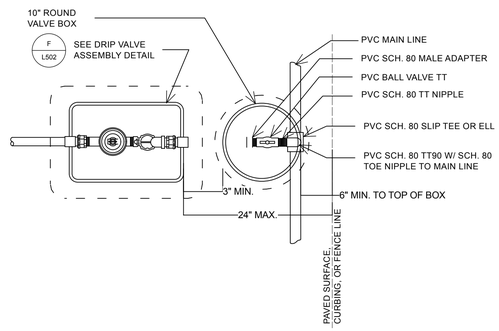

G DRIP VALVE ASSEMBLY

NO SCALE

NOTES:
1. VALVE BOX TO REST ON (4) CMU BLOCKS (ONE FOR EACH SIDE).
2. CLUSTERED VALVE BOXES MAY SHARE A CMU BLOCK.

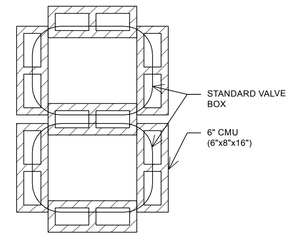

H CMU PLACEMENT

NO SCALE

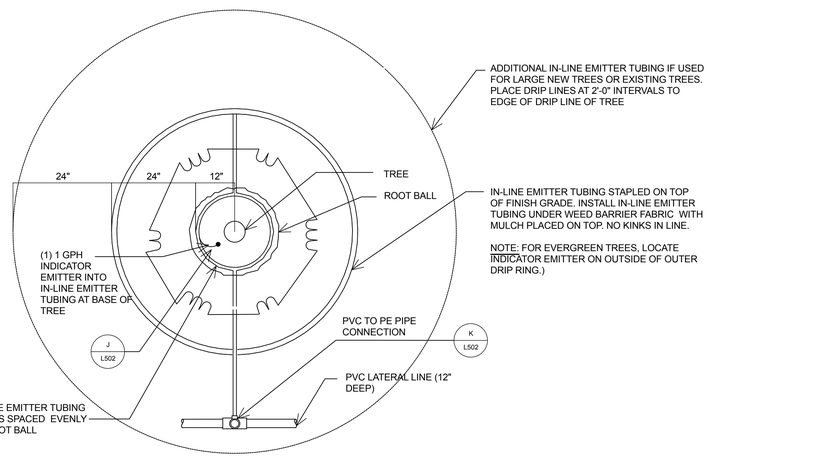

I TREE DRIP - PLAN VIEW (Planter Areas)

NO SCALE

NOTE: FITTINGS TO INLINE DRIP TUBING TO BE INSERT FITTINGS. USE OETICKER CLAMPS FOR NON-NETAFIM FITTINGS.

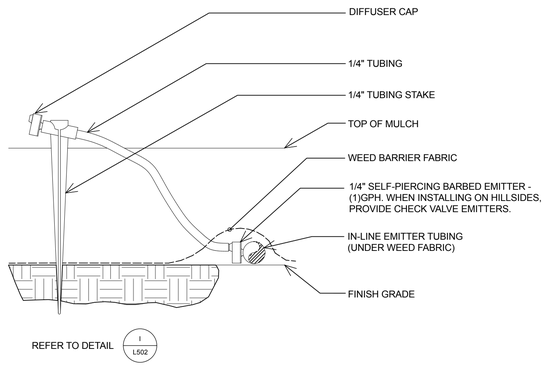

NOTE:
1. CONNECT SELF-PIERCING EMITTER DIRECTLY INTO IN-LINE EMITTER TUBING.
2. THIS IS AN INDICATOR ONLY EMITTER TO BE USED AT EACH TREE RING AND AREA WHERE IN-LINE EMITTER TUBING IS INSTALLED.
3. 1/4" TUBING LENGTH: MINIMUM 14", MAXIMUM 24".

J INDICATOR EMITTER

NO SCALE

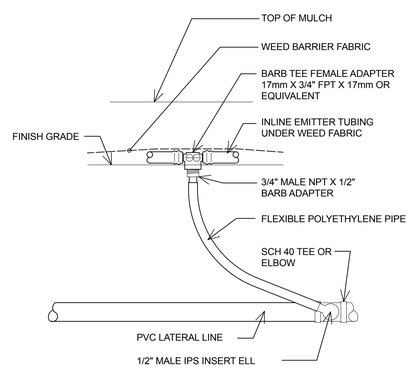

NOTE:
1. USE AT TREE RINGS AND AS CONNECTION FROM SUPPLY AND EXHAUST HEADERS.
2. DO NOT EXCEED (3) GPM FLOW THROUGH SINGLE CONNECTION.

K PVC TO IN-LINE EMITTER

NO SCALE

Printed: 1 Apr 2025 10:44 AM

bhd ARCHITECTS
www.bhdarchitects.com
Phone 801.571.0010
Fax 801.571.0303
Toll Free 888.571.0010
65 East Wadsworth Park Drive
Suite 205 Draper, Utah 84020

LICENSED LANDSCAPE ARCHITECT
05/28/2025
SCOTT A. SCHOONOVER
349757

McNEIL ENGINEERING
Economic and Sustainable Design, Professionals You Know and Trust
8320 South Hickory Ave. • Suite 100 • Phone 801.255.0529 • Fax 801.255.4449
Civil Engineering • Land Planning & Landscape Architecture
Structural Engineering • Land Surveying & HDS

THE CHURCH OF JESUS CHRIST OF LATTER-DAY SAINTS

Nibley 6 &
Nibley UT West Stake

Approx. 3410 South 1200 West, Nibley, Utah
41.670809, -111.840775

Owner #: 514.4728
Plan Series: Heritage 24
County Parcel: 03:050:0016
BHD #: 2403
Date: 29 May 2025

Drawing Issue and Revision Schedule

#	Date	Description
1	29 May 2025	Bid Documents

LANDSCAPE IRRIGATION DETAILS

L502

NOTES:

1. SEE EMISSION DEVICE SCHEDULE ON IRRIGATION PLAN FOR TYPE, QUANTITY AND SIZE OF EMISSION DEVICE PER PLANT.
2. INSTALL A MAX. OF (6) EMISSION DEVICES PER PVC CONNECTION.
3. DISTRIBUTION TUBING SHALL BE INSTALLED A MINIMUM OF 12" BELOW FINISHED GRADE AND ONLY BE BROUGHT TO THE SURFACE AT EACH PLANT.

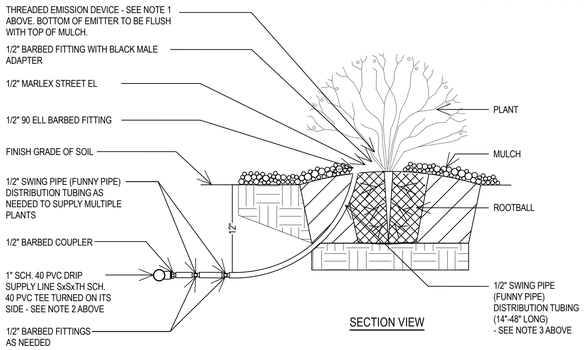

SECTION VIEW

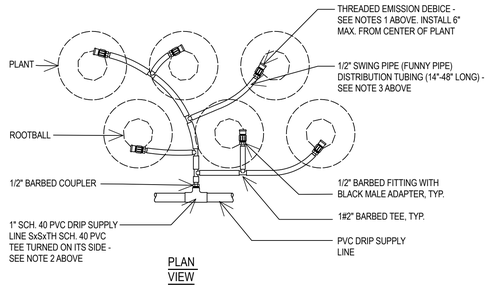

PLAN VIEW

A DRIP EMISSION DEVICE @ SHRUBS

NO SCALE

NOTES:

1. THREADED EMITTER SHALL BE FROM GPH IRRIGATION PRODUCTS MODEL GPSTCV SPEC-CHECK PC "DESERT CAMO" COLOR FOR ROCK AREAS AND "MULCH CAMO" COLOR FOR BARK MULCH AREAS.
2. SEE EMITTER SCHEDULE ON IRRIGATION PLAN FOR QUANTITY AND SIZE OF EMITTERS PER PLANT.
3. INSTALL A MAX. OF (2) EMITTERS PER PVC CONNECTION.
4. DISTRIBUTION TUBING SHALL BE INSTALLED A MINIMUM OF 12" BELOW FINISHED GRADE AND ONLY BE BROUGHT TO THE SURFACE AT EACH PLANT.

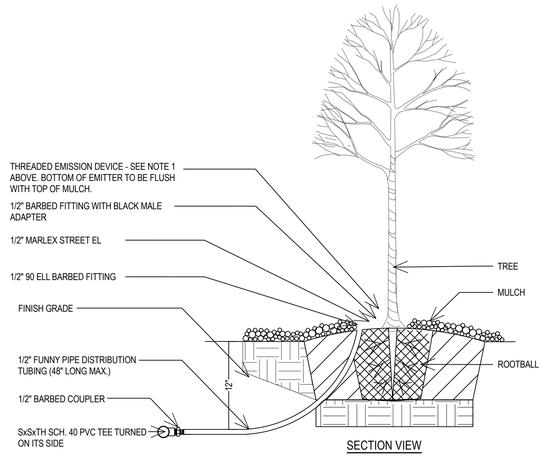

SECTION VIEW

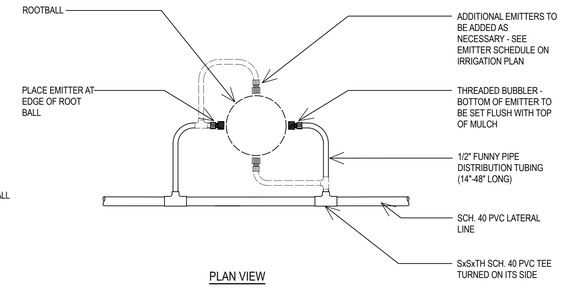

PLAN VIEW

B DRIP BUBBLER @ TREES

NO SCALE

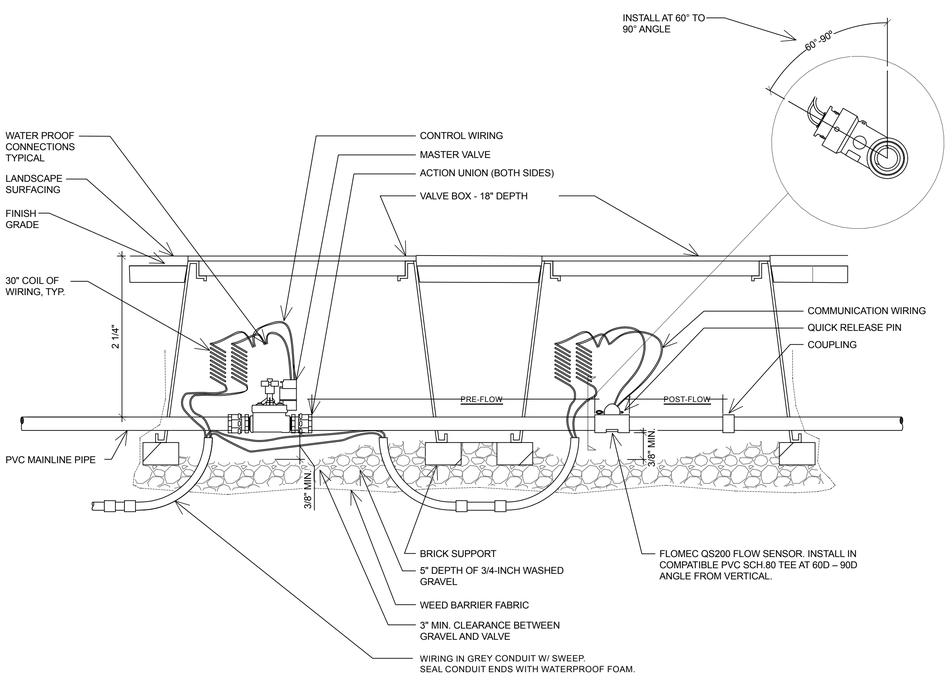

NOTES:

1. REFER TO SCHEDULE FOR MINIMUM PRE-FLOW AND POST-FLOW DISTANCES TO BE FREE FROM FITTINGS.
2. 16" MINIMUM MAIN LINE DEPTH AT VALVE BOX. 18" LINE DEPTH EVERYWHERE ELSE.
3. PLACE FITTINGS WITHIN VALVE BOX CLEAR OF SUPPORT BRICKS.
4. WHEN APPLICABLE, INSTALL DECODER PER AUTOMATIC VALVE DETAIL.

NO FITTING MINIMUM DISTANCE SCHEDULE		
PIPE SIZE	PRE-FLOW	POST-FLOW
1"	10"	5"
1-1/2"	15"	8"
2"	20"	10"

C MASTER VALVE/FLOW SENSOR

NO SCALE

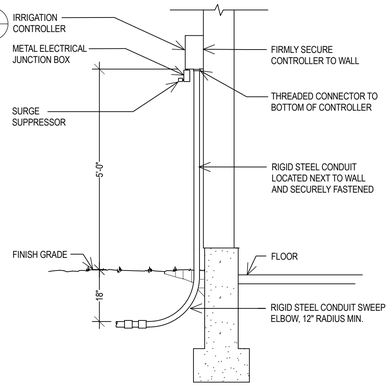

D CONTROLLER

NO SCALE

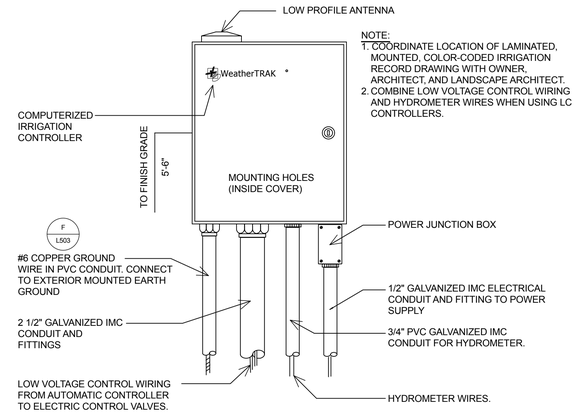

E SMART CONTROLLER

NO SCALE

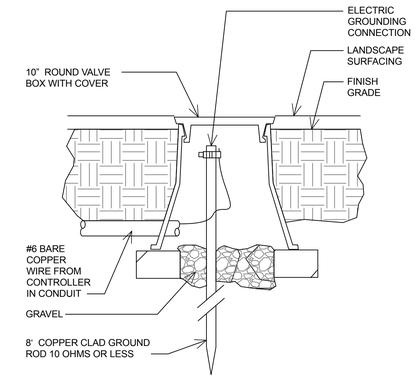

F LIGHTNING GROUNDING ROD

NO SCALE

bhd ARCHITECTS
www.bhdarchitects.com
Phone 801.571.0010
Fax 801.571.0303
Toll Free 888.571.0010
65 East Wadsworth Park Drive
Suite 205 Draper, Utah 84020

STATE OF UTAH
05/28/2025
SCOTT A. SCHOONOVER
349757
LICENSED LANDSCAPE ARCHITECT

McNEIL ENGINEERING
Civil Engineering • Land Planning & Development
Structural Engineering • Land Surveying & MEP

THE CHURCH OF JESUS CHRIST OF LATTER-DAY SAINTS

Nibley 6 &
Nibley UT West Stake

Approx. 3410 South, 1200 West, Nibley, Utah
41.670809, -111.840775

Owner #: 514.4728
Plan Series: Heritage 24
County Parcel: 03:050:0016
BHD #: 2.403
Date: 29 May 2025

Drawing Issue and Revision Schedule

#	Date	Description
1	29 May 2025	Bid Documents

LANDSCAPE IRRIGATION DETAILS

L503

Printed: 1 Apr 2025 10:44 AM

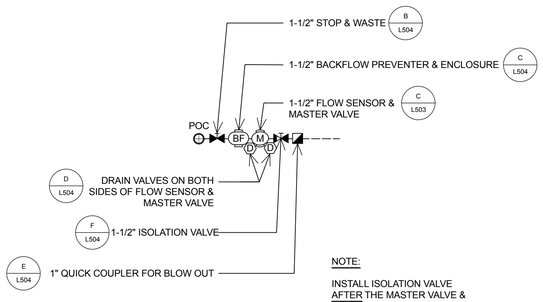

NOTE:

INSTALL ISOLATION VALVE AFTER THE MASTER VALVE & FLOW SENSOR AND BEFORE THE QUICK COUPLER. THE MASTER VALVE & FLOW SENSOR IS TO BE DRAINED MANUALLY.

POC: BACKFLOW PREVENTER ASSEMBLY

A

NO SCALE

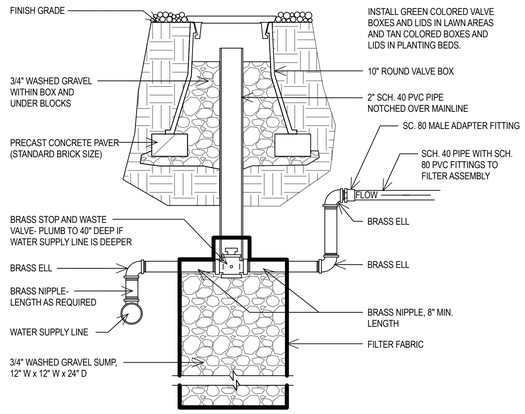

NOTE:

INSTALL GREEN COLORED VALVE BOXES AND LIDS IN LAWN AREAS AND TAN COLORED BOXES AND LIDS IN PLANTING BEDS.

STOP & WASTE VALVE

B

NO SCALE

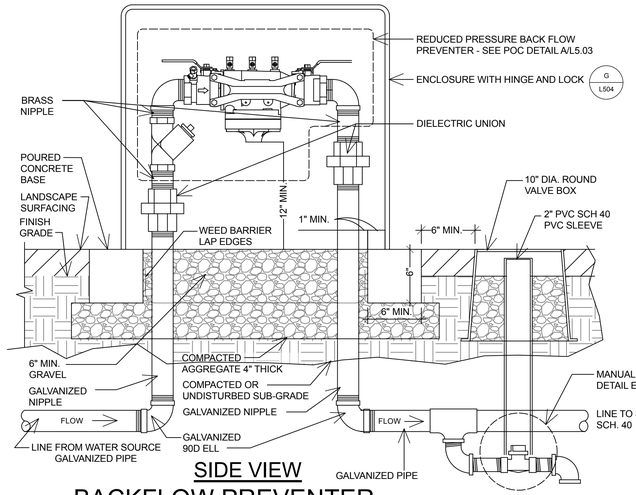

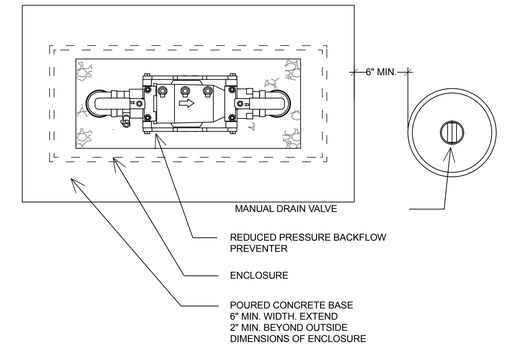

BACKFLOW PREVENTER

C

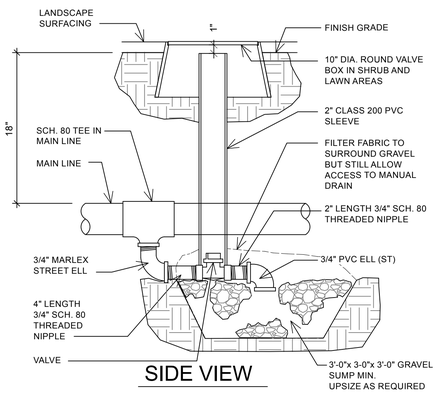

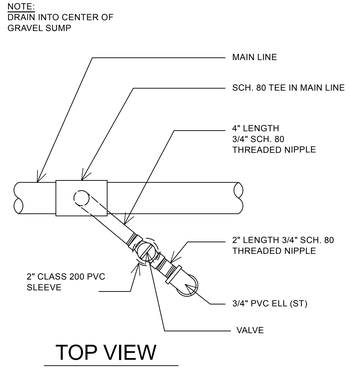

MAIN LINE MANUAL DRAIN VALVE

D

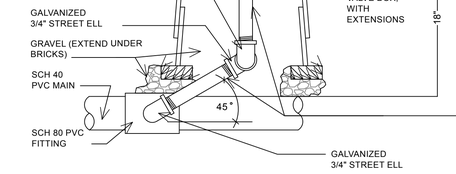

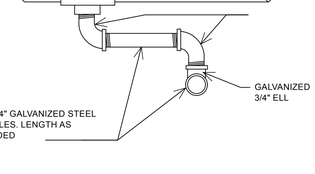

QUICK COUPLING VALVE

F

NO SCALE

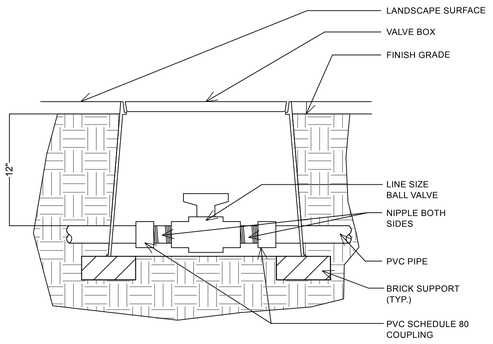

ISOLATION VALVE

E

NO SCALE

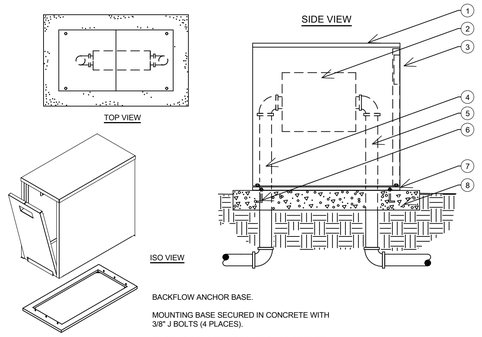

BACKFLOW ANCHOR BASE.

MOUNTING BASE SECURED IN CONCRETE WITH 3/8" J BOLTS (4 PLACES).

EXISTING CONCRETE CORNERS WILL NEED TO 3/8"x 3" REDHEAD ANCHORS.

LEGEND

1. ALUMINUM BACKFLOW ENCLOSURE.
2. BACKFLOW PREVENTER.
3. HINGED DROP DOWN DOOR,PADLOCK AT TOP.
4. WATER SERVICE INLET PIPING.
5. WATER SERVICE OUTLET PIPING.
6. 3/8" "L" STYLE ANCHOR BOLTS.
7. ANCHOR PLATE MOUNTING.
8. POURED CONCRETE BASE - 6" MIN. THICKNESS - EXTEND 4" BEYOND OUTSIDE DIMENSIONS OF ENCLOSURE.

BACKFLOW ENCLOSURE

G

NO SCALE

Printed: 1 Apr 2025 10:44 AM

bhd ARCHITECTS
www.bhdarchitects.com
Phone 801.571.0010
Fax 801.571.0303
Toll Free 888.571.0010
65 East Wadsworth Park Drive
Suite 205 Draper, Utah 84020

STATE OF UTAH
05/28/2025
SCOTT A. SCHOONOVER
349757
LICENSED LANDSCAPE ARCHITECT

McNEIL ENGINEERING
Civil Engineering • Land Planning & Landscape Architecture
Structural Engineering • Land Surveying & HOS

THE CHURCH OF JESUS CHRIST OF LATTER-DAY SAINTS

Drawing Issue and Revision Schedule

#	Date	Description
1	29 May 2025	Bid Documents

Nibley 6 &
Nibley UT West Stake

Approx. 3410 South 1200 West, Nibley, Utah
41.670809, -111.860775

Date: 29 May 2025
BHD #: 2403
County Parcel: 03:050:0016
Plan Series: Heritage 24
Owner #: 514.4728

LANDSCAPE IRRIGATION DETAILS

L504

General Notes

A. For wall types see Sheet A121.
B. For sheathing see Sheet A131.
C. For insulation see Sheet A133.
D. For gypsum see Sheet A135.
E. Install fire blocking at shaft walls.
F. Install 2x fire blocking in all walls at ceiling and floor levels.
G. At all walls exceeding 10'-0" in height, install 2x fire blocking at 10'-0" o.c. maximum vertically and at floor and ceiling levels.
H. Provide solid blocking in the walls at all door stops, visual display boards, toilet compartments, lavatory supports, drinking fountains, millwork and cabinets, and at all other equipment and accessory locations. See detail sheets.

Keyed Notes

10-22 Semi-recessed fire extinguisher cabinet. See E/A554 and code plans.
32-4 Mechanical Enclosure Wall. See C and D/C504.

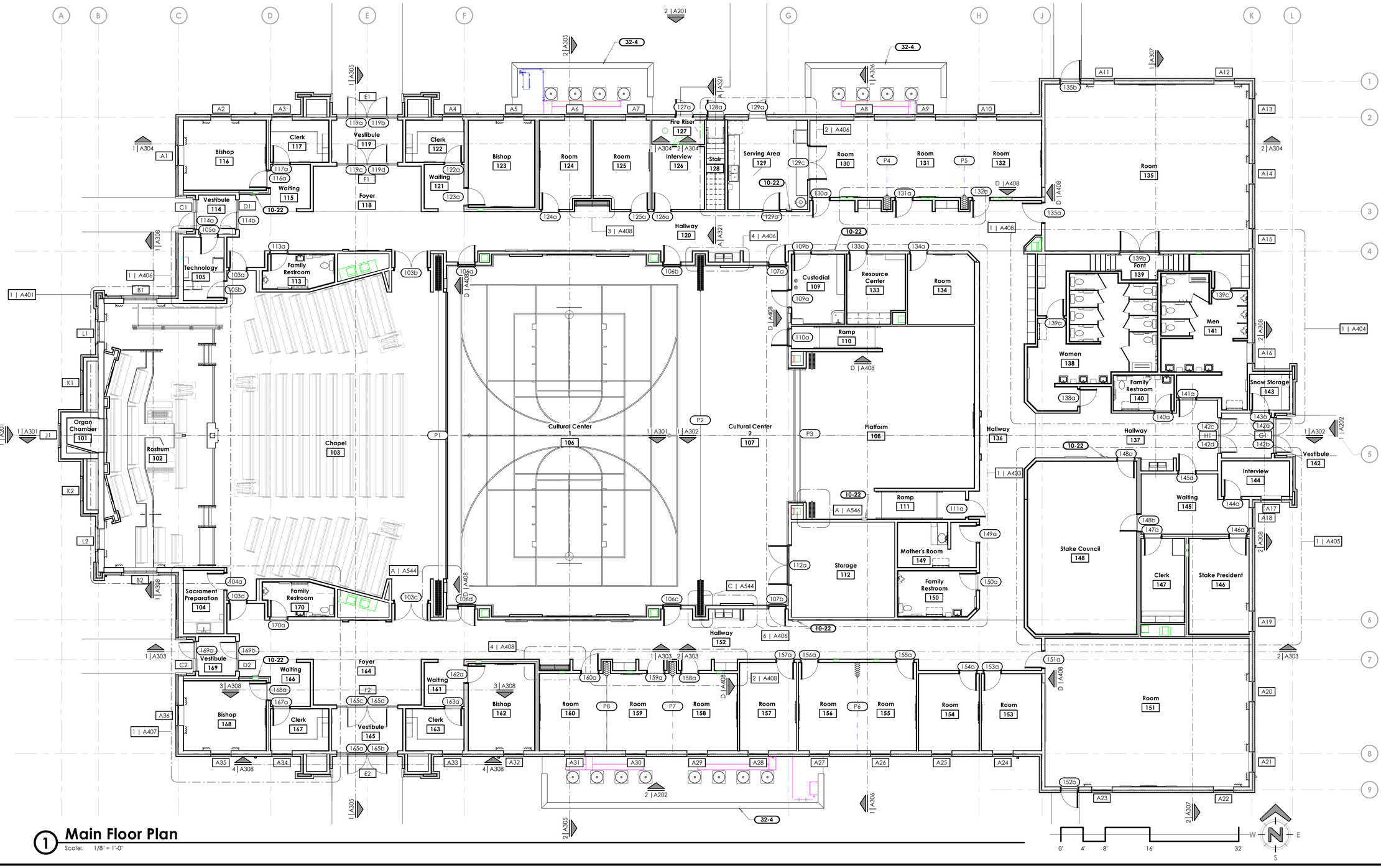

1 Main Floor Plan

Scale: 1/8" = 1'-0"

bhd ARCHITECTS
www.bhdarchitects.com
Phone 801.571.0010
Fax 801.571.0303
Toll Free 888.571.0010
65 East Wadsworth Park Drive
Suite 205 Draper, Utah 84020

LICENSED ARCHITECT
Lafe Theodore Harris
Date 29 May 2025
6928898-0301
STATE OF UTAH

THE CHURCH OF
JESUS CHRIST
OF LATTER-DAY SAINTS

Nibley 6 & Nibley UT West Stake

Approx. 3410 South 1200 West, Nibley, Utah
41.670809, -111.860775

Date: 29 May 2025
BHD #: 2403
County Parcel: 03:050:0016
Plan Series: Heritage 24
Owner #: 514-4728

Drawing Issue and Revision Schedule

#	Date	Description
1	29 May 2024	Bid Documents

Main Floor Plan

A101

5/29/2025 11:09:58 AM

Equipment Platform Symbol Legend

- Equipment platform sheathing - painted gray.
- Attic catwalk in trusses above.
- FE — Wall mounted fire extinguisher.
- Equipment platform guardrail, see E/A552.

General Equipment Plan Notes:

1. Refer to Sheet A122 for equipment platform wall types.
2. Refer to Sheet A132 for equipment platform sheathing.
3. Refer to Sheet A134 for equipment platform insulation.
4. Refer to Sheet A136 for equipment platform gypsum board.
5. Refer to Sheet A152 for equipment platform ceilings.
6. Ductwork and piping not shown for clarity. Refer to Mechanical and Plumbing drawings.
7. Provide safety railing at all platform perimeter not protected by partitions or ductwork. Refer to Detail E/A552.
8. At all walls exceeding 10'-0" in height, install 2x fire blocking at 10'-0" o.c. maximum vertically and at floor and ceiling levels.
9. Install fire blocking at shaft walls.
10. Seal all penetrations through the building thermal envelope.

Keyed Notes

05-2	Steel pipe and tube railing, painted.
06-3	Attic access catwalk above. See A/A552. Center catwalk in truss at the high point of the truss.
06-68	24" x 48" opening through wall at catwalk.
10-23	Fire extinguisher on wall hook.

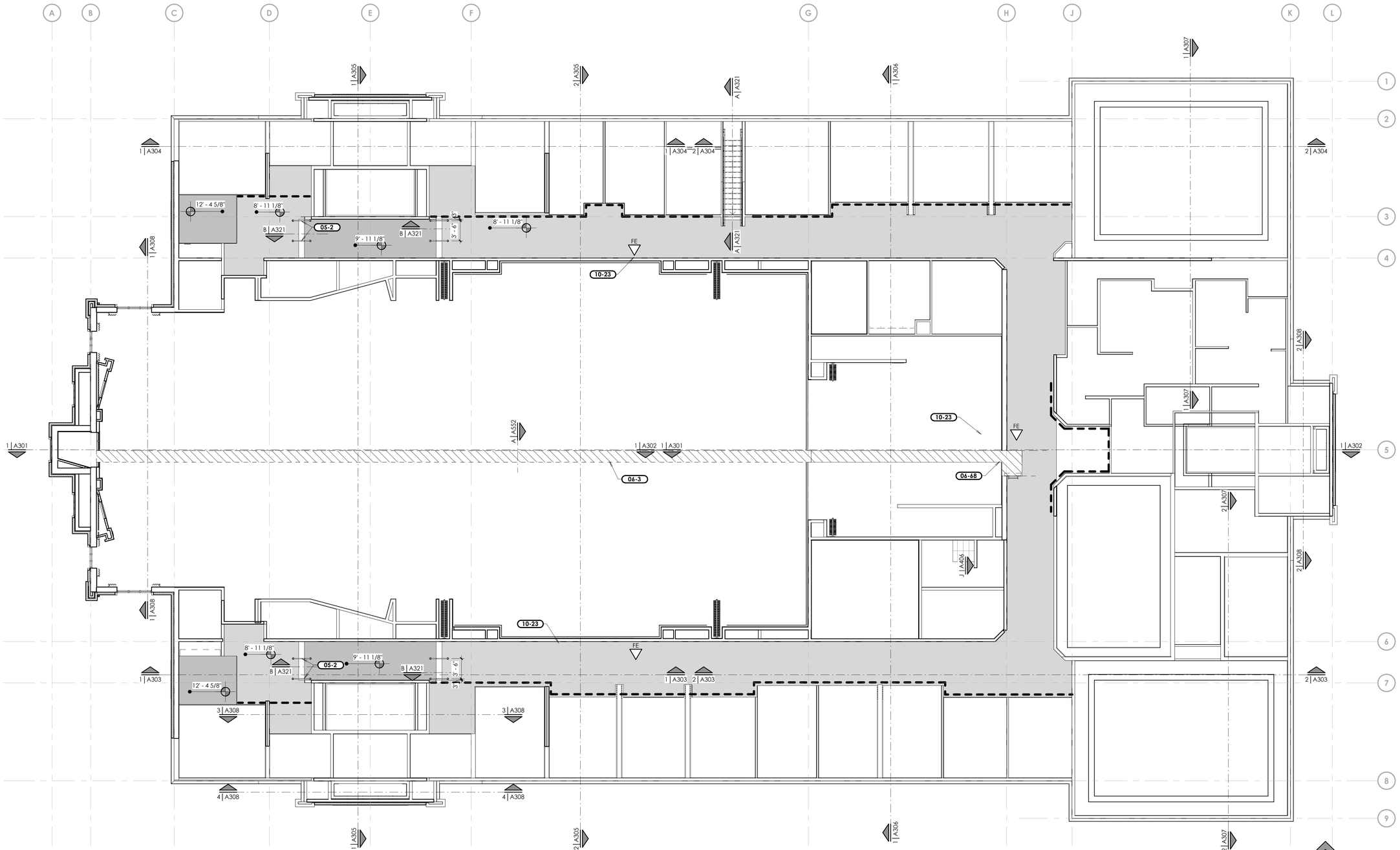

1 Equipment Platform Plan

Scale: 1/8" = 1'-0"

0' 4' 8' 16' 32'

W E S

bhd ARCHITECTS
www.bhdarchitects.com
Phone 801.571.0010
Fax 801.571.0303
Toll Free 888.571.0010
65 East Wadsworth Park Drive
Suite 205 Draper, Utah 84020

LICENSED ARCHITECT
Lafe Theodore Harris
29 May 2025
6978898-0301
STATE OF UTAH

THE CHURCH OF
JESUS CHRIST
OF LATTER-DAY SAINTS

Nibley 6 &
Nibley UT West Stake

Approx. 3410 South 1200 West, Nibley, Utah
41.670809, -111.860775

Date:	BHD #:	County Parcel:	Plan Series:	Owner #:
29 May 2025	2403	03:050:0016	Heritage 24	514-4728

Drawing Issue and Revision Schedule

#	Date	Description

Equipment Platform Plan

A102

5/29/2025 9:30:41 AM

Keyed Notes

03-11 Recess foundation wall 8" down and pour slab through opening.
11-7 Volleyball post insert. See B/A554.

Foundation Dimension Plan Legend

Concrete slab-on-grade. Refer to the structural plans.

Depress slab. Verify recess depth with associated floor finish systems.

General Foundation Plan Notes

1. Refer to enlarged plumbing plans for additional plumbing information and associated fixture Locations.
2. Dimensions shown to slab depressions are determined based on the best information available at the time the drawings were completed. Dimensions shown are to assist the contractor only and shall not be used as a substitute for proper contractor coordination of location of mechanical, plumbing and electrical elements which penetrate the floor slabs.
3. All dimensions are to be coordinated with the associated trades and the field verified measurements.
4. Refer to floor finish plans for floor finishes requiring depressed slab and locations.
5. (FB) Refer to electrical and audio/video for floorbox size and additional information.
6. Install vapor retarder under concrete slab.

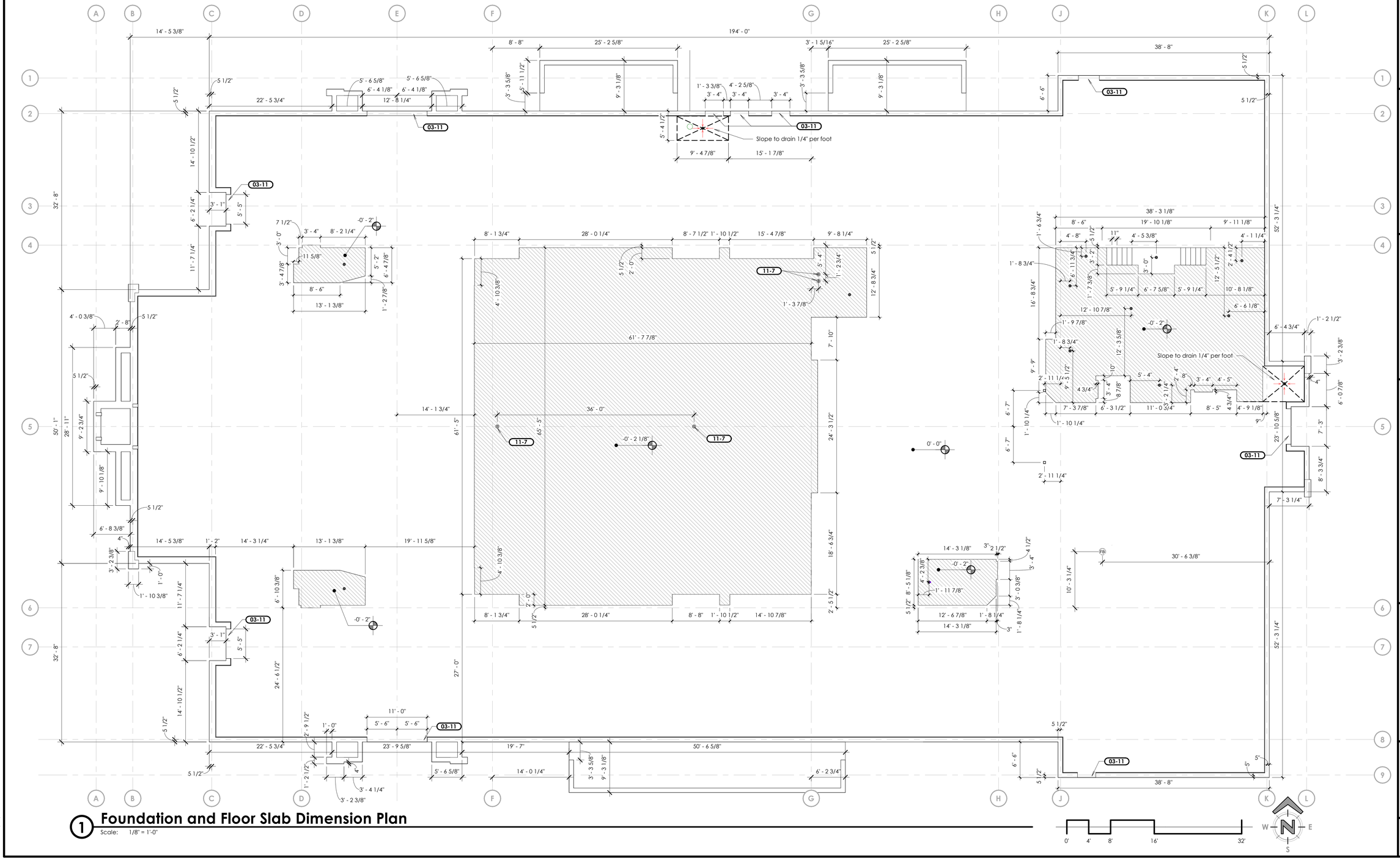

1 Foundation and Floor Slab Dimension Plan

Scale: 1/8" = 1'-0"

bhd ARCHITECTS
www.bhdarchitects.com
Phone 801.571.0010
Fax 801.571.0303
Toll Free 888.571.0010
65 East Wadsworth Park Drive
Suite 205 Draper, Utah 84020

LICENSED ARCHITECT Lafe Theodore Harris 6928898-0301 29 May 2025 STATE OF UTAH

THE CHURCH OF JESUS CHRIST OF LATTER-DAY SAINTS

Nibley 6 & Nibley UT West Stake

Approx. 3410 South 1200 West, Nibley, Utah 41.670809, -111.860775

Date:	BHD #:	County Parcel:	Plan Series:	Owner #:
29 May 2025	2403	03:050:0016	Heritage 24	514-4728

Drawing Issue and Revision Schedule

#	Date	Description
1	29 May 2024	Bid Documents

Foundation and Floor Slab Dimension Plan

A111

5/29/2025 9:30:42 AM

General Notes

A. Dimensions are from face of stud or from grid unless otherwise noted.
B. Where walls appear to lie on the grid, align the face of the wall framing with the grid line unless otherwise noted.

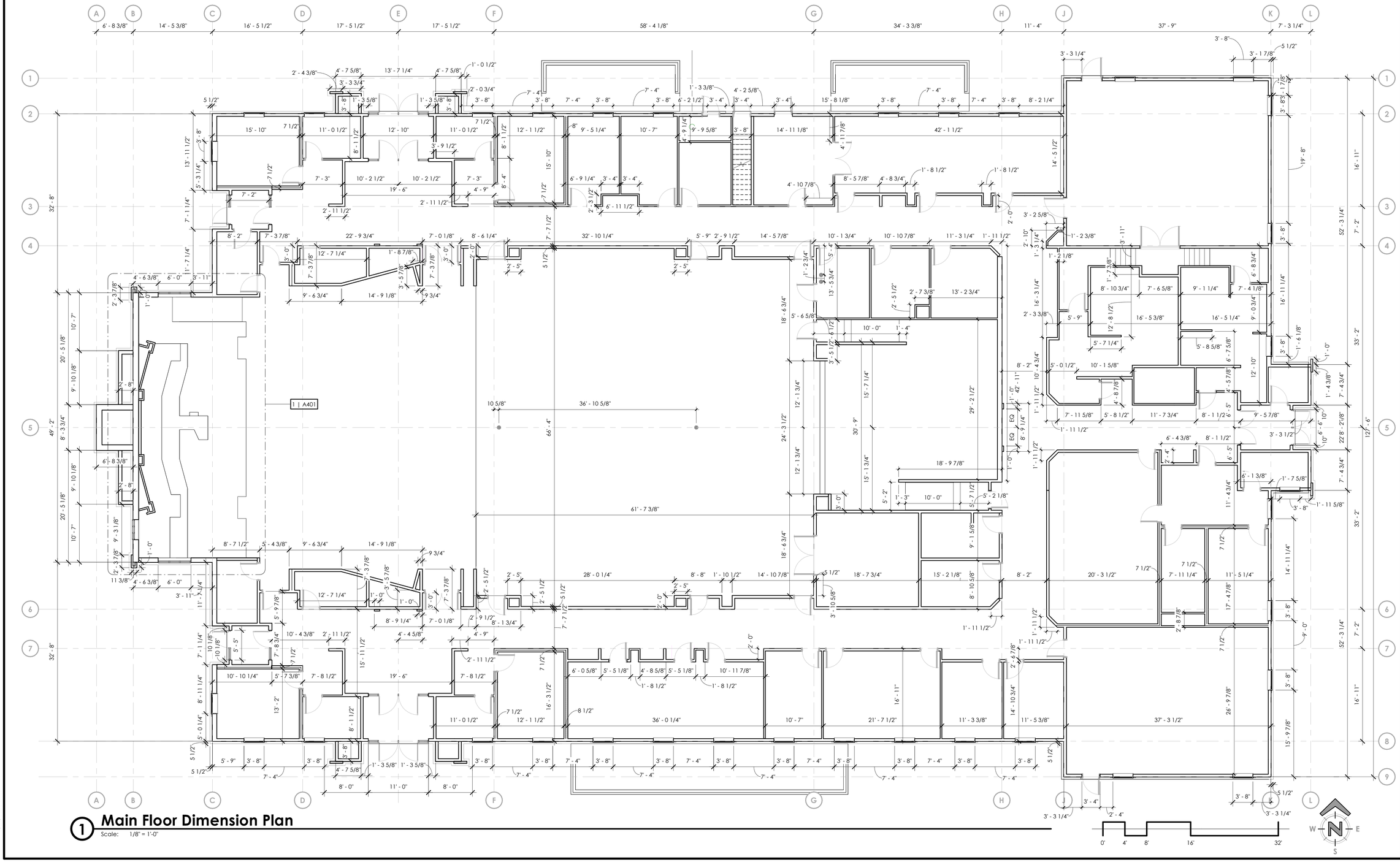

1 Main Floor Dimension Plan

Scale: 1/8" = 1'-0"

bhd ARCHITECTS
www.bhdarchitects.com
Phone 801.571.0010
Fax 801.571.0303
Toll Free 888.571.0010
65 East Wadsworth Park Drive
Suite 205 Draper, Utah 84020

LICENSED ARCHITECT
Lafe Theodore Harris
6978898-0301
29 May 2025
STATE OF UTAH

THE CHURCH OF
JESUS CHRIST
OF LATTER-DAY SAINTS

Nibley 6 &
Nibley UT West Stake

Approx. 3410 South 1200 West, Nibley, Utah
41.670809, -111.860775

Date:	BHD #:	County Parcel:	Plan Series:	Owner #:
29 May 2025	2403	03:050:0016	Heritage 24	514-4728

Drawing Issue and Revision Schedule

#	Date	Description

Dimension Plan

A112

5/29/2025 9:30:44 AM

Wall Types Symbol Legend

Wall Types Legend

W4	4" nominal studs.
W4/W4	4" nominal studs, 1" gap, 4" nominal studs.
W6	6" nominal studs.
W8	8" nominal studs.
W10	10" nominal studs.
W12	12" nominal studs.

General Notes

A. For stud types, stud spacing, nailing, etc., see structural sheets.
B. Insulate all exterior walls defining the building envelope. See building Insulation envelope notes on the insulation plans.
C. All insulation is shown on the insulation plans.
D. All sheathing is shown on the structural sheets and the sheathing plans.
E. All gypsum is shown on gypsum plans.
F. Wall heights shown are for reference only. Refer to sections and details.
G. All walls shown on this plan but which are not tagged are walls which are built from the main floor continuous to the top of the wall at or above this level. See the main floor wall types plan for wall types of these walls.

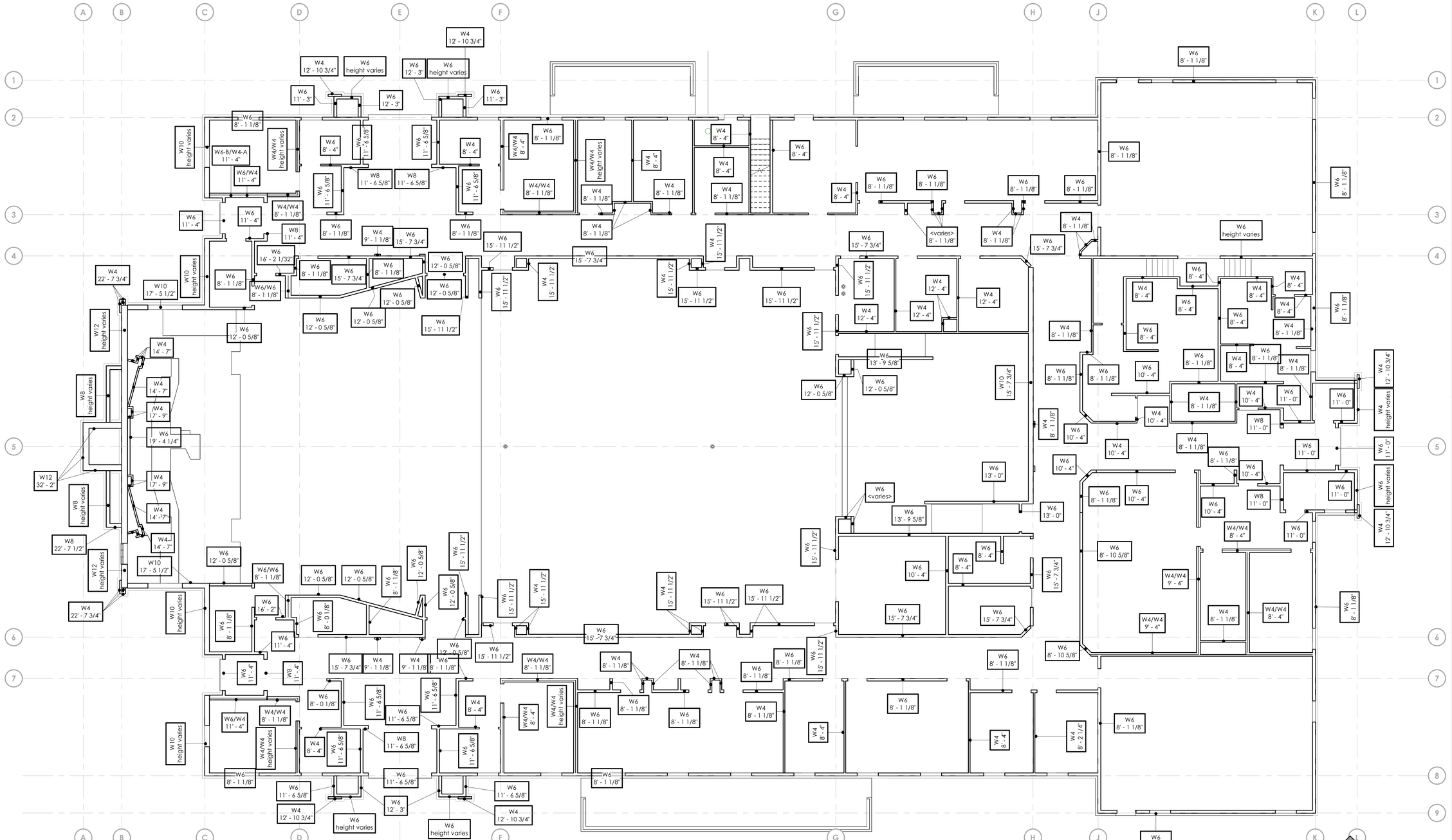

1 Main Floor Wall Types Plan

Scale: 1/8" = 1'-0"

bhd ARCHITECTS
www.bhdarchitects.com
Phone 801.571.0010
Fax 801.571.0303
Toll Free 888.571.0010
65 East Wadsworth Park Drive
Suite 205 Draper, Utah 84020

LICENSED ARCHITECT
Lafe Theodore Harris
Type 29 May 2025
6928898-0301
STATE OF UTAH

THE CHURCH OF
JESUS CHRIST
OF LATTER-DAY SAINTS

Nibley 6 & Nibley UT West Stake

Approx. 3410 South 1200 West, Nibley, Utah
41.670809, -111.860775

Date:	BHD #:	County Parcel:	Plan Series:	Owner #:
29 May 2025	2403	03:050:0016	Heritage 24	514-4728

Drawing Issue and Revision Schedule

#	Date	Description
1	29 May 2024	Bid Documents

Wall Types Plan

A121

5/29/2025 9:30:47 AM

Wall Types Symbol Legend

W6
8'-4 1/2"

Wall type

Top of wall height from main floor FFE to the top of all top plates at the main floor, and from the equipment platform FFE to the top of the top plates at that level.

Wall Types Legend

W4	4" nominal studs.
W4/W4	4" nominal studs, 1" gap, 4" nominal studs.
W6	6" nominal studs.
W8	8" nominal studs.
W10	10" nominal studs.
W12	12" nominal studs.

General Notes

A. For stud types, stud spacing, nailing, etc., see structural sheets.
B. Insulate all exterior walls defining the building envelope. See building Insulation envelope notes on the insulation plans.
C. All insulation is shown on the insulation plans.
D. All sheathing is shown on the structural sheets and the sheathing plans.
E. All gypsum is shown on gypsum plans.
F. Wall heights shown are for reference only. Refer to sections and details.
G. All walls shown on this plan but which are not tagged are walls which are built from the main floor continuous to the top of the wall at or above this level. See the main floor wall types plan for wall types of these walls.

1 Equipment Platform Wall Types Plan

Scale: 1/8" = 1'-0"

0' 4' 8' 16' 32'

W E S

bhd ARCHITECTS
www.bhdarchitects.com
Phone 801.571.0010
Fax 801.571.0303
Toll Free 888.571.0010
65 East Wadsworth Park Drive
Suite 205 Draper, Utah 84020

LICENSED ARCHITECT
Lafe Theodore Harris
Date 29 May 2025
#6928898-0301
STATE OF UTAH

THE CHURCH OF
JESUS CHRIST
OF LATTER-DAY SAINTS

Nibley 6 &
Nibley UT West Stake

Approx. 3410 South 1200 West, Nibley, Utah
41.670809, -111.860775

Date:	BHD #:	County Parcel:	Plan Series:	Owner #:
29 May 2025	2403	03:050:0016	Heritage 24	514-4728

Drawing Issue and Revision Schedule

#	Date	Description

Equipment Platform Wall Types Plan

A122

5/29/2025 9:30:48 AM

Sheathing Legend

Wall sheathing. See structural sheets for nailing requirements.

1 Main Floor Wall Sheathing Plan

Scale: 1/8" = 1'-0"

5/29/2025 9:30:49 AM

bhd ARCHITECTS
www.bhdarchitects.com
Phone 801.571.0010
Fax 801.571.0303
Toll Free 888.571.0010
65 East Wadsworth Park Drive
Suite 205 Draper, Utah 84020

LICENSED ARCHITECT
Late Theodore Harris
6978898-0301
STATE OF UTAH
Apr 29 May 2025

THE CHURCH OF JESUS CHRIST OF LATTER-DAY SAINTS

Nibley 6 & Nibley UT West Stake

Approx. 3410 South 1200 West, Nibley, Utah
41.670809, -111.860775

Date: 29 May 2025
BHD #: 2403
County Parcel: 03:050:0016
Plan Series: Heritage 24
Owner #: 514-4728

Drawing Issue and Revision Schedule

#	Date	Description
1	29 May 2024	Bid Documents

Main Floor Wall Sheathing Plan

A131

Sheathing Legend

Wall sheathing. See structural sheets for nailing requirements.

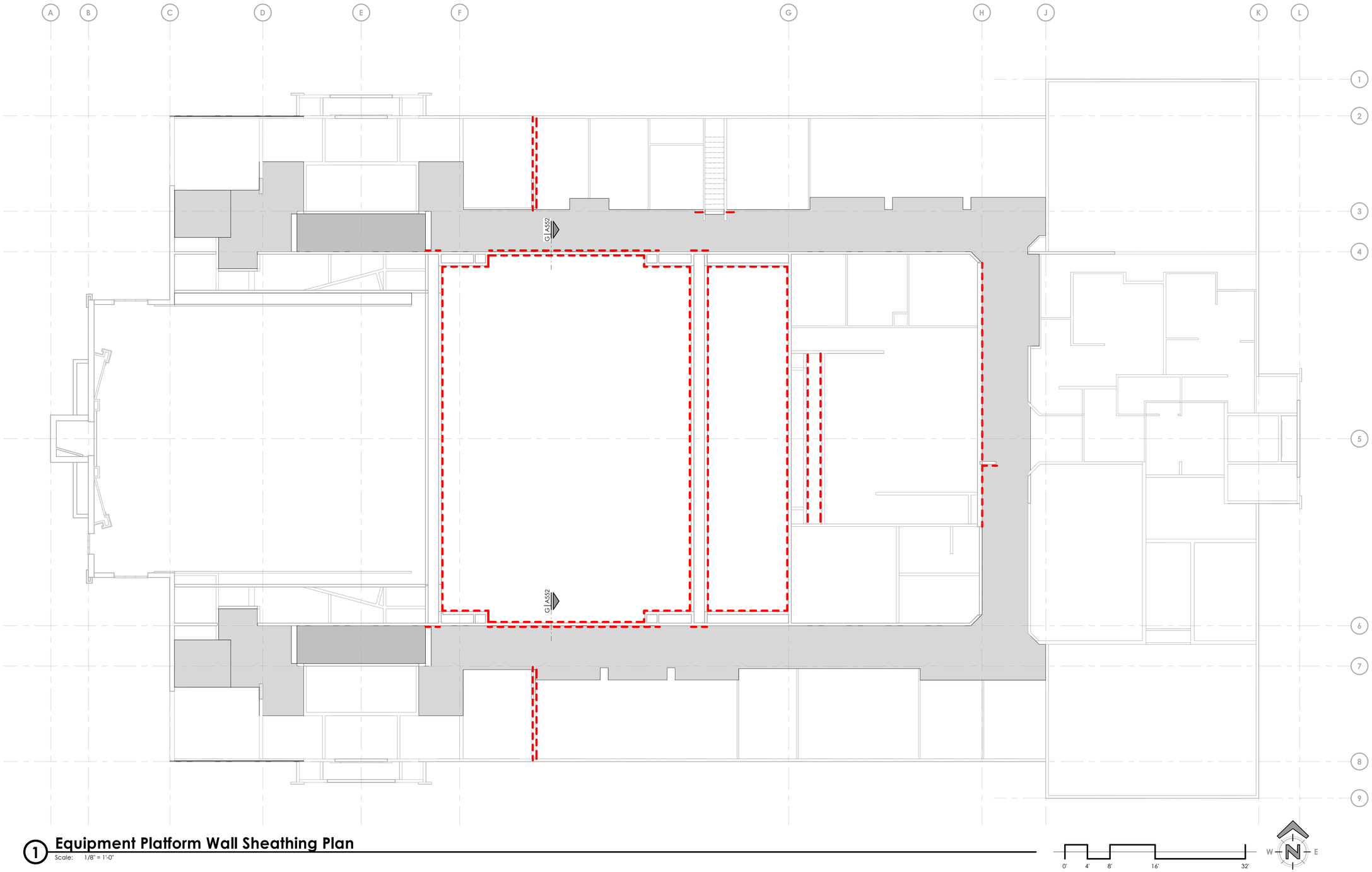

1 Equipment Platform Wall Sheathing Plan

Scale: 1/8" = 1'-0"

0' 4' 8' 16' 32'

W E S

bhd ARCHITECTS
www.bhdarchitects.com
Phone 801.571.0010
Fax 801.571.0303
Toll Free 888.571.0010
65 East Wadsworth Park Drive
Suite 205 Draper, Utah 84020

LICENSED ARCHITECT
Lafe Theodore Harris
29 May 2025
6978898-0301
STATE OF UTAH

THE CHURCH OF
JESUS CHRIST
OF LATTER-DAY SAINTS

Nibley 6 &
Nibley UT West Stake

Approx. 3410 South 1200 West, Nibley, Utah
41.670809, -111.860775

Date: 29 May 2025
BHD #: 2403
County Parcel: 03:050:0016
Plan Series: Heritage 24
Owner #: 514-4728

Drawing Issue and Revision Schedule

#	Date	Description
1	29 May 2024	Bid Documents

Equipment Platform Wall Sheathing Plan

A132

5/29/2025 9:30:50 AM

Insulation batts filling stud cavity.

1" rigid insulation.

Install insulation fabric over insulation batts. Certainteed Optima or equal as approved by architect.

R-30 Sound batts above ceiling.

Fill entire cavity with insulation.

Building Insulation Envelope Minimum Requirements

1. **Roof**: R-57 minimum unfaced batt cavity insulation. See Section 07 2100.
2. **Exterior walls**: R-5 minimum continuous 1" thick rigid insulation. Unfaced batt cavity insulation minimum R-values per wall stud thickness: 2x6 = R-21, 2x8 = R-26, 2x10 = R-32, 2x12 = R-38. See Section 07 2100.
3. **Exterior foundation walls**: R-15 minimum continuous 3" thick XPS rigid insulation. See Section 07 2100.
4. **Vinyl windows**: 0.31 maximum U-factor and 0.20 maximum solar heat gain coefficient (SHGC). See Section 08 5313.
5. **Storefront openings**: 0.43 maximum U-factor and 0.24 maximum solar heat gain coefficient (SHGC). See Section 08 4313.
6. **Hollow metal doors**: R-6 minimum. See Section 08 1113.
7. **Vapor retarder**: Continuous vapor retarder on the interior of the envelope starting at the slab, up wall, under roof truss batt insulation, and down walls to floor slab. Seal air tight. See Section 07 2500.
8. **Weather resistive barrier (WRB)**: Continuous WRB installed on the exterior of the wall sheathing from the foundation to the top of the exterior walls. Door and window openings sealed and flashed per code and manufacturer's requirements.
9. **Envelope continuity**: No holes or gaps in the building insulation envelope. See Sections 07 2100 and 07 2500.
10. **Sound insulation**: See the Insulation Floor Plan for sound batt insulation requirements at the walls and ceilings.
11. **Thermal envelope certificate**: A permanent thermal envelope certificate shall be completed by the contractor. Post the certificate on the wall of the fire riser room. Include a copy of the certificate in the O&M Manual. Include the following in the certificate:
    1. R-values of insulation installed in or on ceilings, roofs, walls, and foundations.
    2. U-factors and Solar Heat Gain Coefficients (SHGC) of doors and windows.
    3. Results from any building envelope air leakage testing performed on the building.

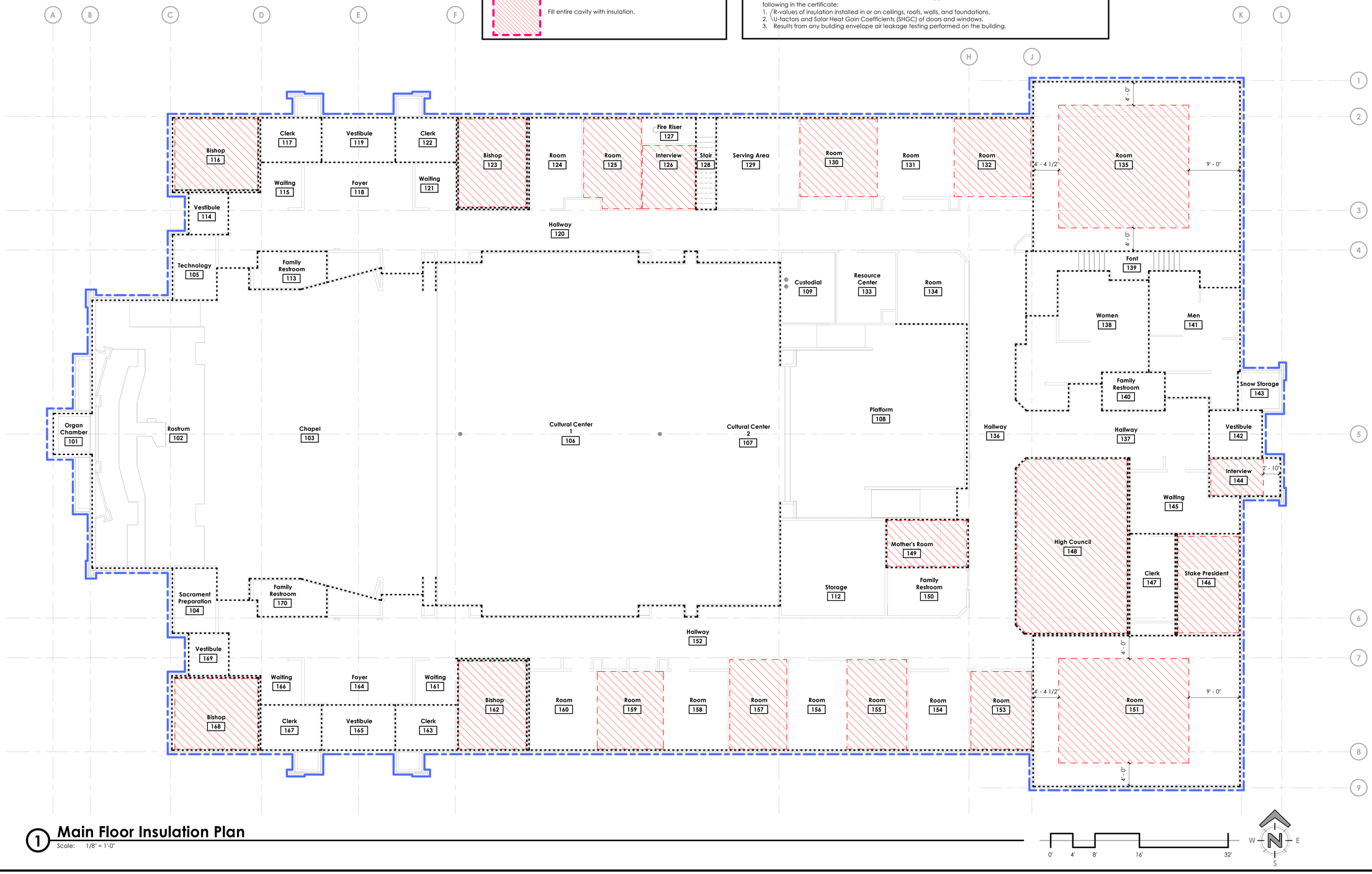

1 Main Floor Insulation Plan

Scale: 1/8" = 1'-0"

5/29/2025 9:30:52 AM

bhd ARCHITECTS
www.bhdarchitects.com
Phone 801.571.0010
Fax 801.571.0303
Toll Free 888.571.0010
65 East Wadsworth Park Drive
Suite 205 Draper, Utah 84020

LICENSED ARCHITECT Lafe Theodore Harris 23 MAY 2025 6276578-0301 STATE OF UTAH

THE CHURCH OF JESUS CHRIST OF LATTER-DAY SAINTS

Nibley 6 & Nibley UT West Stake

Approx. 3410 South 1200 West, Nibley, Utah
41.670809, -111.860775

Owner #: 514-4728
Plan Series: Heritage 24
County Parcel: 03:050:0016
BHD #: 2403
Date: 29 May 2025

Drawing Issue and Revision Schedule

#	Date	Description

Main Floor Insulation Plan

A133

Insulation batts filling stud cavity.

1" rigid insulation.

Install insulation fabric over insulation batts. Certainteed Optima or equal as approved by architect.

R-30 Sound batts above ceiling.

Fill entire cavity with insulation.

Building Insulation Envelope Minimum Requirements

1. **Roof**: R-57 minimum unfaced batt cavity insulation. See Section 07 2100.
2. **Exterior walls**: R-5 minimum continuous 1" thick rigid insulation. Unfaced batt cavity insulation minimum R-values per wall stud thickness: 2x6 = R-21, 2x8 = R-26, 2x10 = R-32, 2x12 = R-38. See Section 07 2100.
3. **Exterior foundation walls**: R-15 minimum continuous 3" thick XPS rigid insulation. See Section 07 2100.
4. **Vinyl windows**: 0.31 maximum U-factor and 0.20 maximum solar heat gain coefficient (SHGC). See Section 08 5313.
5. **Storefront openings**: 0.43 maximum U-factor and 0.24 maximum solar heat gain coefficient (SHGC). See Section 08 4313.
6. **Hollow metal doors**: R-6 minimum. See Section 08 1113.
7. **Vapor retarder**: Continuous vapor retarder on the interior of the envelope starting at the slab, up wall, under roof truss batt insulation, and down walls to floor slab. Seal air tight. See Section 07 2500.
8. **Weather resistive barrier (WRB)**: Continuous WRB installed on the exterior of the wall sheathing from the foundation to the top of the exterior walls. Door and window openings sealed and flashed per code and manufacturer's requirements.
9. **Envelope continuity**: No holes or gaps in the building insulation envelope. See Sections 07 2100 and 07 2500.
10. **Sound insulation**: See the Insulation Floor Plan for sound batt insulation requirements at the walls and ceilings.
11. **Thermal envelope certificate**: A permanent thermal envelope certificate shall be completed by the contractor. Post the certificate on the wall of the fire riser room. Include a copy of the certificate in the O&M Manual. Include the following in the certificate:
    1. R-values of insulation installed in or on ceilings, roofs, walls, and foundations.
    2. U-factors and Solar Heat Gain Coefficients (SHGC) of doors and windows.
    3. Results from any building envelope air leakage testing performed on the building.

Keyed Notes

07-48 Fill entire area above organ chamber with insulation batts.
07-49 See 1/A323 for additional insulation requirements in area above entry.
07-50 See 2/A322 for additional insulation requirements in area above entry.
07-51 Refer to building sections and details for additional insulation requirements over partition doors.

Additive Alternate #1 changes the requirements for roof insulation and vapor retarder. See G100 for description.

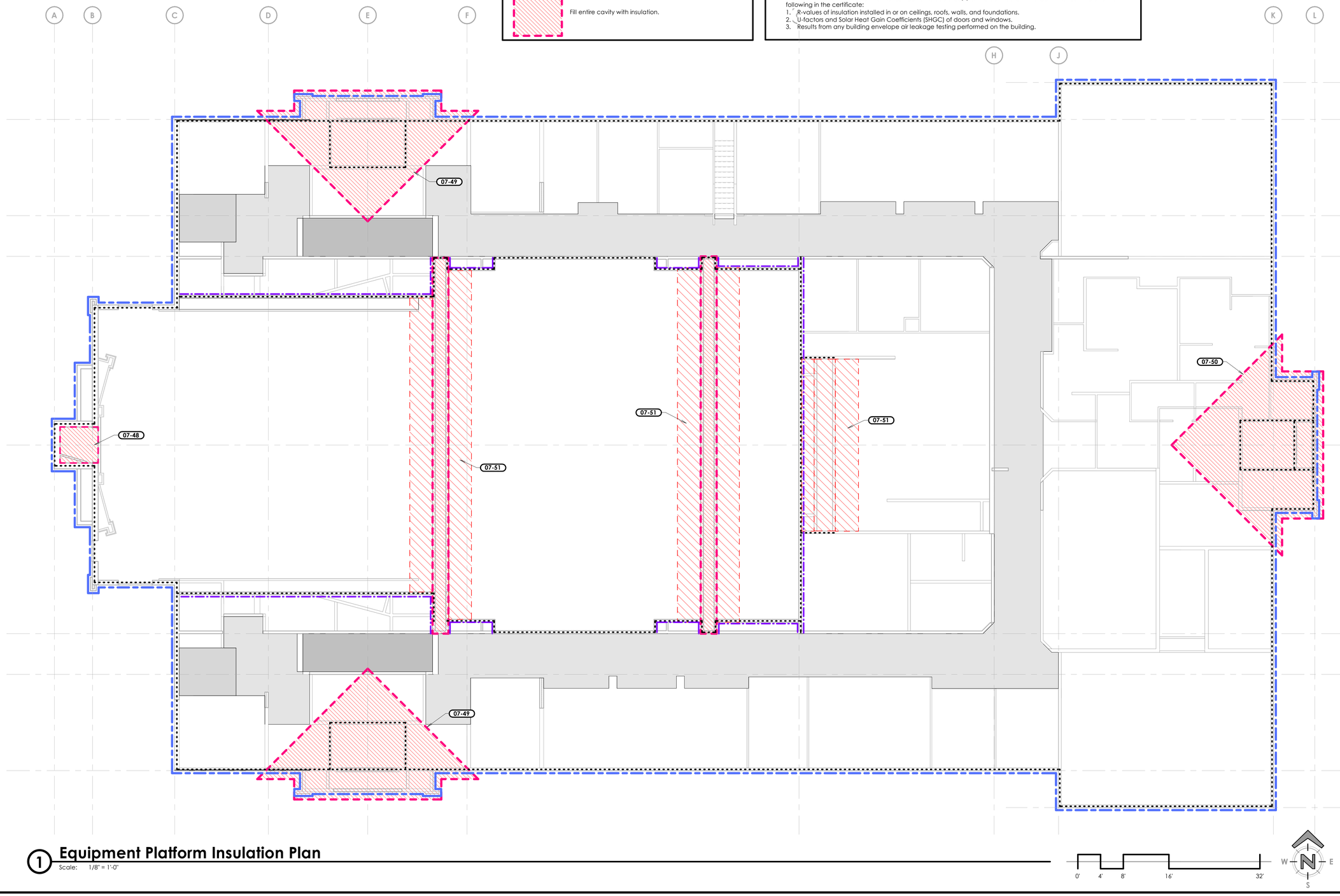

1 **Equipment Platform Insulation Plan**
Scale: 1/8" = 1'-0"

bhd ARCHITECTS
www.bhdarchitects.com
Phone 801.571.0010
Fax 801.571.0303
Toll Free 888.571.0010
65 East Wadsworth Park Drive
Suite 205 Draper, Utah 84020

THE CHURCH OF JESUS CHRIST OF LATTER-DAY SAINTS

Nibley 6 & Nibley UT West Stake

Approx. 3410 South 1200 West, Nibley, Utah
41.670809, -111.860775

Owner #: 514-4728
Plan Series: Heritage 24
County Parcel: 03:050:0016
BHD #: 2403
Date: 29 May 2025

Drawing Issue and Revision Schedule

#	Date	Description

Equipment Platform Insulation Plan

A134

5/29/2025 11:50:20 AM

Gypsum Board Legend

- One layer 5/8" gypsum board.
- Second layer 5/8" gypsum board.

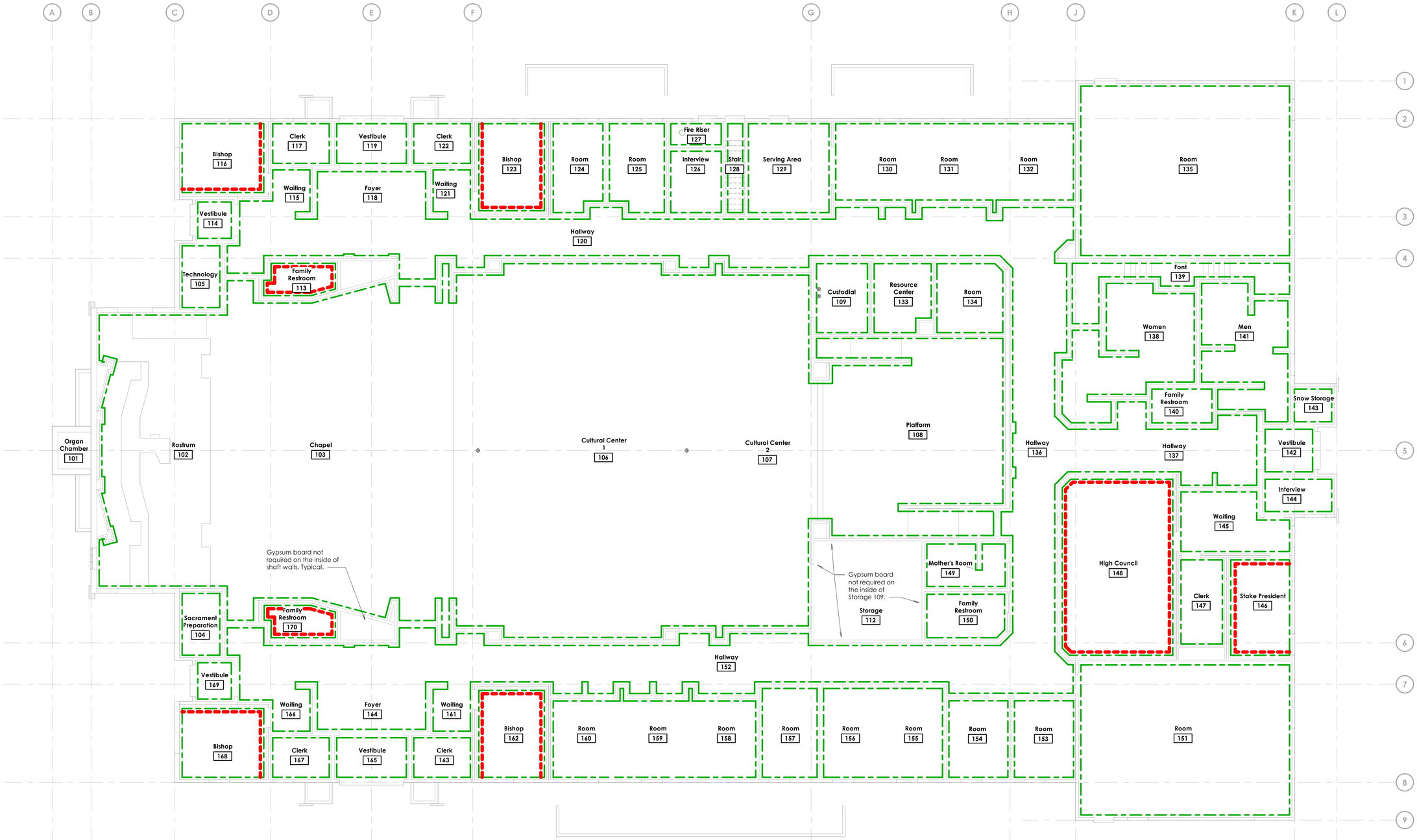

1 Main Floor Gypsum Board Plan

Scale: 1/8" = 1'-0"

bhd ARCHITECTS
www.bhdarchitects.com
Phone 801.571.0010
Fax 801.571.0303
Toll Free 888.571.0010
65 East Wadsworth Park Drive
Suite 205 Draper, Utah 84020

LICENSED ARCHITECT
Lafe Theodore Harris
23 MAY 2025
6278378-0301
STATE OF UTAH

THE CHURCH OF JESUS CHRIST OF LATTER-DAY SAINTS

Nibley 6 & Nibley UT West Stake

Approx. 3410 South 1200 West, Nibley, Utah
41.670809, -111.860775

Owner #: 514-4728
Plan Series: Heritage 24
County Parcel: 03050-0016
BHD #: 2403
Date: 29 May 2025

Drawing Issue and Revision Schedule

#	Date	Description

Main Floor Gypsum Board Plan

A135

5/29/2025 9:30:54 AM

Gypsum Board Legend

- One layer 5/8" gypsum board.
- Second layer 5/8" gypsum board.

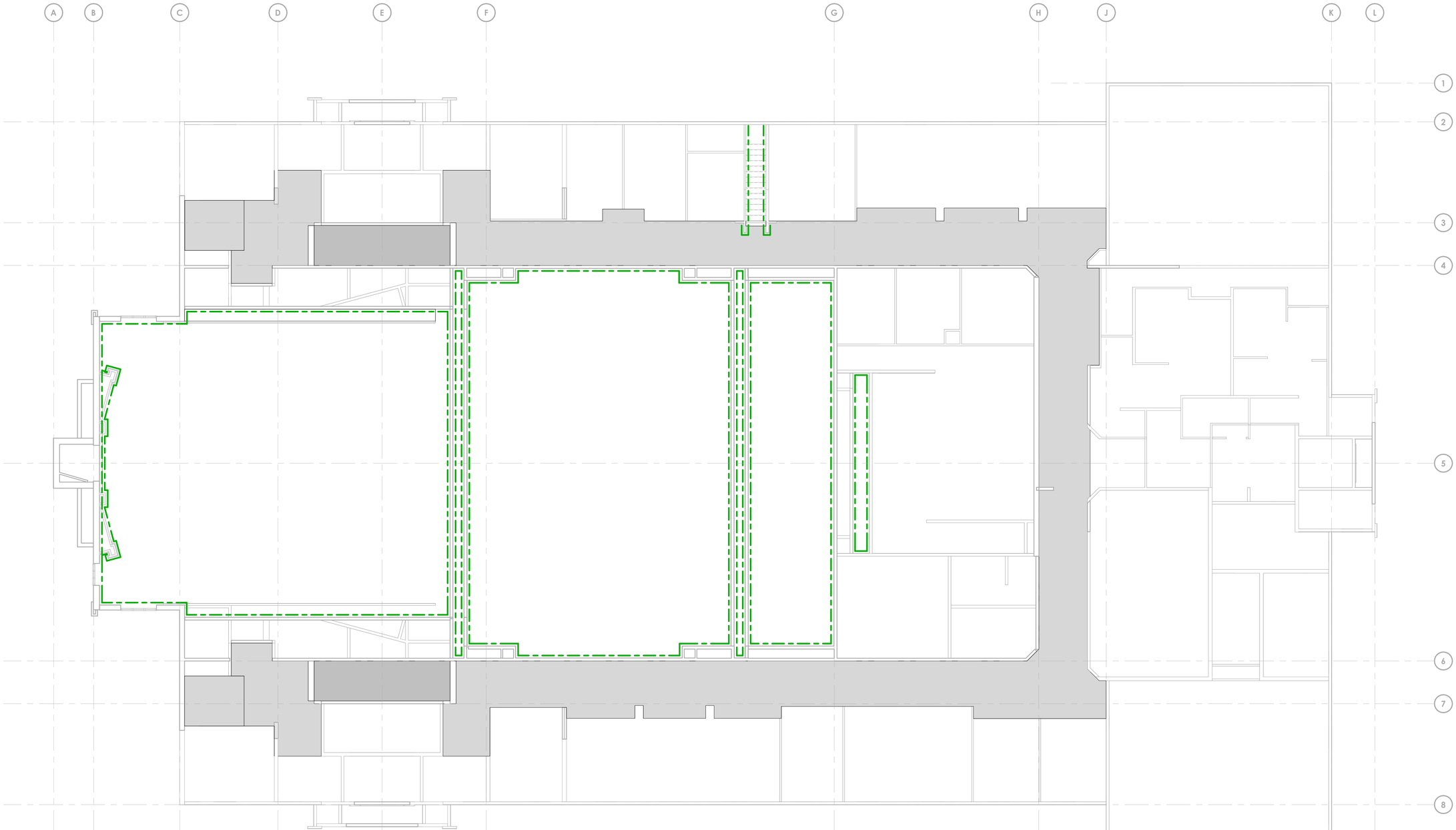

1 Equipment Platform Gypsum Board Plan

Scale: 1/8" = 1'-0"

0' 4' 8' 16' 32'

W E S

bhd ARCHITECTS
www.bhdarchitects.com
Phone 801.571.0010
Fax 801.571.0303
Toll Free 888.571.0010
65 East Wadsworth Park Drive
Suite 205 Draper, Utah 84020

LICENSED ARCHITECT
Lafe Theodore Harris
29 May 2025
6978898-0301
STATE OF UTAH

THE CHURCH OF
JESUS CHRIST
OF LATTER-DAY SAINTS

Nibley 6 &
Nibley UT West Stake

Approx. 3410 South 1200 West, Nibley, Utah
41.670809, -111.860775

Date:	BHD #:	County Parcel:	Plan Series:	Owner #:
29 May 2025	2403	03:050:0016	Heritage 24	514-4728

Drawing Issue and Revision Schedule

#	Date	Description

Equipment Platform Gypsum Board Plan

A136

5/29/2025 9:30:55 AM

General Notes

A. Unless noted otherwise, all eave soffits shall have (2) soffit vent strips; and all rake soffits shall have no vent strips.
B. Roof penetrations and penthouses are shown for reference only. Coordinate locations of all roof penetrations and penthouses with the mechanical and plumbing systems.
C. Paint all vents and combustion piping.
D. Install secondary underlayment over entire roof.

Keyed Notes

07-21 Prefinished metal cricket.
07-26 Prefinished metal rain gutter. See H/A522.
07-27 Prefinished metal downspout. Typical. See G/A522.
07-28 Prefinished metal ridge vent. See A/A522.
10-25 Prefinished aluminum steeple. See A221.
22-15 Vent through roof, flue, or other roof penetration. Typical. See roof details and mechanical and plumbing sheets. Paint all roof penetrations.
23-4 Prefinished metal penthouse. See E/A521 and mechanical sheets.

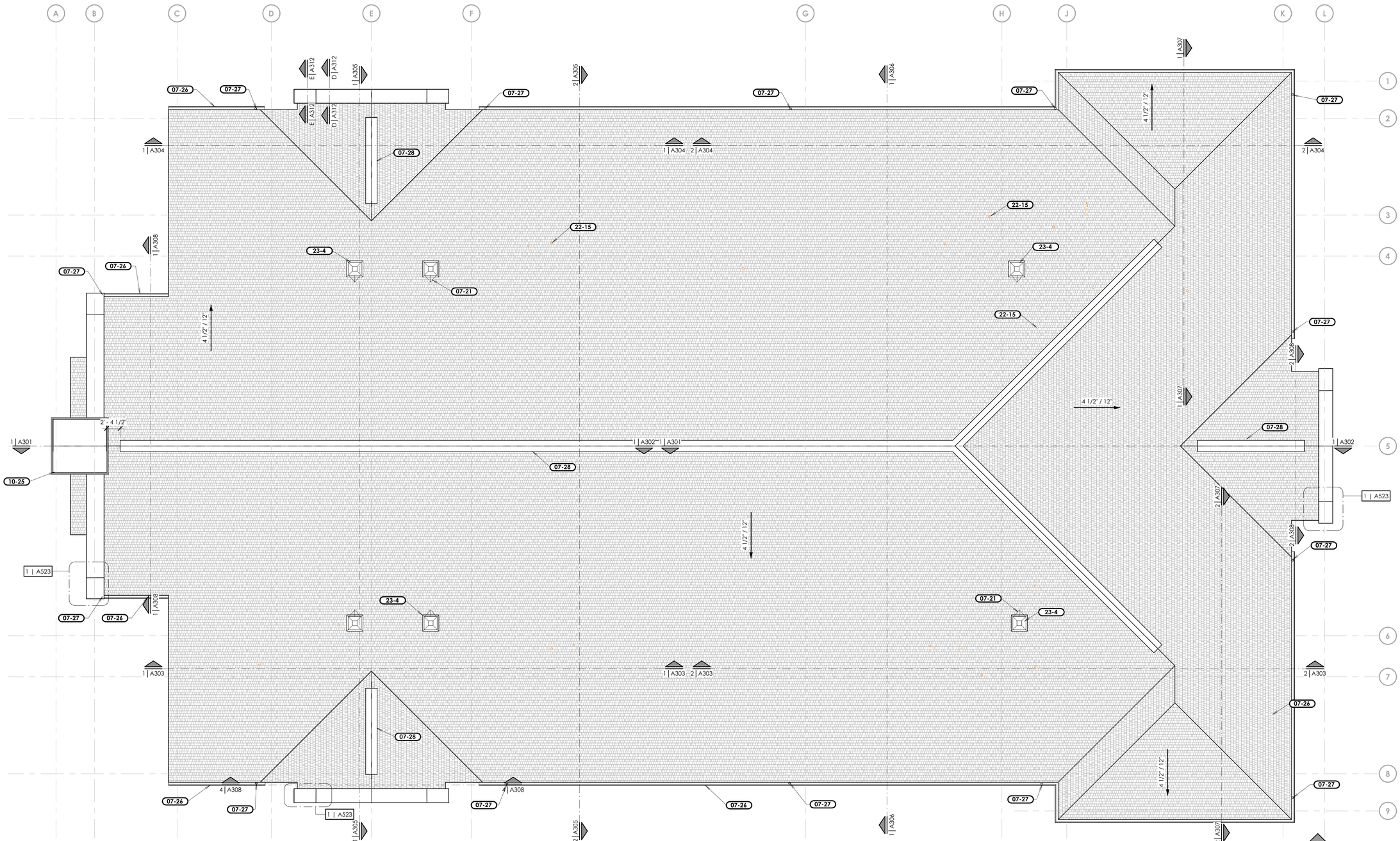

1 Roof Plan
Scale: 1/8" = 1'-0"

5/29/2025 9:30:59 AM

bhd ARCHITECTS
www.bhdarchitects.com
Phone 801.571.0010
Fax 801.571.0303
Toll Free 888.571.0010
65 East Wadsworth Park Drive
Suite 205 Draper, Utah 84020

LICENSED ARCHITECT Late Theodore Harris 23 MAY 2025 6278-0301 STATE OF UTAH

THE CHURCH OF JESUS CHRIST OF LATTER-DAY SAINTS

Nibley 6 & Nibley UT West Stake

Approx. 3410 South 1200 West, Nibley, Utah
41.670809, -111.840775

BHD #: 2403
County Parcel: 03.050.0016
Plan Series: Heritage 24
Owner #: 514-4728
Date: 29 May 2025

Drawing Issue and Revision Schedule

#	Date	Description

Roof Plan

A141

Reflected Ceiling Symbol Legend

Ceiling type — C1 | 8' -0" — Ceiling height from main floor

- Ceiling air supply diffuser, size varies, refer to mechanical drawings.
- Ceiling air return register, size varies, refer to mechanical drawings.
- Ceiling air exhaust fan register, size varies, refer to mechanical drawings.
- Light fixture, refer to electrical drawings.
- Light fixture, refer to electrical drawings.
- Pendant light fixture, refer to electrical drawings.
- Recessed downlight fixture, refer to electrical drawings.
- Directional downlight fixture, refer to electrical drawings.
- (S) Recessed speaker refer to AV drawings
- Exit sign ceiling mounted with arrows as shown, refer to electrical drawings.
- Ceiling mounted occupancy sensor, refer to electrical drawings.

Ceiling Types Legend:

C1 Gypsum board attached to structure, textured, painted

C2 Gypsum board suspended from structure, textured, painted

C4 Gypsum board attached to structure, with glue-on acoustical tile

C5 Prefinished metal soffit. Fill attic space above with loose-fill insulation up to 4" from roof sheathing.

C6 2' x 2' Acoustical lay-in tile in suspended grid.

General Ceiling Plan Notes:

A. Wall mounted light fixtures that occur below ceiling line are not shown.
B. Mounting of speakers: corridor - see C/A531.
C. Provide seismic bracing at all ceiling suspension systems.
D. Suspension ceiling system details, see G, H, J/A531.
E. Refer to sheet A134 for ceiling insulation areas.

1 Main Floor Reflected Ceiling Plan

Scale: 1/8" = 1'-0"

5/29/2025 10:19:26 AM

bhd ARCHITECTS
www.bhdarchitects.com
Phone 801.571.0010
Fax 801.571.0303
Toll Free 888.571.0010
65 East Wadsworth Park Drive
Suite 205 Draper, Utah 84020

LICENSED ARCHITECT Late Theodore Harris 6278-0301 29 MAY 2025 STATE OF UTAH

THE CHURCH OF JESUS CHRIST OF LATTER-DAY SAINTS

Nibley 6 & Nibley UT West Stake

Approx. 3410 South 1200 West, Nibley, Utah
41.670809 -111.866775

Owner #: 514-4728
Plan Series: Heritage 24
County Parcel: 03:050:0016
BHD #: 2403
Date: 29 May 2025

Drawing Issue and Revision Schedule

#	Date	Description
1	29 May 2024	Bid Documents

Main Floor Reflected Ceiling Plan

A151

Keyed Notes

09-42 Recessed ceiling at stair. See A/A321.

Additive Alternate #1 changes the requirements for gypsum board and vapor retarder. See G100 for description.

Equipment Platform Ceiling Legend

5/8" Gypsum board ceiling attached to bottom of trusses, over vapor retarder. See F/A522.

Upper attic exposed vapor retarder. See F/A522.

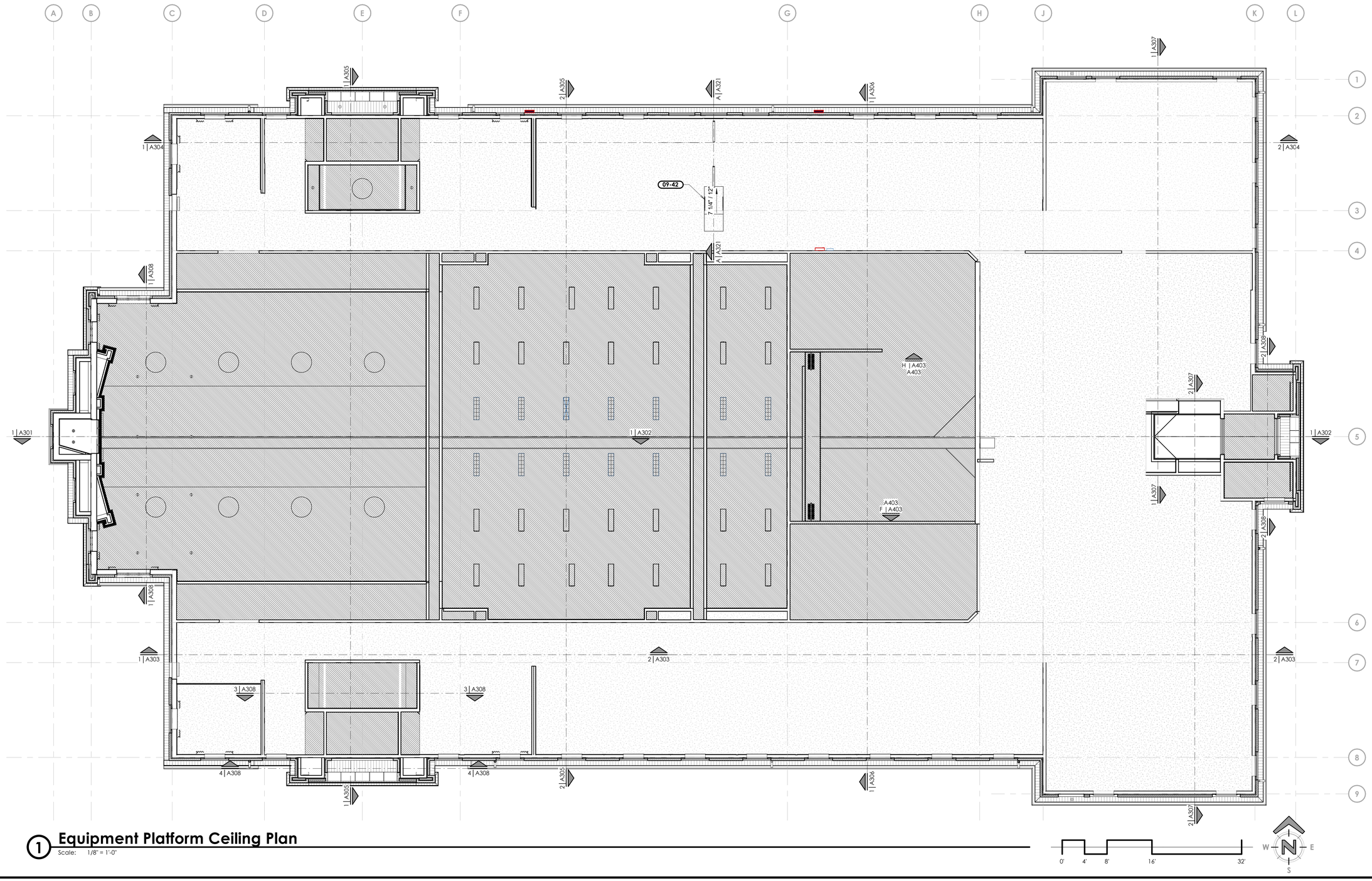

1 Equipment Platform Ceiling Plan

Scale: 1/8" = 1'-0"

0' 4' 8' 16' 32'

W E S

5/29/2025 11:46:30 AM

bhd ARCHITECTS

www.bhdarchitects.com

Phone 801.571.0010
Fax 801.571.0303
Toll Free 888.571.0010

65 East Wadsworth Park Drive
Suite 205 Draper, Utah 84020

LICENSED ARCHITECT
Lafe Theodore Harris
6928898-0301
STATE OF UTAH
29 May 2025

THE CHURCH OF
JESUS CHRIST
OF LATTER-DAY SAINTS

Nibley 6 &
Nibley UT West Stake

Approx. 3410 South 1200 West, Nibley, Utah
41.670809, -111.860775

Date: 29 May 2025
BHD #: 2403
County Parcel: 03:050:0016
Plan Series: Heritage 24
Owner #: 514-4728

Drawing Issue and Revision Schedule

#	Date	Description

Equipment Platform Ceiling Plan

A152

Finishes Schedule

Number	Name	Floor	Base	Wall	Comments
101	Organ Chamber		B1	W1	All surfaces painted black.
102	Rostrum	F1	B1	W1	
103	Chapel	F1	B1	W1	
104	Sacrament Preparation	F1	B1	W1	Chair rail-see E/A702
105	Technology	F1	B1	W1	
106	Cultural Center 1	F3	B2	W3	
107	Cultural Center 2	F3	B2	W3	
108	Platform	F1	B1	W2	Chair rail-see E/A702
109	Custodial	F5	B5	W1/W4	
110	Ramp	F1	B1	W2	Chair rail-see E/A702
111	Ramp	F1	B1	W2	Chair rail-see E/A702
112	Storage	F1	B1	W5	
113	Family Restroom	F5	B3	W1/W4	
114	Vestibule	F2	B1	W1	
115	Waiting	F1	B1	W2	Chair rail-see E/A702
116	Bishop	F1	B1	W2	Chair rail-see E/A702
117	Clerk	F1	B1	W2	Chair rail-see E/A702
118	Foyer	F1	B1	W2	Chair rail-see E/A702
119	Vestibule	F2	B1	W1	
120	Hallway	F1	B1	W2	Chair rail-see E/A702
121	Waiting	F1	B1	W2	
122	Clerk	F1	B1	W2	Chair rail-see E/A702
123	Bishop	F1	B1	W2	Chair rail-see E/A702

Number	Name	Floor	Base	Wall	Comments
124	Room	F1	B1	W2	Chair rail-see E/A702
125	Room	F1	B1	W2	Chair rail-see E/A702
126	Interview	F1	B1	W2	Chair rail-see E/A702
127	Fire Riser	F6	B5	W1	
128	Stair	F6/F7	B5	W1	
129	Serving Area	F4	B3	W1	
130	Room	F1	B1	W2	Chair rail-see E/A702
131	Room	F1	B1	W2	Chair rail-see E/A702
132	Room	F1	B1	W2	Chair rail-see E/A702
133	Resource Center	F1	B1	W2	Chair rail-see E/A702
134	Room	F1	B1	W2	Chair rail-see E/A702
135	Room	F1	B1	W2	Chair rail-see E/A702
136	Hallway	F1	B1	W2	Chair rail-see E/A702
137	Hallway	F1	B1	W2	Chair rail-see E/A702
138	Women	F5	B3	W1/W4	
139	Font	F1	B1	W2	Chair rail-see E/A702
140	Family Restroom	F5	B3	W1/W4	
141	Men	F5	B3	W1/W4	
142	Vestibule	F2	B1	W1	
143	Snow Storage	F7	B5	W1	
144	Interview	F1	B1	W2	Chair rail-see E/A702
145	Waiting	F1	B1	W2	Chair rail-see E/A702
146	Stake President	F1	B1	W2	Chair rail-see E/A702

Number	Name	Floor	Base	Wall	Comments
147	Clerk	F1	B1	W2	Chair rail-see E/A702
148	Stake Council	F1	B1	W2	Chair rail-see E/A702
149	Mother's Room	F1	B1	W2	Chair rail-see E/A702
150	Family Restroom	F5	B3	W1/W4	
151	Room	F1	B1	W2	Chair rail-see E/A702
152	Hallway	F1	B1	W2	Chair rail-see E/A702
153	Room	F1	B1	W2	Chair rail-see E/A702
154	Room	F1	B1	W2	Chair rail-see E/A702
155	Room	F1	B1	W2	Chair rail-see E/A702
156	Room	F1	B1	W2	Chair rail-see E/A702
157	Room	F1	B1	W2	Chair rail-see E/A702
158	Room	F1	B1	W2	Chair rail-see E/A702
159	Room	F1	B1	W2	Chair rail-see E/A702
160	Room	F1	B1	W2	Chair rail-see E/A702
161	Waiting	F1	B1	W2	Chair rail-see E/A702
162	Bishop	F1	B1	W2	Chair rail-see E/A702
163	Clerk	F1	B1	W2	Chair rail-see E/A702
164	Foyer	F1	B1	W2	Chair rail-see E/A702
165	Vestibule	F2	B1	W1	
166	Waiting	F1	B1	W2	Chair rail-see E/A702
167	Clerk	F1	B1	W2	Chair rail-see E/A702
168	Bishop	F1	B1	W2	Chair rail-see E/A702
169	Vestibule	F2	B1	W1	
170	Family Restroom	F5	B3	W1/W4	

Floor Finish Legend

- **F1** Broadloom Carpet (by Owner)
- **F2** Carpet Tile (by Owner)
- **F3** Wood Floor System
- **F4** 12" x 24" Porcelain Tile - Thinset
- **F5** 2" x 2" Porcelain Tile - Thickset
- **F6** Concrete - Painted
- **F7** Stair Treads and Risers - Painted

Threshold Legend

- **T1** Aluminum threshold, see F, H, J, L, M/A553
- **T2** Stone threshold, see E/A553
- **T3** Metal transtion strip, see G/A553
- **T4** Sound control threshold, see N/A553
- **T5** Carpet termination strip

Note:
For finishes in the Equipment Platform, see A102.
For finishes in the Storage Building, see C801.
For ceiling finishes, see A151.

Base Legend

- **B1** Carpet base (by owner)
- **B2** Metal angle
- **B3** Tile base, Refer to interior elevations
- **B5** Rubber base

Wall Finish Legend

- **W1** Painted gypsum board
- **W2** Sisal wall covering wainscot on gypsum board with chair rail and painted gypsum board above
- **W3** Sisal wall covering on gypsum board
- **W4** Tile - Refer to interior elevations
- **W5** Sisal wall covering on wall sheathing

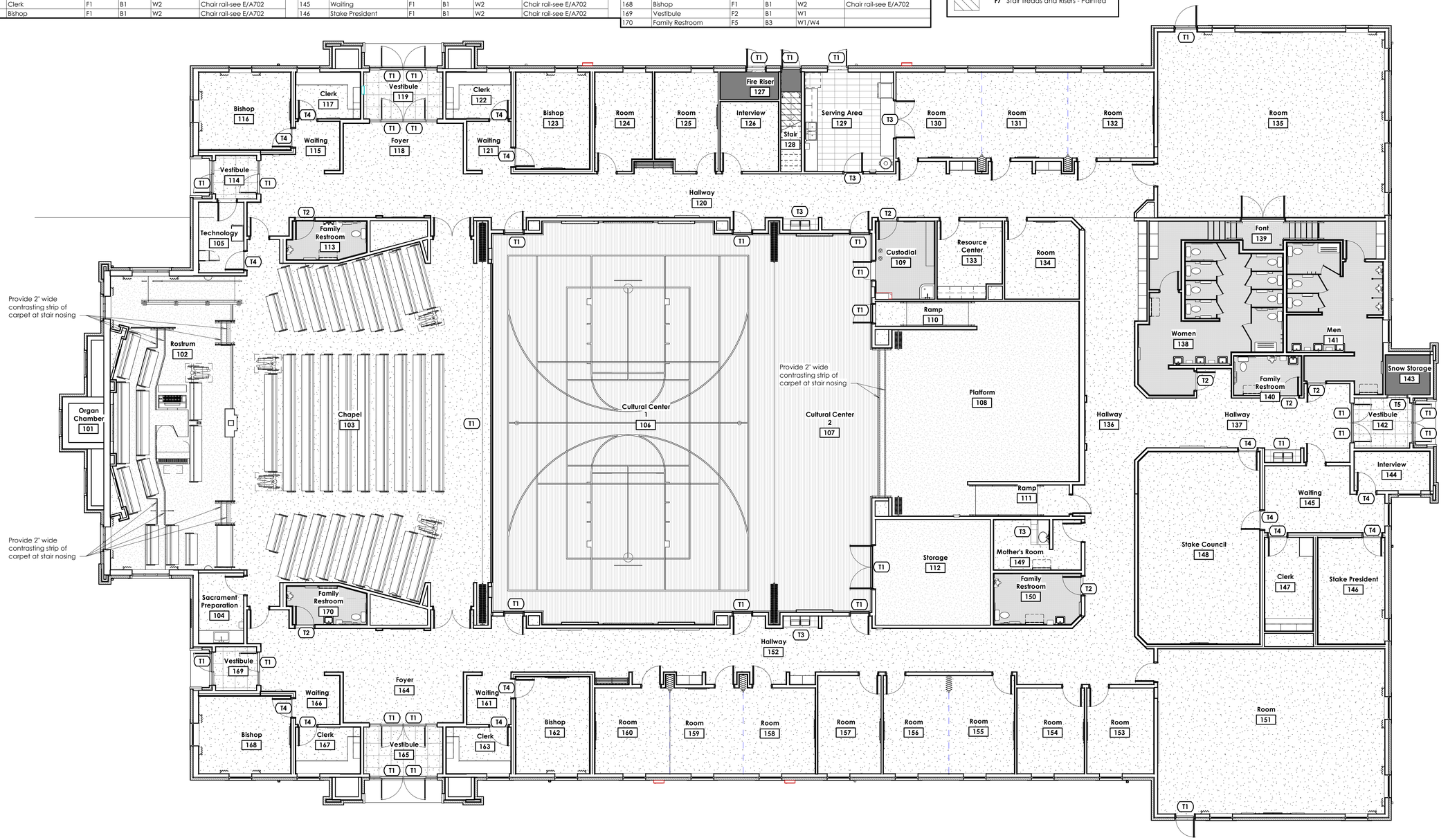

1 Main Floor Finishes Plan

Scale: 1/8" = 1'-0"

5/29/2025 9:31:15 AM

bhd ARCHITECTS
www.bhdarchitects.com
Phone 801.571.0010
Fax 801.571.0303
Toll Free 888.571.0010
65 East Wadsworth Park Drive
Suite 205 Draper, Utah 84020

LICENSED ARCHITECT
Lafe Theodore Harris
6278-0301
23 MAY 2025
STATE OF UTAH

THE CHURCH OF JESUS CHRIST OF LATTER-DAY SAINTS

Nibley 6 & Nibley UT West Stake

Approx. 3410 South 1200 West, Nibley, Utah
41.670809, -111.860775

BHD #: 2403
Date: 29 May 2025
County Parcel: 03050-0016
Plan Series: Heritage 24
Owner #: 514-4728

Drawing Issue and Revision Schedule

#	Date	Description
1	29 May 2024	Bid Documents

Main Floor Finishes Plan

A161

Pew Schedule

Type Mark	Count	Pew Length	Seating Length	Pew Occupants	Total Occupants
P1	1	5' - 3"	4' - 11"	3	3
P2	5	31' - 3"	5' - 11"	3	15
P3	2	13' - 2"	6' - 3"	4	8
P5	2	15' - 6"	7' - 5"	4	8
P16	1	9' - 3"	8' - 11"	5	5
P7	1	10' - 8"	10' - 4"	6	6
P8	4	43' - 0"	10' - 5"	6	24
P9	6	65' - 0"	10' - 6"	7	42
P10	2	22' - 5"	10' - 10 1/2"	7	14
P11	2	24' - 0"	11' - 8"	7	14
P12	2	25' - 8"	12' - 6"	8	16
P13	1	13' - 4"	13' - 0"	8	8
P14	1	16' - 0"	15' - 8"	10	10
P15	9	201' - 0"	22' - 0"	14	126
39	39	495' - 6"			299

Drapery Dimensioning

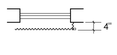

Single Window Type "F"
No scale

The dimensions are for reference only. It is the responsibility of the drapery installation contractor to provide field measurements to insure proper installation.

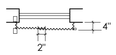

Single Window Type "P"
No Scale

1. Length = 4" Below window sill to 4" above window head
2. Fullness = 2 1/2 Times the window width
3. 4" Double hems and headings.
4. Stackoff of 1/3 the window width.

Window Covering Schedule

Room #	Room Name	Single	Double	Remarks
102	Rostrum		4	Casement Drape and Blackout Drape
116	Bishop		2	Casement
123	Bishop		1	Casement
136	Room	3	2	Casement
147	Stake President	1		Casement
152	Room	2	2	Casement
163	Bishop		1	Casement
169	Bishop		2	Casement

General Notes

A. Provide solid blocking in the walls at all door stops, visual display boards, toilet compartments, countertop & lavatory supports, wall mounted data rack and at all other equipment & accessory locations per Detail G/A554.

Keyed Notes

12-2 Casement and blackout drape.
12-5 Casement drape.
27-6 Television monitor. See technology sheets.

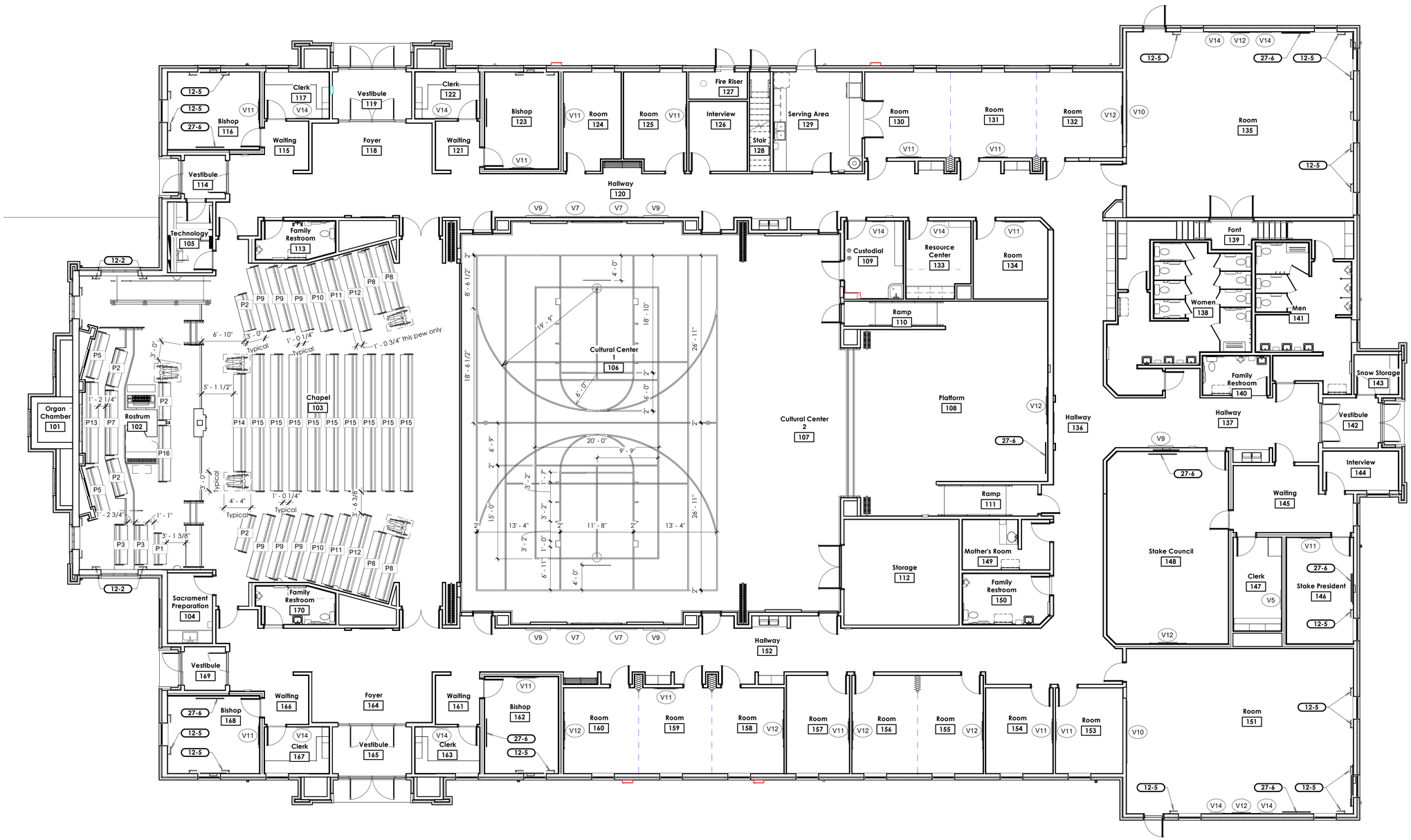

1 Main Floor Furnishings Plan

Scale: 1/8" = 1'-0"

0' 4' 8' 16' 32'

5/29/2025 9:31:20 AM

bhd ARCHITECTS
www.bhdarchitects.com
Phone 801.571.0010
Fax 801.571.0303
Toll Free 888.571.0010
65 East Wadsworth Park Drive
Suite 205 Draper, Utah 84020

LICENSED ARCHITECT
Late
Theodore
Harris
23 MAY 2025
6278-0301
STATE OF UTAH

THE CHURCH OF
JESUS CHRIST
OF LATTER-DAY SAINTS

Nibley 6 &
Nibley UT West Stake

Approx. 3410 South 1200 West, Nibley, Utah
41.670809, -111.860775

BHD #: 2403
County Parcel: 03.050.0016
Plan Series: Heritage 24
Owner #: 514-4728
Date: 29 May 2025

Drawing Issue and Revision Schedule

#	Date	Description
1	29 May 2024	Bid Documents

Main Floor Furnishings Plan

A162

General Notes

A. Refer to Sheet A164 for the Building Signage Schedule and Details.

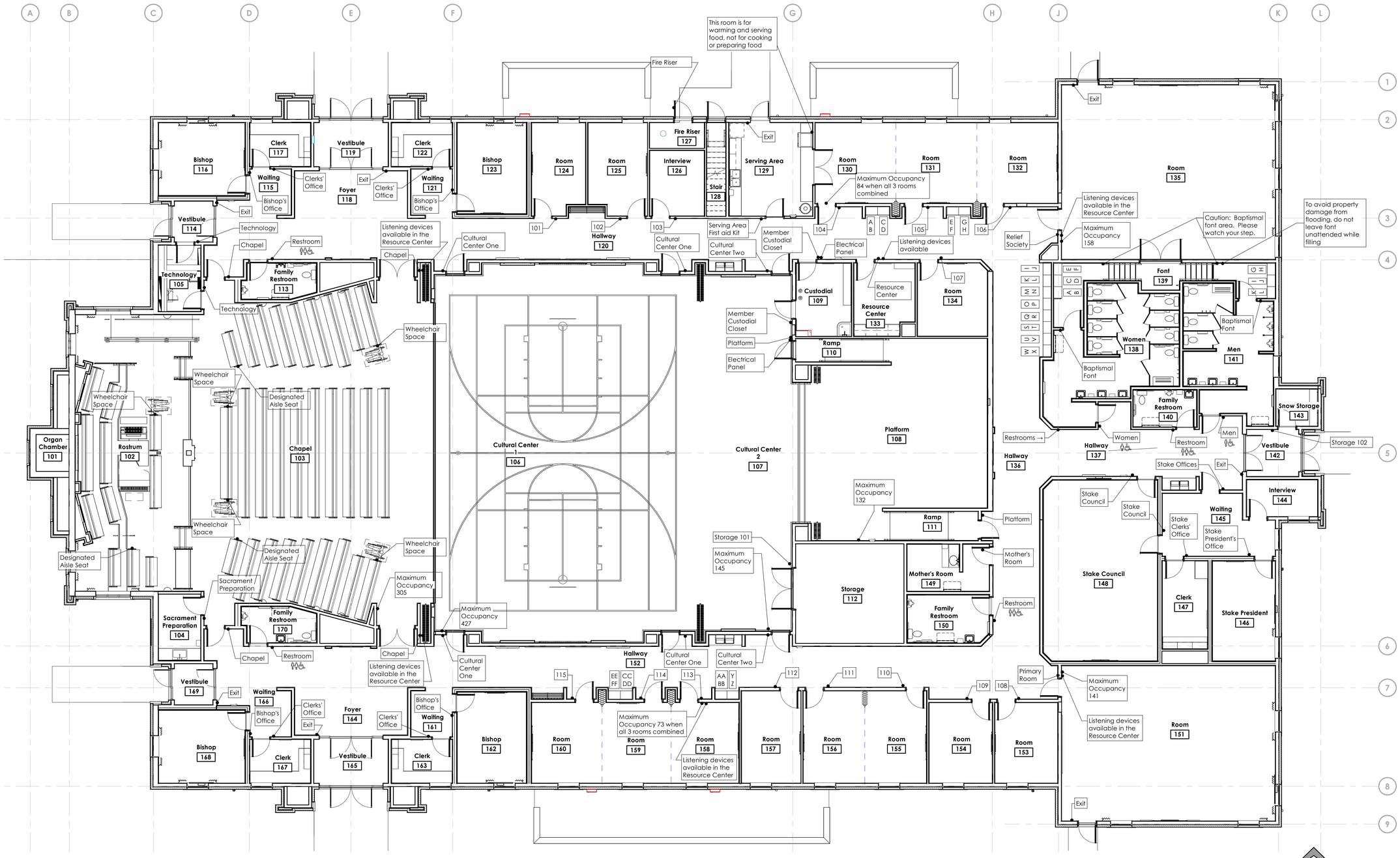

1 Main Floor Signage Plan

Scale: 1/8" = 1'-0"

bhd ARCHITECTS
www.bhdarchitects.com
Phone 801.571.0010
Fax 801.571.0303
Toll Free 888.571.0010
65 East Wadsworth Park Drive
Suite 205 Draper, Utah 84020

LICENSED ARCHITECT
Lafe Theodore Harris
6278301
23 MAY 2025
STATE OF UTAH

THE CHURCH OF JESUS CHRIST OF LATTER-DAY SAINTS

Nibley 6 & Nibley UT West Stake

Approx. 3410 South 1200 West, Nibley, Utah
41.670809, -111.860775

Owner #: 514-4728
Plan Series: Heritage 24
County Parcel: 03.030.0001.6
BHD #: 2403
Date: 29 May 2025

Drawing Issue and Revision Schedule

#	Date	Description

Main Floor Signage Plan

A163

5/29/2025 9:31:25 AM

Interior Building Signage Schedule

Furnish all signs with braille

Signage Text	Quantity	Size	Mounting	Plan Room #
101	1	6" x 6"	A/A164	124
102	1	6" x 6"	A/A164	125
103	1	6" x 6"	A/A164	126
104	1	6" x 6"	A/A164	130
105	1	6" x 6"	A/A164	131
106	1	6" x 6"	A/A164	132
107	1	6" x 6"	A/A164	135
108	1	6" x 6"	A/A164	153
109	1	6" x 6"	A/A164	154
110	1	6" x 6"	A/A164	155
111	1	6" x 6"	A/A164	156
112	1	6" x 6"	A/A164	157
113	1	6" x 6"	A/A164	158
114	1	6" x 6"	A/A164	159
115	1	6" x 6"	A/A164	160
Storgae 101	1	6" x 6"	A/A164	112
Storage 102	1	6" x 6"	A/A164	143
A thru FF (flat sign)	1 each	6" x 2"	D, E/A164	120, 137, 153
A thru L (flat sign)	1 each	6" x 2"	D, E/A164	139
Maximum Occupancy 427	1	6" x 6"	A/A164	106
Maximum Occupancy 145	1	6" x 6"	A/A164	107
Maximum Occupancy 132	1	6" x 6"	A/A164	108
Maximum Occupancy 305	1	6" x 6"	A/A164	103
Maximum Occupancy 73 when all 3 rooms combined	1	6" x 6"	A/A164	158, 159, 160
Maximum Occupancy 84 when all 3 rooms combined	1	6" x 6"	A/A164	130, 131,132
Maximum Occupancy 158	1	6" x 6"	A/A164	135
Maximum Occupancy 141	1	6" x 6"	A/A164	151
Bishop's Office - Ward Name	4	6" x 6"	A/A164	116, 123, 163, 169
Chapel	2	6" x 6"	A/A164	103
Clerks' Office	4	6" x 6"	A/A164	117, 122, 148, 164, 168
Cultural Center One	4	6" x 6"	A/A164	106
Cultural Center Two	2	6" x 6"	A/A164	107
Electrical Panel	3	6" x 6"	B/A164	108, 109
Exit (raised characters)	8	6" x 6"	A/A164	114, 119, 143, 166, 170
Stake Council	2	6" x 6"	A/A164	149
Fire Riser (Exterior red over white gravoply)	1	4" x 6"	C/A164	127
Platform	2	6" x 6"	B/A164	108
Listening Devices Available in Resource Center	2	6" x 6"	B/A164	103
Listening Devices Available	1	6" x 6"	B/A164	134
Baptismal Font	2	6" x 6"	A/A164	140
Resource Center	1	6" x 6"	B/A164	134
Member Custodial Closet First Aid Kit	2	6" x 6"	A/A164	109
Men	1	6" x 6"	A/A164	142
Women	1	6" x 6"	A/A164	139
Mothers' Room	1	6" x 6"	A/A164	133
Primary Room	1	6" x 6"	A/A164	152
Relief Society	2	6" x 6"	A/A164	136
Restroom	5	6" x 6"	A/A164	113, 137, 140, 150, 171
Serving Area	1	6" x 6"	A/A164	129
Stake President's Office	1	6" x 6"	A/A164	147
Sacrament Preparation	1	6" x 6"	A/A164	104
Stake Offices	1	6" x 6"	A/A164	146
Technology	2	6" x 6"	A/A164	105
Pew-mounted Wheelchair Space sign (see detail for sign appearance)	7	3" x 3"	G/A164	102, 103
Pew-mounted Designated Aisle Seat sign (see detail for sign appearance)	3	3" x 6"	G/A164	102, 103
This room is for warming and serving food, not for cooking or preparing food.	1	6" x 6"	Mount above the backsplash on the wall to the left of the range.	129
Caution: Baptismal font entry. Please watch your step.	2	6" x 6"	A/A164 sim	140
To avoid property damage from flooding, do not leave font unattended while filling.	1	3" x 3"	A/A164 sim	140
Stake Clerk's Office	1	6" x 6"	A/A164	145

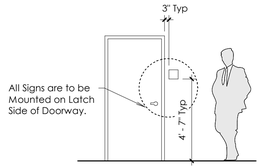

A Molded Sign Mounting
Scale: 1/4" = 1'-0"

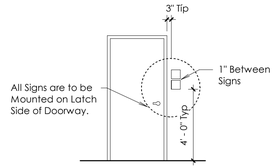

B Double Molded Sign Mounting
Scale: 1/4" = 1'-0"

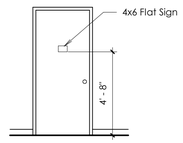

C Flat Sign Mounting on Door
Scale: 1/4" = 1'-0"

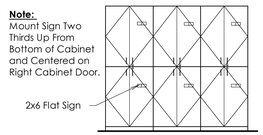

D Flat Sign Mounting On Cabinet
Scale: 1/4" = 1'-0"

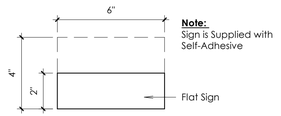

E Flat Sign Detail
Scale: 3" = 1'-0"

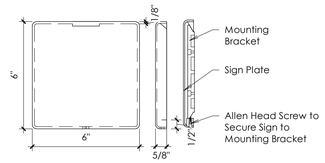

F Sign Plate Detail
Scale: 3" = 1'-0"

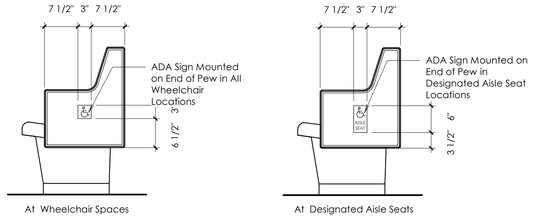

G ADA Sign Mounting On Pew
Scale: 3/4" = 1'-0"

J ADA Sign - Listening Devices
Scale: 3" = 1'-0"

Note:
Leave 1" space between boards when installing tack boards next to glass boards

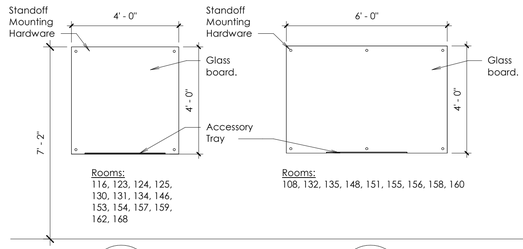

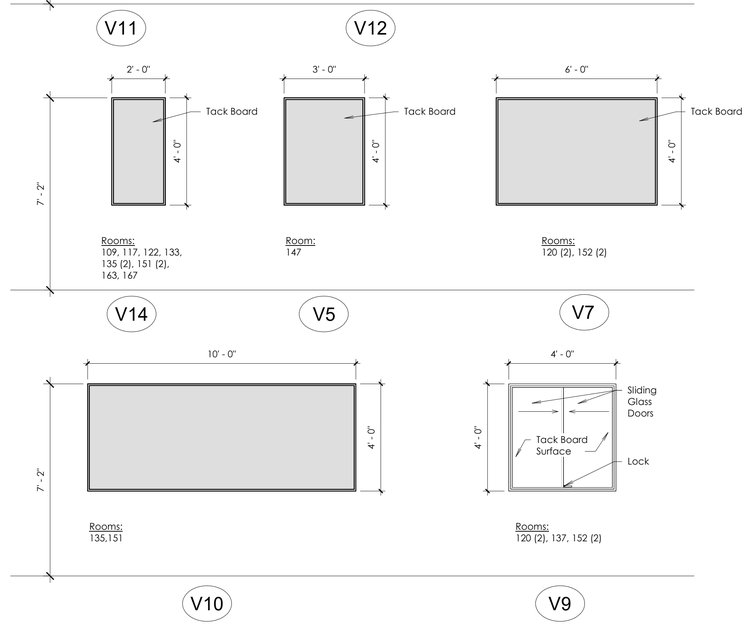

H Visual Display Boards
Scale: 3/8" = 1'-0"

bhd ARCHITECTS
www.bhdarchitects.com
Phone 801.571.0010
Fax 801.571.0303
Toll Free 888.571.0010
65 East Wadsworth Park Drive
Suite 205 Draper, Utah 84020

LICENSED ARCHITECT Lafe Theodore Harris 23 MAY 2025 6278-0301 STATE OF UTAH

THE CHURCH OF JESUS CHRIST OF LATTER-DAY SAINTS

Nibley 6 & Nibley UT West Stake

Approx. 3410 South 1200 West, Nibley, Utah
41.672809, -111.860775

Owner #: 514-4728
Plan Series: Heritage 24
County Parcel: 03:050:0016
BHD #: 2403
Date: 29 May 2025

Drawing Issue and Revision Schedule

#	Date	Description

Signage Schedule and Details

A164

5/29/2025 9:31:26 AM

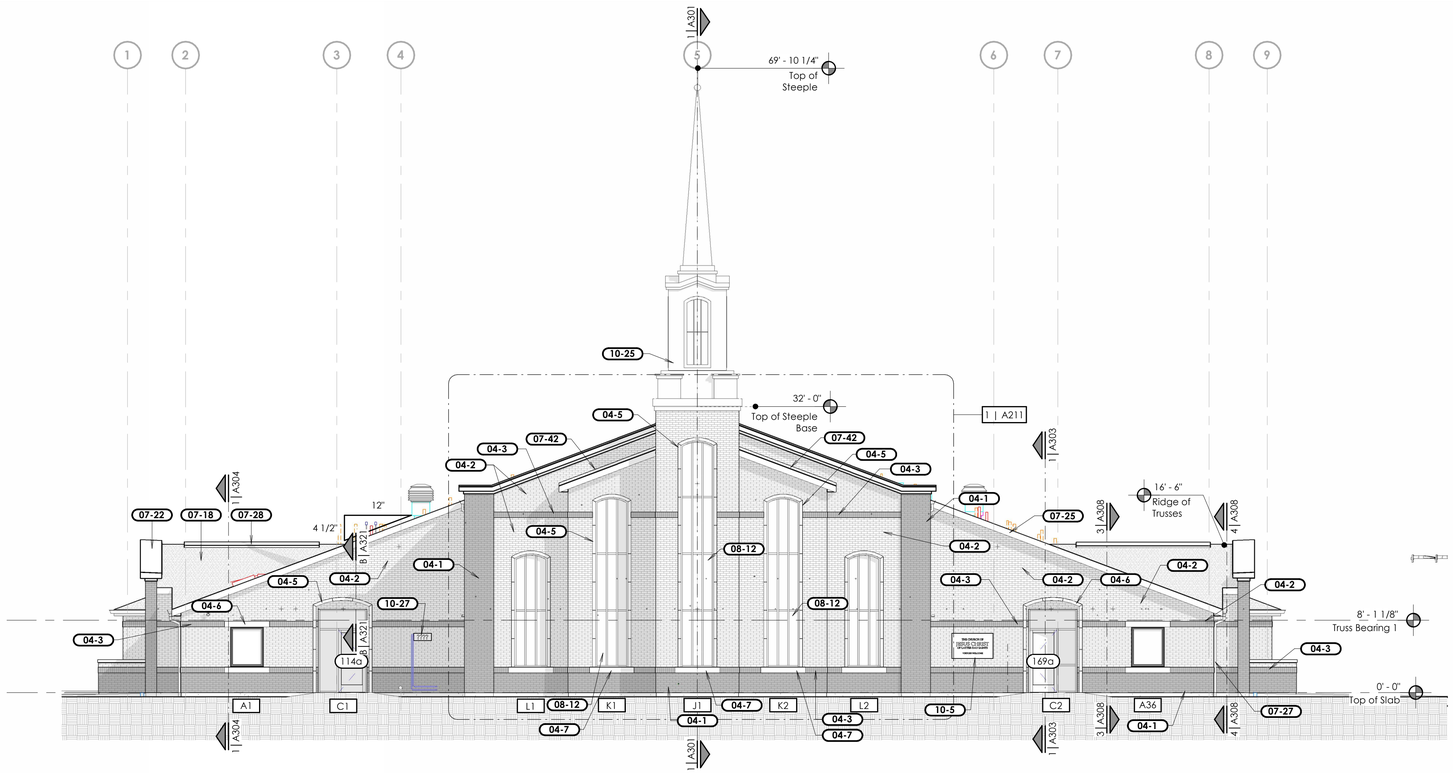

1 Elevation

Scale: 1/8" = 1'-0"

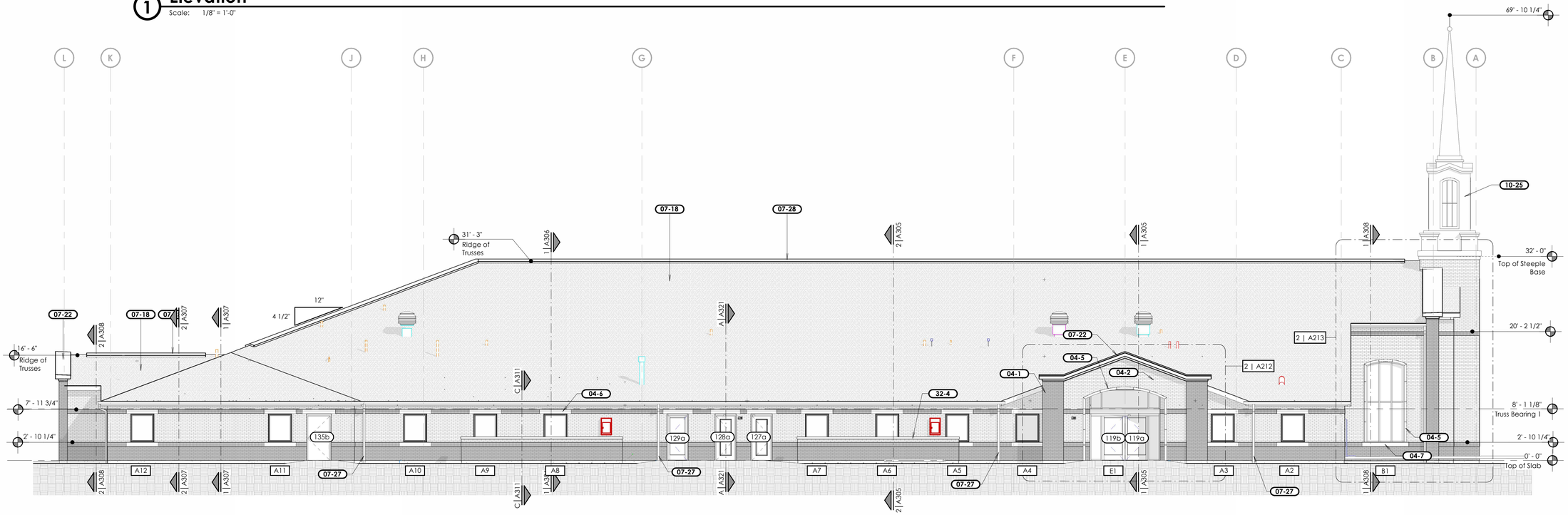

2 Elevation

Scale: 1/8" = 1'-0"

General Notes

A. Install brick expansion joints at 30 feet o.c. minimum, and at inside corners of brick. Coordinate exact locations with the Architect prior to installation.

Keyed Notes

04-1	Brick veneer accent course. Brick Type #2.
04-2	Brick veneer field course. Brick Type #1.
04-3	Brick veneer soldier course. Brick Type #2. Install +1/2" from the face of the field brick.
04-5	Precast concrete entry or window trim.
04-6	Precast concrete window header.
04-7	Precast concrete window sill.
07-18	Asphalt shingle roofing over underlayments. Install secondary underlayment over the entire roof and down the front of the fascia.
07-22	Parapet cap flashing assembly.
07-25	Prefinished metal fascia.
07-27	Prefinished metal downspout. Typical. See G/A522.
07-28	Prefinished metal ridge vent. See A/A522.
07-42	Prefinished metal counterflashing over step flashing. See J/A521.
08-12	Spandrel glass window. See window details.
10-5	Engraved stone sign panel. See C/A511.
10-25	Prefinished aluminum steeple. See A221.
10-27	Engraved stone address sign. See D/A511.
32-4	Mechanical Enclosure Wall. See C and D/C504.

bhd ARCHITECTS
www.bhdarchitects.com
Phone 801.571.0010
Fax 801.571.0303
Toll Free 888.571.0010
65 East Wadsworth Park Drive
Suite 205 Draper, Utah 84020

LICENSED ARCHITECT
Late Theodore Harris
6278-0301
29 MAY 2025
STATE OF UTAH

THE CHURCH OF JESUS CHRIST OF LATTER-DAY SAINTS

Nibley 6 &
Nibley UT West Stake

Approx. 3410 South 1200 West, Nibley, Utah
41.670809, -111.860775

BHD #: 2403
County Parcel: 03050-0016
Plan Series: Heritage 24
Owner #: 514-4728
Date: 29 May 2025

Drawing Issue and Revision Schedule

#	Date	Description

Elevations

A201

5/29/2025 9:31:45 AM

General Notes

A. Install brick expansion joints at 30 feet o.c. minimum, and at inside corners of brick. Coordinate exact locations with the Architect prior to installation.

Keyed Notes

04-1	Brick veneer accent course. Brick Type #2.
04-2	Brick veneer field course. Brick Type #1.
04-5	Precast concrete entry or window trim.
04-6	Precast concrete window header.
04-7	Precast concrete window sill.
07-18	Asphalt shingle roofing over underlayments. Install secondary underlayment over the entire roof and down the front of the fascia.
07-22	Parapet cap flashing assembly.
07-27	Prefinished metal downspout. Typical. See G/A522.
07-28	Prefinished metal ridge vent. See A/A522.
10-25	Prefinished aluminum steeple. See A221.
32-4	Mechanical Enclosure Wall. See C and D/C504.

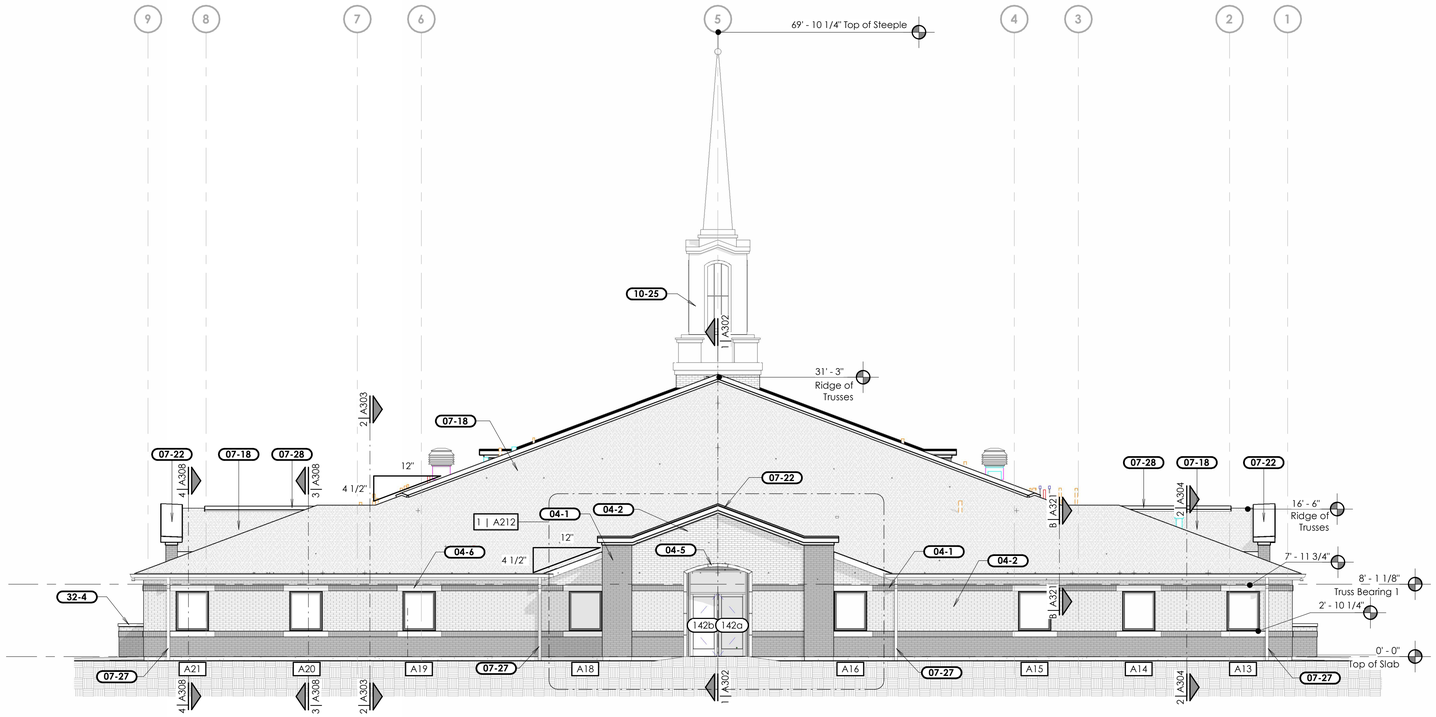

1 North Elevation

Scale: 1/8" = 1'-0"

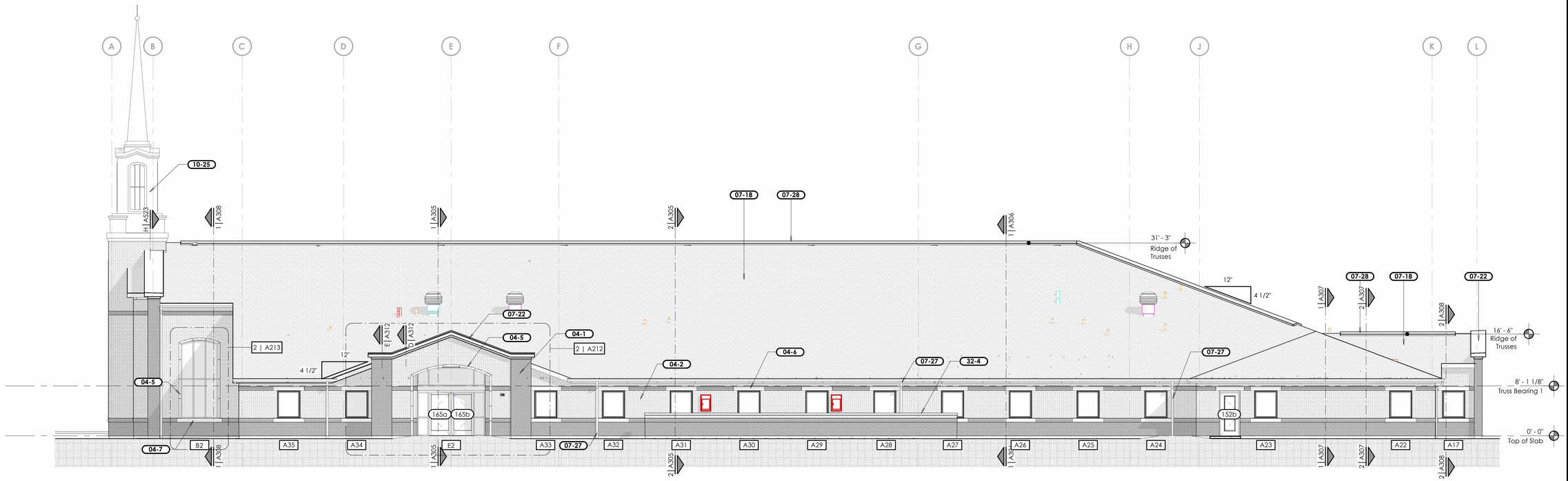

2 East Elevation

Scale: 1/8" = 1'-0"

5/29/2025 9:32:09 AM

bhd ARCHITECTS
www.bhdarchitects.com
Phone 801.571.0010
Fax 801.571.0303
Toll Free 888.571.0010
65 East Wadsworth Park Drive
Suite 205 Draper, Utah 84020

LICENSED ARCHITECT Late Theodore Harris 23 MAY 2025 6276578-0301 STATE OF UTAH

THE CHURCH OF JESUS CHRIST OF LATTER-DAY SAINTS

Nibley 6 & Nibley UT West Stake

Approx. 3410 South 1200 West, Nibley, Utah
41.670809, -111.860775

BHD #: 2403
County Parcel: 03:050:0016
Plan Series: Heritage 24
Owner #: 514-4728
Date: 29 May 2025

Drawing Issue and Revision Schedule

#	Date	Description

Elevations

A202

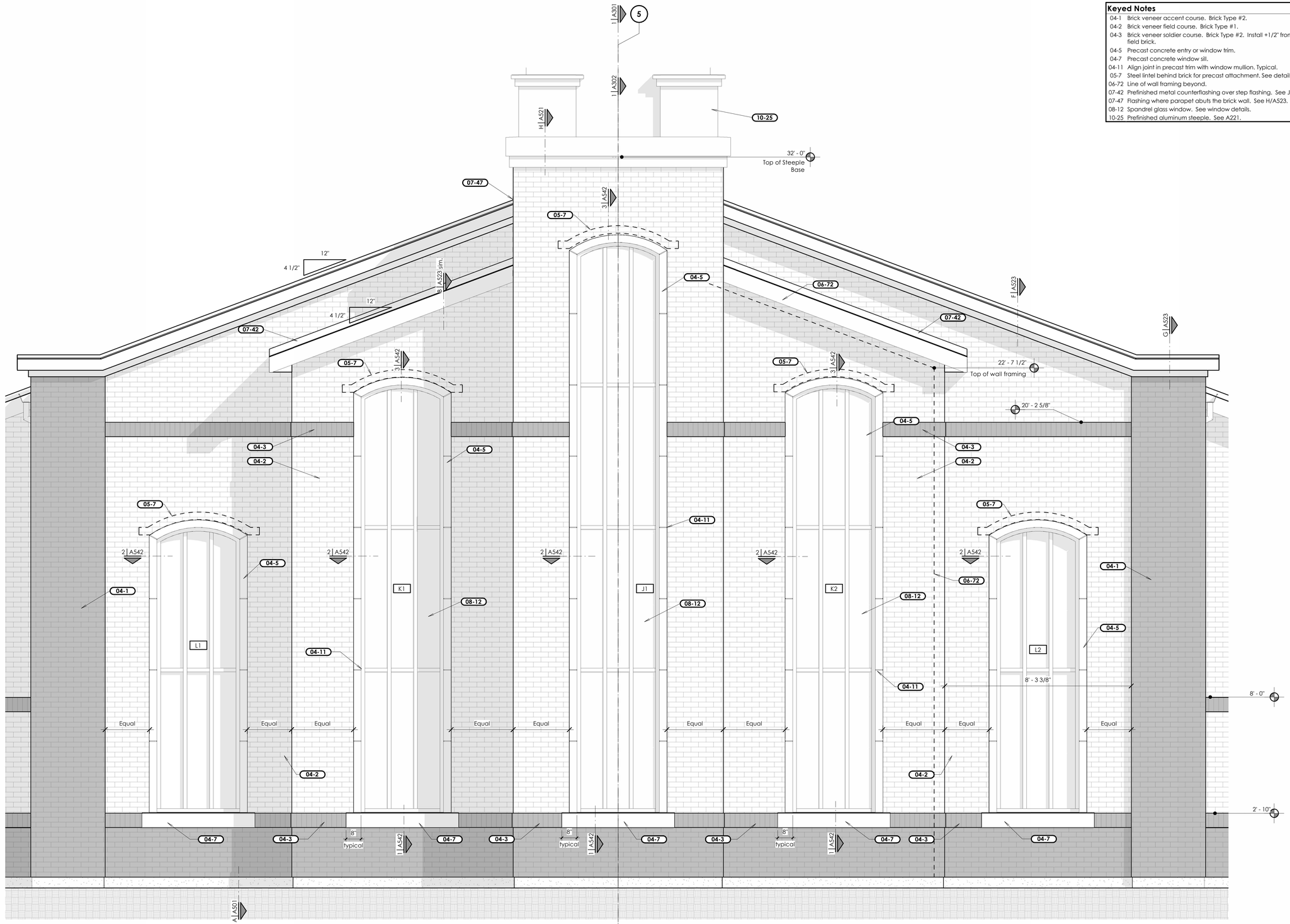

1 Steeple Wall Elevation

Scale: 1/2" = 1'-0"

Keyed Notes

04-1	Brick veneer accent course. Brick Type #2.
04-2	Brick veneer field course. Brick Type #1.
04-3	Brick veneer soldier course. Brick Type #2. Install +1/2" from the face of the field brick.
04-5	Precast concrete entry or window trim.
04-7	Precast concrete window sill.
04-11	Align joint in precast trim with window mullion. Typical.
05-7	Steel lintel behind brick for precast attachment. See details.
06-72	Line of wall framing beyond.
07-42	Prefinished metal counterflashing over step flashing. See J/A521.
07-47	Flashing where parapet abuts the brick wall. See H/A523.
08-12	Spandrel glass window. See window details.
10-25	Prefinished aluminum steeple. See A221.

bhd ARCHITECTS
www.bhdarchitects.com
Phone 801.571.0010
Fax 801.571.0303
Toll Free 888.571.0010
65 East Wadsworth Park Drive
Suite 205 Draper, Utah 84020

LICENSED ARCHITECT
Lafe Theodore Harris
6278301
23 MAY 2025
STATE OF UTAH

THE CHURCH OF JESUS CHRIST OF LATTER-DAY SAINTS

Nibley 6 & Nibley UT West Stake

Approx. 3410 South 1200 West, Nibley, Utah
41.670809, -111.860775

BHD #: 2403
County Parcel: 03050,0016
Plan Series: Heritage 24
Owner #: 514-4728
Date: 29 May 2025

Drawing Issue and Revision Schedule

#	Date	Description

Enlarged Exterior Elevations

A211

5/29/2025 9:32:17 AM

Keyed Notes

04-1	Brick veneer accent course. Brick Type #2.
04-2	Brick veneer field course. Brick Type #1.
04-3	Brick veneer soldier course. Brick Type #2. Install +1/2" from the face of the field brick.
04-5	Precast concrete entry or window trim.
04-6	Precast concrete window header.
04-7	Precast concrete window sill.
05-7	Steel lintel behind brick for precast attachment. See details.
05-10	Steel lintel over window opening. See details.
07-42	Prefinished metal counterflashing over step flashing. See J/A521.

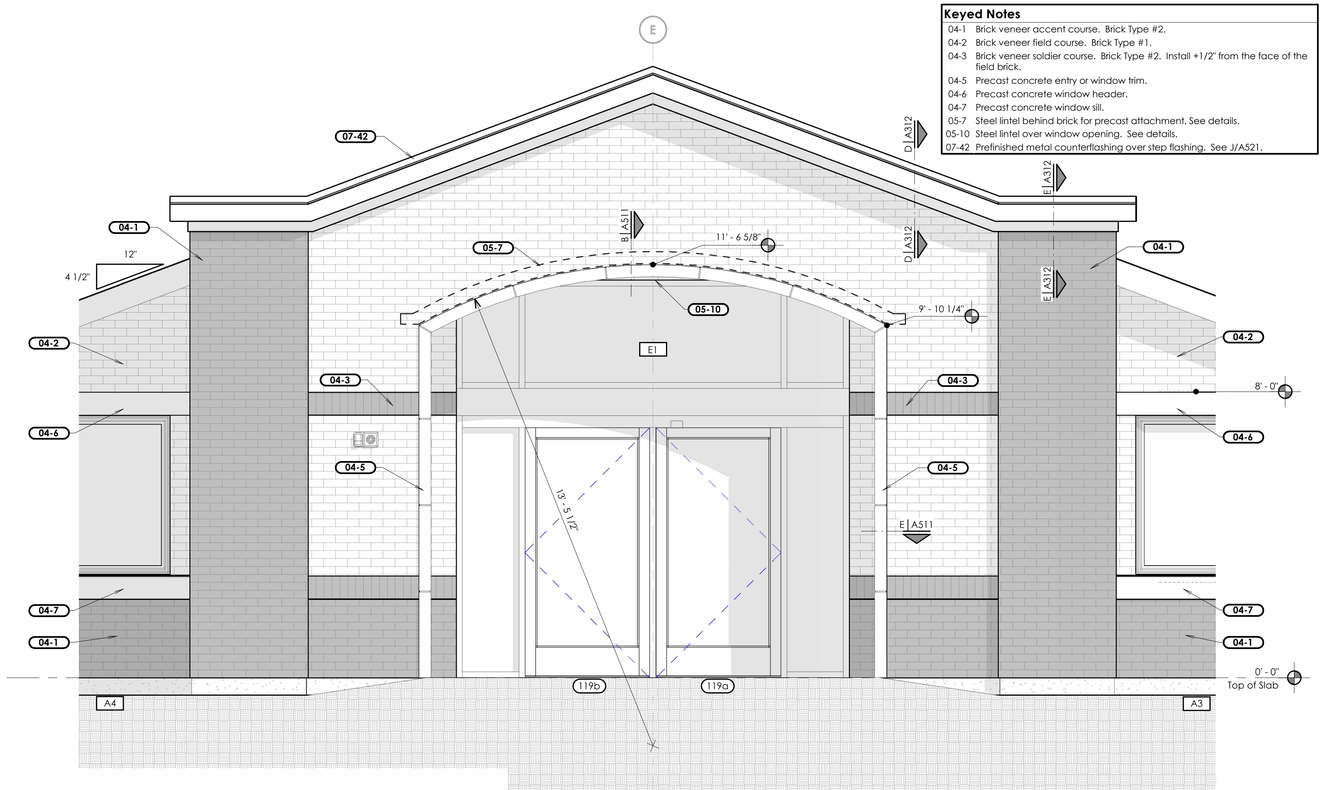

2 Main Entry Elevation

Scale: 1/2" = 1'-0"

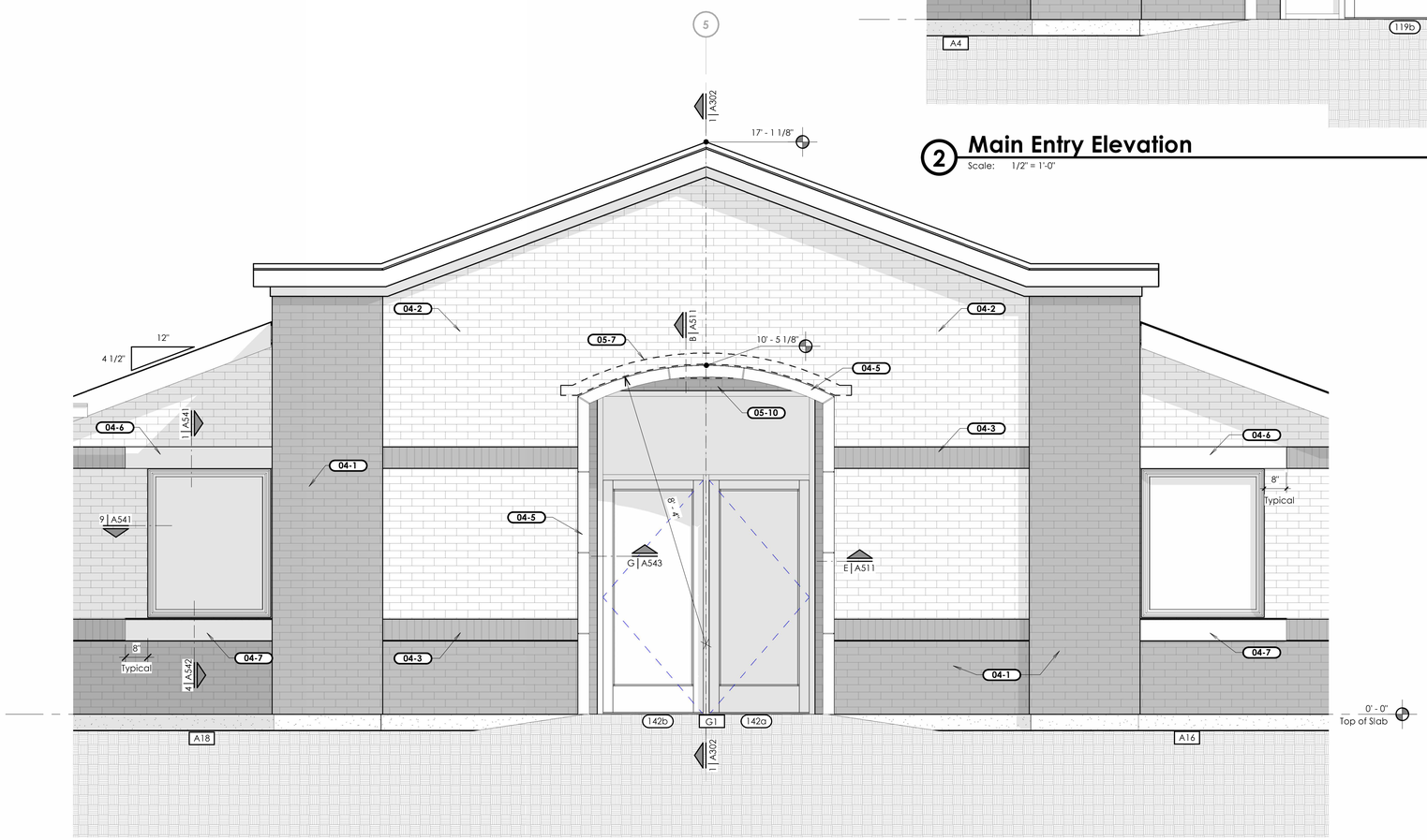

1 Rear Entry Elevation

Scale: 1/2" = 1'-0"

5/29/2025 9:32:24 AM

bhd ARCHITECTS
www.bhdarchitects.com
Phone 801.571.0010
Fax 801.571.0303
Toll Free 888.571.0010
65 East Wadsworth Park Drive
Suite 205 Draper, Utah 84020

LICENSED ARCHITECT Late Theodore Harris 6928898-0301 STATE OF UTAH 29 May 2025

THE CHURCH OF JESUS CHRIST OF LATTER-DAY SAINTS

Nibley 6 & Nibley UT West Stake

Approx. 3410 South 1200 West, Nibley, Utah
41.670809, -111.860775

Date:	BHD #:	County Parcel:	Plan Series:	Owner #:
29 May 2025	2403	03050000016	Heritage 24	514-4728

Drawing Issue and Revision Schedule

#	Date	Description

Enlarged Exterior Elevations

A212

Keyed Notes

04-1	Brick veneer accent course. Brick Type #2.
04-2	Brick veneer field course. Brick Type #1.
04-3	Brick veneer soldier course. Brick Type #2. Install +1/2" from the face of the field brick.
04-5	Precast concrete entry or window trim.
04-7	Precast concrete window sill.
05-7	Steel lintel behind brick for precast attachment. See details.
05-10	Steel lintel over window opening. See details.
07-18	Asphalt shingle roofing over underlayments. Install secondary underlayment over the entire roof and down the front of the fascia.
07-22	Parapet cap flashing assembly.
07-27	Prefinished metal downspout. Typical. See G/A522.
07-28	Prefinished metal ridge vent. See A/A522.
10-25	Prefinished aluminum steeple. See A221.

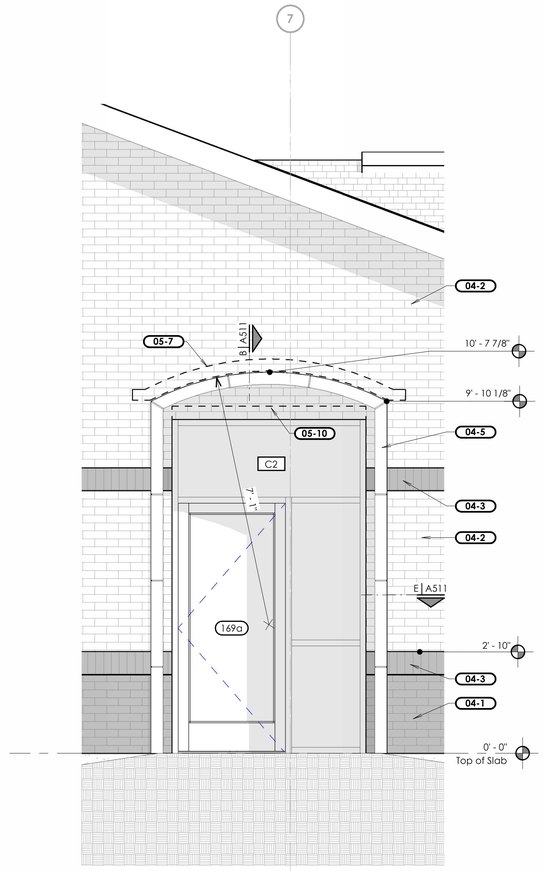

1 Front Entry Elevation

Scale: 1/2" = 1'-0"

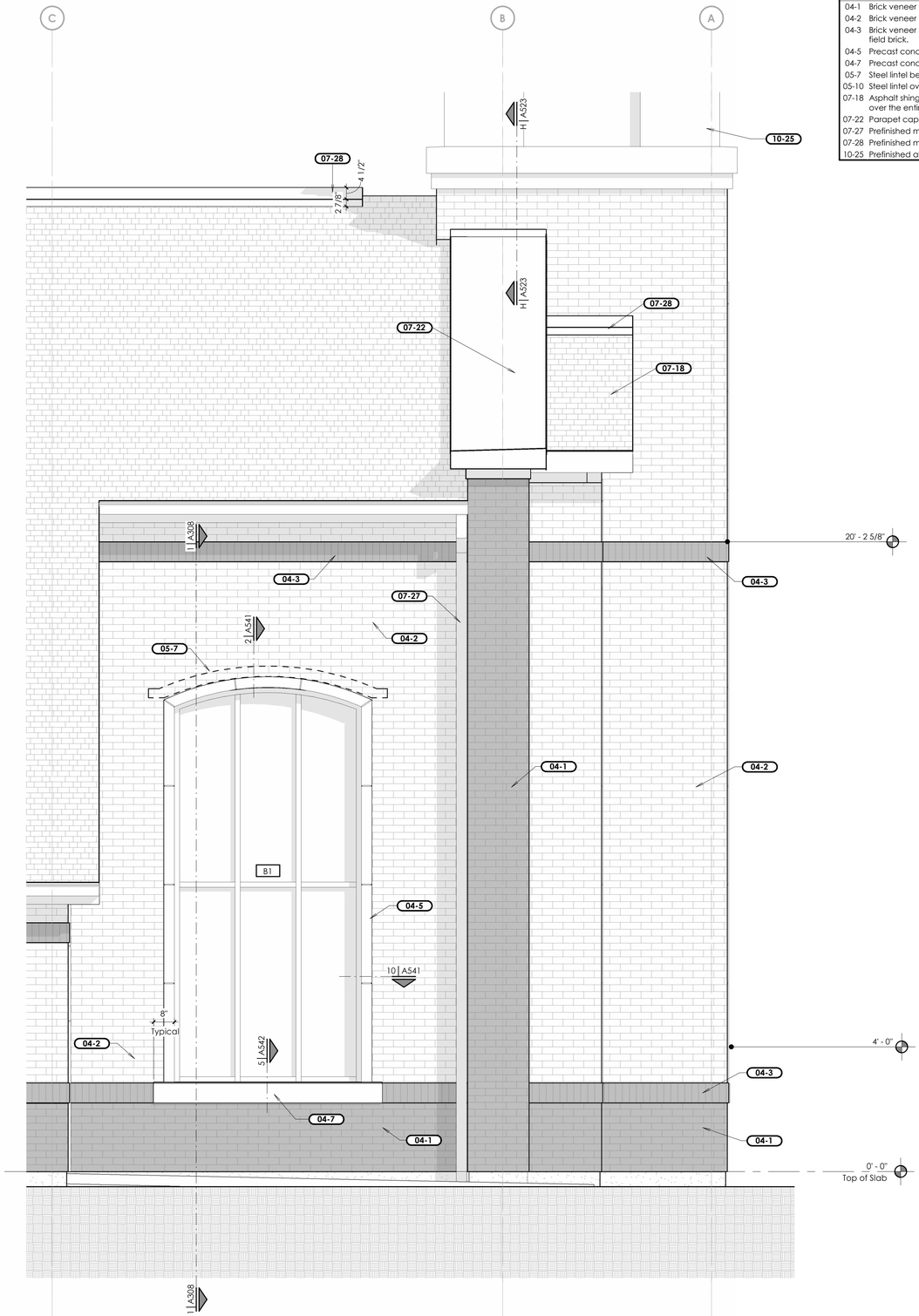

2 Chapel Window Elevation

Scale: 1/2" = 1'-0"

bhd ARCHITECTS
www.bhdarchitects.com
Phone 801.571.0010
Fax 801.571.0303
Toll Free 888.571.0010
65 East Wadsworth Park Drive
Suite 205 Draper, Utah 84020

LICENSED ARCHITECT
Lafe Theodore Harris
7878-0301
29 MAY 2025
STATE OF UTAH

THE CHURCH OF
JESUS CHRIST
OF LATTER-DAY SAINTS

Nibley 6 &
Nibley UT West Stake

Approx. 3410 South 1200 West, Nibley, Utah
41.670809, -111.860775

BHD #: 2403
County Parcel: 03:050:0016
Plan Series: Heritage 24
Owner #: 514-4728
Date: 29 May 2025

Drawing Issue and Revision Schedule

#	Date	Description

Enlarged Exterior Elevations

A213

5/29/2025 9:32:28 AM

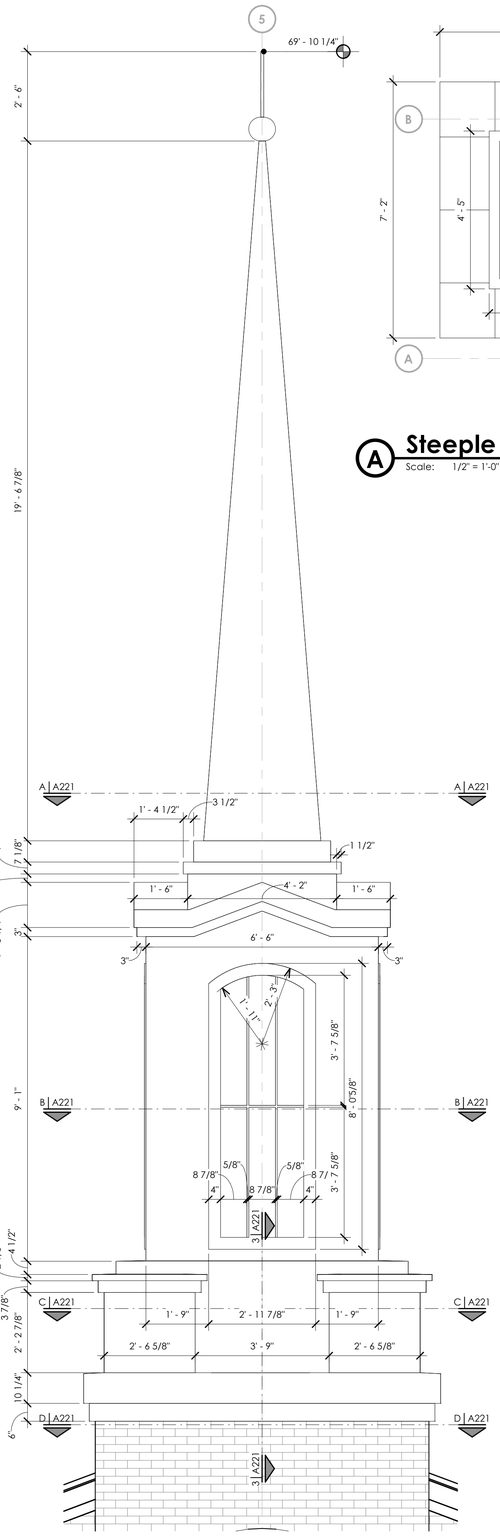

1 Steeple Elevation
Scale: 1/2" = 1'-0"

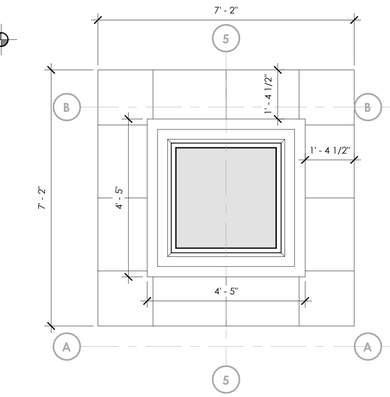

A Steeple Through Spire
Scale: 1/2" = 1'-0"

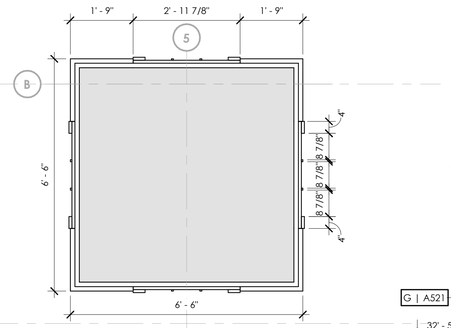

B Steeple Through Windows
Scale: 1/2" = 1'-0"

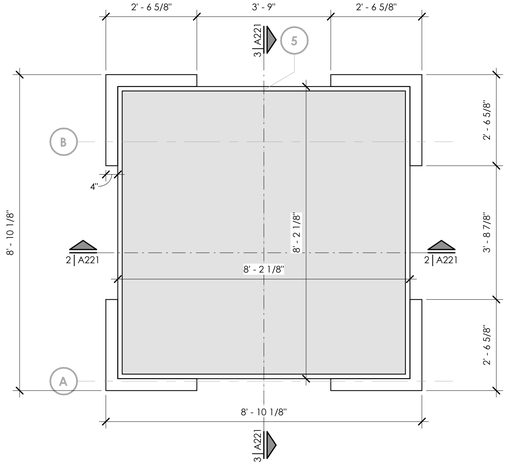

C Steeple Pedestal
Scale: 1/2" = 1'-0"

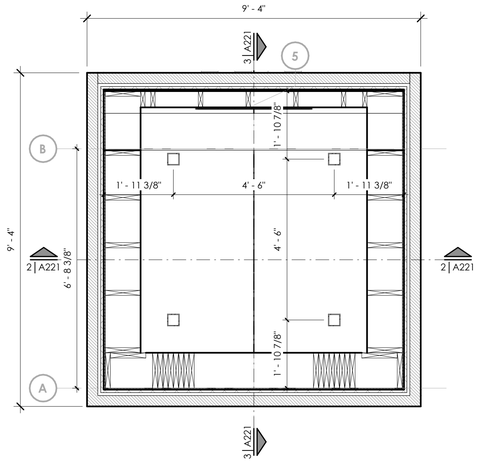

D Steeple Base
Scale: 1/2" = 1'-0"

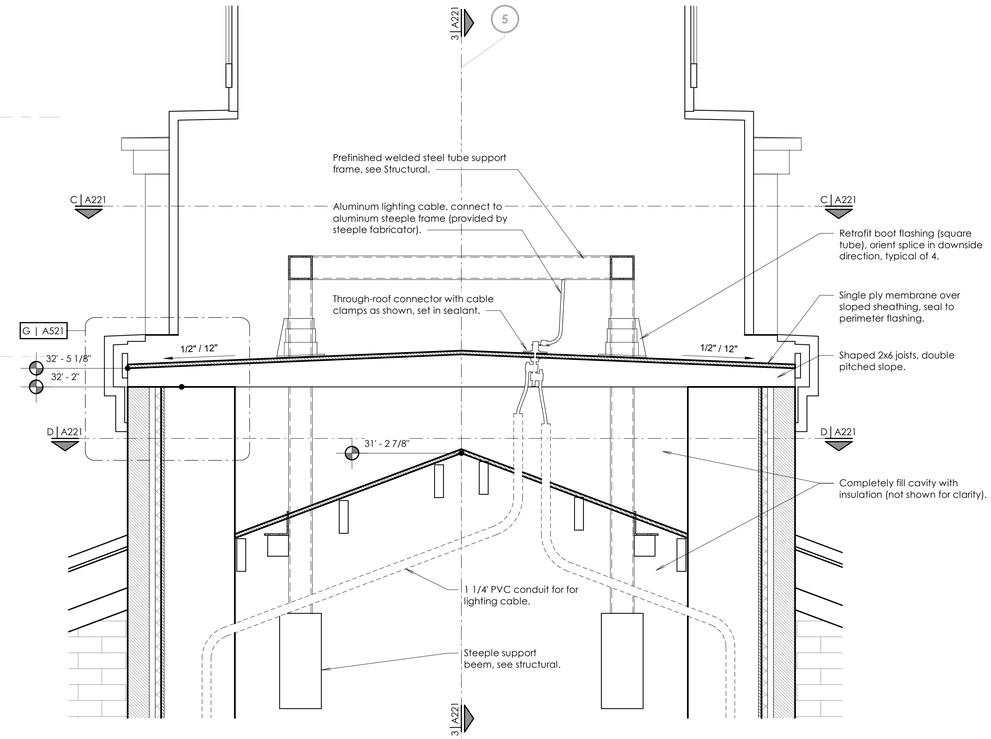

2 Steeple Support
Scale: 1" = 1'-0"

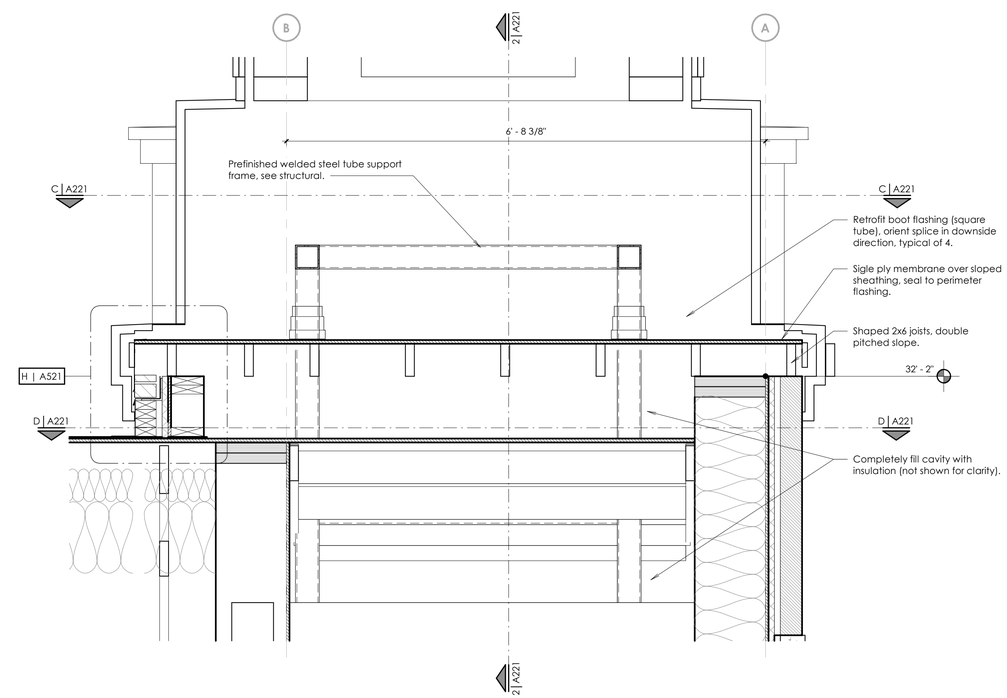

3 Steeple Support
Scale: 1" = 1'-0"

bhd ARCHITECTS
www.bhdarchitects.com
Phone 801.571.0010
Fax 801.571.0303
Toll Free 888.571.0010
65 East Wadsworth Park Drive
Suite 205 Draper, Utah 84020

LICENSED ARCHITECT
Lafe Theodore Harris
6978898-0301
29 May 2025
STATE OF UTAH

THE CHURCH OF
JESUS CHRIST
OF LATTER-DAY SAINTS

Nibley 6 & Nibley UT West Stake

Approx. 3410 South 1200 West, Nibley, Utah
41.670809, -111.860775

Date:	BHD #:	County Parcel:	Plan Series:	Owner #:
29 May 2025	2403	03:050:0016	Heritage 24	514-4728

Drawing Issue and Revision Schedule

#	Date	Description

Enlarged Steeple Elevations and Details

A221

5/29/2025 9:32:30 AM

Keyed Notes

06-3	Attic access catwalk above. See A/A552. Center catwalk in truss at the high point of the truss.
07-16	Below-grade vapor retarder system.
07-28	Prefinished metal ridge vent. See A/A522.
09-3	Painted and textured 5/8" gypsum board.
09-18	6'-0" x 4'-0" sound-absorptive acoustical panels. See K/A554.
11-6	Basketball backboard and support frame. See E/A531.
11-8	Safety wall padding furnished by owner and installed by contractor. See detail sheets.

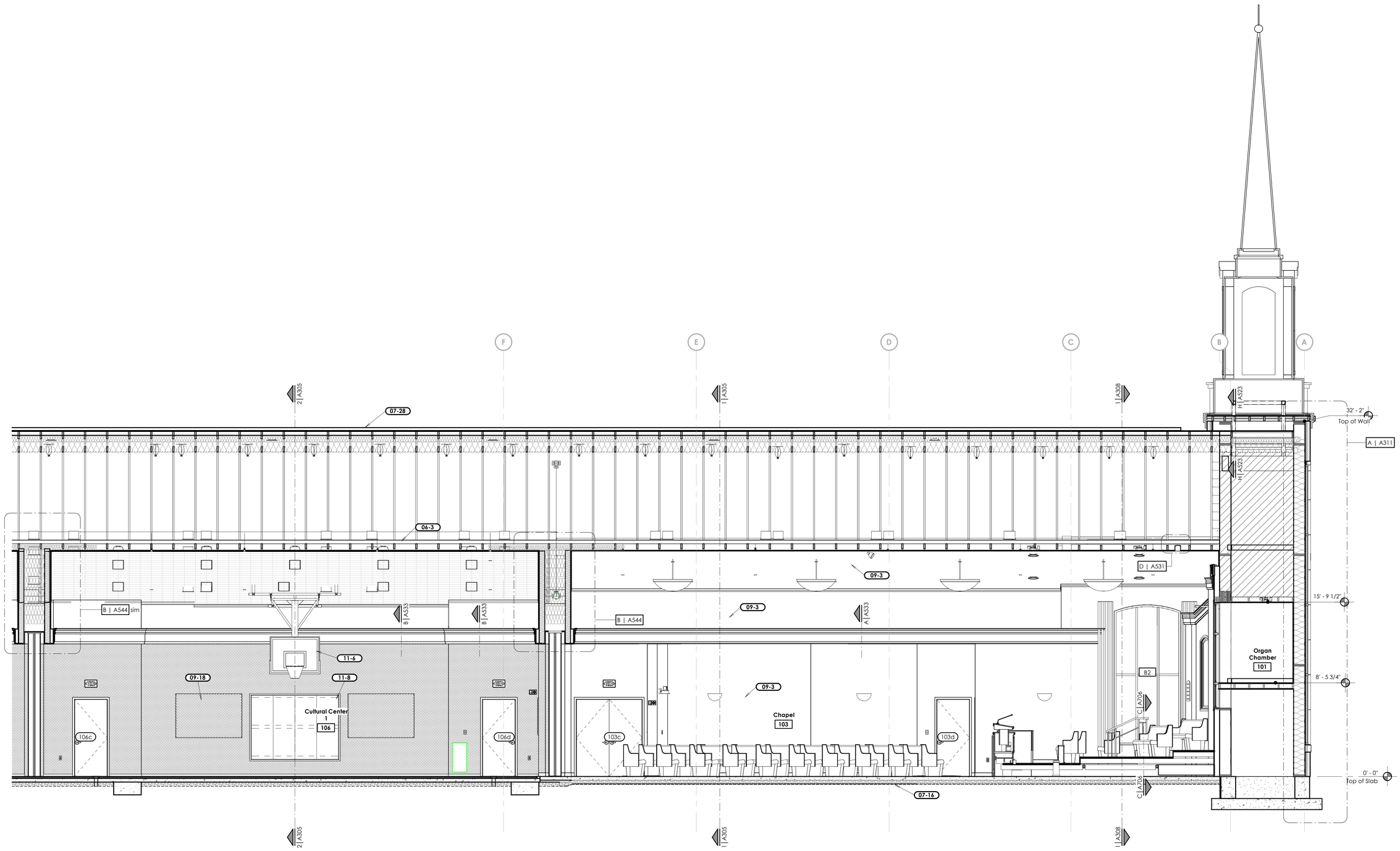

1 Building Section

Scale: 1/4" = 1'-0"

5/29/2025 9:32:34 AM

bhd ARCHITECTS
www.bhdarchitects.com
Phone 801.571.0010
Fax 801.571.0303
Toll Free 888.571.0010
65 East Wadsworth Park Drive
Suite 205 Draper, Utah 84020

LICENSED ARCHITECT
Lafe Theodore Harris
6928-0301
STATE OF UTAH
29 May 2025

THE CHURCH OF
JESUS CHRIST
OF LATTER-DAY SAINTS

Nibley 6 &
Nibley UT West Stake

Approx. 3410 South 1200 West, Nibley, Utah
41.670809, -111.860775

Date: 29 May 2025
BHD #: 2403
County Parcel: 03:050:0016
Plan Series: Heritage 24
Owner #: 514-4728

Drawing Issue and Revision Schedule

#	Date	Description

Building Sections

A301

Keyed Notes

04-5	Precast concrete entry or window trim.
07-28	Prefinished metal ridge vent. See A/A522.
09-16	Sisal wall covering.
10-4	Display case.
10-22	Semi-recessed fire extinguisher cabinet. See E/A554 and code plans.
22-12	Electric water cooler. Provide solid blocking in wall as required by manufacturer. See plumbing sheets.

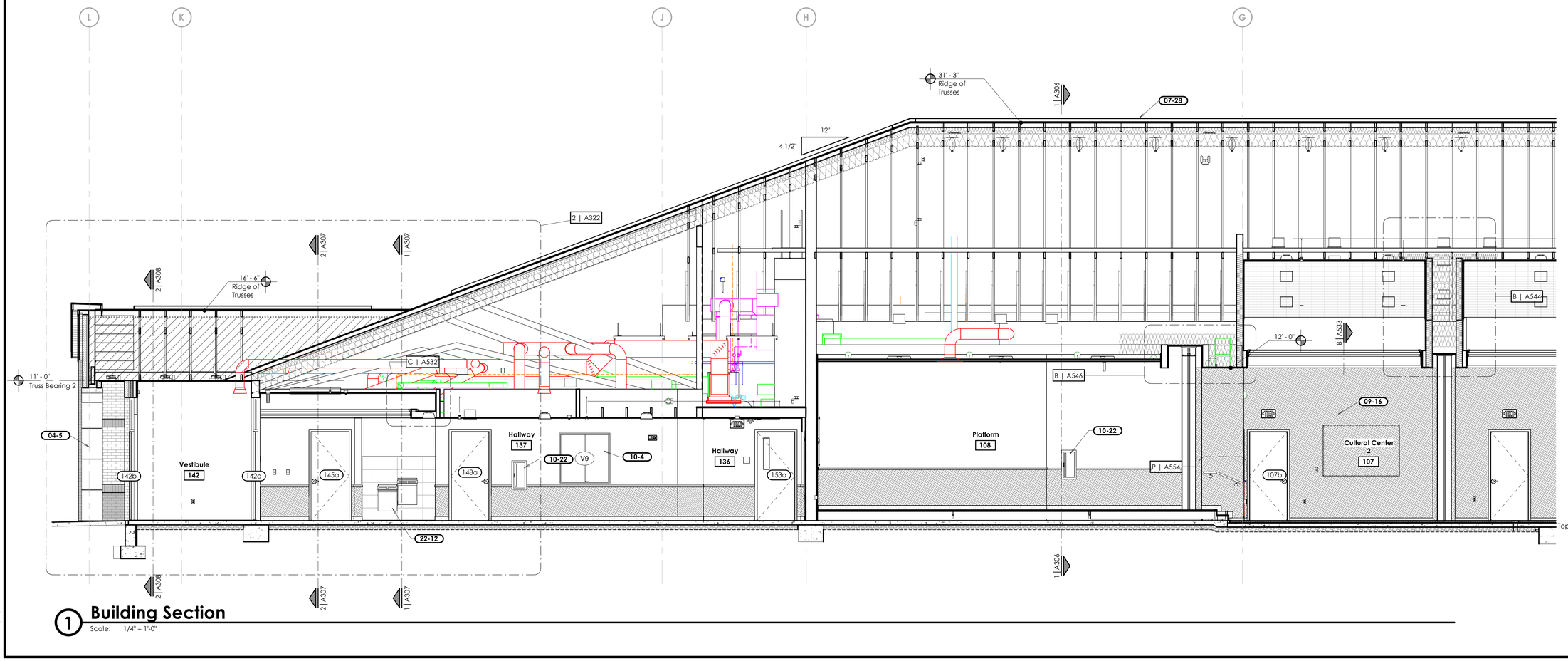

1 **Building Section**
Scale: 1/4" = 1'-0"

5/29/2025 9:32:37 AM

bhd ARCHITECTS
www.bhdarchitects.com
Phone 801.571.0010
Fax 801.571.0303
Toll Free 888.571.0010
65 East Wadsworth Park Drive
Suite 205 Draper, Utah 84020

LICENSED ARCHITECT
Late
Theodore
Harris
6278-0301
23 MAY 2025
STATE OF UTAH

THE CHURCH OF
JESUS CHRIST
OF LATTER-DAY SAINTS

Nibley 6 &
Nibley UT West Stake

Approx. 3410 South 1200 West, Nibley, Utah
41.670809, -111.860775

BHD #: 2403
County Parcel: 03:050:0016
Plan Series: Heritage 24
Owner #: 514-4728
Date: 29 May 2025

sim

Drawing Issue and Revision Schedule

#	Date	Description

Building Sections

A302

Keyed Notes

06-21	Hardwood chair rail. See E/A702. At windows, see F/A702.
07-16	Below-grade vapor retarder system.
07-28	Prefinished metal ridge vent. See A/A522.
09-14	Carpet base. See finish schedule and specifications.
09-16	Sisal wall covering.
09-47	12" x 24" porcelain tile.
10-3	Lock, typical.
10-4	Display case.
10-22	Semi-recessed fire extinguisher cabinet. See E/A554 and code plans.
22-12	Electric water cooler. Provide solid blocking in wall as required by manufacturer. See plumbing sheets.
22-15	Vent through roof, flue, or other roof penetration. Typical. See roof details and mechanical and plumbing sheets. Paint all roof penetrations.

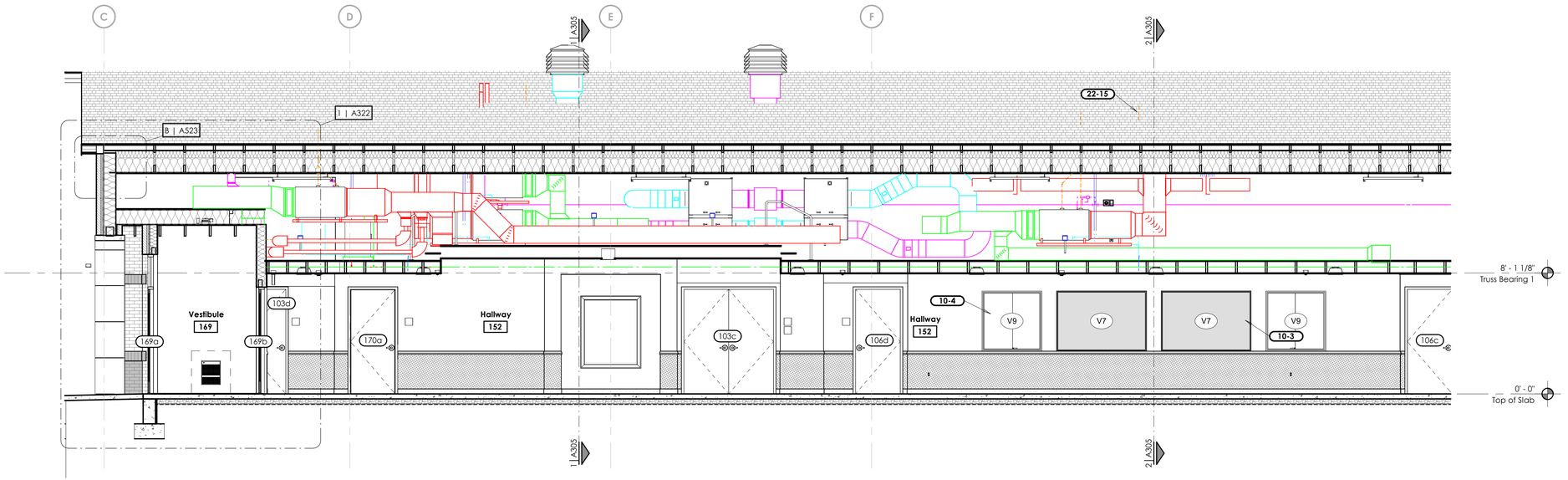

1 Building Section

Scale: 1/4" = 1'-0"

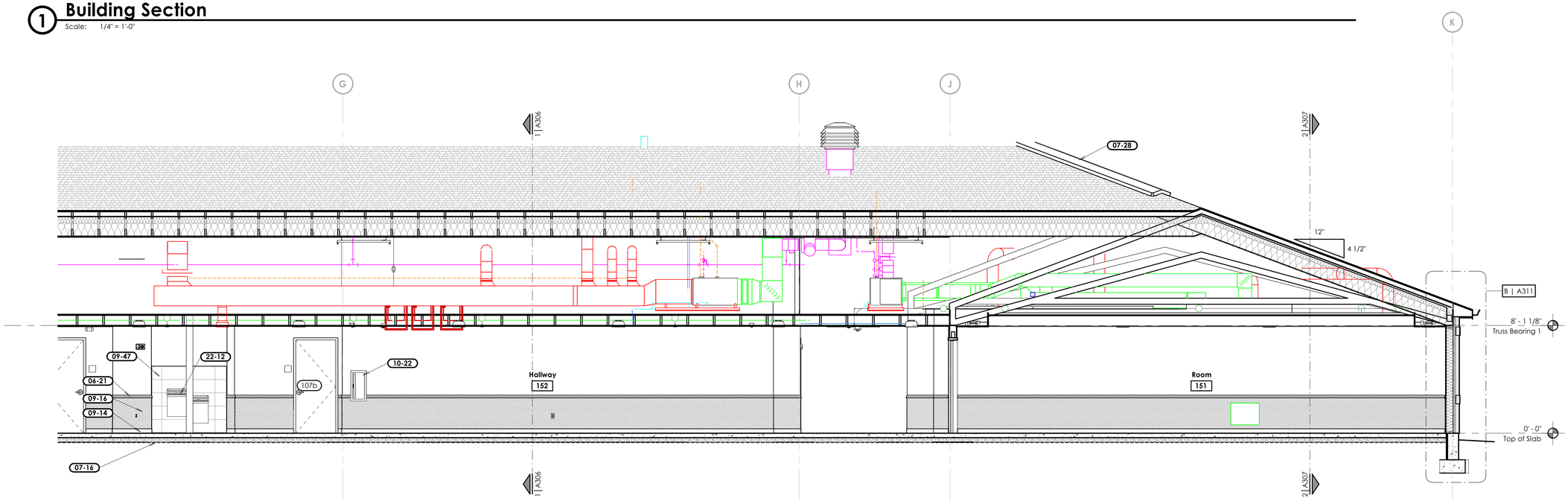

2 Building Section

Scale: 1/4" = 1'-0"

bhd ARCHITECTS
www.bhdarchitects.com
Phone 801.571.0010
Fax 801.571.0303
Toll Free 888.571.0010
65 East Wadsworth Park Drive
Suite 205 Draper, Utah 84020

LICENSED ARCHITECT
Lafe Theodore Harris
29 May 2025
6928898-0301
STATE OF UTAH

THE CHURCH OF
JESUS CHRIST
OF LATTER-DAY SAINTS

Nibley 6 &
Nibley UT West Stake

Approx. 3410 South 1200 West, Nibley, Utah
41.670809, -111.860775

Date:	BHD #:	County Parcel:	Plan Series:	Owner #:
29 May 2025	2403	03050000016	Heritage 24	514-4728

Drawing Issue and Revision Schedule

#	Date	Description

Building Sections

A303

5/29/2025 9:32:40 AM

Keyed Notes

06-21 Hardwood chair rail. See E/A702. At windows, see F/A702.
07-28 Prefinished metal ridge vent. See A/A522.
09-14 Carpet base. See finish schedule and specifications.
09-16 Sisal wall covering.
10-1 Not used.
10-3 Lock, typical.

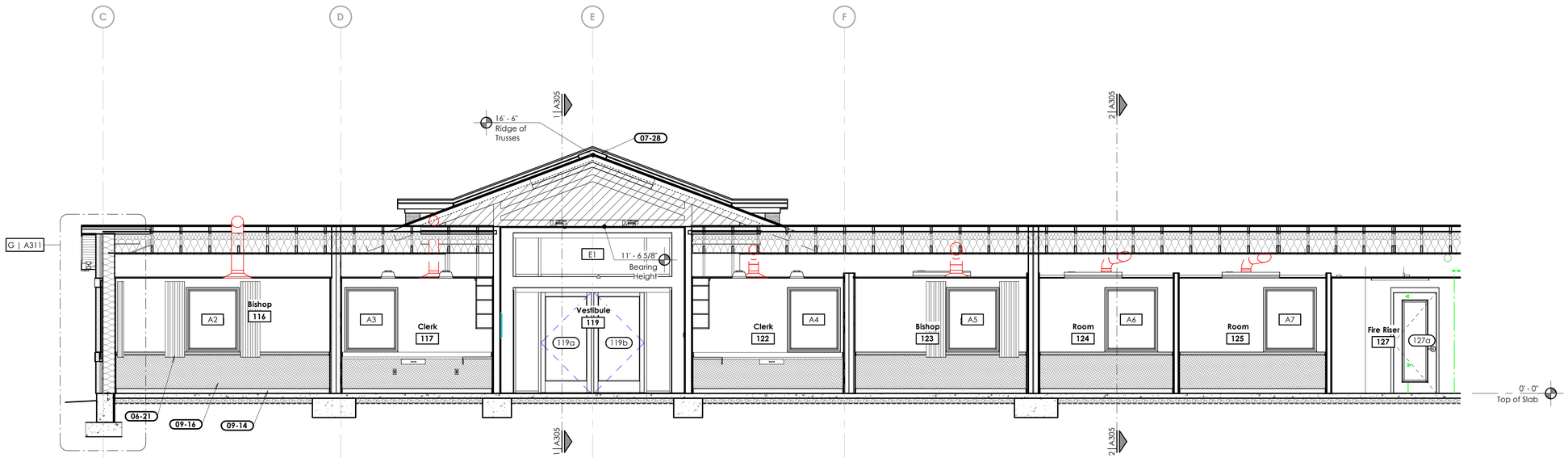

1 Building Section

Scale: 1/4" = 1'-0"

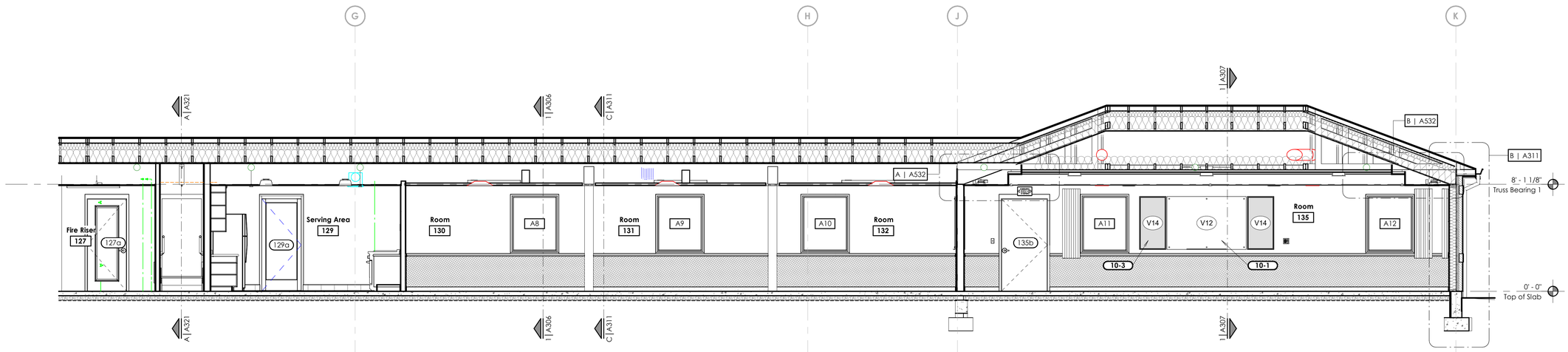

2 Building Section

Scale: 1/4" = 1'-0"

bhd ARCHITECTS
www.bhdarchitects.com
Phone 801.571.0010
Fax 801.571.0303
Toll Free 888.571.0010
65 East Wadsworth Park Drive
Suite 205 Draper, Utah 84020

LICENSED ARCHITECT
Late Theodore Harris
Date 29 May 2025
6978-0301
STATE OF UTAH

THE CHURCH OF
JESUS CHRIST
OF LATTER-DAY SAINTS

Nibley 6 &
Nibley UT West Stake

Approx. 3410 South 1200 West, Nibley, Utah
41.670809, -111.860775

Date: 29 May 2025
BHD #: 2403
County Parcel: 03:050:0016
Plan Series: Heritage 24
Owner #: 514-4728

Drawing Issue and Revision Schedule

#	Date	Description

Building Sections

A304

5/29/2025 9:32:43 AM

Keyed Notes

06-3	Attic access catwalk above. See A/A552. Center catwalk in truss at the high point of the truss.
07-16	Below-grade vapor retarder system.
07-28	Prefinished metal ridge vent. See A/A522.
09-36	Painted wood trim at the ceiling in the chapel and cultural center. See H/A702.
11-6	Basketball backboard and support frame. See E/A531.

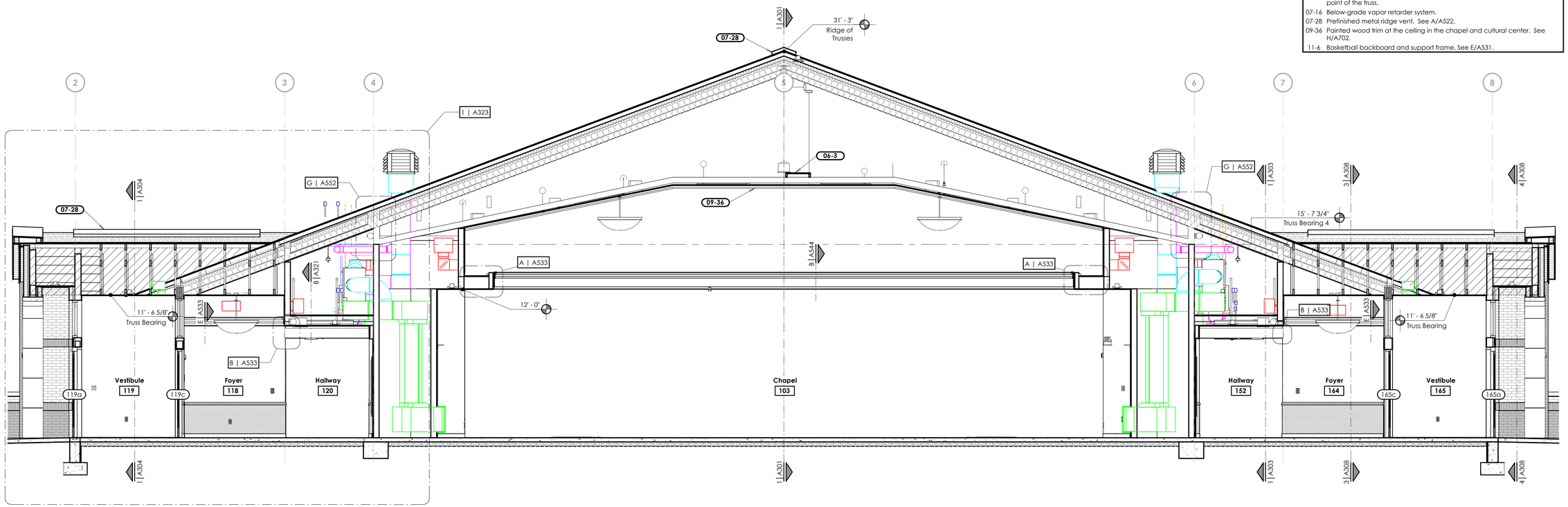

1 Building Section

Scale: 1/4" = 1'-0"

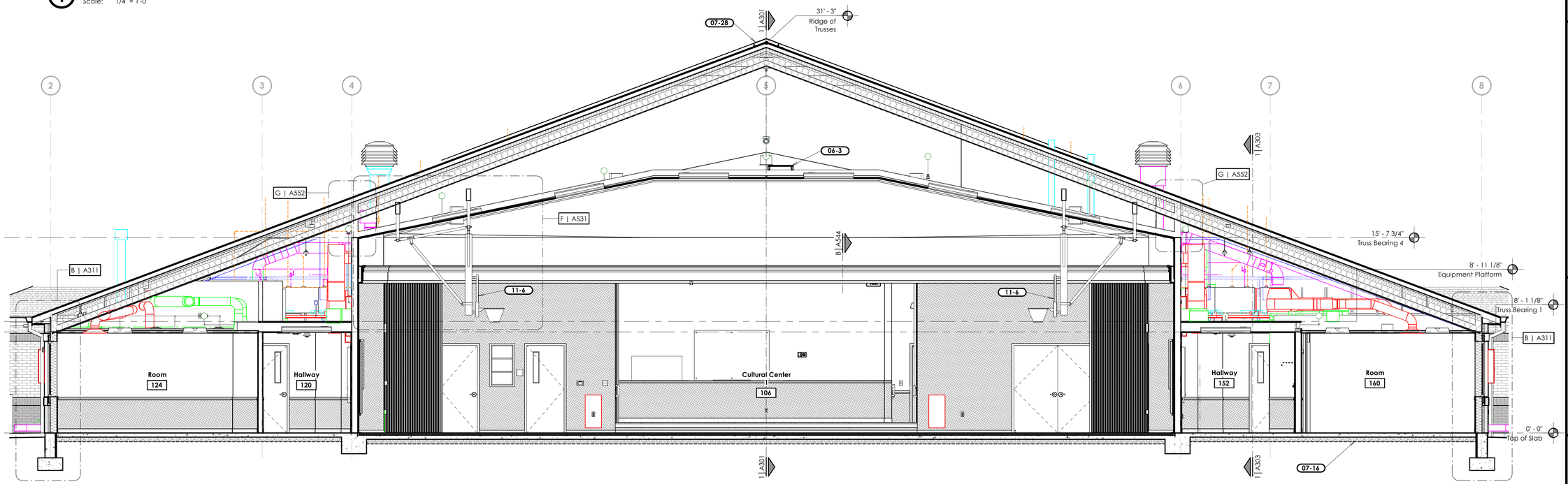

2 Building Section

Scale: 1/4" = 1'-0"

5/29/2025 9:32:49 AM

bhd ARCHITECTS
www.bhdarchitects.com
Phone 801.571.0010
Fax 801.571.0303
Toll Free 888.571.0010
65 East Wadsworth Park Drive
Suite 205 Draper, Utah 84020

LICENSED ARCHITECT Late Theodore Harris 23 MAY 2025 6278-0301 STATE OF UTAH

THE CHURCH OF JESUS CHRIST OF LATTER-DAY SAINTS

Nibley 6 & Nibley UT West Stake

Approx. 3410 South 1200 West, Nibley, Utah
41.670809, -111.860775

BHD #: 2403
County Parcel: 03.050.0016
Plan Series: Heritage 24
Owner #: 514-4728
Date: 29 May 2025

Drawing Issue and Revision Schedule

#	Date	Description

Building Sections

A305

Keyed Notes

06-3	Attic access catwalk above. See A/A552. Center catwalk in truss at the high point of the truss.
07-16	Below-grade vapor retarder system.
07-28	Prefinished metal ridge vent. See A/A522.

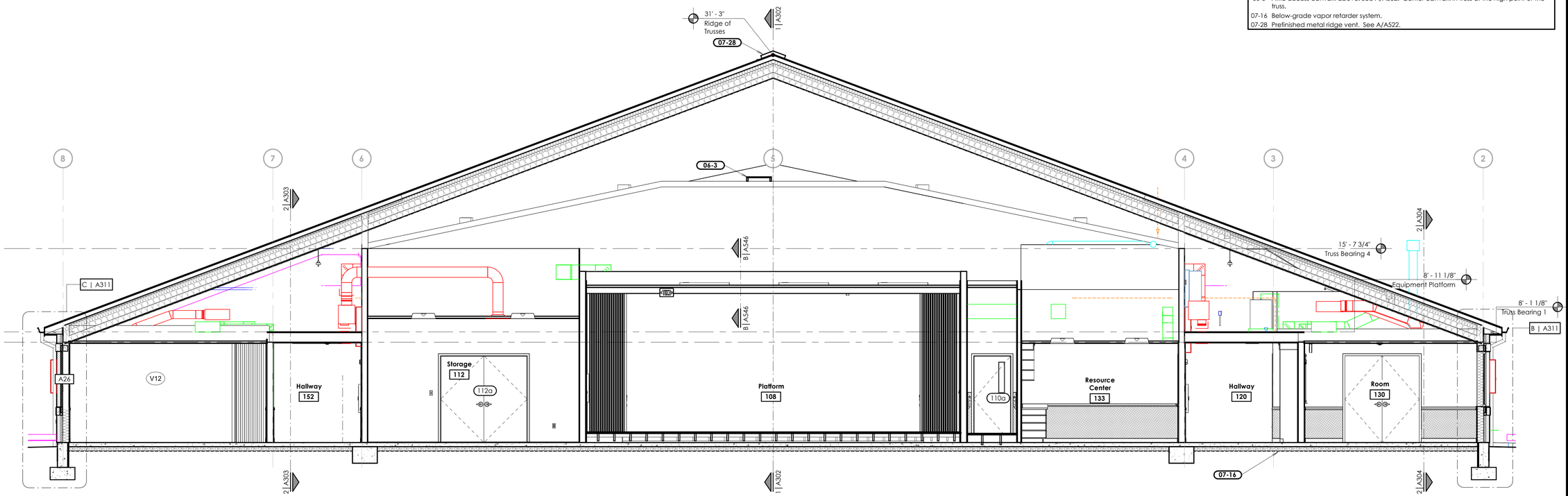

1 Building Section

Scale: 1/4" = 1'-0"

bhd ARCHITECTS
www.bhdarchitects.com
Phone 801.571.0010
Fax 801.571.0303
Toll Free 888.571.0010
65 East Wadsworth Park Drive
Suite 205 Draper, Utah 84020

LICENSED ARCHITECT
Lafe Theodore Harris
6928-0301
29 May 2025
STATE OF UTAH

THE CHURCH OF
JESUS CHRIST
OF LATTER-DAY SAINTS

Nibley 6 &
Nibley UT West Stake

Approx. 3410 South 1200 West, Nibley, Utah
41.670809, -111.860775

Date:	BHD #:	County Parcel:	Plan Series:	Owner #:
29 May 2025	2403	03050000016	Heritage 24	514-4728

Drawing Issue and Revision Schedule

#	Date	Description

Building Sections

A306

5/29/2025 9:32:52 AM

Keyed Notes

08-8	Vinyl framed window. See window elevations on A602.
09-5	Thinset ceramic wall tile system. Install bullnose tile at all exposed tile edges. Refer to Finish Legend & Interior Elevations.

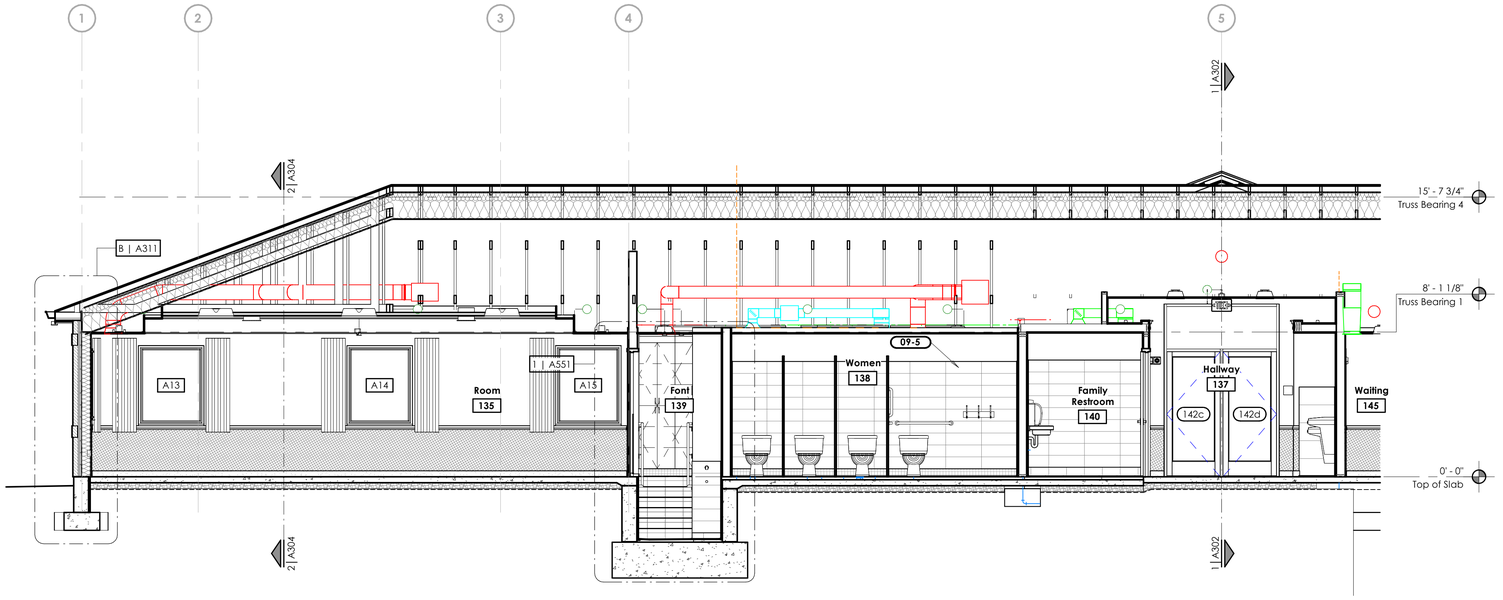

1 Building Section

Scale: 1/4" = 1'-0"

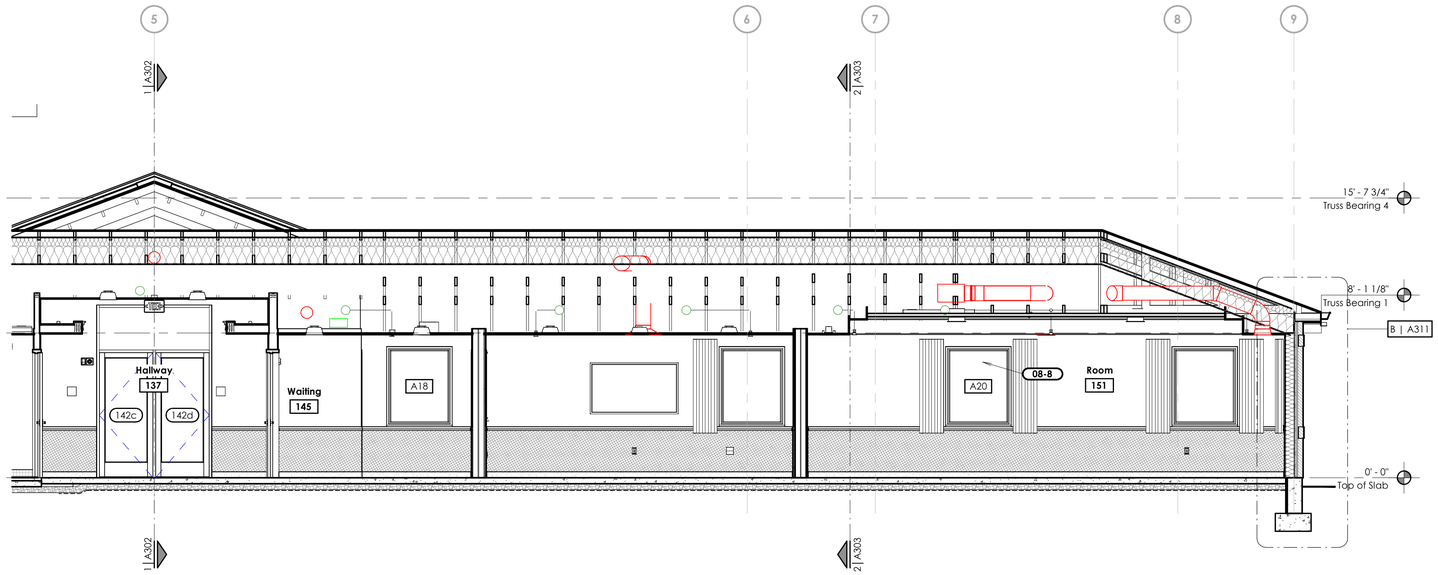

2 Building Section

Scale: 1/4" = 1'-0"

bhd ARCHITECTS
www.bhdarchitects.com
Phone 801.571.0010
Fax 801.571.0303
Toll Free 888.571.0010
65 East Wadsworth Park Drive
Suite 205 Draper, Utah 84020

LICENSED ARCHITECT
Late Theodore Harris
29 May 2025
6928898-0301
STATE OF UTAH

THE CHURCH OF
JESUS CHRIST
OF LATTER-DAY SAINTS

Nibley 6 &
Nibley UT West Stake

Approx. 3410 South 1200 West, Nibley, Utah
41.670809, -111.860775

Date: 22 Nov 2022	**BHD #:** 2142	**County Parcel:** 48:498:0306	**Plan Series:** Her 17 SC Custom
			Owner #: 501-4025

Drawing Issue and Revision Schedule

#	Date	Description

Building Sections

A307

5/29/2025 9:32:54 AM

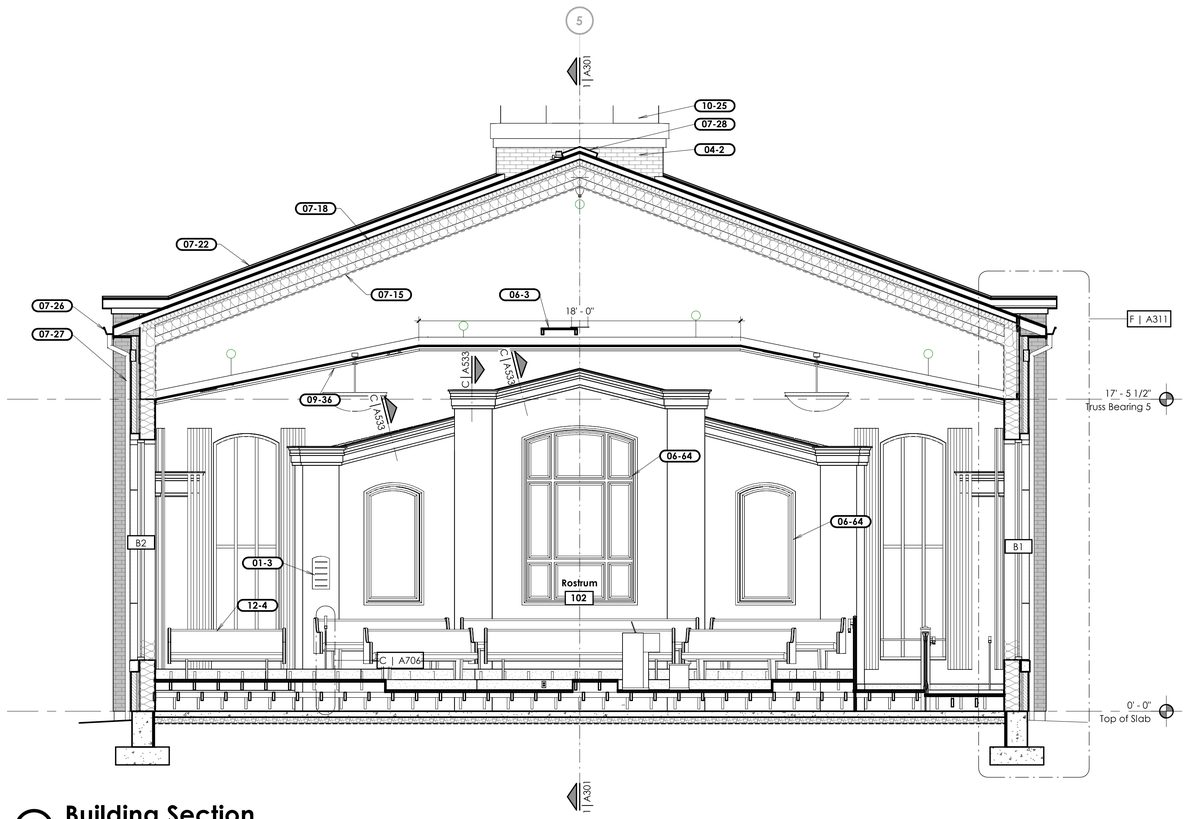

1 Building Section

Scale: 1/4" = 1'-0"

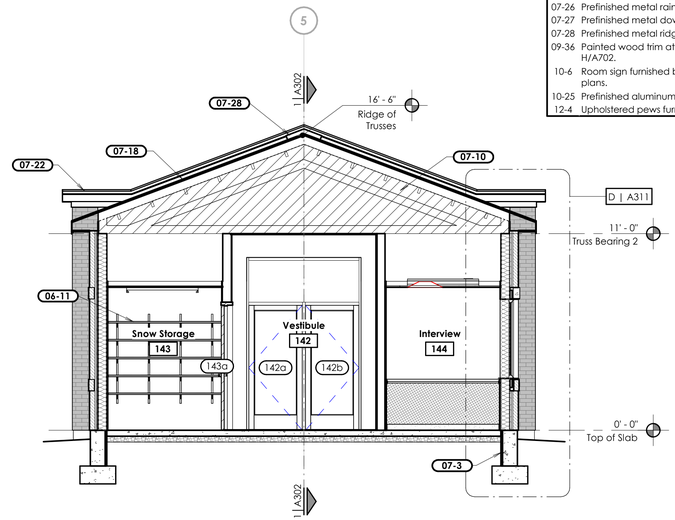

2 Building Section

Scale: 1/4" = 1'-0"

Keyed Notes

01-3	Hymn number board furnished and installed by owner.
03-3	Reinforced concrete footing and foundation. See structural sheets.
04-1	Brick veneer accent course. Brick Type #2.
04-2	Brick veneer field course. Brick Type #1.
04-3	Brick veneer soldier course. Brick Type #2. Install +1/2" from the face of the field brick.
06-3	Attic access catwalk above. See A/A552. Center catwalk in truss at the high point of the truss.
06-11	Wall-mounted open adjustable shelving. See D/A702.
06-21	Hardwood chair rail. See E/A702. At windows, see F/A702.
06-25	Fire blocking at 10 feet on center maximum.
06-64	Rostrum wall. See A401 and A402.
07-3	3" rigid insulation.
07-6	Baffles and roof insulation. See F/A522.
07-10	Insulate and completely fill space above ceiling for freeze and fire protection.
07-15	Vapor retarder membrane. Seal air tight. See F/A522.
07-16	Below-grade vapor retarder system.
07-18	Asphalt shingle roofing over underlayments. Install secondary underlayment over the entire roof and down the front of the fascia.
07-22	Parapet cap flashing assembly.
07-26	Prefinished metal rain gutter. See H/A522.
07-27	Prefinished metal downspout. Typical. See G/A522.
07-28	Prefinished metal ridge vent. See A/A522.
09-36	Painted wood trim at the ceiling in the chapel and cultural center. See H/A702.
10-6	Room sign furnished by owner and installed by contractor. See signage plans.
10-25	Prefinished aluminum steeple. See A221.
12-4	Upholstered pews furnished and installed by owner.

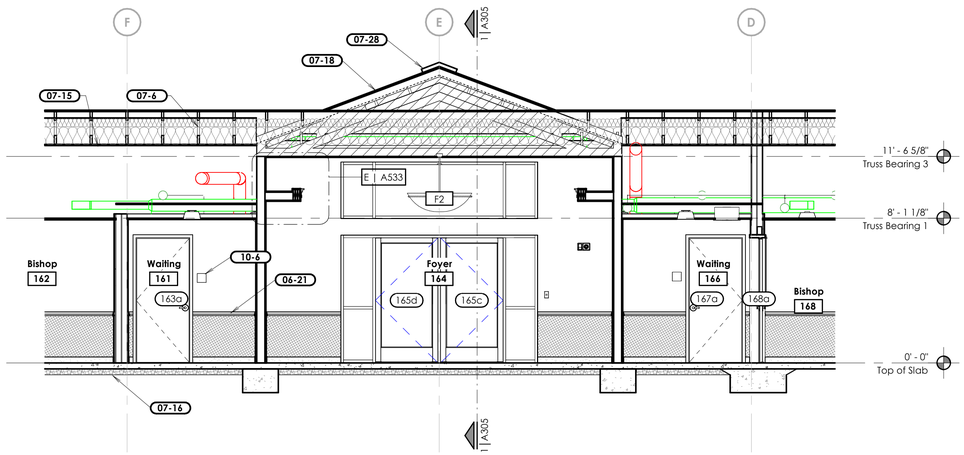

3 Building Section

Scale: 1/4" = 1'-0"

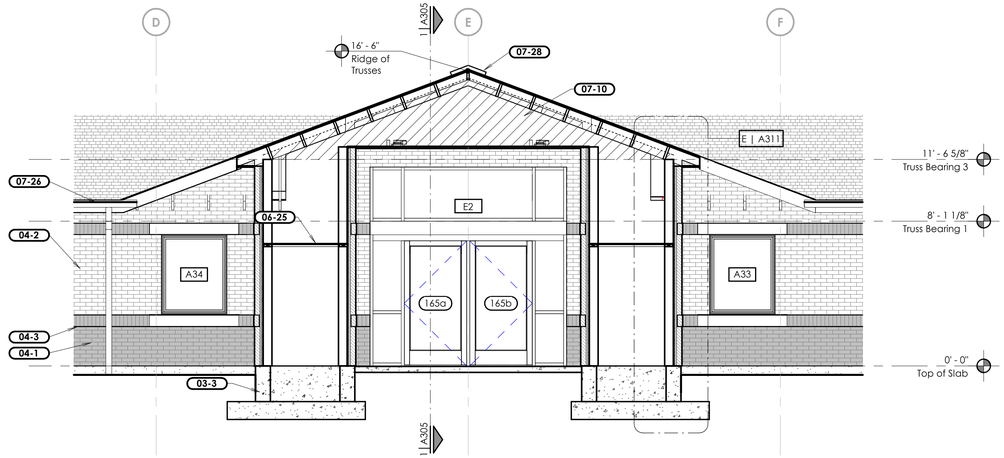

4 Building Section

Scale: 1/4" = 1'-0"

bhd ARCHITECTS
www.bhdarchitects.com
Phone 801.571.0010
Fax 801.571.0303
Toll Free 888.571.0010
65 East Wadsworth Park Drive
Suite 205 Draper, Utah 84020

LICENSED ARCHITECT Lafe Theodore Harris 6278-0301 STATE OF UTAH 23 MAY 2025

THE CHURCH OF JESUS CHRIST OF LATTER-DAY SAINTS

Nibley 6 & Nibley UT West Stake

Approx. 3410 South 1200 West, Nibley, Utah
41.672809, -111.860775

BHD #: 2403
County Parcel: 03:050:0016
Plan Series: Heritage 24
Owner #: 514-4728
Date: 29 May 2025

Drawing Issue and Revision Schedule

#	Date	Description

Building Sections

A308

5/29/2025 9:32:58 AM

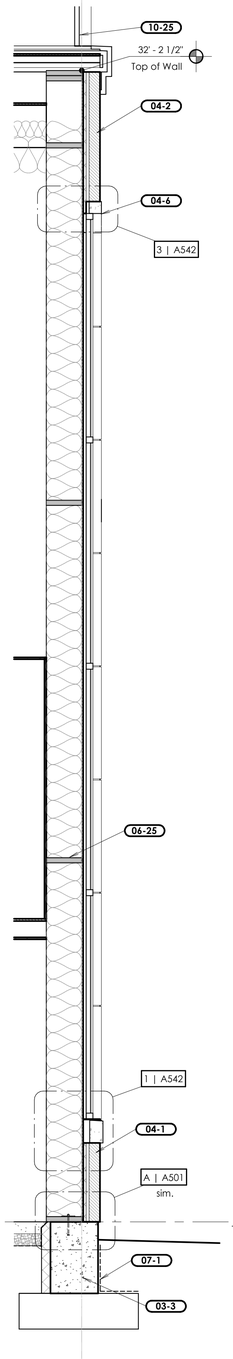

A Wall Section

Scale: 1/2" = 1'-0"

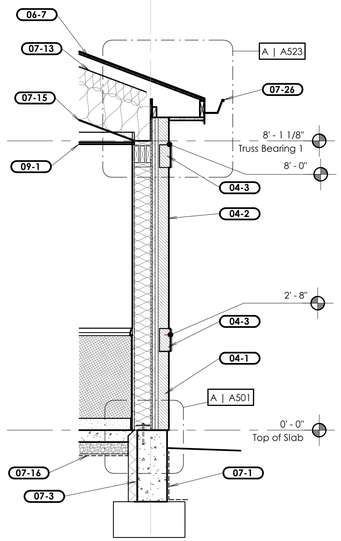

B Wall Section

Scale: 1/2" = 1'-0"

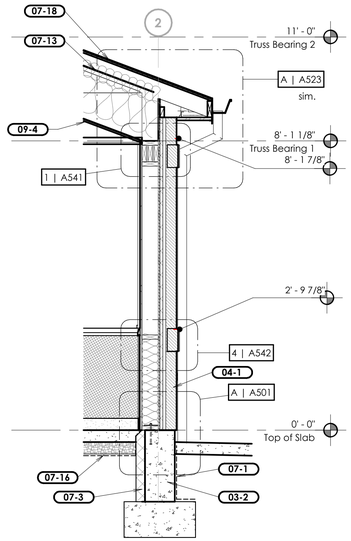

C Wall Section

Scale: 1/2" = 1'-0"

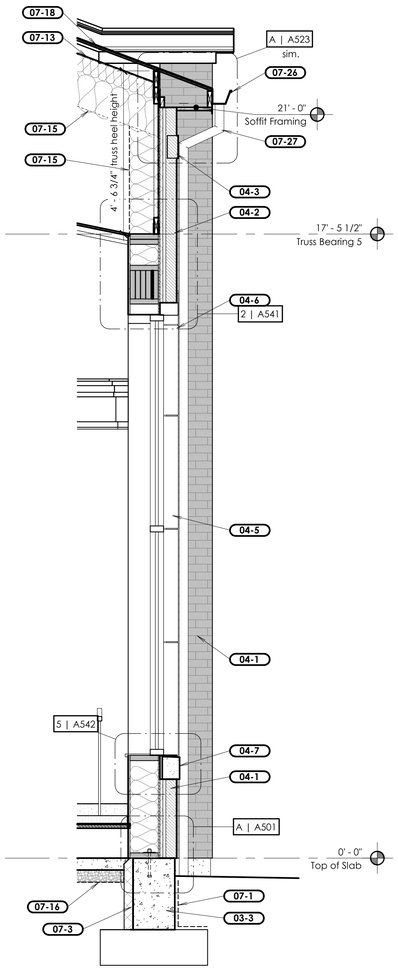

F Wall Section

Scale: 1/2" = 1'-0"

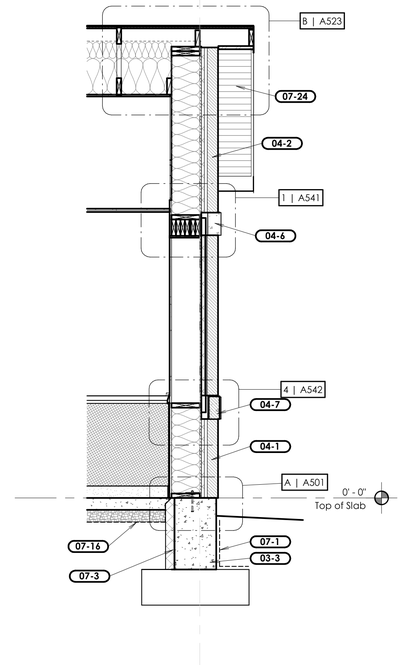

G Wall Section

Scale: 1/2" = 1'-0"

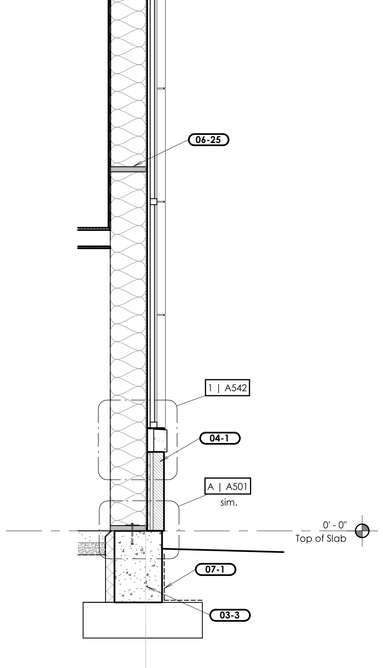

D Wall Section

Scale: 1/2" = 1'-0"

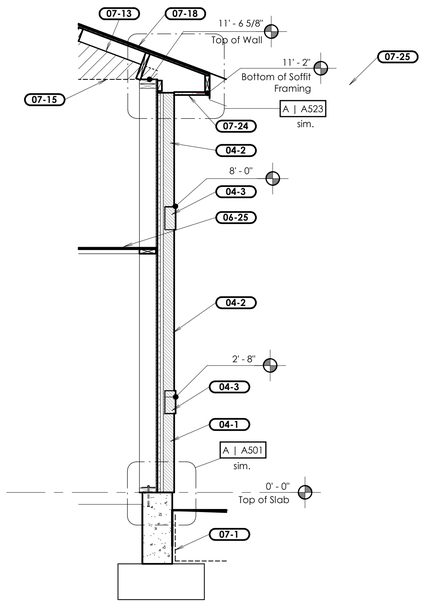

E Wall Section

Scale: 1/2" = 1'-0"

Keyed Notes

03-2	Concrete floor slab. See structural sheets.
03-3	Reinforced concrete footing and foundation. See structural sheets.
04-1	Brick veneer accent course. Brick Type #2.
04-2	Brick veneer field course. Brick Type #1.
04-3	Brick veneer soldier course. Brick Type #2. Install +1/2" from the face of the field brick.
04-5	Precast concrete entry or window trim.
04-6	Precast concrete window header.
04-7	Precast concrete window sill.
06-7	Floor sheathing. See structural drawings.
06-25	Fire blocking at 10 feet on center maximum.
07-1	Bituminous dampproofing from 2" below grade down to the bottom of the foundation wall and across the top of the footing.
07-3	3" rigid insulation.
07-13	Corrugated plastic baffle with 4" ventilation space above.
07-15	Vapor retarder membrane. Seal air tight. See F/A522.
07-16	Below-grade vapor retarder system.
07-18	Asphalt shingle roofing over underlayments. Install secondary underlayment over the entire roof and down the front of the fascia.
07-24	Metal soffit panels.
07-25	Prefinished metal fascia.
07-26	Prefinished metal rain gutter. See H/A522.
07-27	Prefinished metal downspout. Typical. See G/A522.
07-46	Fill attic area with insulation as shown.
09-1	Suspended ceiling system. See reflected ceiling plan.
09-4	5/8" gypsum board ceiling attached to truss. Typical at all lower trusses.
10-25	Prefinished aluminum steeple. See A221.

bhd ARCHITECTS
www.bhdarchitects.com
Phone 801.571.0010
Fax 801.571.0303
Toll Free 888.571.0010
65 East Wadsworth Park Drive
Suite 205 Draper, Utah 84020

LICENSED ARCHITECT
Lafe Theodore Harris
6278378-0301
23 MAY 2025
STATE OF UTAH

THE CHURCH OF JESUS CHRIST OF LATTER-DAY SAINTS

Nibley 6 & Nibley UT West Stake

Approx. 3410 South 1200 West, Nibley, Utah
41.670809, -111.860775

BHD #: 2403
County Parcel: 03:050:0016
Plan Series: Heritage 24
Owner #: 514-4728
Date: 29 May 2025

Drawing Issue and Revision Schedule

#	Date	Description

Wall Sections

A311

5/29/2025 10:05:19 AM

Keyed Notes

03-3	Reinforced concrete footing and foundation. See structural sheets.
04-1	Brick veneer accent course. Brick Type #2.
04-2	Brick veneer field course. Brick Type #1.
04-3	Brick veneer soldier course. Brick Type #2. Install +1/2" from the face of the field brick.
04-5	Precast concrete entry or window trim.
04-7	Precast concrete window sill.
06-25	Fire blocking at 10 feet on center maximum.
07-1	Bituminous dampproofing from 2" below grade down to the bottom of the foundation wall and across the top of the footing.
07-2	Plastic sheet air barrier.
07-3	3" rigid insulation.
07-13	Corrugated plastic baffle with 4" ventilation space above.
07-15	Vapor retarder membrane. Seal air tight. See F/A522.
07-16	Below-grade vapor retarder system.
07-18	Asphalt shingle roofing over underlayments. Install secondary underlayment over the entire roof and down the front of the fascia.
07-24	Metal soffit panels.
08-12	Spandrel glass window. See window details.
09-4	5/8" gypsum board ceiling attached to truss. Typical at all lower trusses.

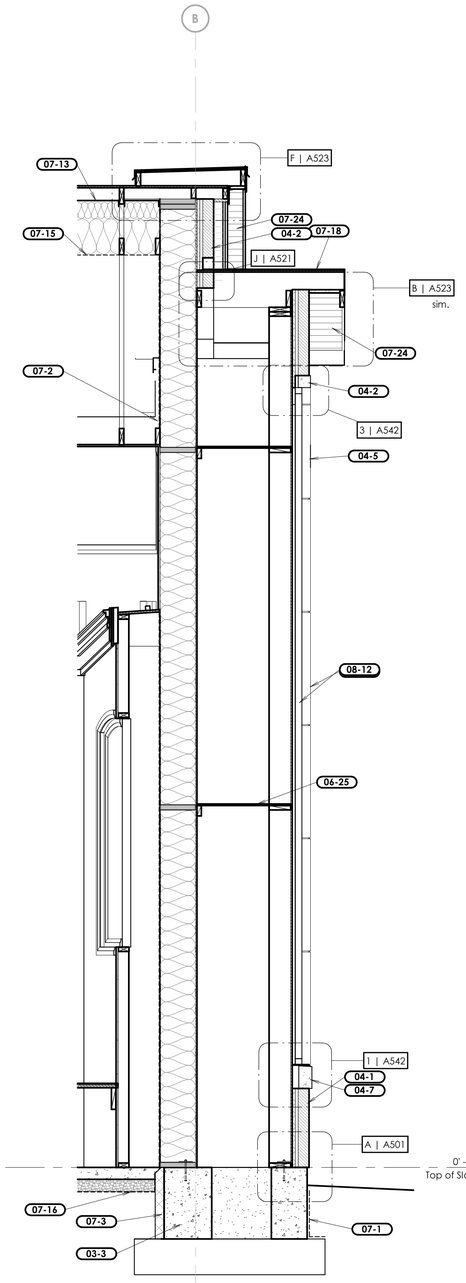

A Wall Section

Scale: 1/2" = 1'-0"

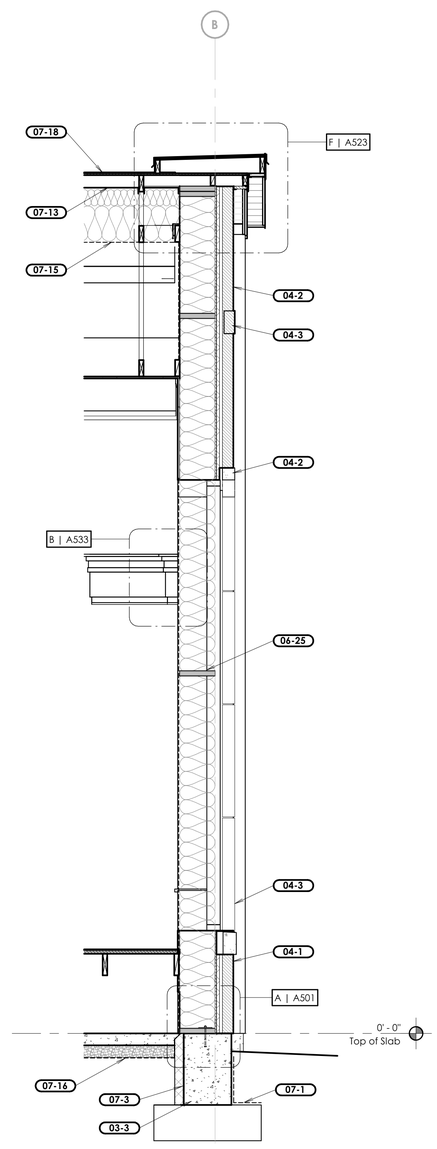

B Wall Section

Scale: 1/2" = 1'-0"

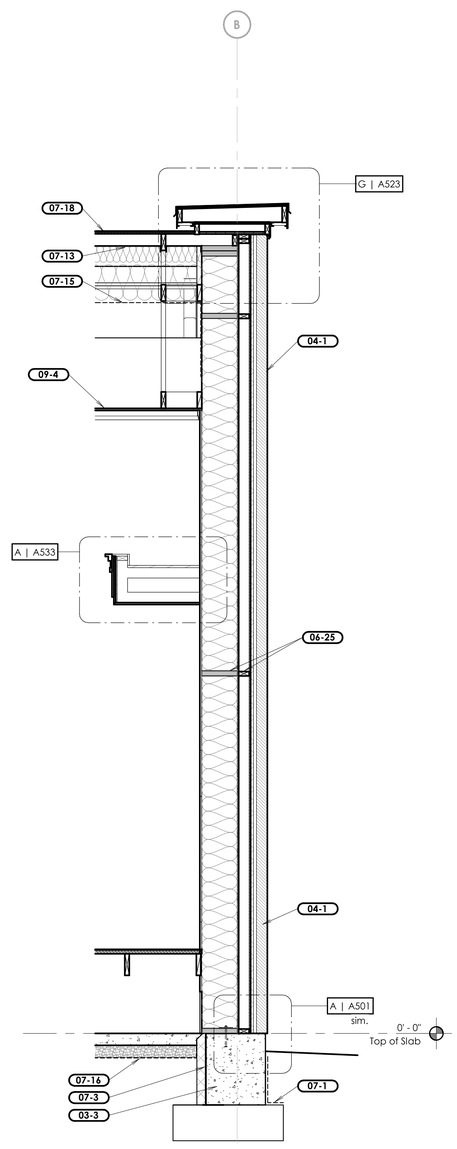

C Wall Section

Scale: 1/2" = 1'-0"

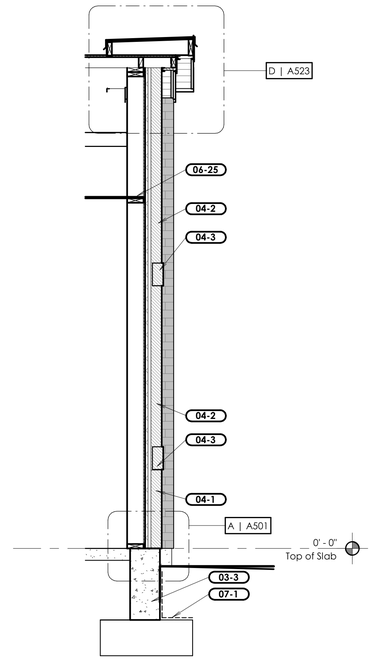

D Wall Section

Scale: 1/2" = 1'-0"

E Wall Section

Scale: 1/2" = 1'-0"

bhd ARCHITECTS
www.bhdarchitects.com
Phone 801.571.0010
Fax 801.571.0303
Toll Free 888.571.0010
65 East Wadsworth Park Drive
Suite 205 Draper, Utah 84020

LICENSED ARCHITECT
Lafe Theodore Harris
6278578-0301
STATE OF UTAH
29 MAY 2025

THE CHURCH OF JESUS CHRIST OF LATTER-DAY SAINTS

Nibley 6 &
Nibley UT West Stake

Approx. 3410 South 1200 West, Nibley, Utah
41.670809, -111.860775

Date: 29 May 2025
BHD #: 2403
County Parcel: 03050C0016
Plan Series: Heritage 24
Owner #: 514-4728

Drawing Issue and Revision Schedule

#	Date	Description

Wall Sections

A312

5/29/2025 9:55:46 AM

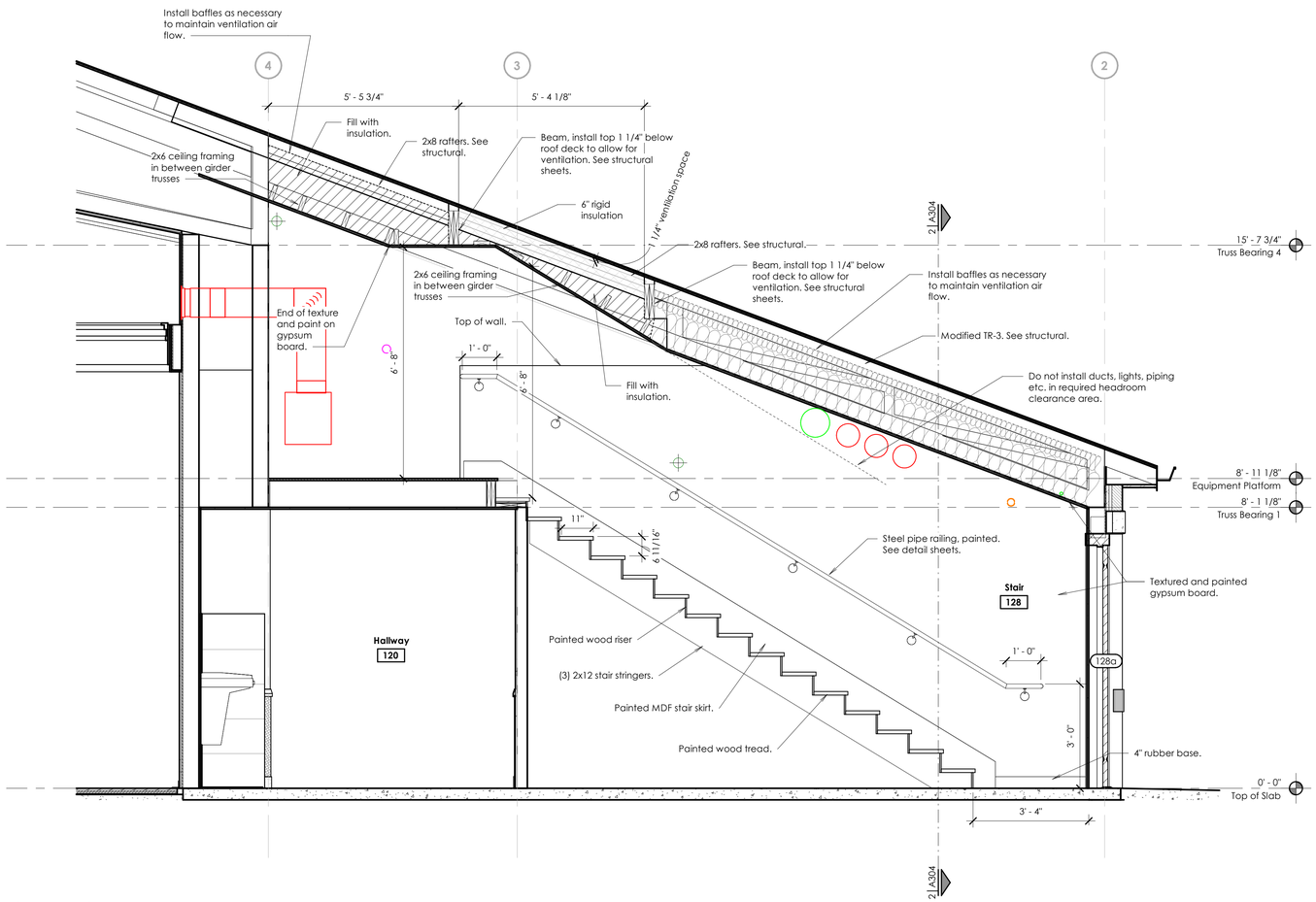

A Stair Section

Scale: 1/2" = 1'-0"

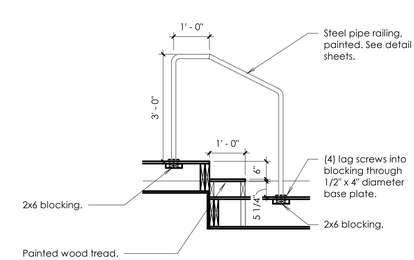

B Equipment Platform Handrail

Scale: 1/2" = 1'-0"

bhd ARCHITECTS
www.bhdarchitects.com
Phone 801.571.0010
Fax 801.571.0303
Toll Free 888.571.0010
65 East Wadsworth Park Drive
Suite 205 Draper, Utah 84020

LICENSED ARCHITECT
Lafe Theodore Harris
29 May 2025
6928-0301
STATE OF UTAH

THE CHURCH OF
JESUS CHRIST
OF LATTER-DAY SAINTS

Nibley 6 &
Nibley UT West Stake

Approx. 3410 South 1200 West, Nibley, Utah
41.670809, -111.860775

Date:	BHD #:	County Parcel:	Plan Series:	Owner #:
29 May 2025	2403	03:050:0016	Heritage 24	514-4728

Drawing Issue and Revision Schedule

#	Date	Description

Stair Sections

A321

5/29/2025 9:33:03 AM

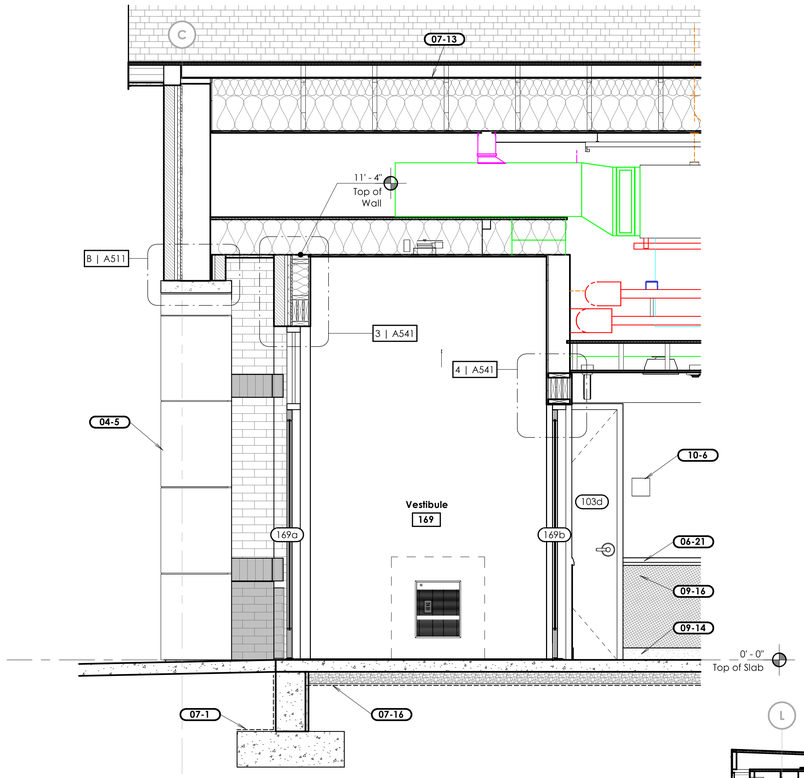

1 Enlarged Entry Section

Scale: 1/2" = 1'-0"

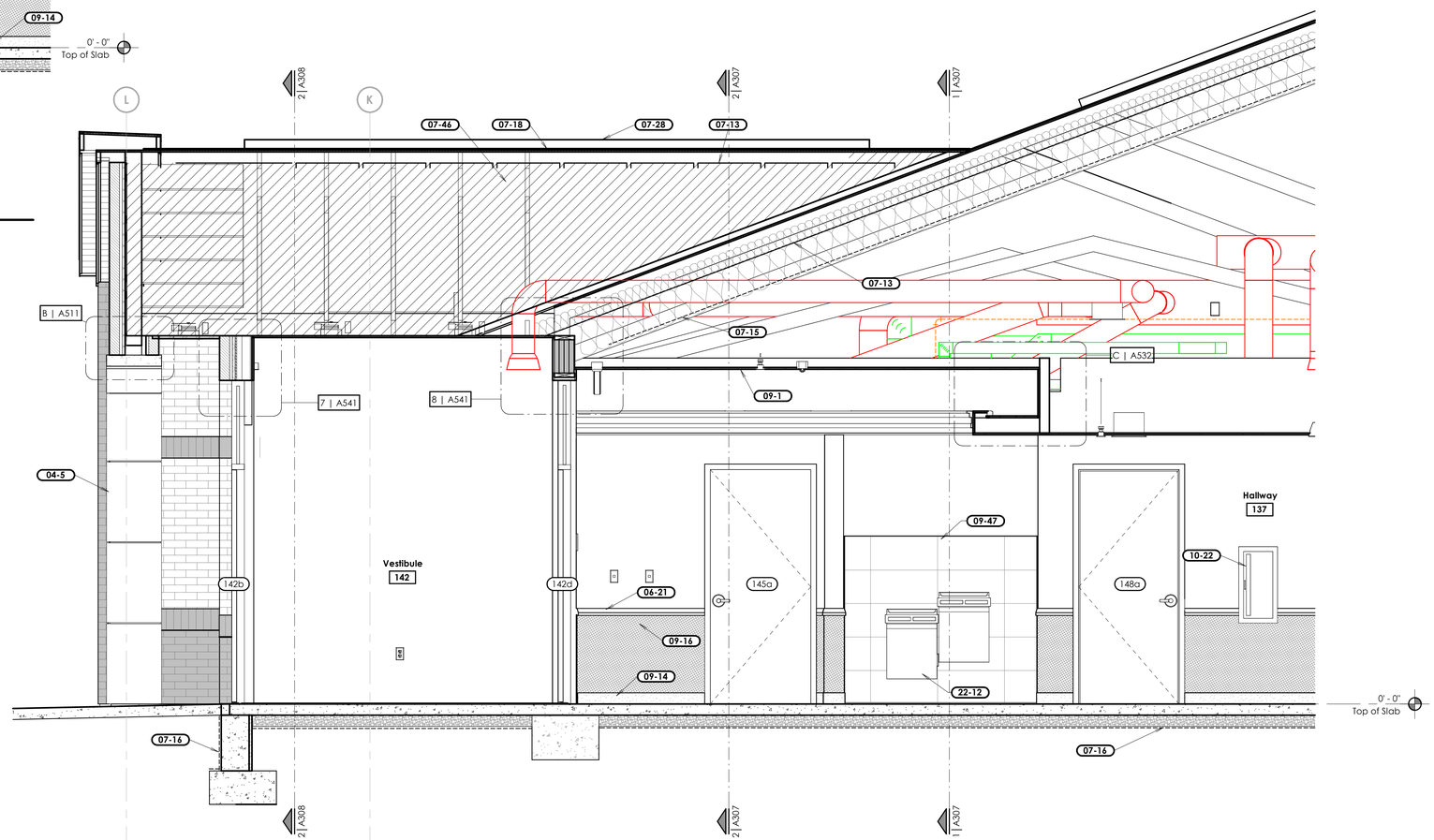

2 Enlarged Entry Section

Scale: 1/2" = 1'-0"

Keyed Notes

04-5	Precast concrete entry or window trim.
06-21	Hardwood chair rail. See E/A702. At windows, see F/A702.
07-1	Bituminous dampproofing from 2" below grade down to the bottom of the foundation wall and across the top of the footing.
07-13	Corrugated plastic baffle with 4" ventilation space above.
07-15	Vapor retarder membrane. Seal air tight. See F/A522.
07-16	Below-grade vapor retarder system.
07-18	Asphalt shingle roofing over underlayments. Install secondary underlayment over the entire roof and down the front of the fascia.
07-28	Prefinished metal ridge vent. See A/A522.
07-46	Fill attic area with insulation as shown.
09-1	Suspended ceiling system. See reflected ceiling plan.
09-14	Carpet base. See finish schedule and specifications.
09-16	Sisal wall covering.
09-47	12" x 24" porcelain tile.
10-6	Room sign furnished by owner and installed by contractor, See signage plans.
10-22	Semi-recessed fire extinguisher cabinet. See E/A554 and code plans.
22-12	Electric water cooler. Provide solid blocking in wall as required by manufacturer. See plumbing sheets.

bhd ARCHITECTS
www.bhdarchitects.com
Phone 801.571.0010
Fax 801.571.0303
Toll Free 888.571.0010
65 East Wadsworth Park Drive
Suite 205 Draper, Utah 84020

LICENSED ARCHITECT
Lafe Theodore Harris
6928898-0301
29 May 2025
STATE OF UTAH

THE CHURCH OF
JESUS CHRIST
OF LATTER-DAY SAINTS

Nibley 6 &
Nibley UT West Stake

Approx. 3410 South 1200 West, Nibley, Utah
41.670809, -111.860775

Date: 29 May 2025	BHD #: 2403	County Parcel: 03:050:0016	Plan Series: Heritage 24	Owner #: 514-4728

Drawing Issue and Revision Schedule

#	Date	Description

Enlarged Section

A322

5/29/2025 9:33:05 AM

Keyed Notes

04-5	Precast concrete entry or window trim.
06-21	Hardwood chair rail. See E/A702. At windows, see F/A702.
07-1	Bituminous dampproofing from 2" below grade down to the bottom of the foundation wall and across the top of the footing.
07-13	Corrugated plastic baffle with 4" ventilation space above.
07-16	Below-grade vapor retarder system.
07-18	Asphalt shingle roofing over underlayments. Install secondary underlayment over the entire roof and down the front of the fascia.
07-24	Metal soffit panels.
07-28	Prefinished metal ridge vent. See A/A522.
07-46	Fill attic area with insulation as shown.
09-4	5/8" gypsum board ceiling attached to truss. Typical at all lower trusses.
09-14	Carpet base. See finish schedule and specifications.
09-16	Sisal wall covering.

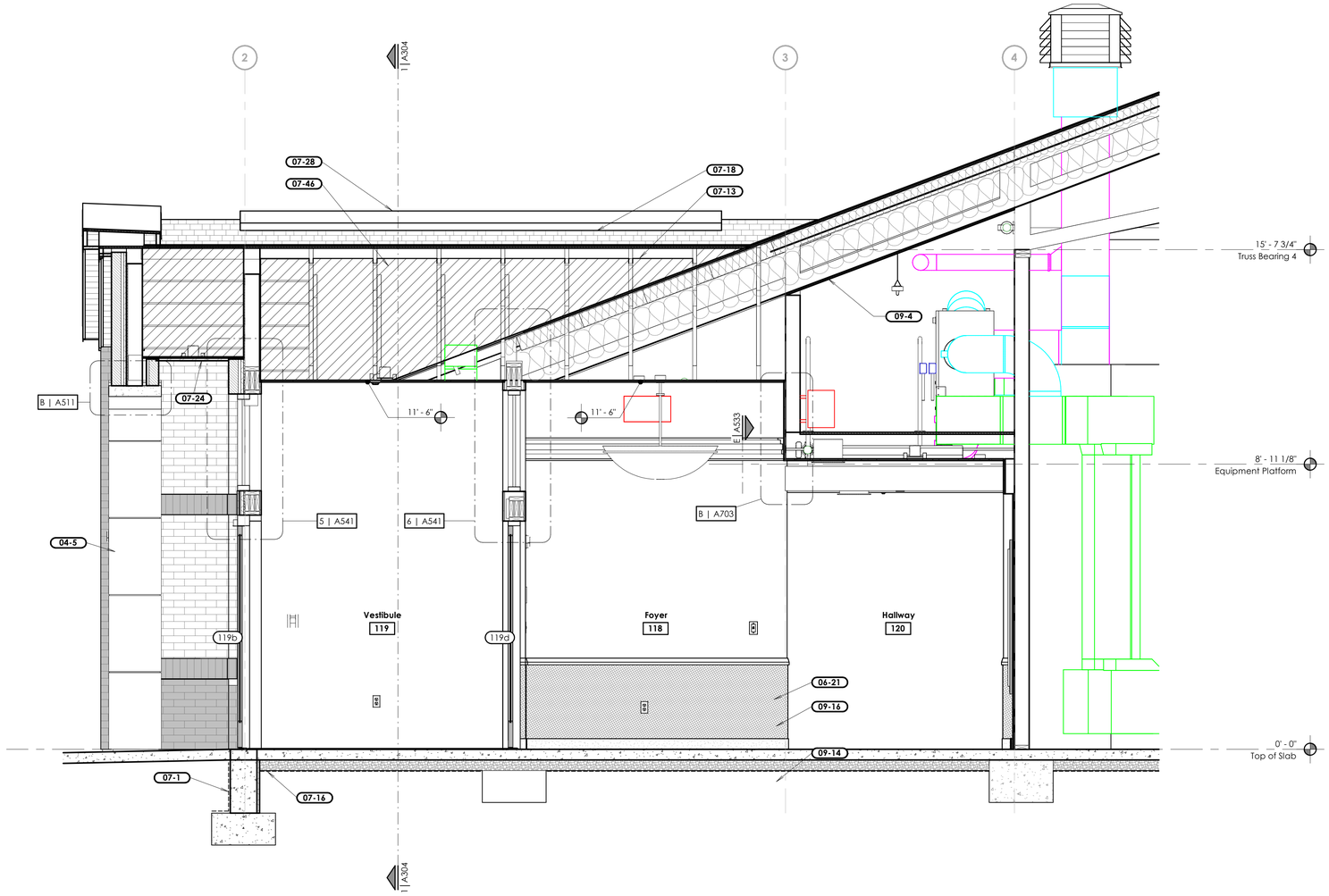

1 Enlarged Section

Scale: 1/2" = 1'-0"

5/29/2025 9:33:06 AM

bhd ARCHITECTS
www.bhdarchitects.com
Phone 801.571.0010
Fax 801.571.0303
Toll Free 888.571.0010
65 East Wadsworth Park Drive
Suite 205 Draper, Utah 84020

LICENSED ARCHITECT
Lafe Theodore Harris
Date 29 May 2025
6978898-0301
STATE OF UTAH

THE CHURCH OF
JESUS CHRIST
OF LATTER-DAY SAINTS

Nibley 6 &
Nibley UT West Stake

Approx. 3410 South 1200 West, Nibley, Utah
41.670809, -111.860775

Date: 29 May 2025
BHD #: 2403
County Parcel: 03:050:0016
Plan Series: Heritage 24
Owner #: 514-4728

Drawing Issue and Revision Schedule

#	Date	Description

Enlarged Section

A323

Keyed Notes

06-71	3/4" floor sheathing, painted black.
09-32	Organ chamber grille cloth over gypsum board. Paint gypsum board behind grille cloth black. Attach grille cloth to perimeter wood trim so fabric is tight, straight, and without bubbles or sags.
09-33	Organ chamber grille cloth over expanded metal reinforcing. Paint expanded metal reinforcing black prior to installation. Attach grille cloth to perimeter wood trim so fabric is tight, straight, and without bubbles or sags.
09-34	5/8" Type X gypsum board, painted black (all surfaces in the organ speaker chamber).
26-13	Rostrum upper accent lighting. Place fixtures continuous with minimum possible spacing between fixtures and edges of rostrum features. Install all fixtures the same distance away from the upper wall. Install as far from the wall as possible.
26-14	Vertical cove light fixture. See electrical sheets.
26-15	Light switch to dim vertical cove lights on both sides of rostrum wall.

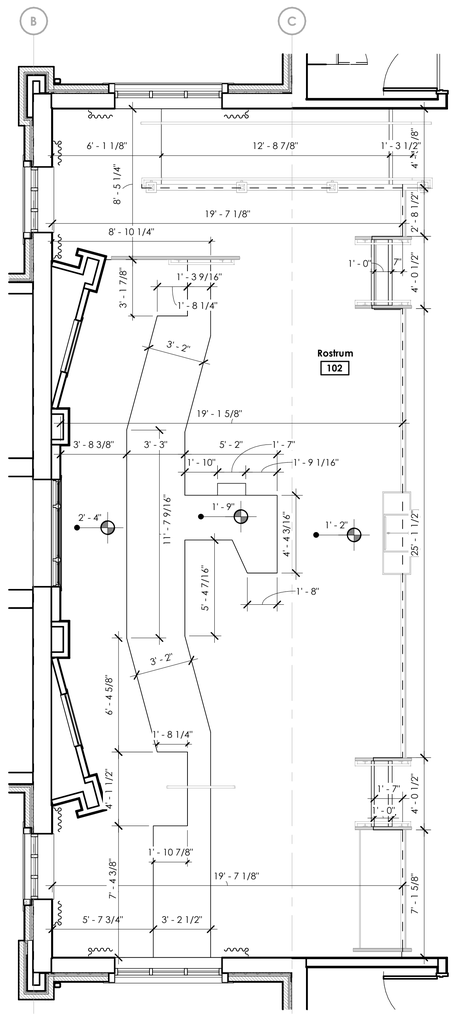

1 Rostrum Framing Dimension Plan

Scale: 1/4" = 1'-0"

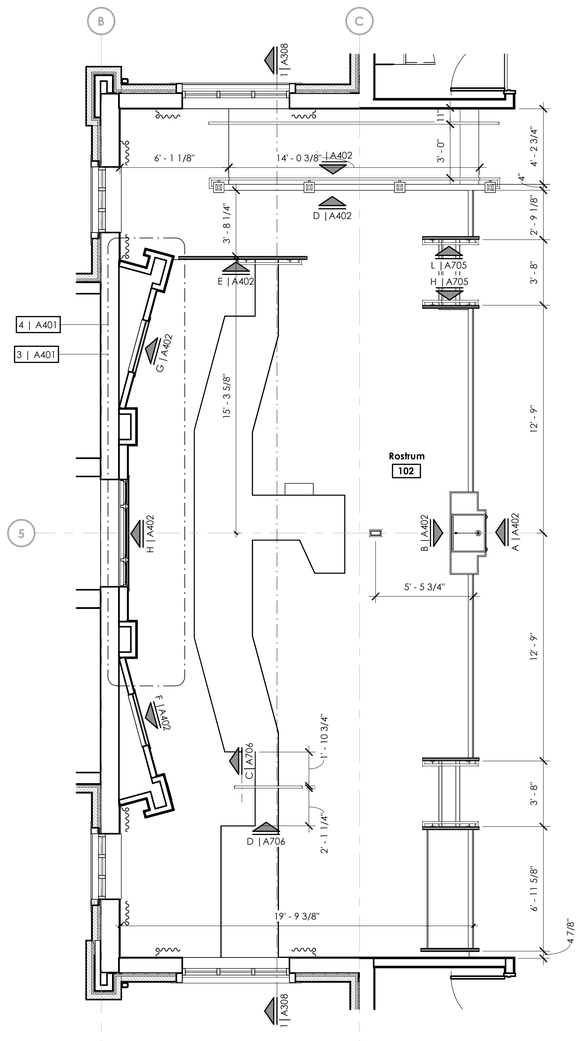

2 Rostrum Casework Dimension Plan

Scale: 1/4" = 1'-0"

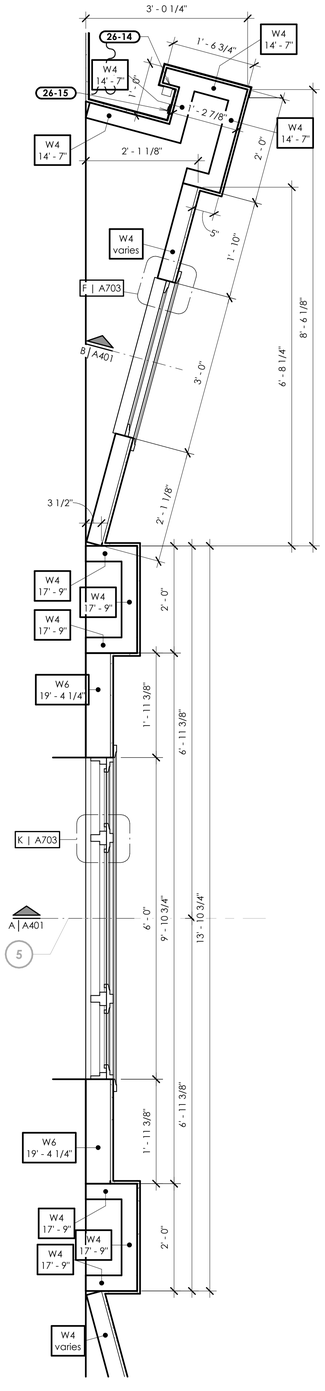

3 Enlarged Rostrum Accent Walls Plan

Scale: 3/4" = 1'-0"

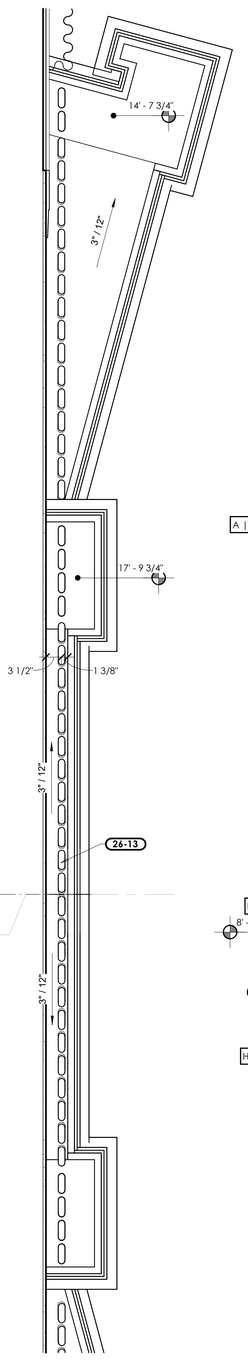

4 Enlarged Rostrum Accent Lighting Plan

Scale: 3/4" = 1'-0"

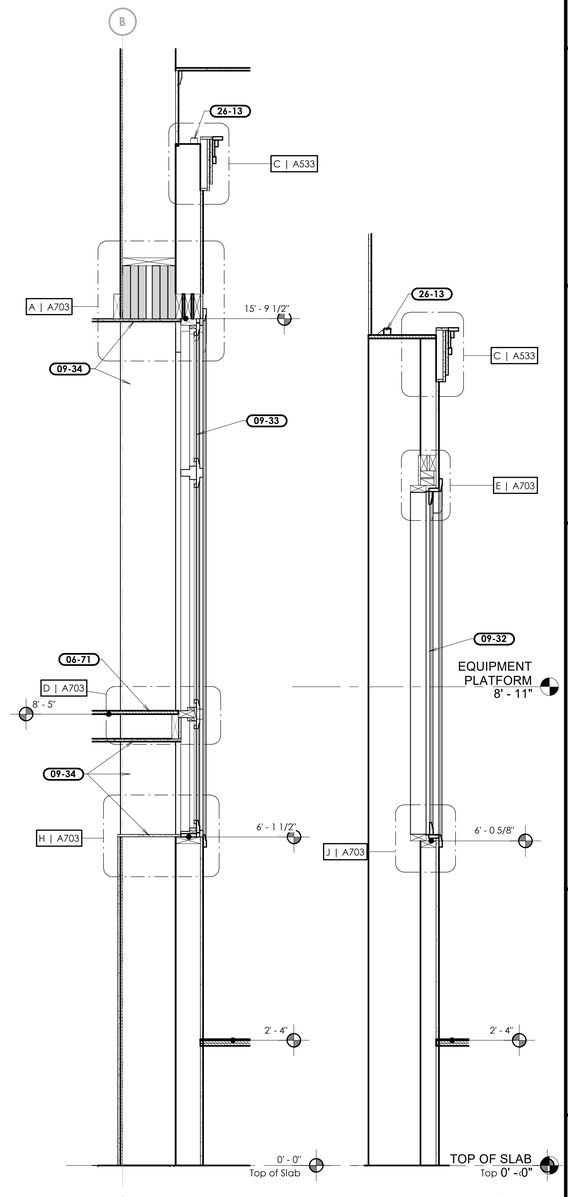

A Accent Wall Section

Scale: 3/4" = 1'-0"

B Accent Wall Section

Scale: 3/4" = 1'-0"

bhd ARCHITECTS
www.bhdarchitects.com
Phone 801.571.0010
Fax 801.571.0303
Toll Free 888.571.0010
65 East Wadsworth Park Drive
Suite 205 Draper, Utah 84020

LICENSED ARCHITECT
Late Theodore Harris
#7578-0301
23 MAY 2025
STATE OF UTAH

THE CHURCH OF
JESUS CHRIST
OF LATTER-DAY SAINTS

Nibley 6 &
Nibley UT West Stake

Approx. 3410 South 1200 West, Nibley, Utah
41.670809, -111.860775

BHD #: 2403
County Parcel: 03:050:0016
Plan Series: Heritage 24
Owner #: 514-4728
Date: 29 May 2025

Drawing Issue and Revision Schedule

#	Date	Description

Enlarged Rostrum Plans and Elevations

A401

5/29/2025 9:33:09 AM

General Notes

A. For hardwood trim profiles see G/A702.

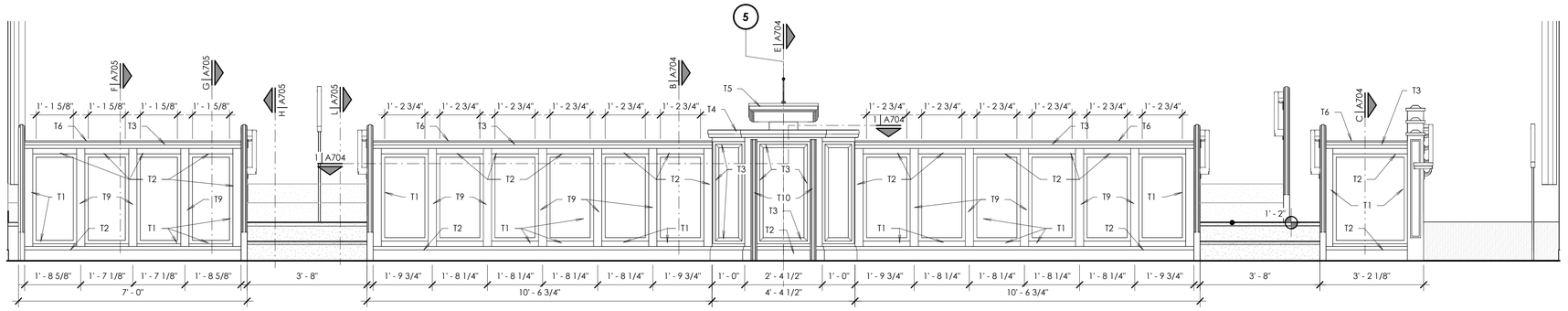

A Rostrum Modesty Wall Front Elevation

Scale: 1/2" = 1'-0"

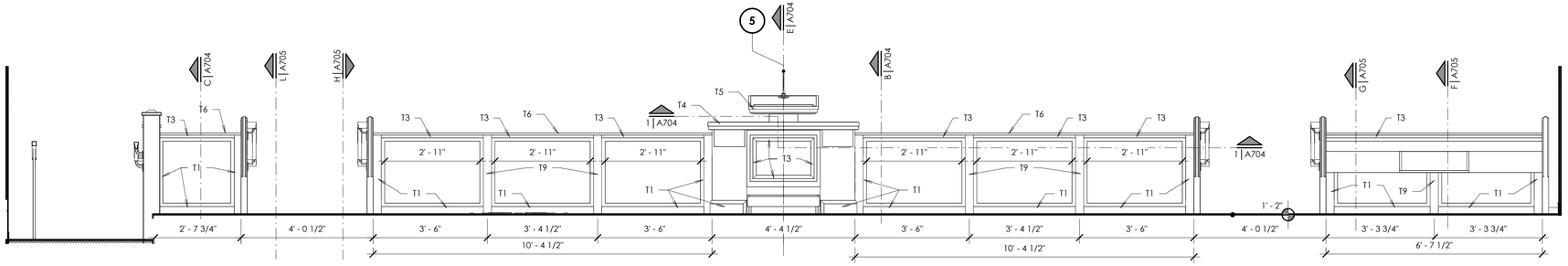

B Rostrum Modesty Wall Rear Elevation

Scale: 1/2" = 1'-0"

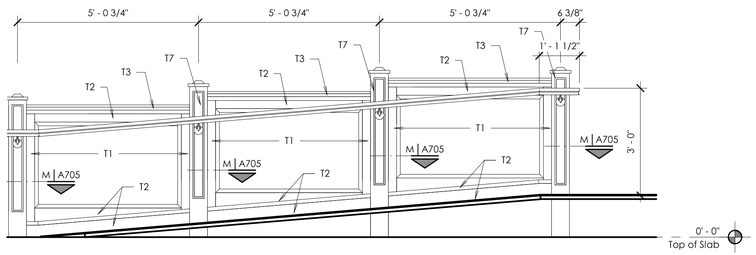

C Rostrum Ramp Panel Inside

Scale: 1/2" = 1'-0"

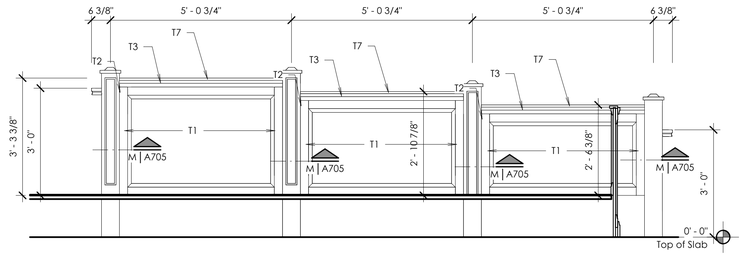

D Rostrum Ramp Panel Outside

Scale: 1/2" = 1'-0"

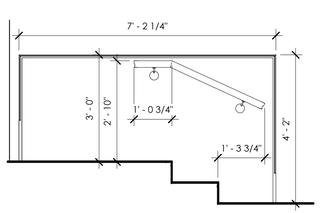

E Rostrum Seating Riser Panel

Scale: 1/2" = 1'-0"

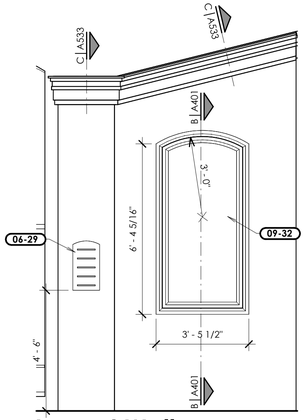

F Accent Wall Elevation

Scale: 3/8" = 1'-0"

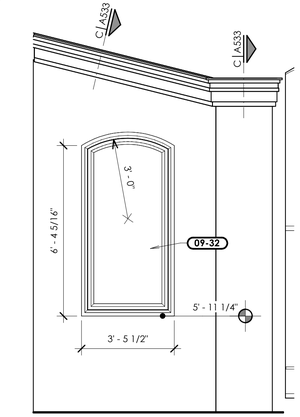

G Accent Wall Elevation

Scale: 3/8" = 1'-0"

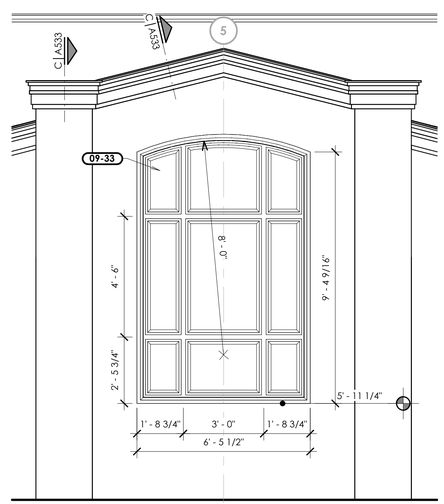

H Accent Wall Elevation

Scale: 3/8" = 1'-0"

bhd ARCHITECTS
www.bhdarchitects.com
Phone 801.571.0010
Fax 801.571.0303
Toll Free 888.571.0010
65 East Wadsworth Park Drive
Suite 205 Draper, Utah 84020

LICENSED ARCHITECT
Lafe Theodore Harris
29 May 2025
6928898-0301
STATE OF UTAH

THE CHURCH OF
JESUS CHRIST
OF LATTER-DAY SAINTS

Nibley 6 & Nibley UT West Stake

Approx. 3410 South 1200 West, Nibley, Utah
41.670809, -111.860775

Date:	BHD #:	County Parcel:	Plan Series:	Owner #:
29 May 2025	2403	03:050:0016	Heritage 24	514-4728

Drawing Issue and Revision Schedule

#	Date	Description

Rostrum Millwork Elevations

A402

5/29/2025 9:33:12 AM

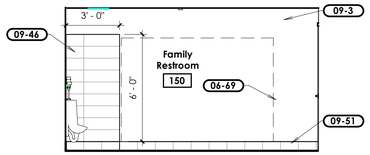

A Elevation

Scale: 1/4" = 1'-0"

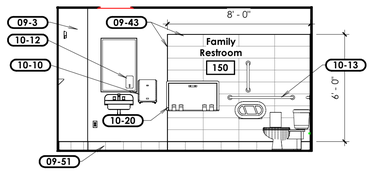

B Elevation

Scale: 1/4" = 1'-0"

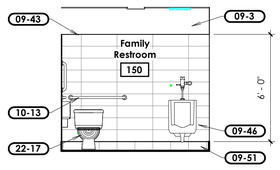

C Elevation

Scale: 1/4" = 1'-0"

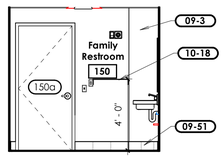

D Elevation

Scale: 1/4" = 1'-0"

Keyed Notes

01-4	Artwork furnished and installed by owner. Install blocking. Typical.
05-3	Stainless steel handrail.
06-11	Wall-mounted open adjustable shelving. See D/A702.
06-12	Solid surface countertop and splash.
06-13	Recessed hymn book shelf. See D/A408.
06-16	Architectural casework. Refer to cabinet details.
06-21	Hardwood chair rail. See E/A702. At windows, see F/A702.
06-34	Hardwood jamb.
06-69	Provide backing in wall for future adult changing table.
06-70	Provide a platform for the main electrical panel the same height as the tile base with a 2" toe kick.
06-74	Sidesplash at all locations where countertops abut walls. Typical.
09-3	Painted and textured 5/8" gypsum board.
09-8	Tile base. See finish schedule and the specifications.
09-14	Carpet base. See finish schedule and specifications.
09-16	Sisal wall covering.
09-43	Install metal tile edge trim at all exposed tile edges. See Q/A553.

Keyed Notes

09-46	8" x 24" ceramic wall tile.
09-51	6" x 12" porcelain cove base. Cut height to fit when installed in cabinetry toe kick.
09-52	2" wide contrasting strip of carpet at stair nosing.
10-10	Paper towel dispenser.
10-12	Soap dispenser.
10-13	Grab bars.
10-16	Mop rack.
10-18	Metal shelf.
10-20	Baby changing station.
10-22	Semi-recessed fire extinguisher cabinet. See E/A554 and code plans.
22-2	Floor sink. See plumbing sheets.
22-17	Water closet. See plumbing sheets.
26-4	Electrical panel. See electrical sheets.

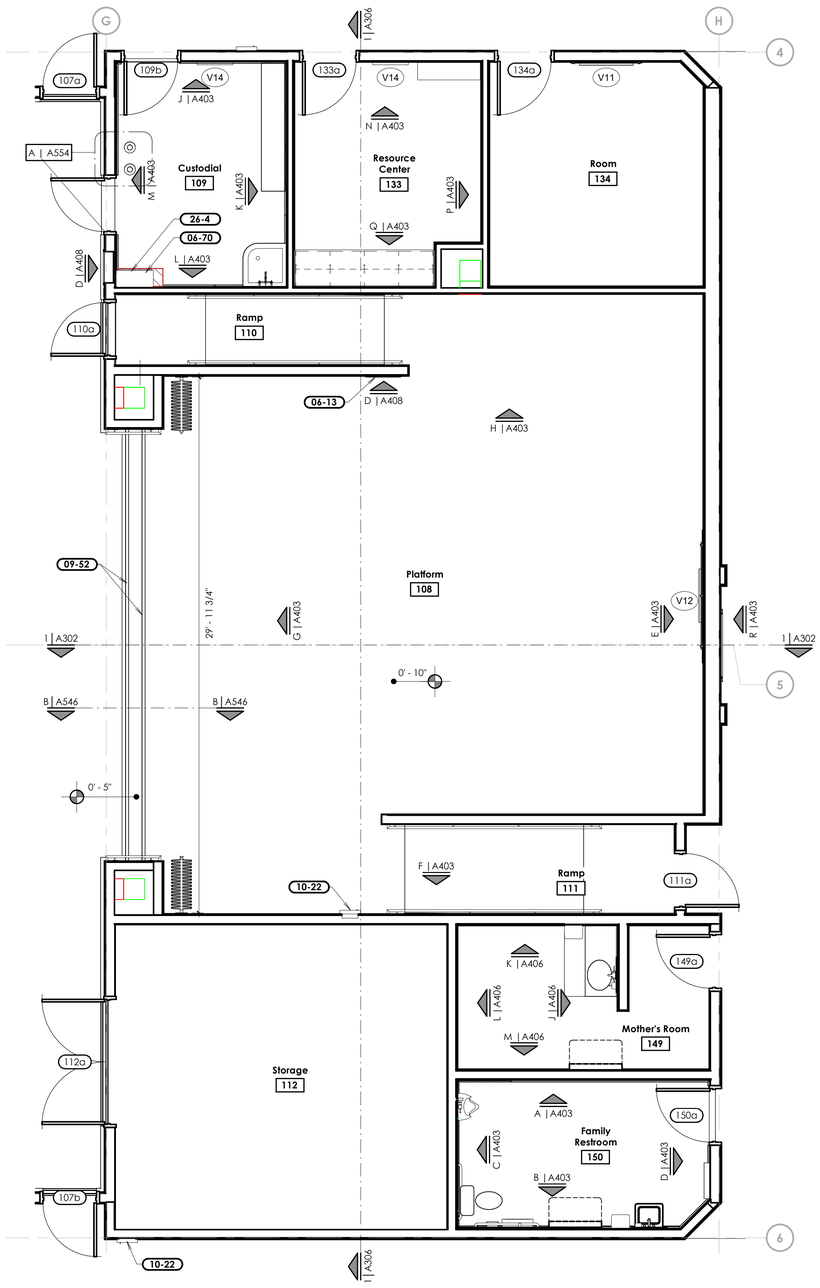

1 Enlarged Platform Plan

Scale: 1/4" = 1'-0"

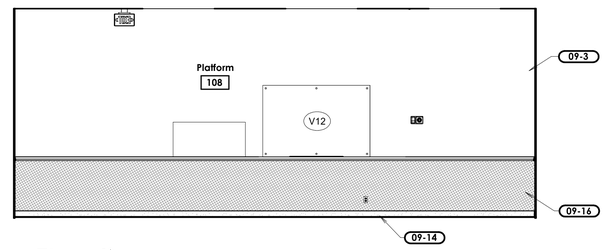

E Elevation

Scale: 1/4" = 1'-0"

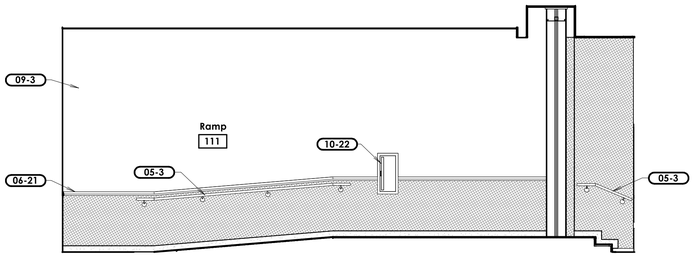

F Elevation

Scale: 1/4" = 1'-0"

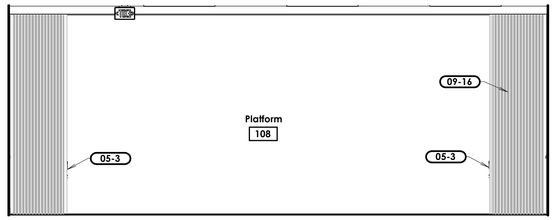

G Elevation

Scale: 1/4" = 1'-0"

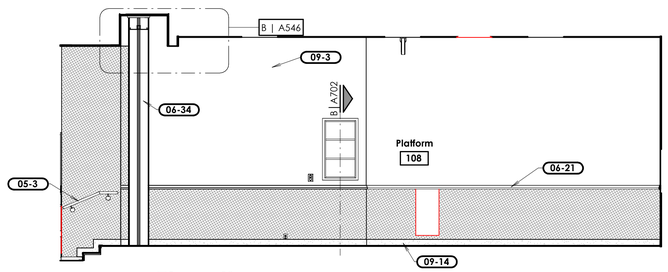

H Elevation

Scale: 1/4" = 1'-0"

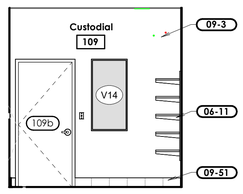

J Elevation

Scale: 1/4" = 1'-0"

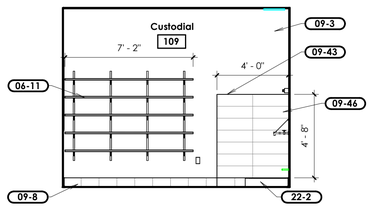

K Elevation

Scale: 1/4" = 1'-0"

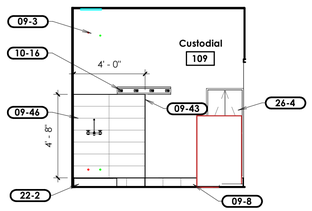

L Elevation

Scale: 1/4" = 1'-0"

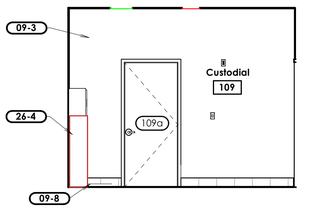

M Elevation

Scale: 1/4" = 1'-0"

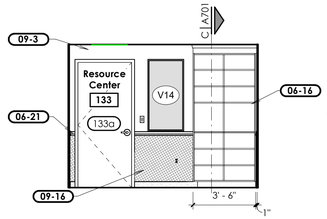

N Elevation

Scale: 1/4" = 1'-0"

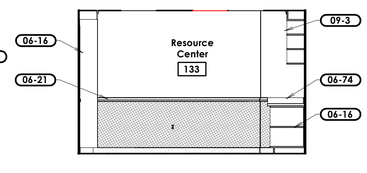

P Elevation

Scale: 1/4" = 1'-0"

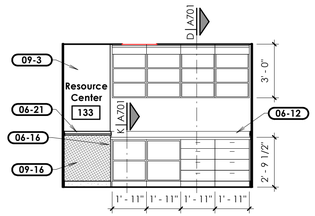

Q Elevation

Scale: 1/4" = 1'-0"

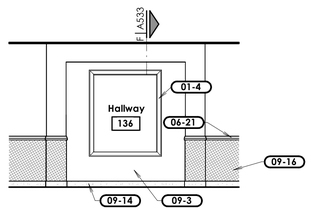

R Elevation

Scale: 1/4" = 1'-0"

5/29/2025 9:33:14 AM

bhd ARCHITECTS
www.bhdarchitects.com
Phone 801.571.0010
Fax 801.571.0303
Toll Free 888.571.0010
65 East Wadsworth Park Drive
Suite 205 Draper, Utah 84020

LICENSED ARCHITECT
Late
Theodore
Harris
7627878-0301
23 MAY 2025
STATE OF UTAH

THE CHURCH OF
JESUS CHRIST
OF LATTER-DAY SAINTS

Nibley 6 &
Nibley UT West Stake

Approx. 3410 South 1200 West, Nibley, Utah
41.670809, -111.860775

Owner #: 514-4728
Plan Series: Heritage 24
County Parcel: 03:050:0016
BHD #: 2403
Date: 29 May 2025

Drawing Issue and Revision Schedule

#	Date	Description
1	29 May 2024	Bid Documents

Enlarged Platform Plans and Elevations

A403

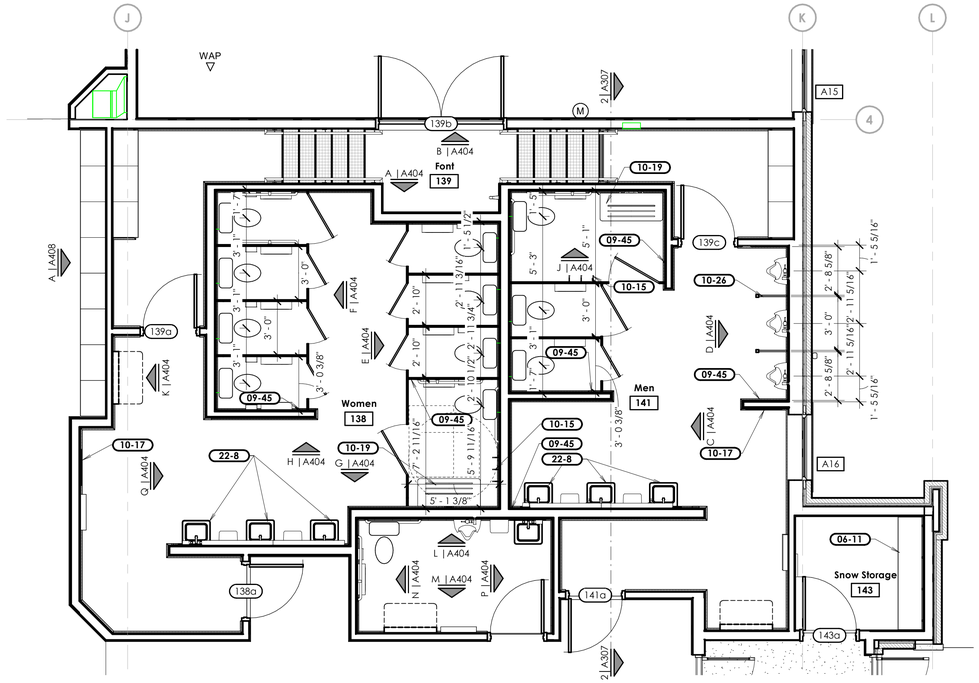

1 Enlarged Restrooms Plan

Scale: 1/4" = 1'-0"

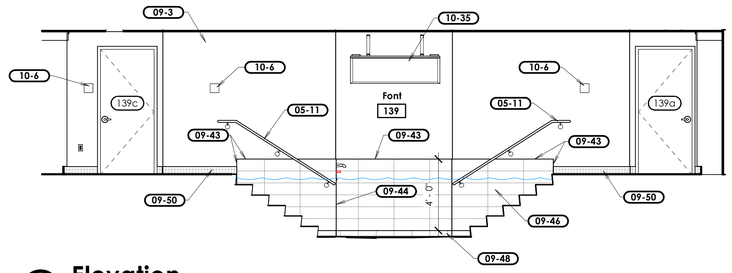

A Elevation

Scale: 1/4" = 1'-0"

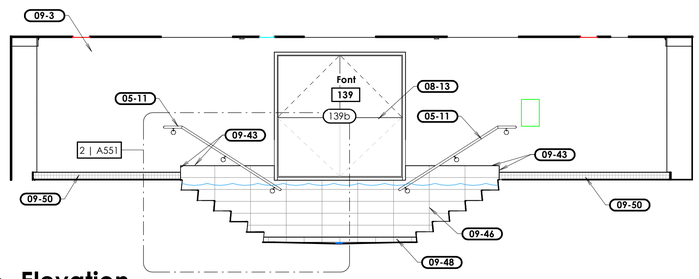

B Elevation

Scale: 1/4" = 1'-0"

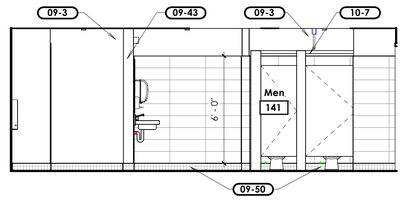

C Elevation

Scale: 1/4" = 1'-0"

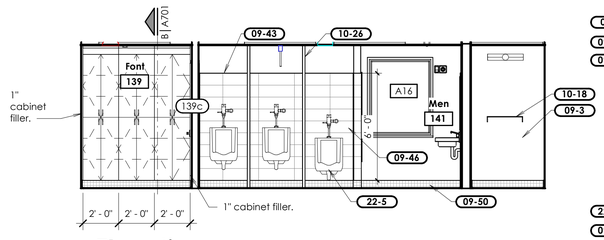

D Elevation

Scale: 1/4" = 1'-0"

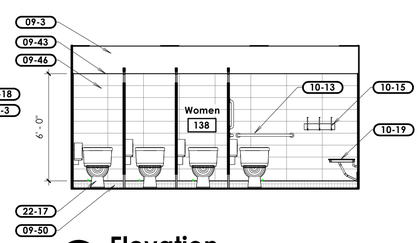

E Elevation

Scale: 1/4" = 1'-0"

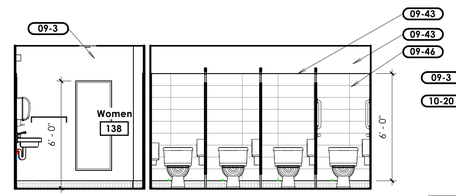

F Elevation

Scale: 1/4" = 1'-0"

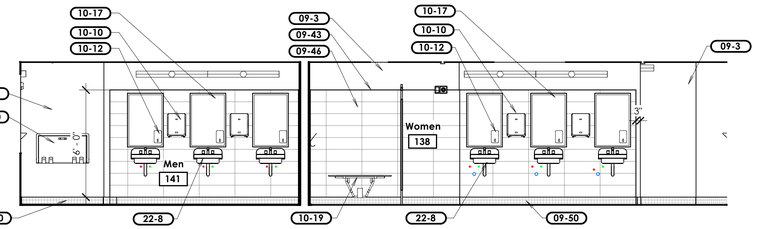

G Elevation

Scale: 1/4" = 1'-0"

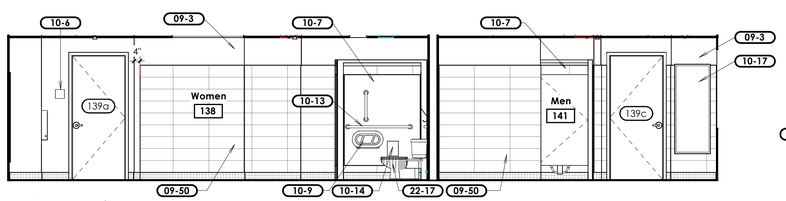

H Elevation

Scale: 1/4" = 1'-0"
WAP

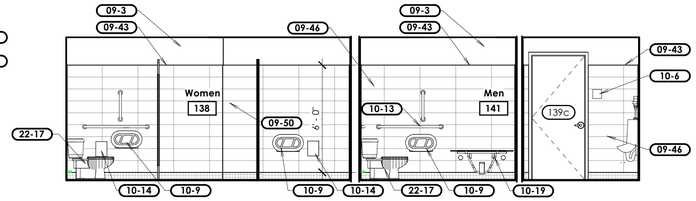

J Elevation

Scale: 1/4" = 1'-0"

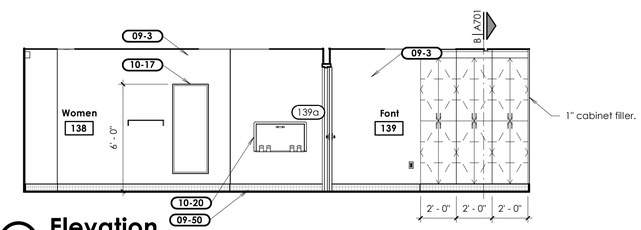

K Elevation

Scale: 1/4" = 1'-0"

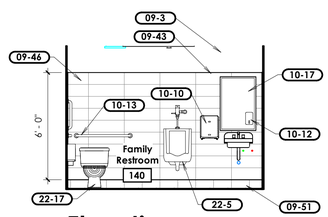

L Elevation

Scale: 1/4" = 1'-0"

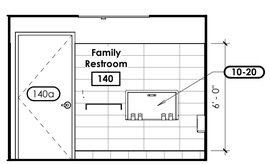

M Elevation

Scale: 1/4" = 1'-0"

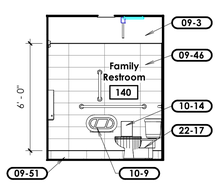

N Elevation

Scale: 1/4" = 1'-0"

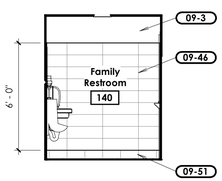

P Elevation

Scale: 1/4" = 1'-0"

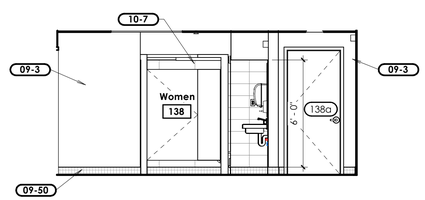

Q Elevation

Scale: 1/4" = 1'-0"

Keyed Notes

05-11	Stainless steel handrail. Electrically bond and ground the handrails. Modify handrail bracket locations as necessary to avoid door frames and adjust offset for tile.
06-11	Wall-mounted open adjustable shelving. See D/A702.
08-13	Tempered font glass. See P/A553.
09-3	Painted and textured 5/8" gypsum board.
09-43	Install metal tile edge trim at all exposed tile edges. See Q/A553.
09-44	Install metal tile edge corner trim at outside tile corner. See R/A553.
09-45	End of wall tile.
09-46	8" x 24" ceramic wall tile.
09-48	4" x 12" ceramic tile cove base.
09-50	5" high porcelain cove base. Bullnosed at painted walls. Flat top at tile walls.
09-51	6" x 12" porcelain cove base. Cut height to fit when installed in cabinetry toe kick.
10-6	Room sign furnished by owner and installed by contractor. See signage plans.
10-7	Metal toilet compartment.
10-9	double roll toilet paper dispenser.
10-10	Paper towel dispenser.
10-12	Soap dispenser.
10-13	Grab bars.
10-14	Sanitary napkin disposal container.
10-15	Robe hook.
10-17	24" x 36" mirror with metal channel frame.
10-18	Metal shelf.
10-19	Folding bench. See H/A554.
10-20	Baby changing station.
10-26	Urinal partition screen with floor-to-ceiling post.
10-35	Font mirror. See B/A551.
22-5	Urinal. See plumbing sheets.
22-8	Lavatory and faucet. See plumbing sheets.
22-17	Water closet. See plumbing sheets.

bhd ARCHITECTS
www.bhdarchitects.com
Phone 801.571.0010
Fax 801.571.0303
Toll Free 888.571.0010
65 East Wadsworth Park Drive
Suite 205 Draper, Utah 84020

LICENSED ARCHITECT
Lafe Theodore Harris
6278378-0301
29 MAY 2025
STATE OF UTAH

THE CHURCH OF JESUS CHRIST OF LATTER-DAY SAINTS

Nibley 6 & Nibley UT West Stake

Approx. 3410 South 1200 West, Nibley, Utah
41.672809 -111.860775

Owner #: 514-4728
Plan Series: Heritage 24
County Parcel: 03:050:0016
BHD #: 2403
Date: 29 May 2025

Drawing Issue and Revision Schedule

#	Date	Description
1	29 May 2024	Bid Documents

Enlarged Restroom Plans and Elevations

A404

5/29/2025 9:33:24 AM

Keyed Notes

06-16	Architectural casework. Refer to cabinet details.
06-21	Hardwood chair rail. See E/A702. At windows, see F/A702.
09-3	Painted and textured 5/8" gypsum board.
09-14	Carpet base. See finish schedule and specifications.
09-16	Sisal wall covering.
09-21	Install sisal wall covering with no joints and with ribs horizontal to the floor (do not slope ribs with ramp).
10-22	Semi-recessed fire extinguisher cabinet. See E/A554 and code plans.

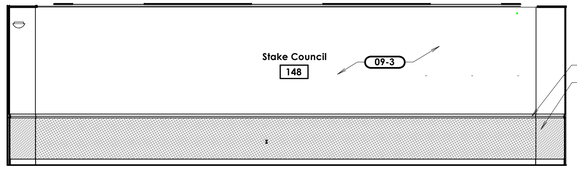

A Elevation
Scale: 1/4" = 1'-0"

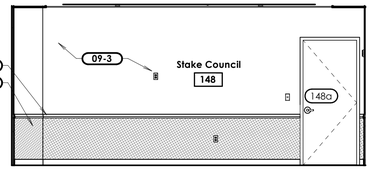

B Elevation
Scale: 1/4" = 1'-0"

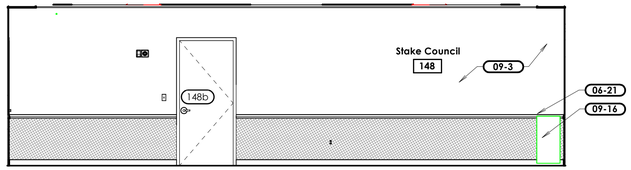

C Elevation
Scale: 1/4" = 1'-0"

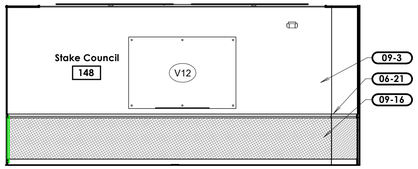

D Elevation
Scale: 1/4" = 1'-0"

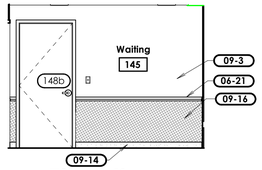

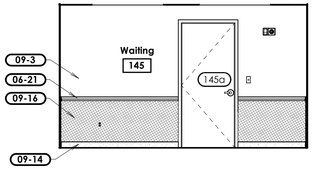

E Elevation
Scale: 1/4" = 1'-0"

F Elevation
Scale: 1/4" = 1'-0"

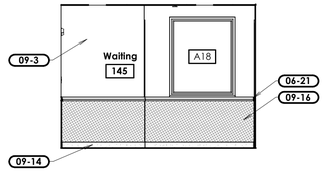

G Elevation
Scale: 1/4" = 1'-0"

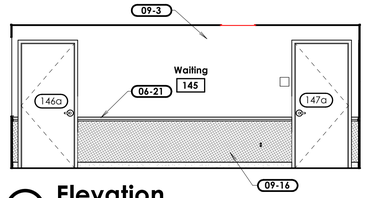

H Elevation
Scale: 1/4" = 1'-0"

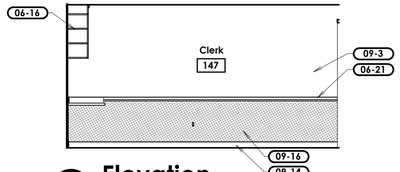

J Elevation
Scale: 1/4" = 1'-0"

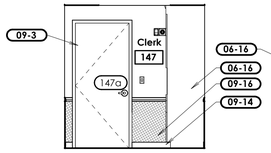

K Elevation
Scale: 1/4" = 1'-0"

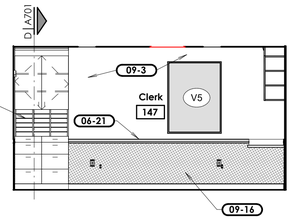

L Elevation
Scale: 1/4" = 1'-0"

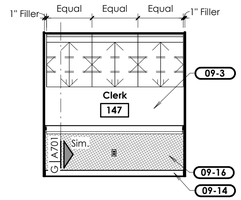

M Elevation
Scale: 1/4" = 1'-0"

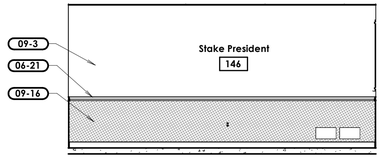

N Elevation
Scale: 1/4" = 1'-0"

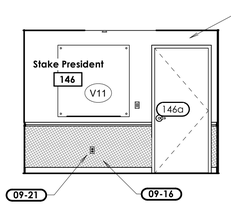

P Elevation
Scale: 1/4" = 1'-0"

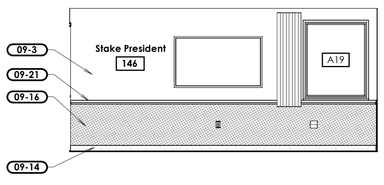

Q Elevation
Scale: 1/4" = 1'-0"

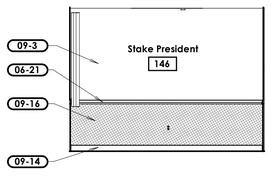

R Elevation
Scale: 1/4" = 1'-0"

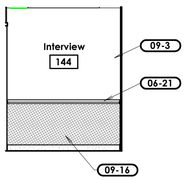

S Elevation
Scale: 1/4" = 1'-0"

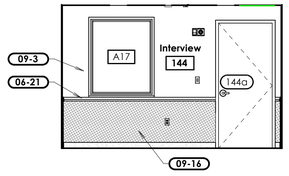

U Elevation
Scale: 1/4" = 1'-0"

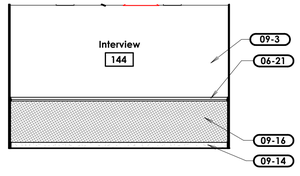

T Elevation
Scale: 1/4" = 1'-0"

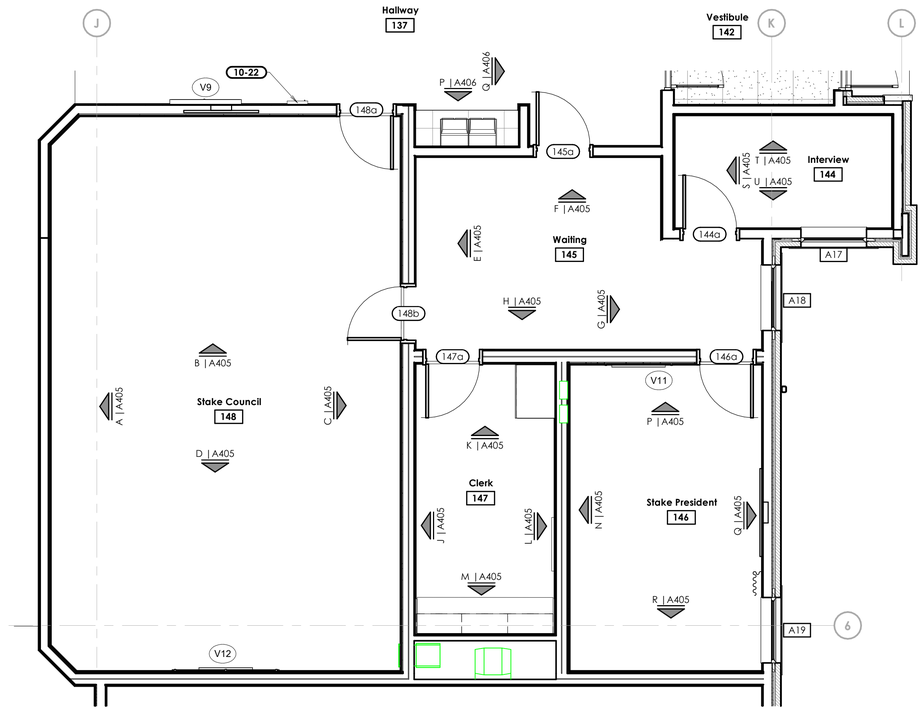

1 Enlarged Stake Suite
Scale: 1/4" = 1'-0"

bhd ARCHITECTS
www.bhdarchitects.com
Phone 801.571.0010
Fax 801.571.0303
Toll Free 888.571.0010
65 East Wadsworth Park Drive
Suite 205 Draper, Utah 84020

LICENSED ARCHITECT
Late Theodore Harris
6278301
23 MAY 2025
STATE OF UTAH

THE CHURCH OF JESUS CHRIST OF LATTER-DAY SAINTS

Nibley 6 & Nibley UT West Stake

Approx. 3410 South 1200 West, Nibley, Utah
41.672809, -111.866775

Owner #: 514-4728
Plan Series: Heritage 24
County Parcel: 03:050:0016
BHD #: 2403
Date: 29 May 2025

Drawing Issue and Revision Schedule

#	Date	Description

Enlarged Stake Suite Plans and Elevations

A405

5/29/2025 9:33:33 AM

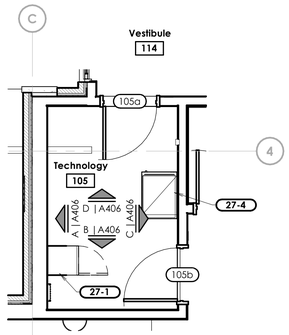

1 Enlarged Technology Room Plan

Scale: 1/4" = 1'-0"

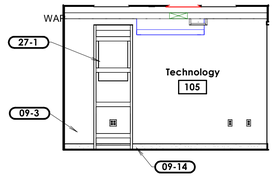

A Elevation

Scale: 1/4" = 1'-0"

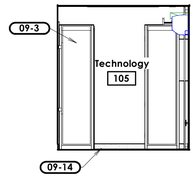

B Elevation

Scale: 1/4" = 1'-0"

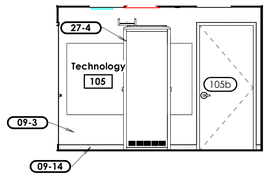

C Elevation

Scale: 1/4" = 1'-0"

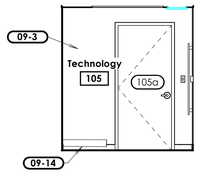

D Elevation

Scale: 1/4" = 1'-0"

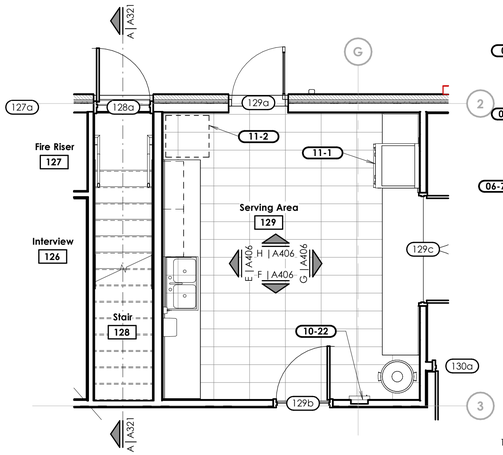

2 Enlarged Serving Area Plan

Scale: 1/4" = 1'-0"

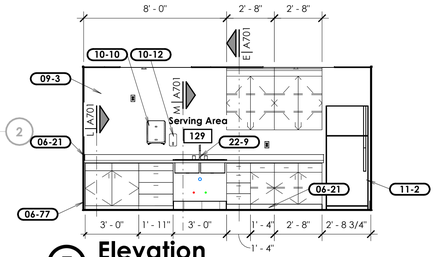

E Elevation

Scale: 1/4" = 1'-0"

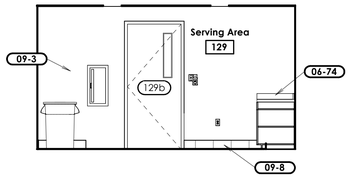

F Elevation

Scale: 1/4" = 1'-0"

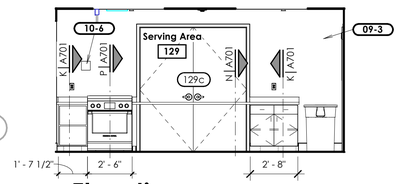

G Elevation

Scale: 1/4" = 1'-0"

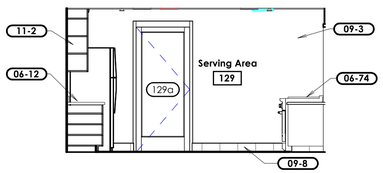

H Elevation

Scale: 1/4" = 1'-0"

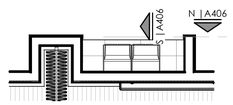

4 Drinking Fountain 120

Scale: 1/4" = 1'-0"

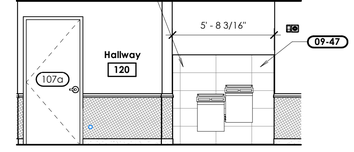

N Elevation

Scale: 1/4" = 1'-0"

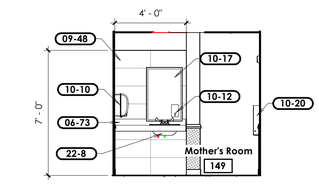

J Elevation

Scale: 1/4" = 1'-0"

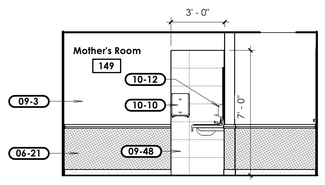

K Elevation

Scale: 1/4" = 1'-0"

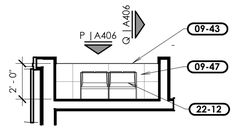

5 Drinking Fountain 138

Scale: 1/4" = 1'-0"

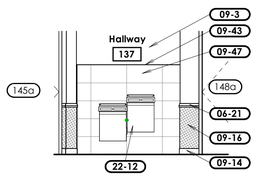

P Elevation

Scale: 1/4" = 1'-0"

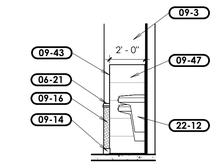

Q Elevation

Scale: 1/4" = 1'-0"

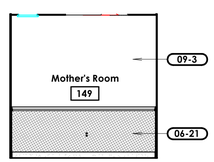

L Elevation

Scale: 1/4" = 1'-0"

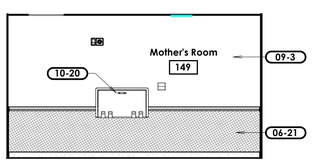

M Elevation

Scale: 1/4" = 1'-0"

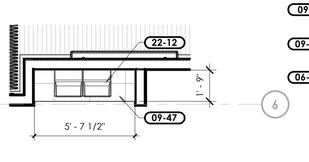

6 Drinking Fountain 153

Scale: 1/4" = 1'-0"

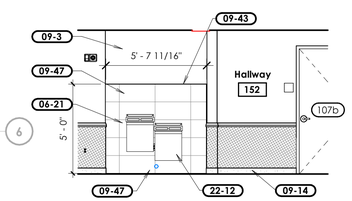

R Elevation

Scale: 1/4" = 1'-0"

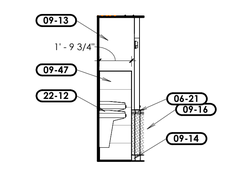

S Elevation

Scale: 1/4" = 1'-0"

Keyed Notes

06-12	Solid surface countertop and splash.
06-21	Hardwood chair rail. See E/A702. At windows, see F/A702.
06-73	Plastic laminate countertop vanity with concealed support brackets, backsplash, and sidesplashes where abutting a wall.
06-74	Sidesplash at all locations where countertops abut walls. Typical.
06-77	1" cabinet filler.
09-3	Painted and textured 5/8" gypsum board.
09-8	Tile base. See finish schedule and the specifications.
09-13	Wood athletic flooring system.
09-14	Carpet base. See finish schedule and specifications.
09-16	Sisal wall covering.
09-43	Install metal tile edge trim at all exposed tile edges. See Q/A553.
09-47	12" x 24" porcelain tile.
09-48	4" x 12" ceramic tile cove base.
10-6	Room sign furnished by owner and installed by contractor, See signage plans.
10-10	Paper towel dispenser.
10-12	Soap dispenser.
10-17	24" x 36" mirror with metal channel frame.
10-20	Baby changing station.
10-22	Semi-recessed fire extinguisher cabinet. See E/A554 and code plans.
11-1	Electric range.
11-2	Refrigerator.
22-8	Lavatory and faucet. See plumbing sheets.
22-9	Sink. See plumbing sheets.
22-12	Electric water cooler. Provide solid blocking in wall as required by manufacturer. See plumbing sheets.
27-1	Data rack. See technology sheets.
27-4	Audio/visual Box. See technology sheets.

bhd ARCHITECTS
www.bhdarchitects.com
Phone 801.571.0010
Fax 801.571.0303
Toll Free 888.571.0010
65 East Wadsworth Park Drive
Suite 205 Draper, Utah 84020

LICENSED ARCHITECT Late Theodore Harris 23 MAY 2025 6278-0301 STATE OF UTAH

THE CHURCH OF JESUS CHRIST OF LATTER-DAY SAINTS

Nibley 6 & Nibley UT West Stake

Approx. 3410 South 1200 West, Nibley, Utah
41.670809, -111.840775

BHD #: 2403
County Parcel: 03:050:0016
Plan Series: Heritage 24
Owner #: 514-4728
Date: 29 May 2025

Drawing Issue and Revision Schedule

#	Date	Description

Enlarged Tech. Room, Serving Area, Mother's Room Enlarged Plans and Elevations

A406

5/29/2025 9:33:43 AM

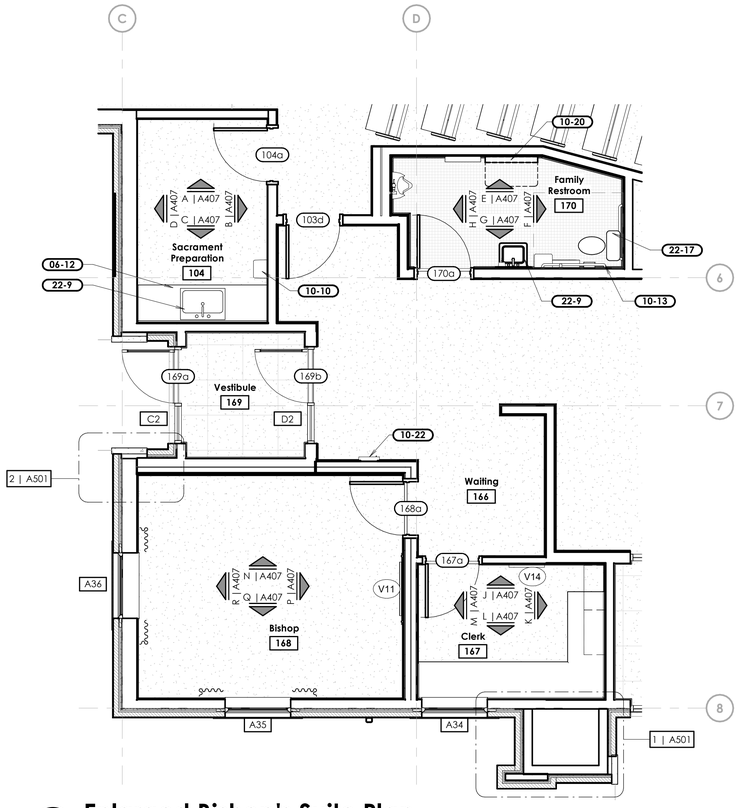

1 Enlarged Bishop's Suite Plan

Scale: 1/4" = 1'-0"

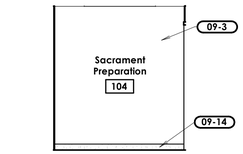

A Elevation

Scale: 1/4" = 1'-0"

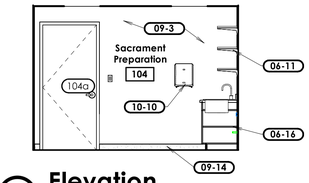

B Elevation

Scale: 1/4" = 1'-0"

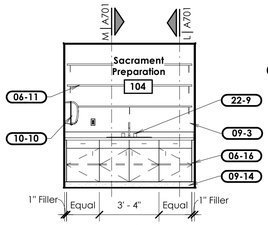

C Elevation

Scale: 1/4" = 1'-0"

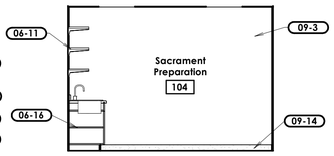

D Elevation

Scale: 1/4" = 1'-0"

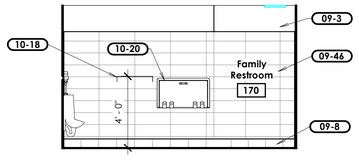

E Elevation

Scale: 1/4" = 1'-0"

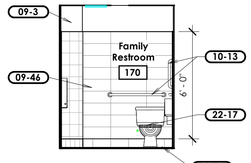

F Elevation

Scale: 1/4" = 1'-0"

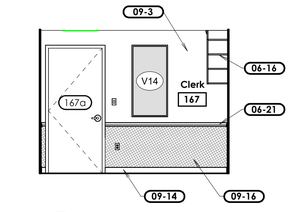

J Elevation

Scale: 1/4" = 1'-0"

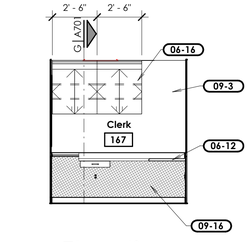

K Elevation

Scale: 1/4" = 1'-0"

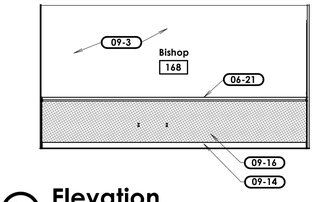

N Elevation

Scale: 1/4" = 1'-0"

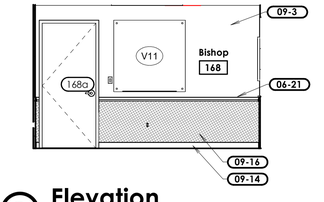

P Elevation

Scale: 1/4" = 1'-0"

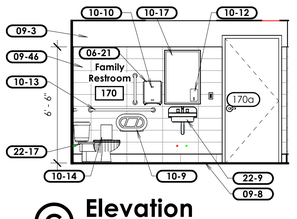

G Elevation

Scale: 1/4" = 1'-0"

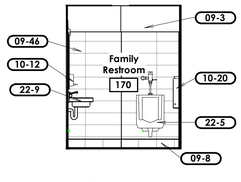

H Elevation

Scale: 1/4" = 1'-0"

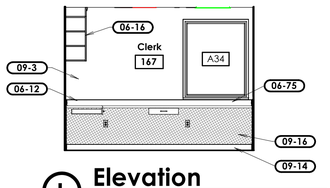

L Elevation

Scale: 1/4" = 1'-0"

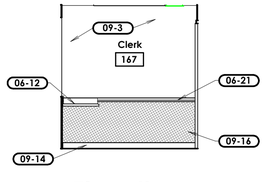

M Elevation

Scale: 1/4" = 1'-0"

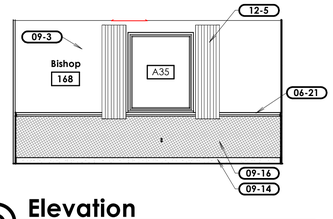

Q Elevation

Scale: 1/4" = 1'-0"

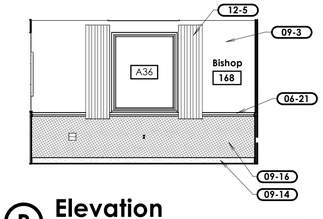

R Elevation

Scale: 1/4" = 1'-0"

Keyed Notes

06-11	Wall-mounted open adjustable shelving. See D/A702.
06-12	Solid surface countertop and splash.
06-16	Architectural casework. Refer to cabinet details.
06-21	Hardwood chair rail. See E/A702. At windows, see F/A702.
06-75	Notch countertop backsplash around window opening and window stool. Abut backsplash into window stool. Install plastic laminate on the cut edge of the backsplash.
09-3	Painted and textured 5/8" gypsum board.
09-8	Tile base. See finish schedule and the specifications.
09-14	Carpet base. See finish schedule and specifications.
09-16	Sisal wall covering.
09-46	8" x 24" ceramic wall tile.
10-9	double roll toilet paper dispenser.
10-10	Paper towel dispenser.
10-12	Soap dispenser.
10-13	Grab bars.
10-14	Sanitary napkin disposal container.
10-17	24" x 36" mirror with metal channel frame.
10-18	Metal shelf.
10-20	Baby changing station.
10-22	Semi-recessed fire extinguisher cabinet. See E/A554 and code plans.
12-5	Casement drape.
22-5	Urinal. See plumbing sheets.
22-9	Sink. See plumbing sheets.
22-17	Water closet. See plumbing sheets.

bhd ARCHITECTS
www.bhdarchitects.com
Phone 801.571.0010
Fax 801.571.0303
Toll Free 888.571.0010
65 East Wadsworth Park Drive
Suite 205 Draper, Utah 84020

LICENSED ARCHITECT Late Theodore Harris 23 MAY 2025 6278-0301 STATE OF UTAH

THE CHURCH OF JESUS CHRIST OF LATTER-DAY SAINTS

Nibley 6 & Nibley UT West Stake

Approx. 3410 South 1200 West, Nibley, Utah
41.670809, -111.860775

Owner #: 514-4728
Plan Series: Heritage 24
County Parcel: 03:050:0016
BHD #: 2403
Date: 29 May 2025

Drawing Issue and Revision Schedule

#	Date	Description

Enlarged Bishop's Suite Plans and Elevations

A407

5/29/2025 9:33:51 AM

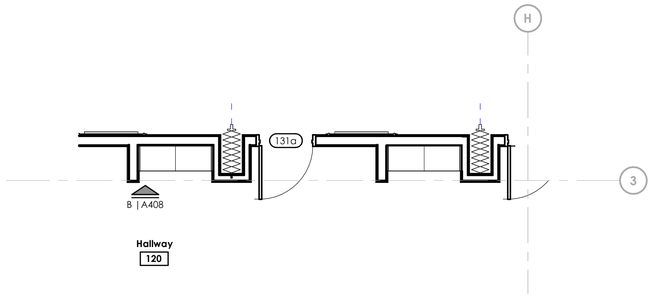

1 Enlarged Storage Cabinets in Hallway 120 Plan
Scale: 1/4" = 1'-0"

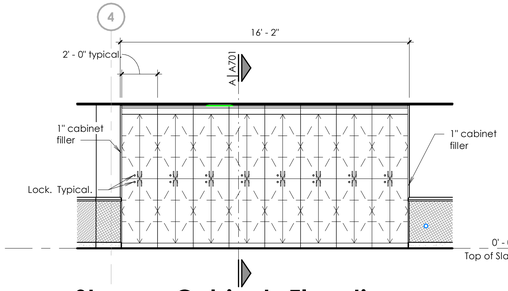

A Storage Cabinets Elevation
Scale: 1/4" = 1'-0"

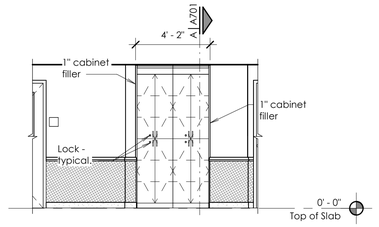

B Storage Cabinets Elevation
Scale: 1/4" = 1'-0"

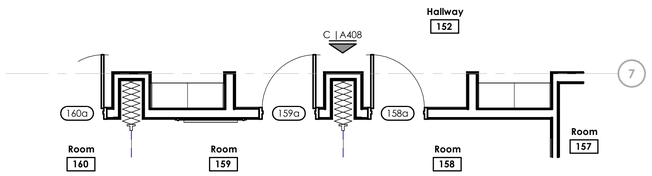

2 Enlarged Storage Cabinets in Hallway 152 Plan
Scale: 1/4" = 1'-0"

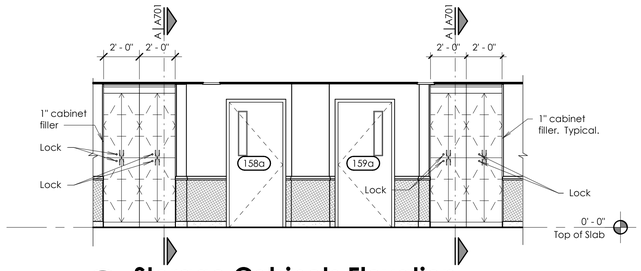

C Storage Cabinets Elevation
Scale: 1/4" = 1'-0"

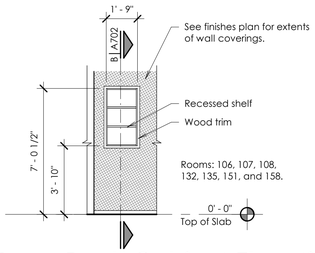

D Hymn Book Cabinet Elevation
Scale: 1/4" = 1'-0"

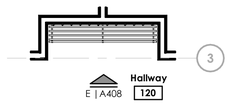

3 Enlarged Coat Rack in Hallway 120 Plan
Scale: 1/4" = 1'-0"

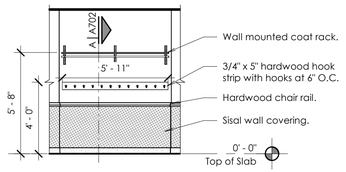

E Enlarged Coat Rack Elevation
Scale: 1/4" = 1'-0"

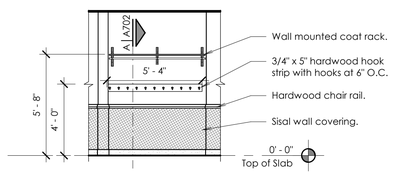

F Enlarged Coat Rack Elevation
Scale: 1/4" = 1'-0"

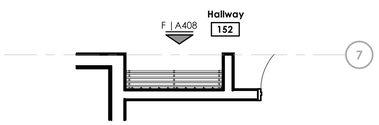

4 Enlarged Coat Rack in Hallway 152 Plan
Scale: 1/4" = 1'-0"

5/29/2025 9:33:56 AM

bhd ARCHITECTS
www.bhdarchitects.com
Phone 801.571.0010
Fax 801.571.0303
Toll Free 888.571.0010
65 East Wadsworth Park Drive
Suite 205 Draper, Utah 84020

LICENSED ARCHITECT
Lafe Theodore Harris
6928898-0301
29 May 2025
STATE OF UTAH

THE CHURCH OF
JESUS CHRIST
OF LATTER-DAY SAINTS

Nibley 6 &
Nibley UT West Stake

Approx. 3410 South 1200 West, Nibley, Utah
41.670809, -111.860775

Date:	BHD #:	County Parcel:	Plan Series:	Owner #:
29 May 2025	2403	03:050:0016	Heritage 24	514-4728

Drawing Issue and Revision Schedule

#	Date	Description

Enlarged Storage Cabinets and Coat Racks Plans and Elevations

A408

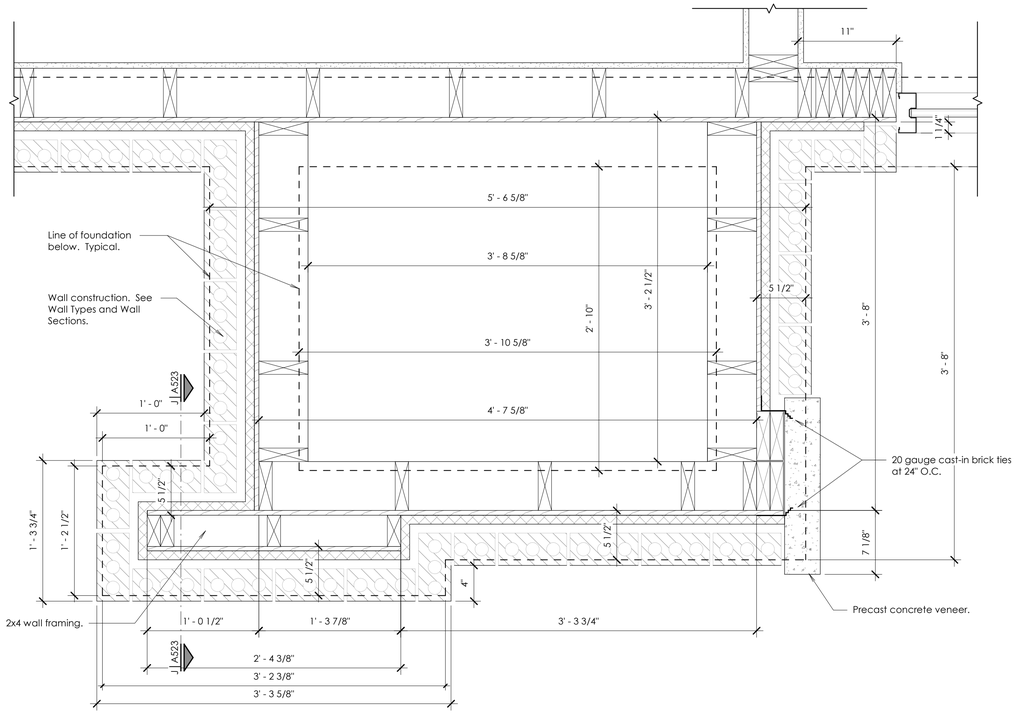

1 Enlarged Column Detail

Scale: 1 1/2" = 1'-0"

Keyed Notes

03-3	Reinforced concrete footing and foundation. See structural sheets.
03-4	Anchor bolt. See structural sheets.
04-9	Weep vents and foundation flashing.
04-10	Mortar guard.
06-6	Wall sheathing. See structural drawings.
07-1	Bituminous dampproofing from 2" below grade down to the bottom of the foundation wall and across the top of the footing.
07-2	Plastic sheet air barrier.
07-3	3" rigid insulation.
07-16	Below-grade vapor retarder system.
09-20	5/8" Type X gypsum board. Install continuous sheet vapor retarder between gypsum board and wall studs. Seal vapor retarder air tight.
09-41	Wall base. See Finishes Plans.

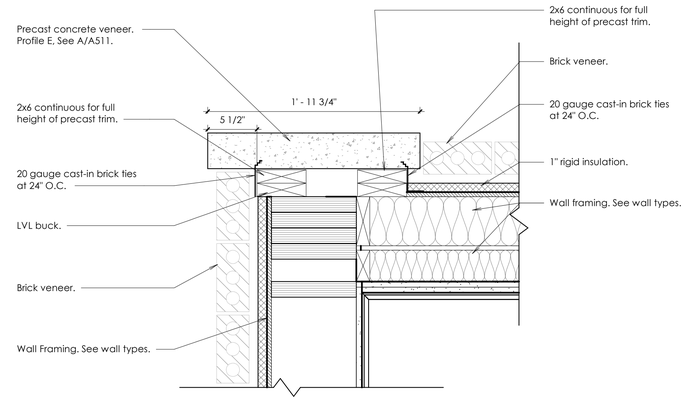

2 Enlarged Precast Detail

Scale: 1 1/2" = 1'-0"

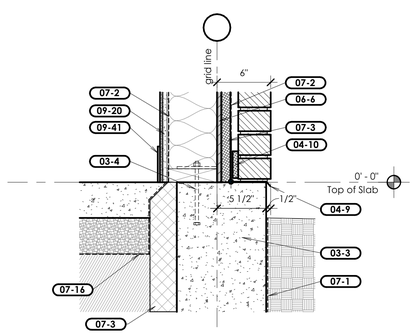

A Detail

Scale: 1 1/2" = 1'-0"

bhd ARCHITECTS
www.bhdarchitects.com
Phone 801.571.0010
Fax 801.571.0303
Toll Free 888.571.0010
65 East Wadsworth Park Drive
Suite 205 Draper, Utah 84020

LICENSED ARCHITECT Late Theodore Harris 6278301 STATE OF UTAH 23 MAY 2025

THE CHURCH OF JESUS CHRIST OF LATTER-DAY SAINTS

Nibley 6 & Nibley UT West Stake

Approx. 3410 South 1200 West, Nibley, Utah
41.670809, -111.860775

BHD #: 2403
County Parcel: 03:050:0016
Plan Series: Heritage 24
Owner #: 514-4728
Date: 29 May 2025

Drawing Issue and Revision Schedule

#	Date	Description

Details

A501

5/29/2025 9:33:57 AM

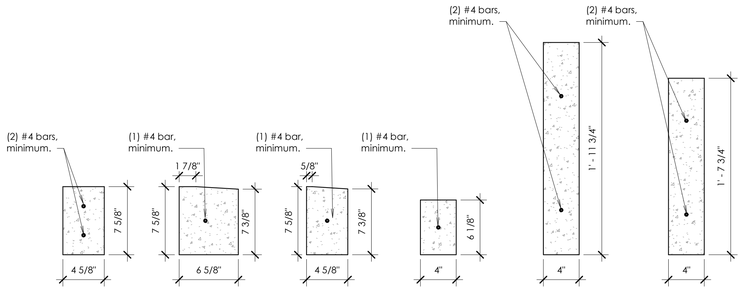

Precast Trim General Notes

1. The precast concrete manufacturer is required to design and provide calculations for the cast-in-place straps, ties, inserts, attachment methods, and details. The steel lintels that support the suspended precast concrete pieces are required to have holes drilled on-site as necessary to align with the bolts and cast-in-place inserts.
2. All exposed edges to have 1/8" formed radius.
3. Coordinate cast-in insert locations with mason and architect. Provide shop drawings.

A Precast Profiles

Scale: 1 1/2" = 1'-0"

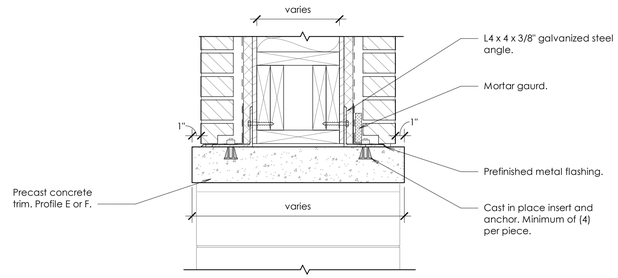

B Precast Arch Head

Scale: 1 1/2" = 1'-0"

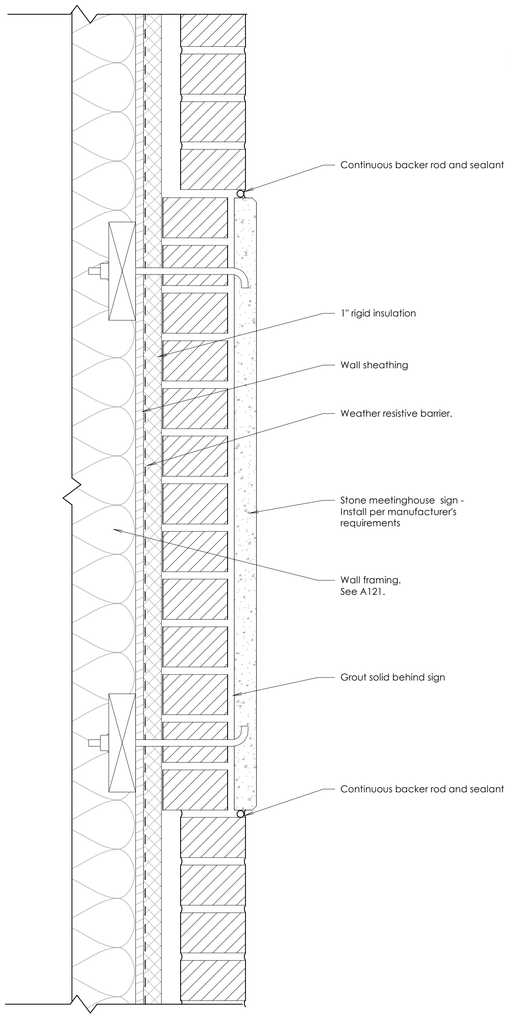

C Stone Meetinghouse Sign Detail

Scale: 3" = 1'-0"

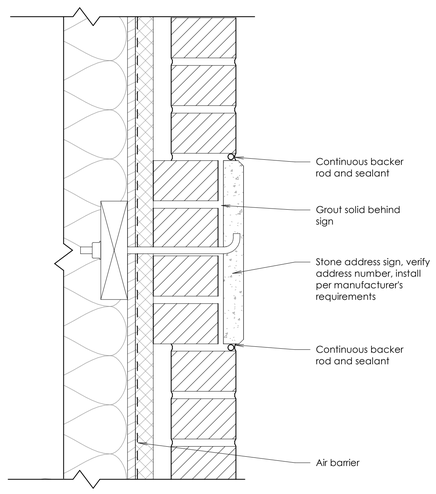

D Stone Address Sign Detail

Scale: 3" = 1'-0"

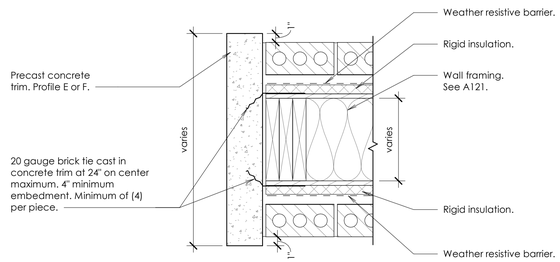

E Precast Arch Jamb

Scale: 1 1/2" = 1'-0"

5/29/2025 9:33:58 AM

bhd ARCHITECTS
www.bhdarchitects.com
Phone 801.571.0010
Fax 801.571.0303
Toll Free 888.571.0010
65 East Wadsworth Park Drive
Suite 205 Draper, Utah 84020

LICENSED ARCHITECT Late Theodore Harris 23 MAY 2025 6278-0301 STATE OF UTAH

THE CHURCH OF JESUS CHRIST OF LATTER-DAY SAINTS

Nibley 6 & Nibley UT West Stake

Approx. 3410 South 1200 West, Nibley, Utah
41.670809, -111.866775

BHD #: 2403
County Parcel: 03050:0016
Plan Series: Heritage 24
Owner #: 514-4728
Date: 29 May 2025

Drawing Issue and Revision Schedule

#	Date	Description

Exterior Details

A511

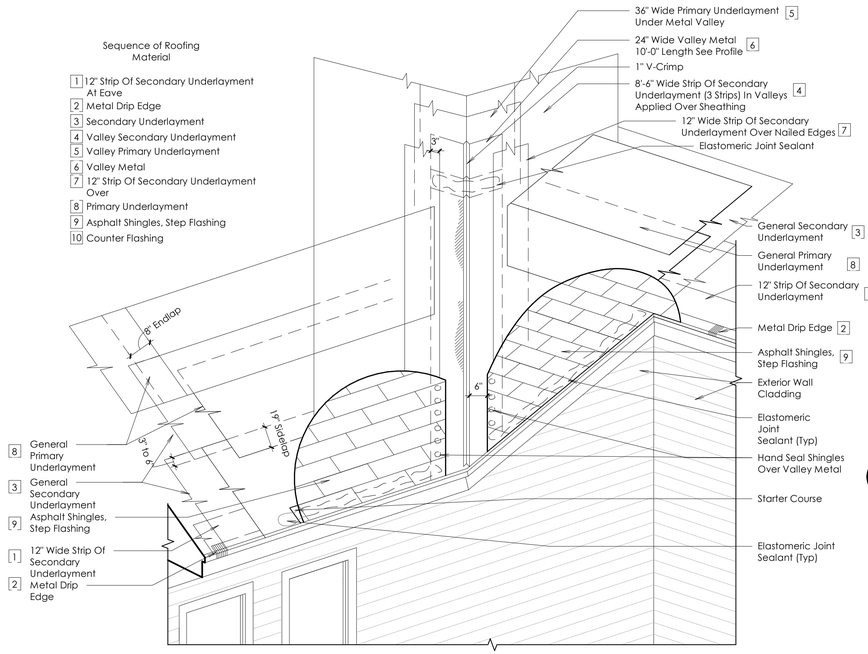

A Entry Gable Valley Flashing

Scale: 1/2" = 1'-0"

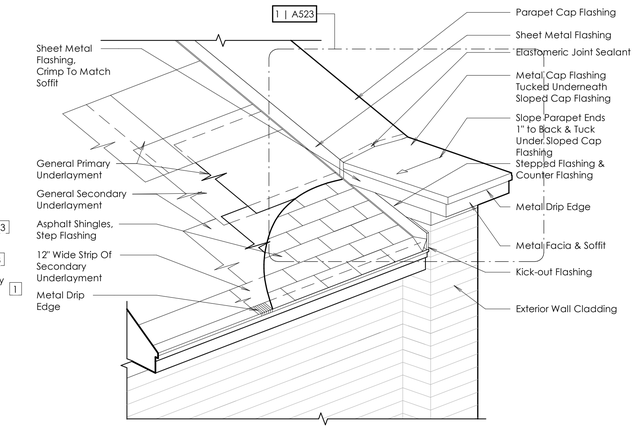

B Front Parapet Roof Flashing

Scale: 1/2" = 1'-0"

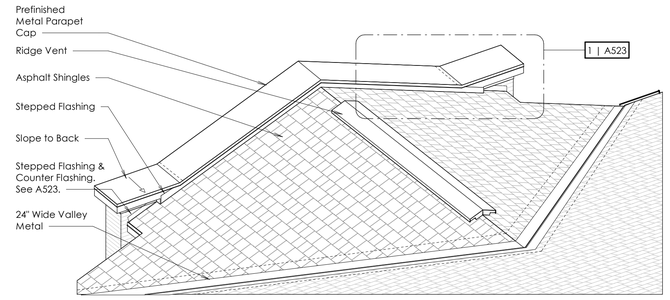

C Side Entry Parapet Flashing

Scale: 1/4" = 1'-0"

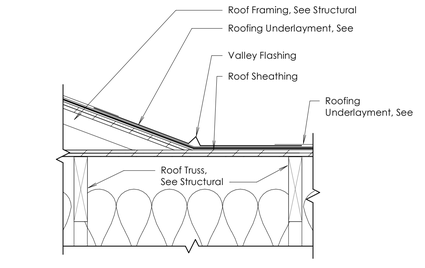

D Roof Valley Detail

Scale: 1 1/2" = 1'-0"

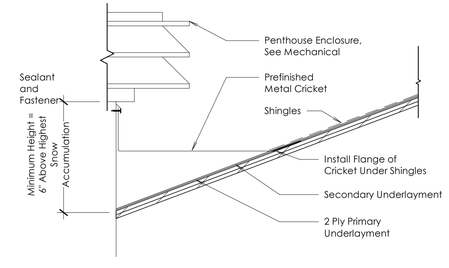

E Penthouse Detail

Scale: 1 1/2" = 1'-0"

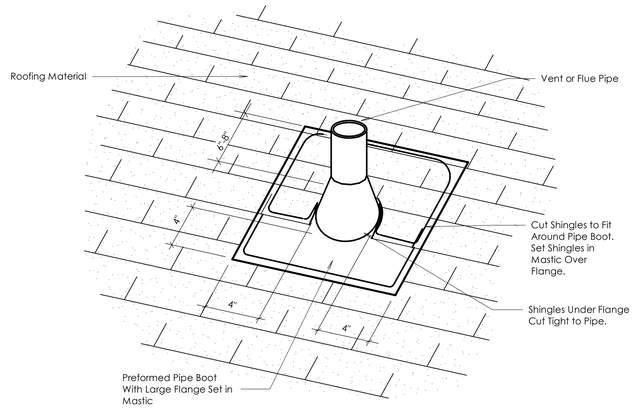

F Roof - Pipe Boot Flange Detail

Scale: 1/4" = 1'-0"

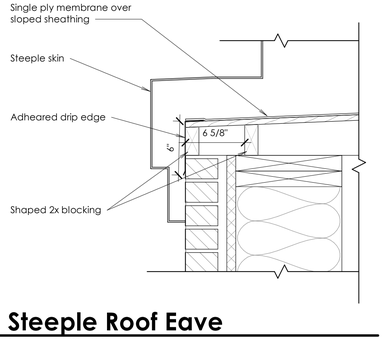

G Steeple Roof Eave

Scale: 1 1/2" = 1'-0"

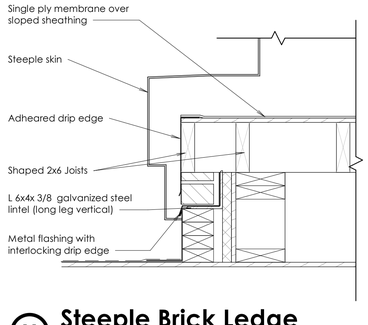

H Steeple Brick Ledge

Scale: 1 1/2" = 1'-0"

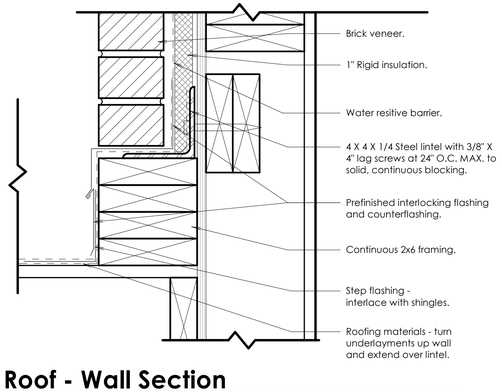

J Roof - Wall Section

Scale: 3" = 1'-0"

bhd ARCHITECTS
www.bhdarchitects.com
Phone 801.571.0010
Fax 801.571.0303
Toll Free 888.571.0010
65 East Wadsworth Park Drive
Suite 205 Draper, Utah 84020

LICENSED ARCHITECT Late Theodore Harris 6278-0301 STATE OF UTAH 23 MAY 2025

THE CHURCH OF JESUS CHRIST OF LATTER-DAY SAINTS

Nibley 6 & Nibley UT West Stake

Approx. 3410 South 1200 West, Nibley, Utah
41.670809, -111.860775

Owner #: 514-4728
Plan Series: Heritage 24
County Parcel: 03:050:0016
BHD #: 2403
Date: 29 May 2025

Drawing Issue and Revision Schedule

#	Date	Description

Roof Details

A521

5/29/2025 9:33:59 AM

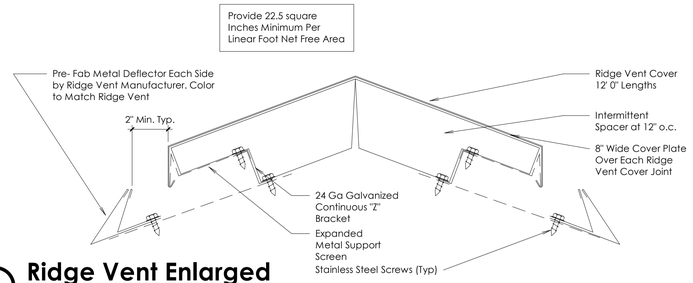

A Ridge Vent Enlarged

Scale: 3" = 1'-0"

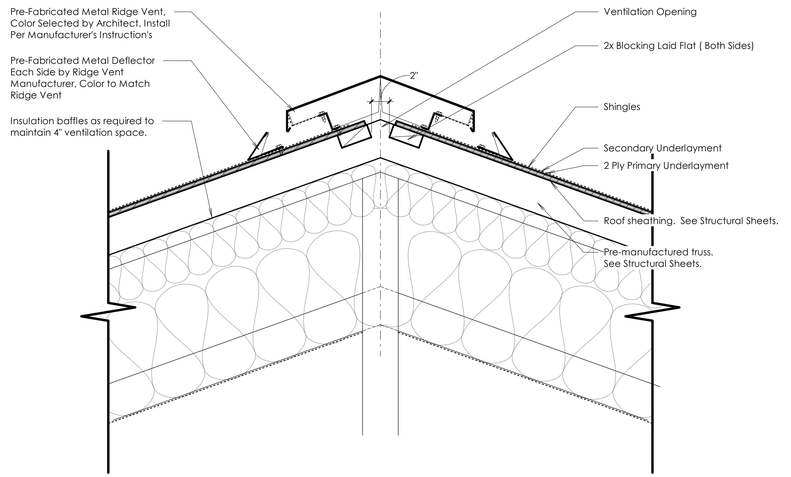

B Ridge Vent Section

Scale: 1 1/2" = 1'-0"

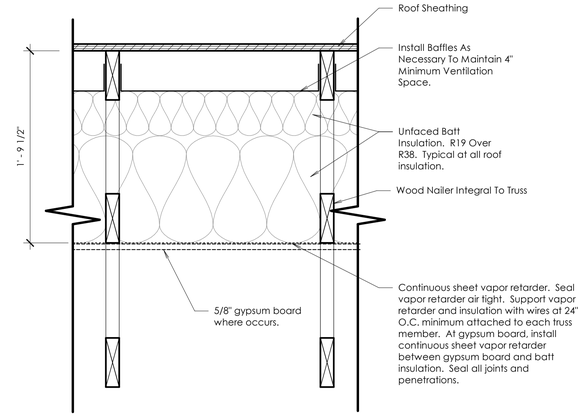

F Typical Insulation Detail

Scale: 1 1/2" = 1'-0"

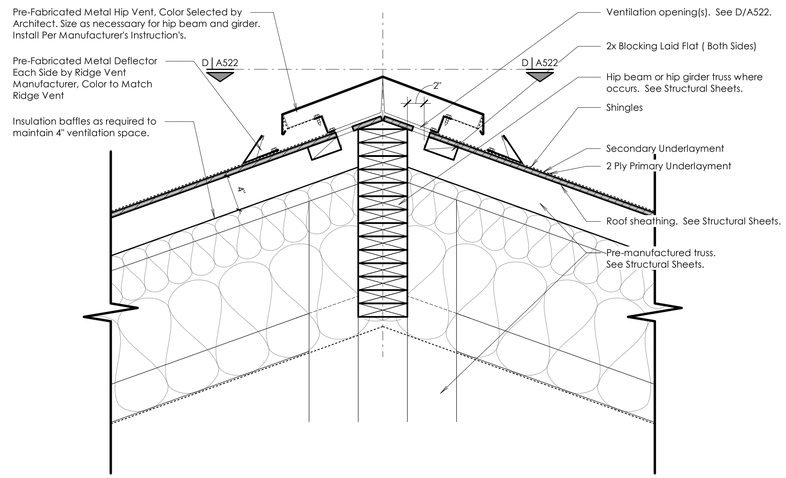

C Hip Vent Section

Scale: 1 1/2" = 1'-0"

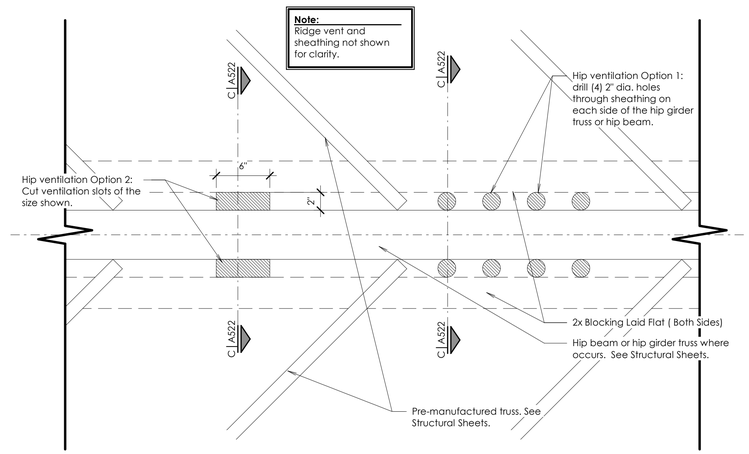

D Hip Vent Plan

Scale: 1 1/2" = 1'-0"

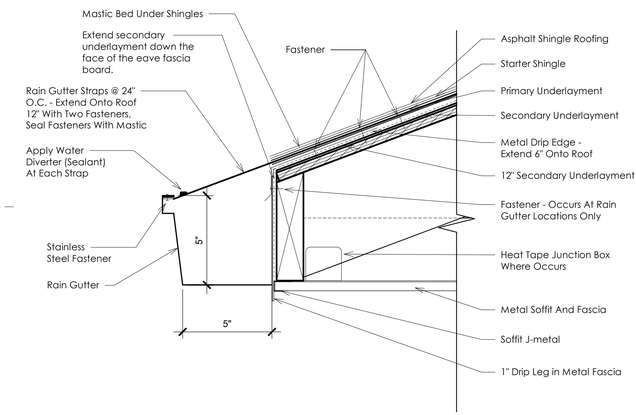

H Typical Gutter and Roofing Detail

Scale: 3" = 1'-0"

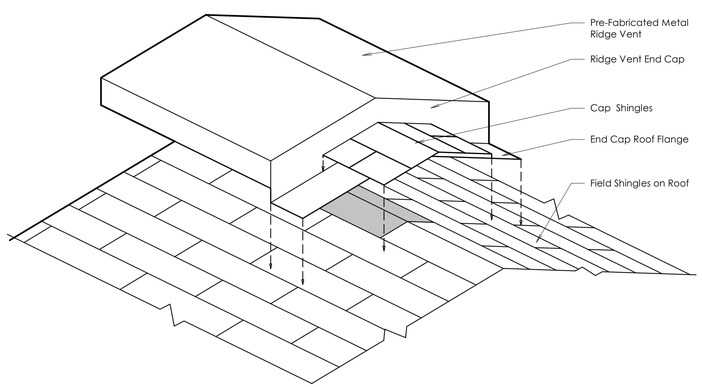

E Typical Ridge Vent End Detail

Scale: 1 1/2" = 1'-0"

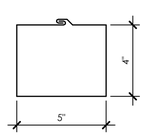

G Typical Downspout

Scale: 3" = 1'-0"

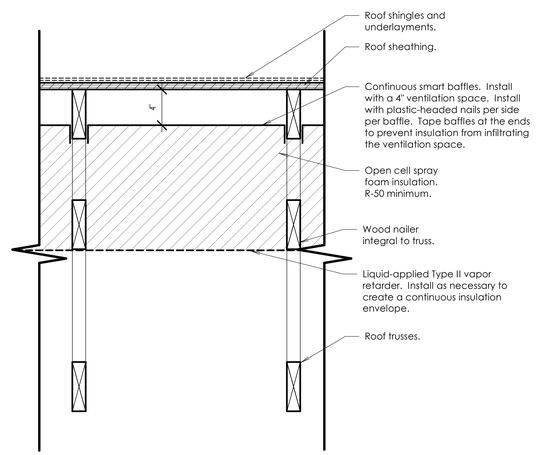

J Typical Insulation Detail Additive Alternate #1

Scale: 1 1/2" = 1'-0"

bhd ARCHITECTS
www.bhdarchitects.com
Phone 801.571.0010
Fax 801.571.0303
Toll Free 888.571.0010
65 East Wadsworth Park Drive
Suite 205 Draper, Utah 84020

LICENSED ARCHITECT Late Theodore Harris 23 MAY 2025 6278-0301 STATE OF UTAH

THE CHURCH OF JESUS CHRIST OF LATTER-DAY SAINTS

Nibley 6 & Nibley UT West Stake

Approx. 3410 South 1200 West, Nibley, Utah
41.672809 -111.860775

BHD #: 2403
County Parcel: 03:050:0016
Plan Series: Heritage 24
Owner #: 514-4728
Date: 29 May 2025

Drawing Issue and Revision Schedule

#	Date	Description

Roof Details

A522

5/29/2025 11:07:32 AM

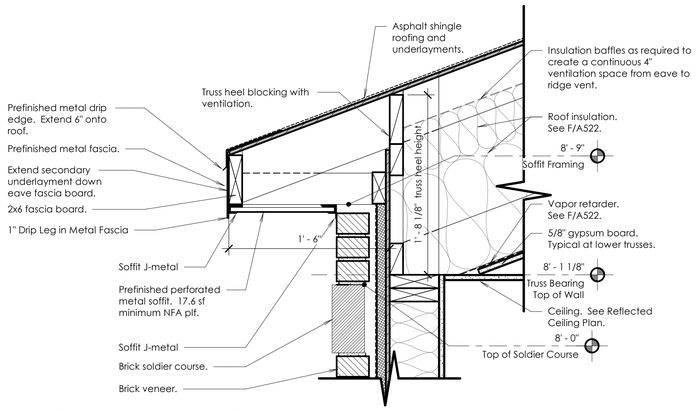

A Typical Eave Detail

Scale: 1 1/2" = 1'-0"

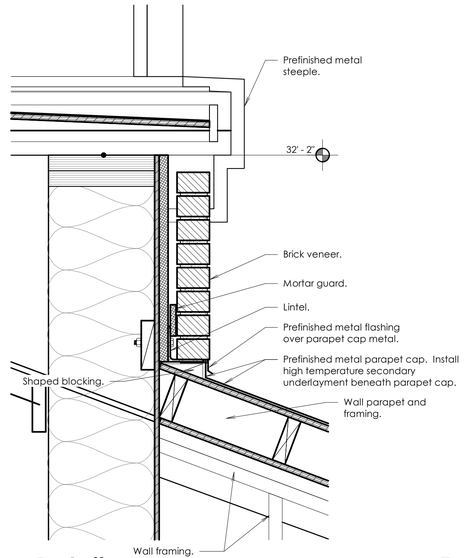

H Detail

Scale: 1 1/2" = 1'-0"

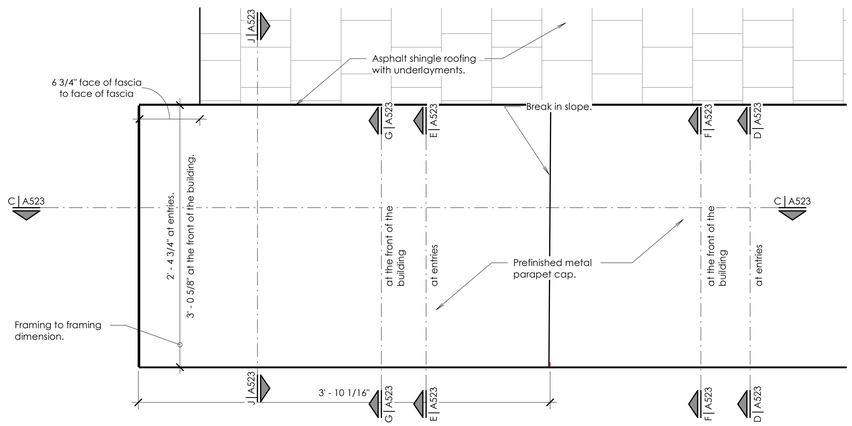

1 Enlarged Parapet Plan

Scale: 1 1/2" = 1'-0"

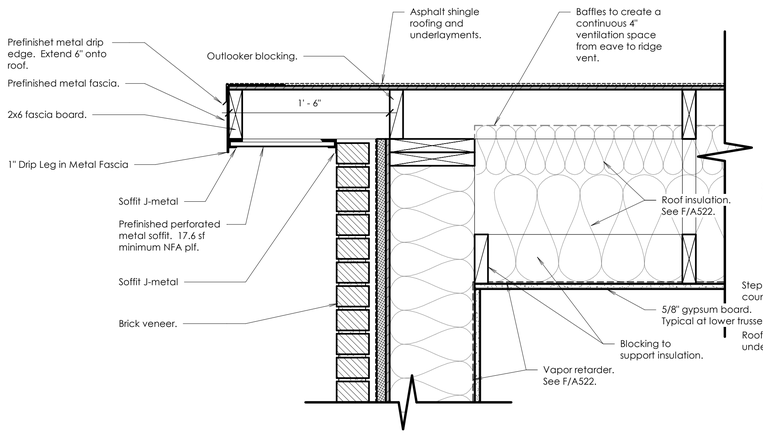

B Typical Rake Detail

Scale: 1 1/2" = 1'-0"

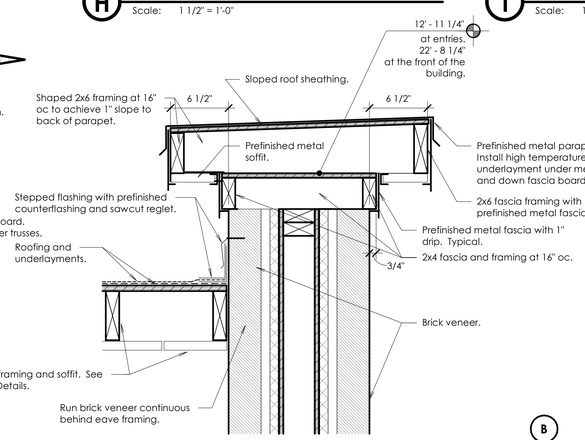

J Parapet Detail

Scale: 1 1/2" = 1'-0"

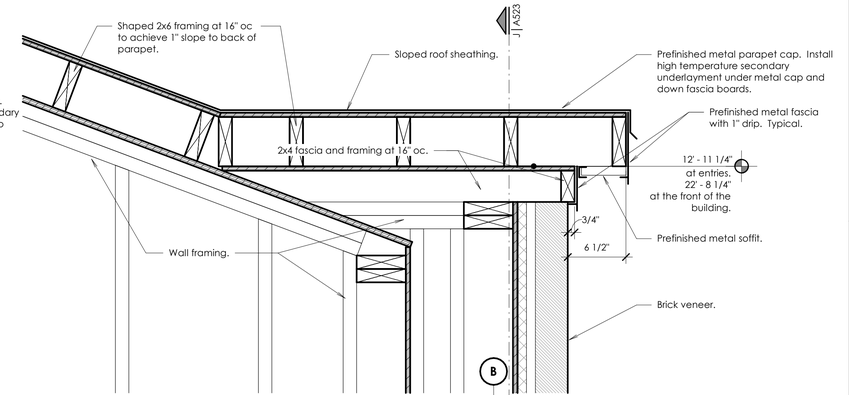

C Parapet Detail

Scale: 1 1/2" = 1'-0"

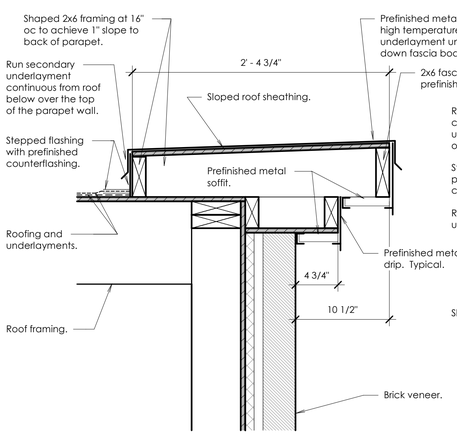

D Parapet Detail

Scale: 1 1/2" = 1'-0"

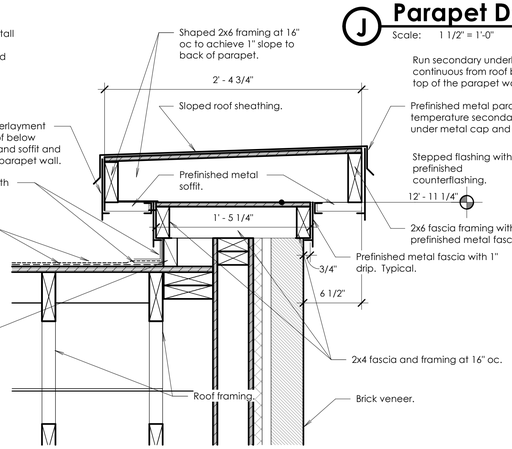

E Parapet Detail

Scale: 1 1/2" = 1'-0"

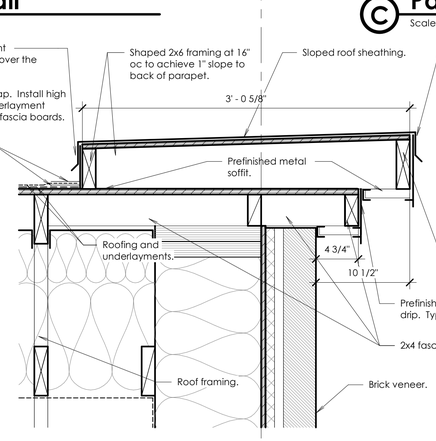

F Parapet Detail

Scale: 1 1/2" = 1'-0"

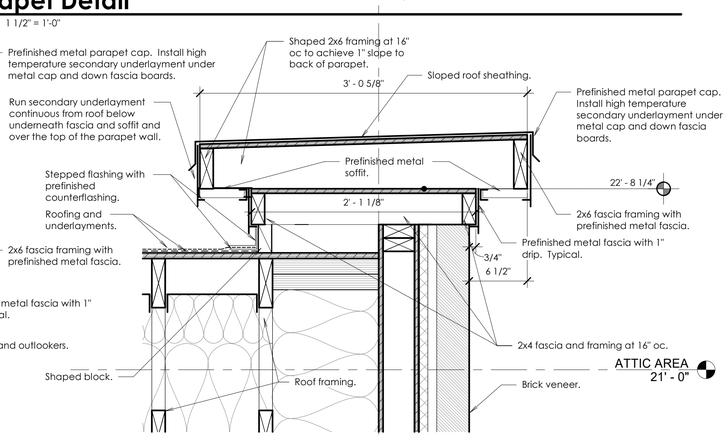

G Parapet Detail

Scale: 1 1/2" = 1'-0"

bhd ARCHITECTS
www.bhdarchitects.com
Phone 801.571.0010
Fax 801.571.0303
Toll Free 888.571.0010
65 East Wadsworth Park Drive
Suite 205 Draper, Utah 84020

LICENSED ARCHITECT Late Theodore Harris 163678-0301 STATE OF UTAH 23 MAY 2025

THE CHURCH OF JESUS CHRIST OF LATTER-DAY SAINTS

Nibley 6 & Nibley UT West Stake

Approx. 3410 South 1200 West, Nibley, Utah
41.670809, -111.840775

Owner #: 514-4728
Plan Series: Heritage 24
County Parcel: 03:050:0016
BHD #: 2403
Date: 29 May 2025

Drawing Issue and Revision Schedule

#	Date	Description

Roof Details

A523

5/29/2025 9:34:03 AM

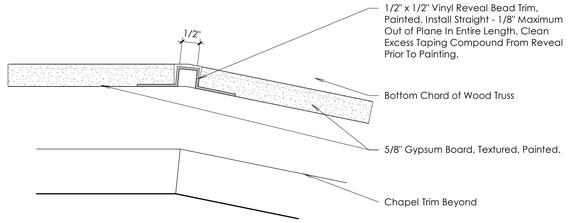

A Ceiling Drywall Reveal Detail

Scale: 6" = 1'-0"

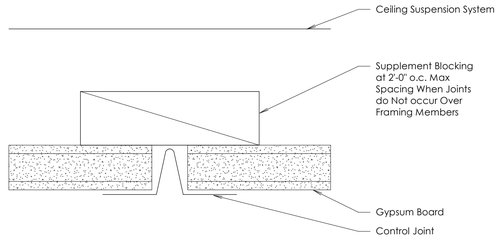

B Control Joint

Scale: 12" = 1'-0"

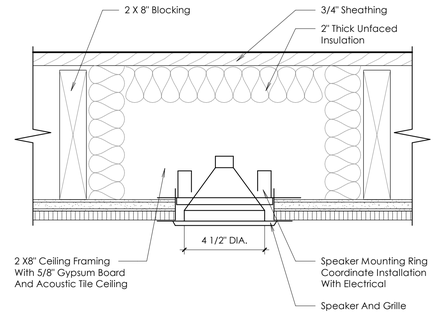

C 4" Speaker Enclosure Detail

Scale: 3" = 1'-0"

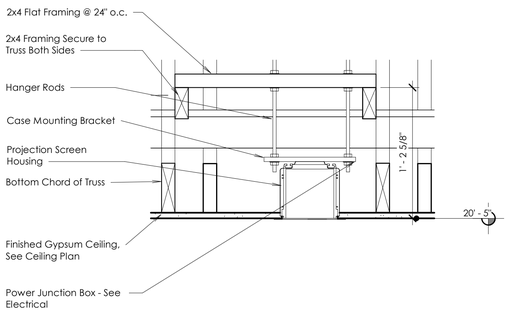

D Projection Screen Recess

Scale: 1 1/2" = 1'-0"

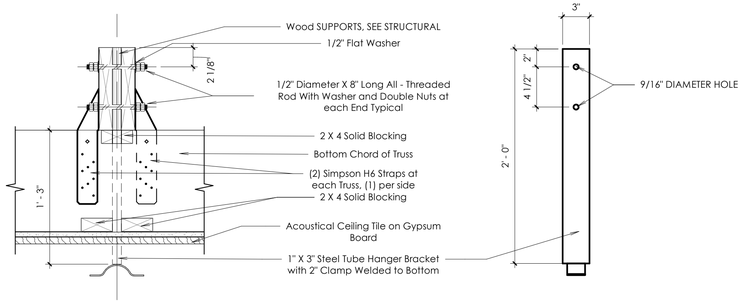

Note: Framed Text Denotes Items Furnished by Others and Installed by Contractor

E Basketball Standard Mounting

Scale: 1 1/2" = 1'-0"

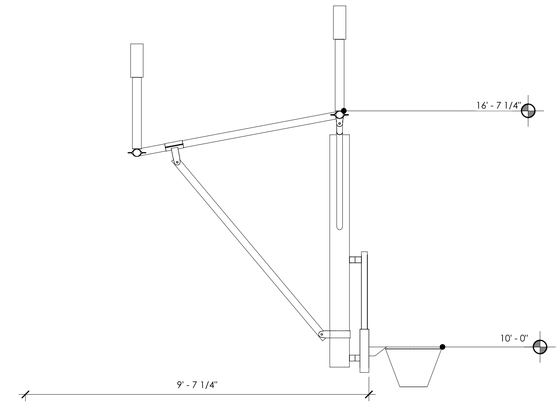

F Basketball Standard Mounting

Scale: 1/2" = 1'-0"

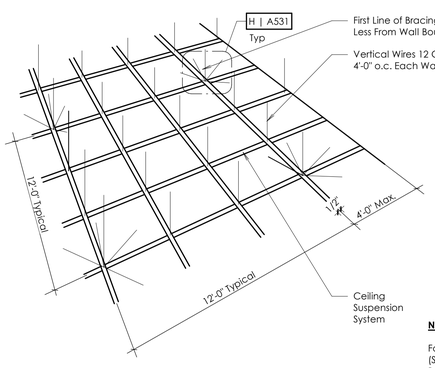

Notes:

1. Splay Wire Bracing and Compression Posts/Struts are Only Requited in Seismic Design Categories D, E, and F.
2. Areas Smaller Than 1,000 SF and with Walls on Four Sides Extending to the Structure Need Not Have Splay Wire Reinforcing. Boundary Walls Must Be Braced Top and Bottom Independent of Ceiling to Qualify.
3. Seismic Clip is Required in Seismic Design Categories D, E, AND F.
4. Use 7/8" Wall Moulding in Seismic Design Categories D, E, AND F. Attach Tees/Runners to Wall With Seismic Clips.

Note:

For Metal Acoustical Suspension Assemblies (Similar For Metal Suspension System: Gypsum Board)

G Ceiling Suspension Detail

Scale: 1 1/2" = 1'-0"

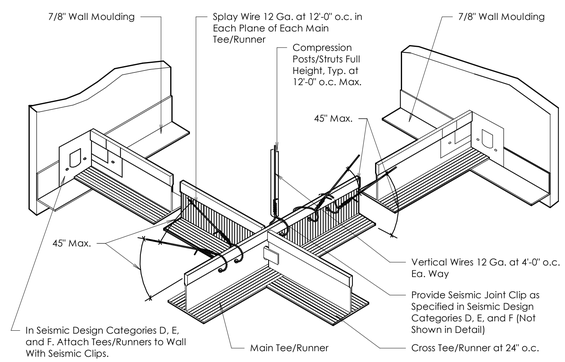

H Ceiling Suspension Detail

Scale: 1 1/2" = 1'-0"

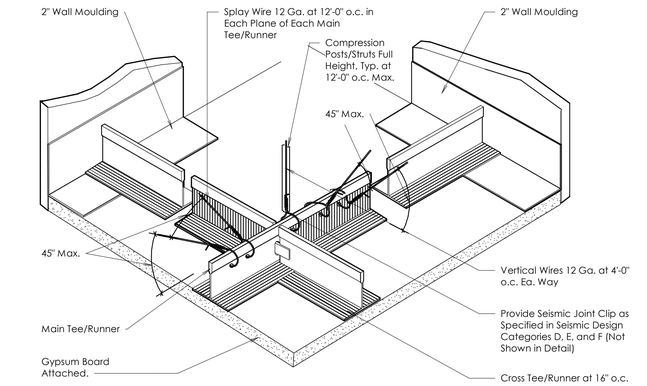

J Suspended Gypsum Ceiling Detail

Scale: 1 1/2" = 1'-0"

5/29/2025 9:34:04 AM

bhd ARCHITECTS
www.bhdarchitects.com
Phone 801.571.0010
Fax 801.571.0303
Toll Free 888.571.0010
65 East Wadsworth Park Drive
Suite 205 Draper, Utah 84020

LICENSED ARCHITECT Lafe Theodore Harris 6278-0301 STATE OF UTAH 29 MAY 2025

THE CHURCH OF JESUS CHRIST OF LATTER-DAY SAINTS

Nibley 6 & Nibley UT West Stake

Approx. 3410 South 1200 West, Nibley, Utah
41.670809 -111.860775

Date: 29 May 2025
BHD #: 2403
County Parcel: 03050C0016
Plan Series: Heritage 24
Owner #: 514-47/28

Drawing Issue and Revision Schedule

#	Date	Description

Ceiling Details

A531

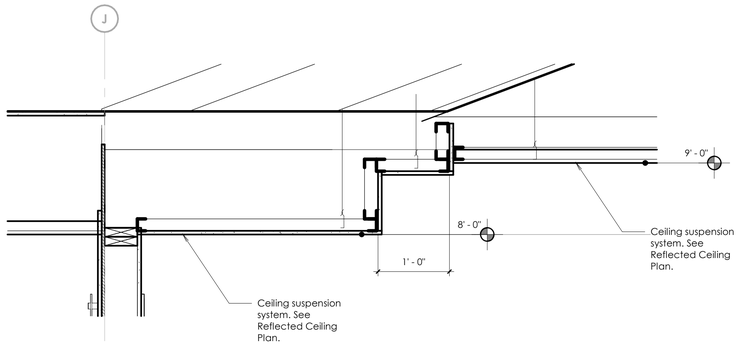

A Ceiling Detail
Scale: 1" = 1'-0"

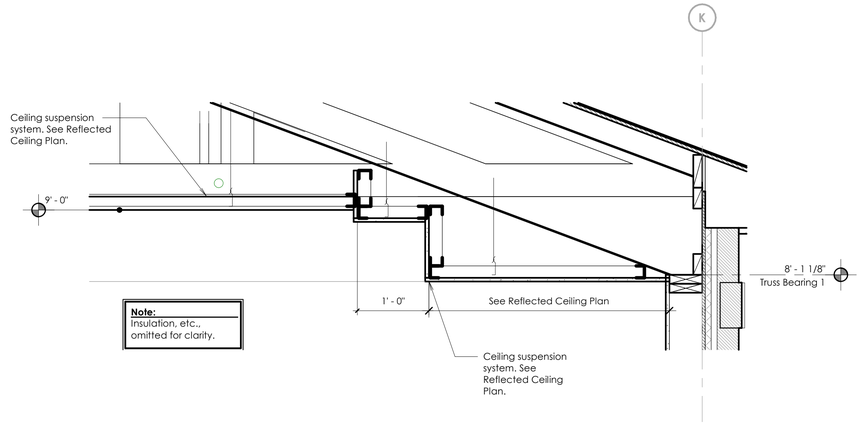

Note:
Insulation, etc., omitted for clarity.

B Ceiling Detail
Scale: 1" = 1'-0"

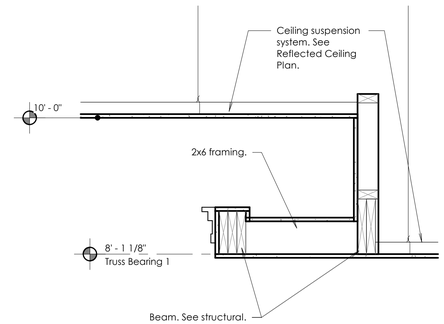

C Ceiling Detail
Scale: 1" = 1'-0"

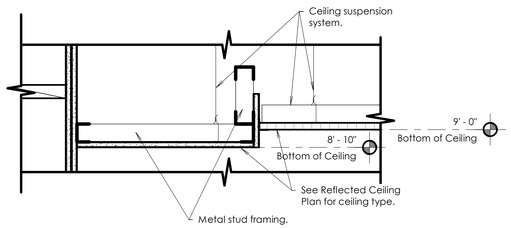

D Ceiling Detail
Scale: 1 1/2" = 1'-0"

bhd ARCHITECTS
www.bhdarchitects.com
Phone 801.571.0010
Fax 801.571.0303
Toll Free 888.571.0010
65 East Wadsworth Park Drive
Suite 205 Draper, Utah 84020

LICENSED ARCHITECT
Lafe Theodore Harris
6928898-0301
29 May 2025
STATE OF UTAH

THE CHURCH OF
JESUS CHRIST
OF LATTER-DAY SAINTS

Nibley 6 &
Nibley UT West Stake

Approx. 3410 South 1200 West, Nibley, Utah
41.670809, -111.860775

Date:	BHD #:	County Parcel:	Plan Series:	Owner #:
29 May 2025	2403	03:050:0016	Heritage 24	514-4728

Drawing Issue and Revision Schedule

#	Date	Description

Ceiling Step Details

A532

5/29/2025 9:34:05 AM

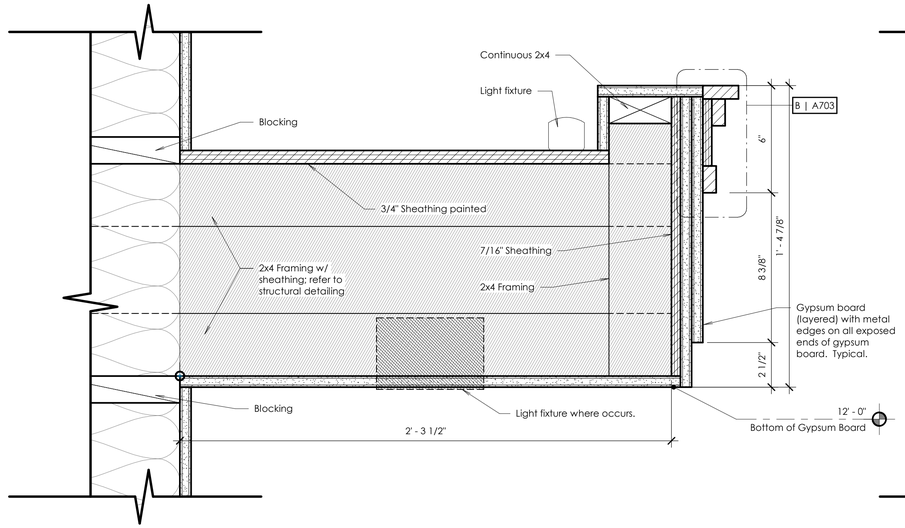

A Light Cove Trim Detail

Scale: 3" = 1'-0"

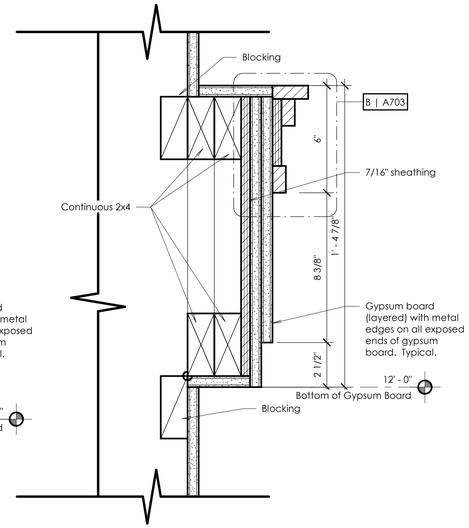

B Cove Trim Detail

Scale: 3" = 1'-0"

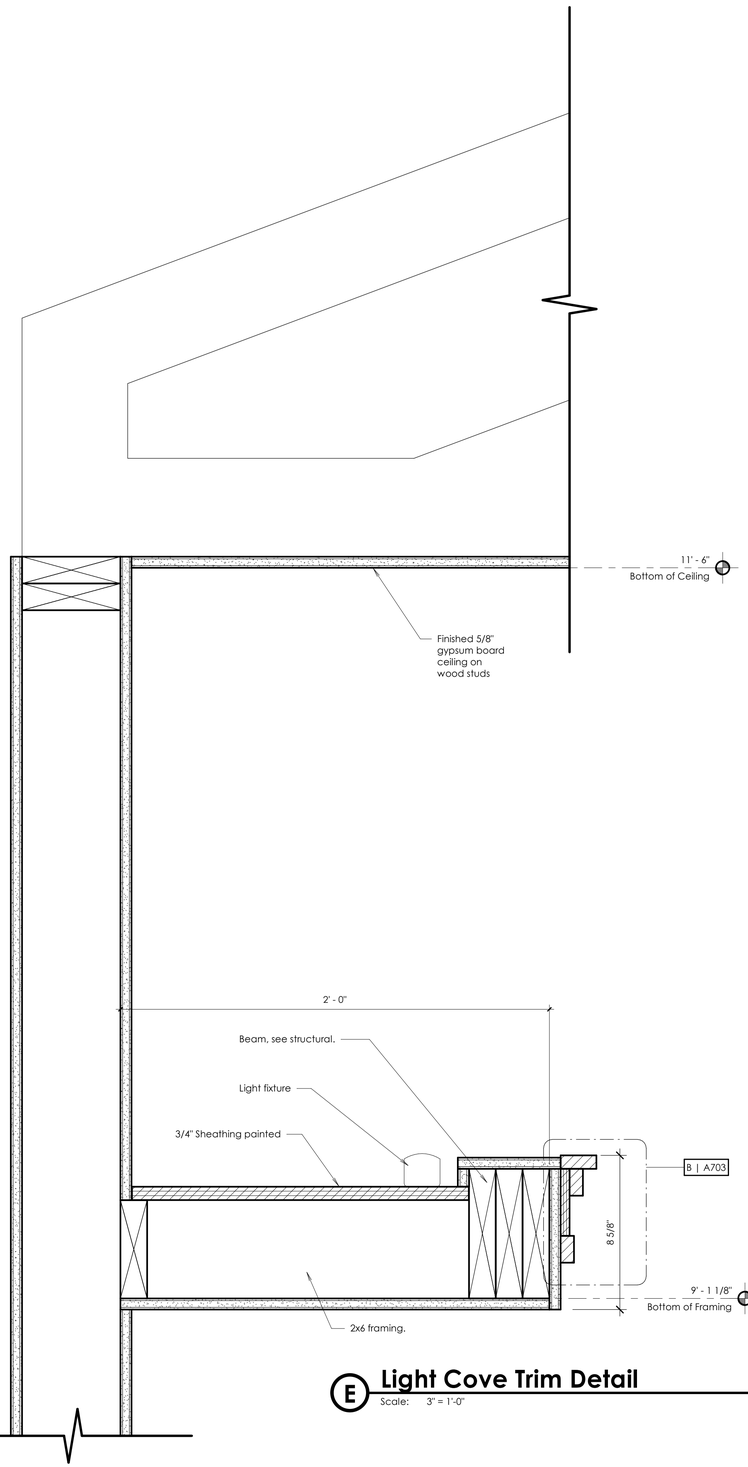

E Light Cove Trim Detail

Scale: 3" = 1'-0"

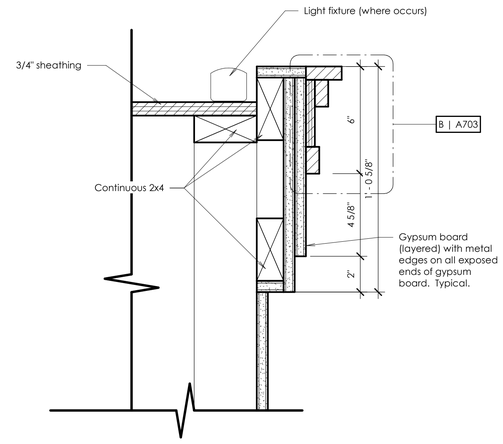

C Rostrum Feature Crown Trim

Scale: 3" = 1'-0"

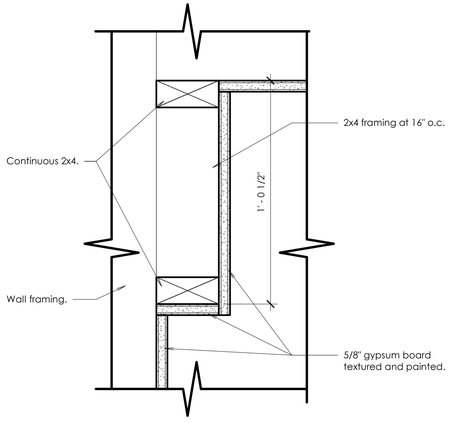

F Art Cove Head Detail

Scale: 3" = 1'-0"

5/29/2025 9:34:06 AM

bhd ARCHITECTS
www.bhdarchitects.com
Phone 801.571.0010
Fax 801.571.0303
Toll Free 888.571.0010
65 East Wadsworth Park Drive
Suite 205 Draper, Utah 84020

LICENSED ARCHITECT Lafe Theodore Harris 6278-0301 STATE OF UTAH 23 MAY 2025

THE CHURCH OF JESUS CHRIST OF LATTER-DAY SAINTS

Nibley 6 & Nibley UT West Stake

Approx. 3410 South 1200 West, Nibley, Utah
41.670809, -111.860775

BHD #: 2403
County Parcel: 03:050:0016
Plan Series: Heritage 24
Owner #: 514-4728
Date: 29 May 2025

Drawing Issue and Revision Schedule

#	Date	Description

Ceiling Details

A533

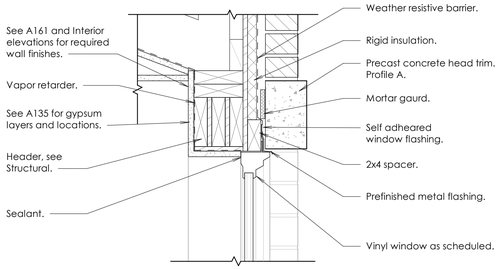

1 Window Head Type A

Scale: 1 1/2" = 1'-0"

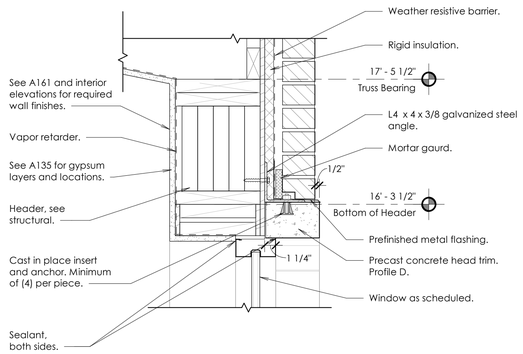

2 Window Head Type B

Scale: 1 1/2" = 1'-0"

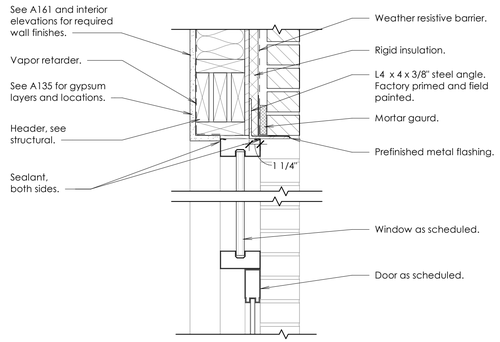

3 Window Head Type C

Scale: 1 1/2" = 1'-0"

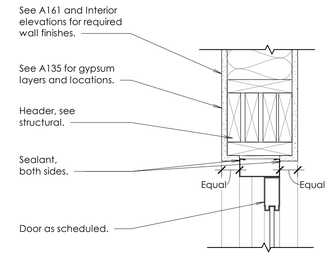

4 Window Head Type D

Scale: 1 1/2" = 1'-0"

5 Window Head Type E

Scale: 1 1/2" = 1'-0"

6 Window Head Type F

Scale: 1 1/2" = 1'-0"

7 Window Head Type G

Scale: 1 1/2" = 1'-0"

8 Window Head Type H

Scale: 1 1/2" = 1'-0"

9 Window Jamb Type A

Scale: 1 1/2" = 1'-0"

10 Window Jamb Type B

Scale: 1 1/2" = 1'-0"

11 Window Jamb Type C, E, and G

Scale: 1 1/2" = 1'-0"

12 Window Jamb Type D, F, and H

Scale: 1 1/2" = 1'-0"

5/29/2025 9:34:07 AM

bhd ARCHITECTS
www.bhdarchitects.com
Phone 801.571.0010
Fax 801.571.0303
Toll Free 888.571.0010
65 East Wadsworth Park Drive
Suite 205 Draper, Utah 84020

LICENSED ARCHITECT Lafe Theodore Harris 23 MAY 2025 6278-0301 STATE OF UTAH

THE CHURCH OF JESUS CHRIST OF LATTER-DAY SAINTS

Nibley 6 & Nibley UT West Stake

Approx. 3410 South 1200 West, Nibley, Utah
41.672809, -111.860775

BHD #: 2403
County Parcel: 03050:0016
Plan Series: Heritage 24
Owner #: 514-4728
Date: 29 May 2025

Drawing Issue and Revision Schedule

#	Date	Description

Window Details

A541

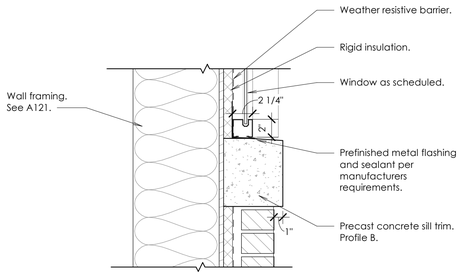

1 Window Sill Type J and K

Scale: 1 1/2" = 1'-0"

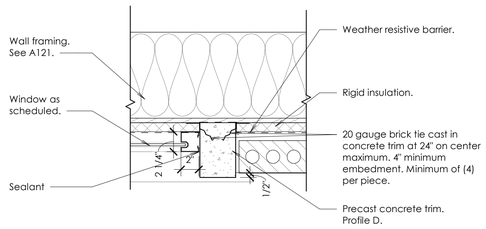

2 Window Jamb Type J and K

Scale: 1 1/2" = 1'-0"

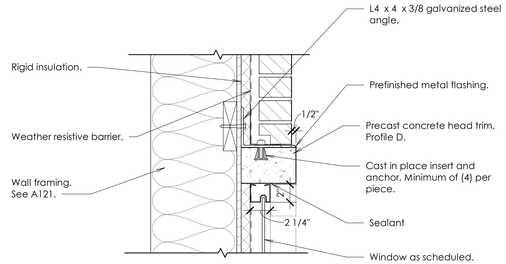

3 Window Head Type J and K

Scale: 1 1/2" = 1'-0"

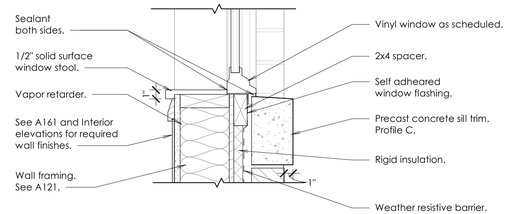

4 Window Sill Type A

Scale: 1 1/2" = 1'-0"

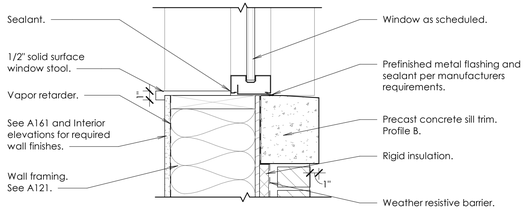

5 Window Sill Type B

Scale: 1 1/2" = 1'-0"

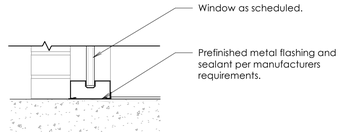

6 Storefront Sill Detail

Scale: 1 1/2" = 1'-0"

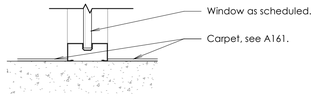

7 Storefront Sill Detail

Scale: 1 1/2" = 1'-0"

5/29/2025 9:34:07 AM

bhd ARCHITECTS
www.bhdarchitects.com
Phone 801.571.0010
Fax 801.571.0303
Toll Free 888.571.0010
65 East Wadsworth Park Drive
Suite 205 Draper, Utah 84020

LICENSED ARCHITECT
Lafe Theodore Harris
29 May 2025
6928898-0301
STATE OF UTAH

THE CHURCH OF
JESUS CHRIST
OF LATTER-DAY SAINTS

Nibley 6 &
Nibley UT West Stake

Approx. 3410 South 1200 West, Nibley, Utah
41.670809, -111.860775

Date:	BHD #:	County Parcel:	Plan Series:	Owner #:
29 May 2025	2403	03:050:0016	Heritage 24	514-4728

Drawing Issue and Revision Schedule

#	Date	Description

Window Details

A542

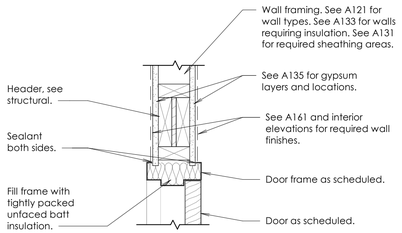

A Door Head 1
Scale: 1 1/2" = 1'-0"

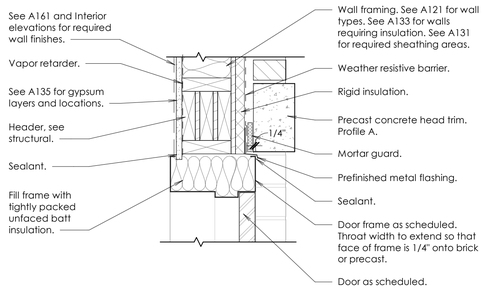

B Door Head 2
Scale: 1 1/2" = 1'-0"

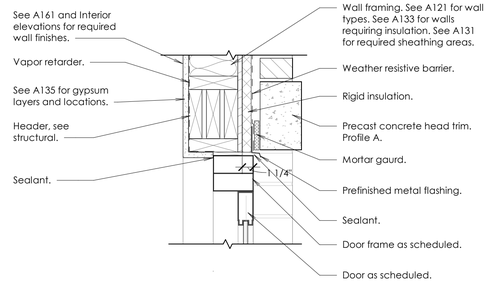

C Door Head 3
Scale: 1 1/2" = 1'-0"

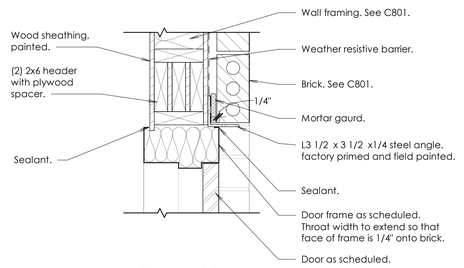

D Door Head 4
Scale: 1 1/2" = 1'-0"

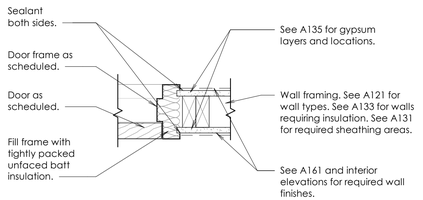

E Door Jamb 1
Scale: 1 1/2" = 1'-0"

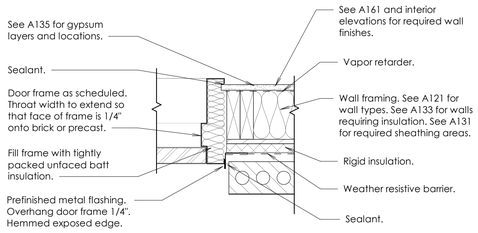

F Door Jamb 2
Scale: 1 1/2" = 1'-0"

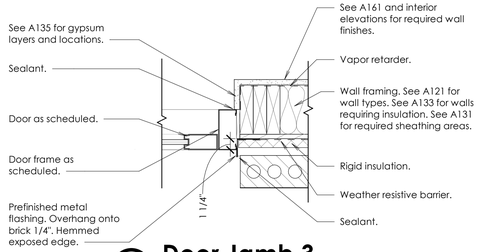

G Door Jamb 3
Scale: 1 1/2" = 1'-0"

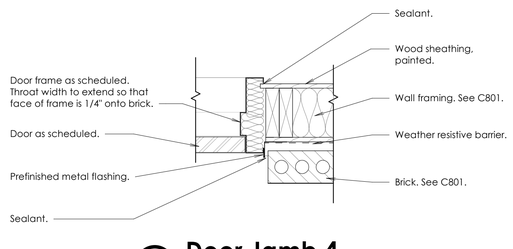

H Door Jamb 4
Scale: 1 1/2" = 1'-0"

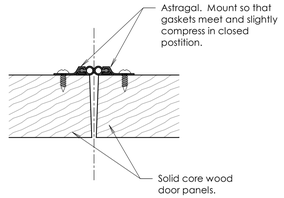

J Astragal Detail
Scale: 6" = 1'-0"

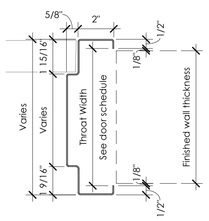

1 Typical Hollow Metal Frame Profile
Scale: 3" = 1'-0"

5/29/2025 9:34:08 AM

bhd ARCHITECTS
www.bhdarchitects.com
Phone 801.571.0010
Fax 801.571.0303
Toll Free 888.571.0010
65 East Wadsworth Park Drive
Suite 205 Draper, Utah 84020

LICENSED ARCHITECT Lafe Theodore Harris 23 MAY 2025 6276578-0301 STATE OF UTAH

THE CHURCH OF JESUS CHRIST OF LATTER-DAY SAINTS

Nibley 6 &
Nibley UT West Stake

Approx. 3410 South 1200 West Nibley, Utah
41.670809, -111.866775

Date: 29 May 2025
BHD #: 2403
County Parcel: 03050,0016
Plan Series: Heritage 24
Owner #: 514-4728

Drawing Issue and Revision Schedule

#	Date	Description

Door Details

A543

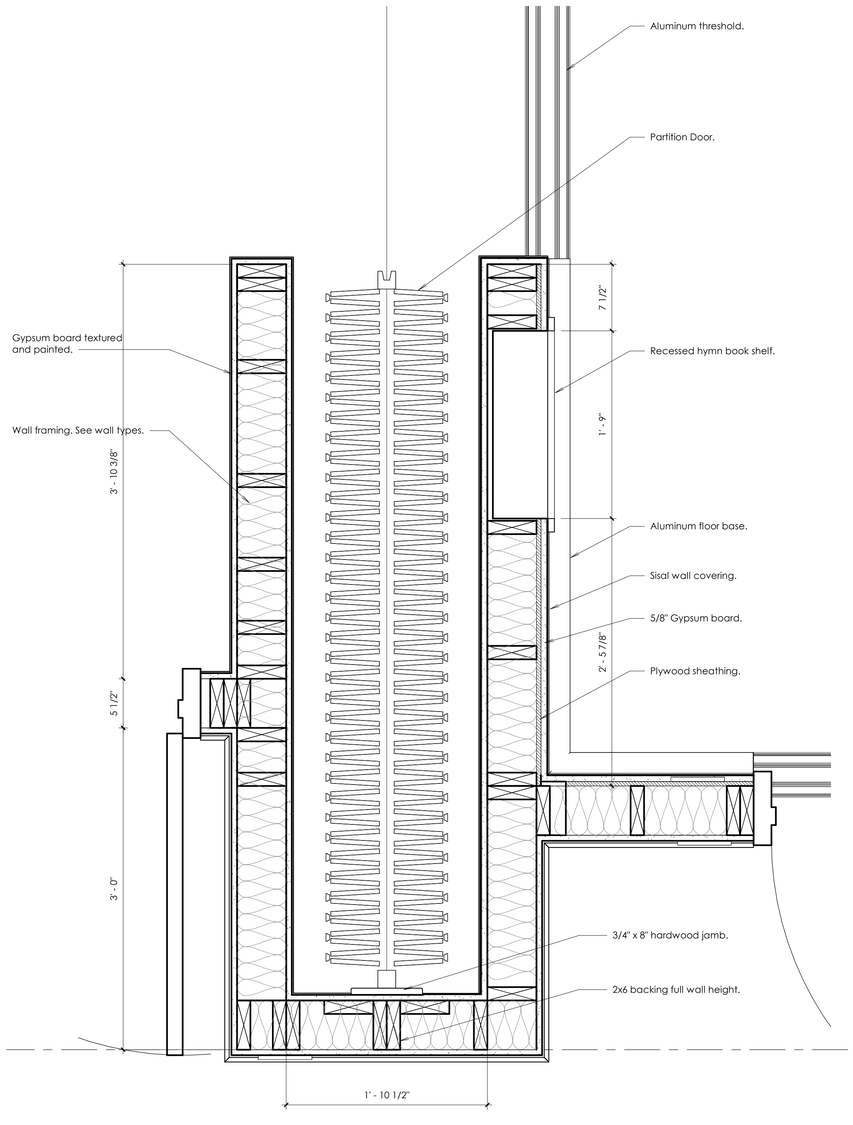

A Partition Jamb Detail

Scale: 1 1/2" = 1'-0"

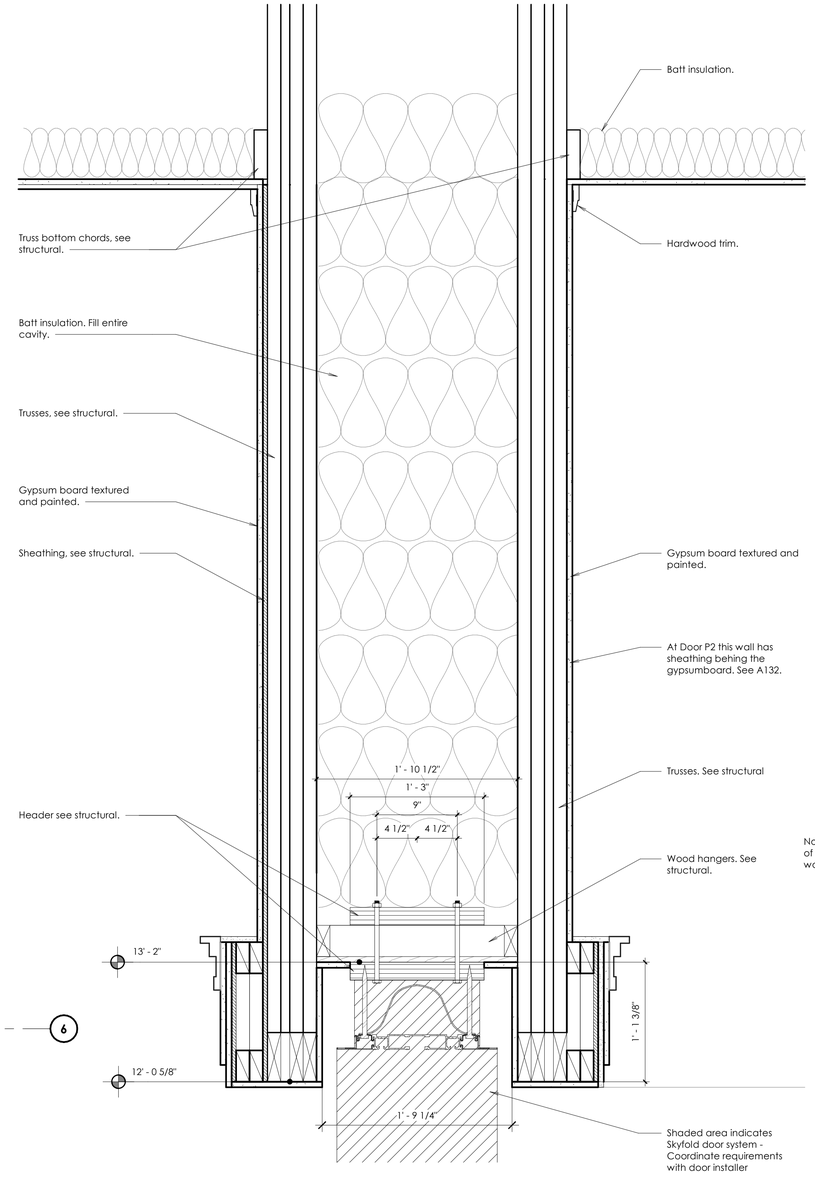

B Partition Head Detail

Scale: 1 1/2" = 1'-0"

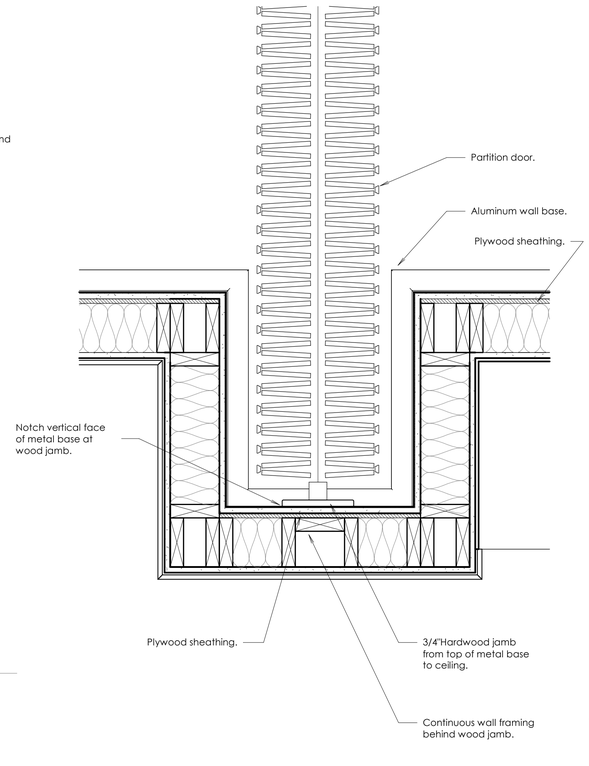

C Partition Jamb Detail

Scale: 1 1/2" = 1'-0"

5/29/2025 9:34:09 AM

bhd ARCHITECTS
www.bhdarchitects.com
Phone 801.571.0010
Fax 801.571.0303
Toll Free 888.571.0010
65 East Wadsworth Park Drive
Suite 205 Draper, Utah 84020

LICENSED ARCHITECT Late Theodore Harris 23 MAY 2025 6276578-0301 STATE OF UTAH

THE CHURCH OF JESUS CHRIST OF LATTER-DAY SAINTS

Nibley 6 & Nibley UT West Stake

Approx. 3410 South 1200 West, Nibley, Utah
41.670809, -111.860775

BHD #: 2403
County Parcel: 03:050:0016
Plan Series: Heritage 24
Owner #: 514-4728
Date: 29 May 2025

Drawing Issue and Revision Schedule

#	Date	Description

Door Details

A544

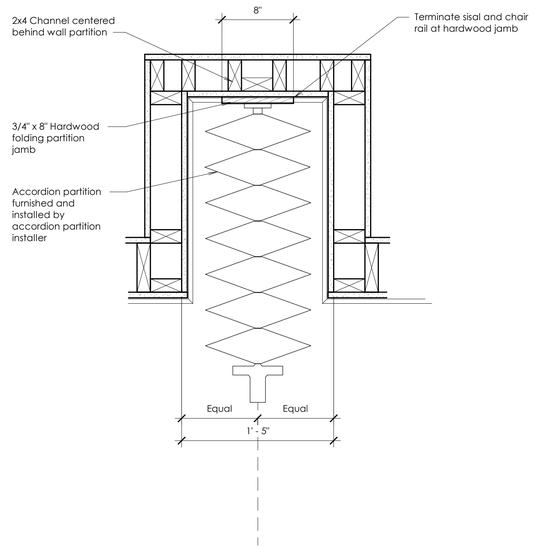

D Accordion Partition Jamb at Pocket

Scale: 1 1/2" = 1'-0"

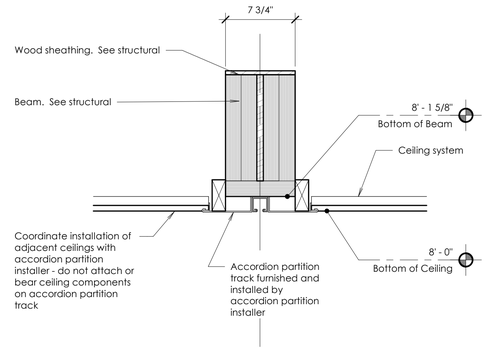

E Accordion Partition Head Detail

Scale: 1 1/2" = 1'-0"

bhd ARCHITECTS
www.bhdarchitects.com
Phone 801.571.0010
Fax 801.571.0303
Toll Free 888.571.0010
65 East Wadsworth Park Drive
Suite 205 Draper, Utah 84020

LICENSED ARCHITECT
Late Theodore Harris
6278378-0301
23 MAY 2025
STATE OF UTAH

THE CHURCH OF JESUS CHRIST OF LATTER-DAY SAINTS

Nibley 6 &
Nibley UT West Stake

Approx. 3410 South 1200 West Nibley, Utah
41.670809, -111.866775

BHD #: 2403
County Parcel: 03050:0016
Plan Series: Heritage 24
Owner #: 514-4728

Date: 29 May 2025

Drawing Issue and Revision Schedule

#	Date	Description

Door Details

A545

5/29/2025 9:34:10 AM

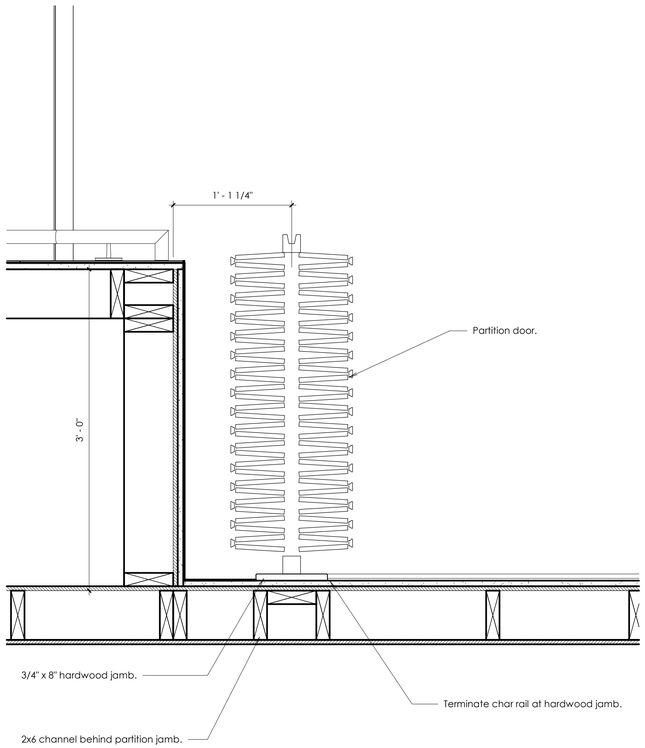

A Partition Jamb

Scale: 1 1/2" = 1'-0"

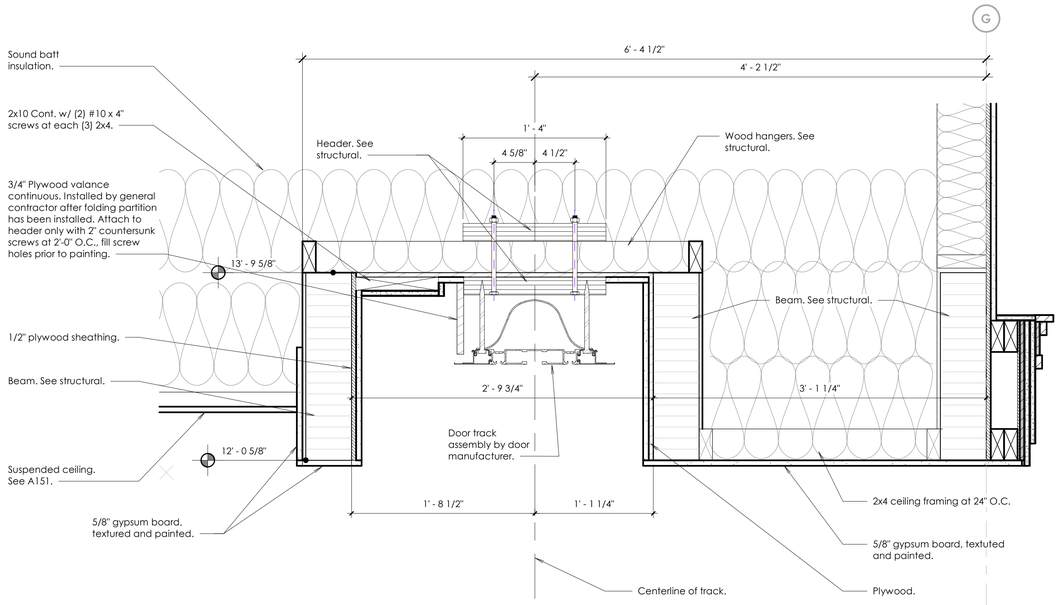

B Partition Header Detail

Scale: 1 1/2" = 1'-0"

bhd ARCHITECTS
www.bhdarchitects.com
Phone 801.571.0010
Fax 801.571.0303
Toll Free 888.571.0010
65 East Wadsworth Park Drive
Suite 205 Draper, Utah 84020

LICENSED ARCHITECT
Lafe Theodore Harris
Date 29 May 2025
6978-0301
STATE OF UTAH

THE CHURCH OF JESUS CHRIST OF LATTER-DAY SAINTS

Nibley 6 & Nibley UT West Stake

Approx. 3410 South 1200 West, Nibley, Utah
41.670809, -111.860775

Date:	BHD #:	County Parcel:	Plan Series:	Owner #:
29 May 2025	2403	03:050:0016	Heritage 24	514-4728

Drawing Issue and Revision Schedule

#	Date	Description

Door Details

A546

5/29/2025 10:10:12 AM

Note:
Provide All described fasteners

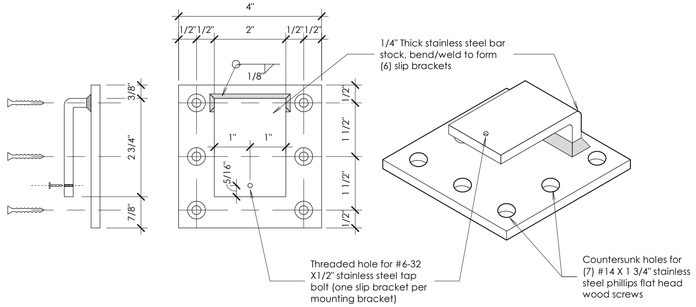

A Slip Bracket
Scale: 6" = 1'-0"

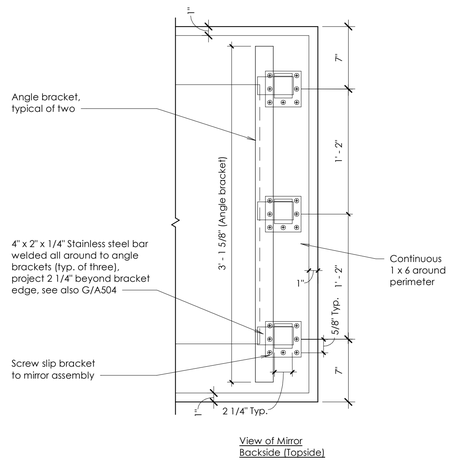

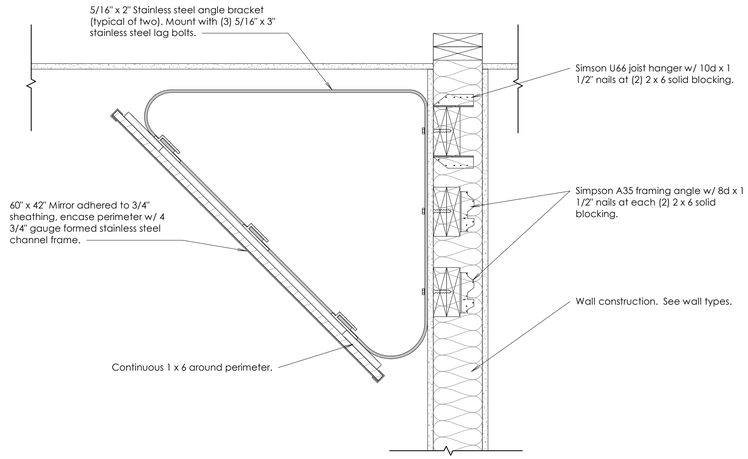

B Font Viewing Mirror
Scale: 1 1/2" = 1'-0"

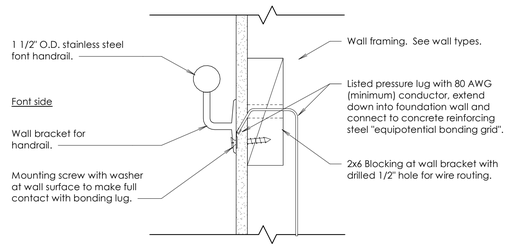

C Font Handrail Bracket
Scale: 3" = 1'-0"

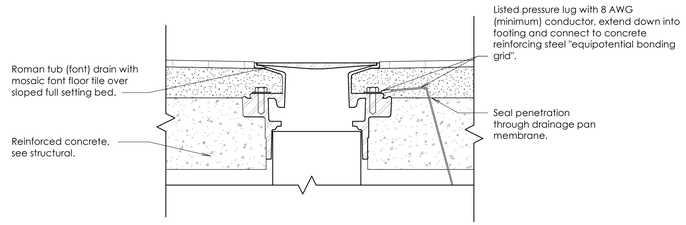

D Font Drain
Scale: 3" = 1'-0"

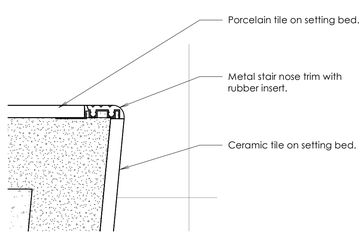

3 Font Stair Nose
Scale: 6" = 1'-0"

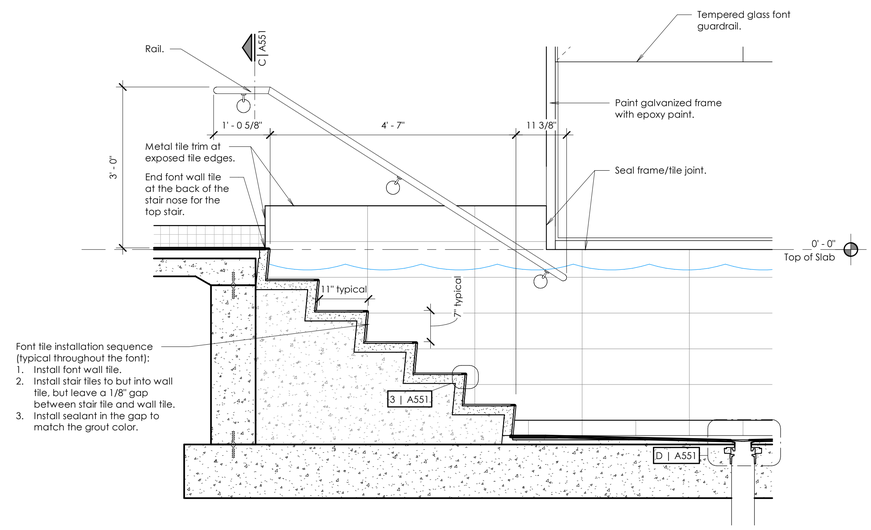

2 Font Section
Scale: 3/4" = 1'-0"

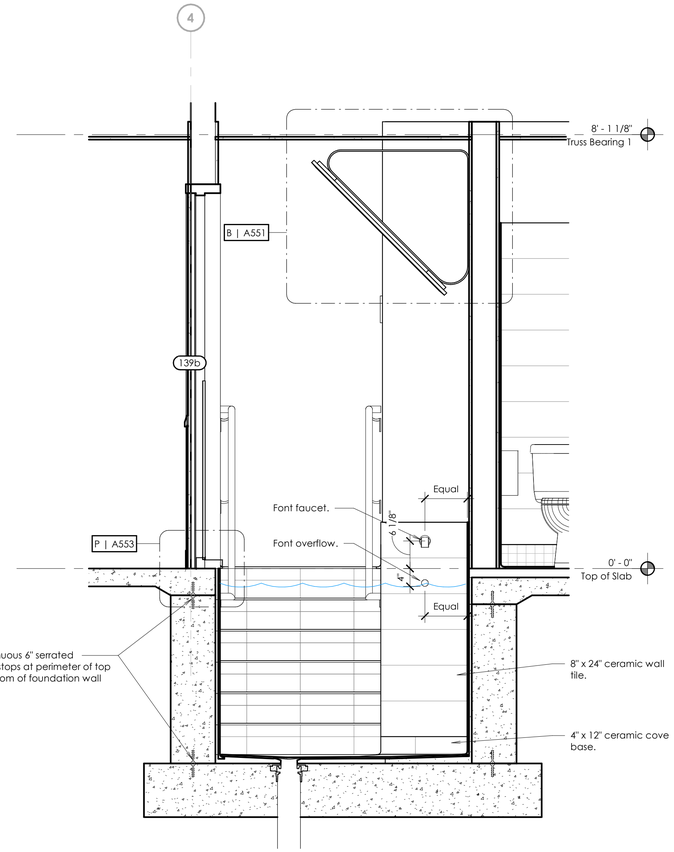

1 Font Section
Scale: 3/4" = 1'-0"

5/29/2025 9:34:12 AM

bhd ARCHITECTS
www.bhdarchitects.com
Phone 801.571.0010
Fax 801.571.0303
Toll Free 888.571.0010
65 East Wadsworth Park Drive
Suite 205 Draper, Utah 84020

LICENSED ARCHITECT
Lafe Theodore Harris
29 May 2025
STATE OF UTAH

THE CHURCH OF
JESUS CHRIST
OF LATTER-DAY SAINTS

Nibley 6 &
Nibley UT West Stake

Approx. 3410 South 1200 West, Nibley, Utah
41.670809, -111.860775

Date:	BHD #:	County Parcel:	Plan Series:	Owner #:
29 May 2025	2403	03:050:0016	Heritage 24	514-4728

Drawing Issue and Revision Schedule

#	Date	Description

Font Details

A551

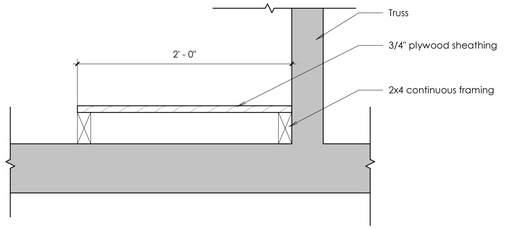

A Catwalk Detail

Scale: 1 1/2" = 1'-0"

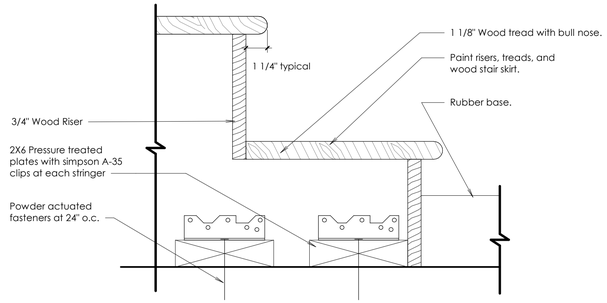

C Stair Base at Concrete Floor

Scale: 3" = 1'-0"

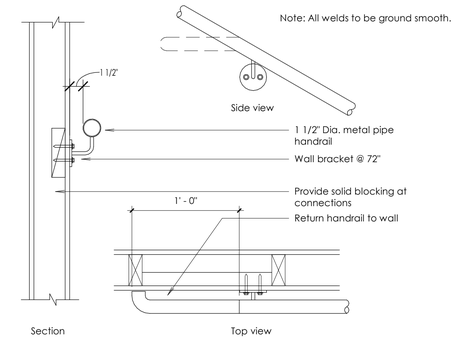

D Handrail - Metal Pipe Section

Scale: 1 1/2" = 1'-0"

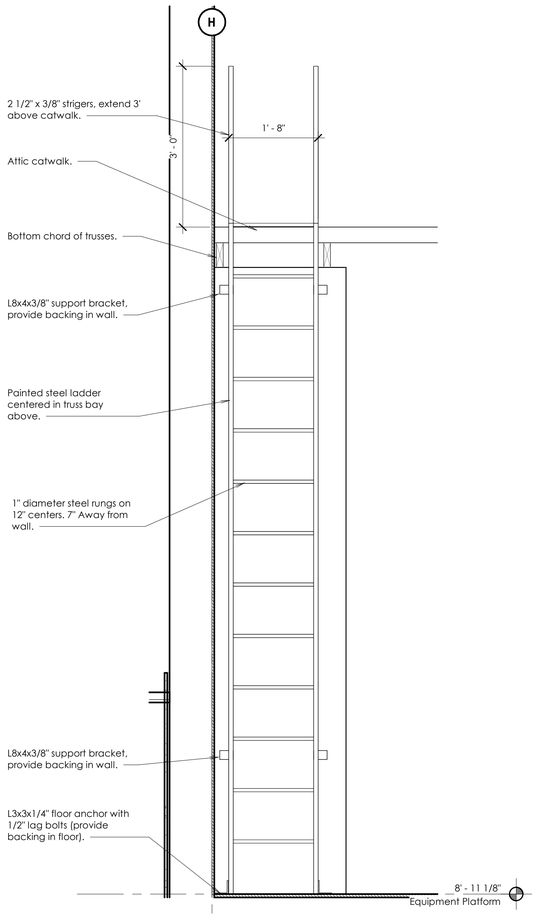

E Attic Access Ladder

Scale: 3/4" = 1'-0"

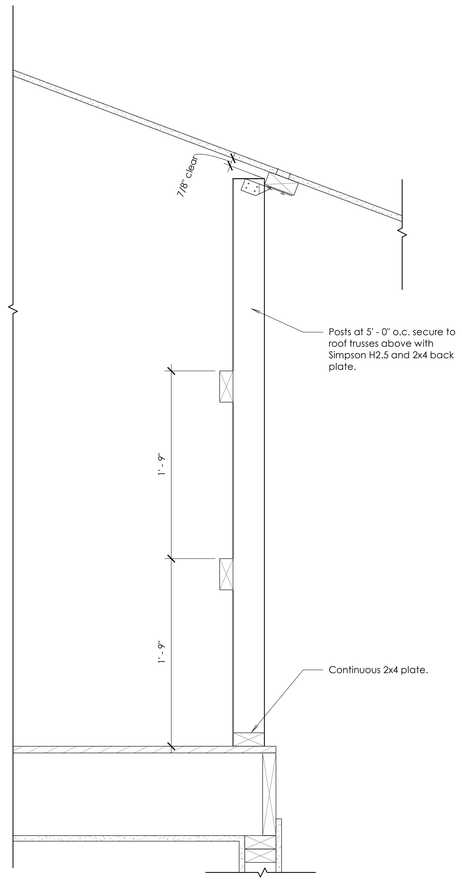

F Equipment Platform Guardrail Detail

Scale: 1 1/2" = 1'-0"

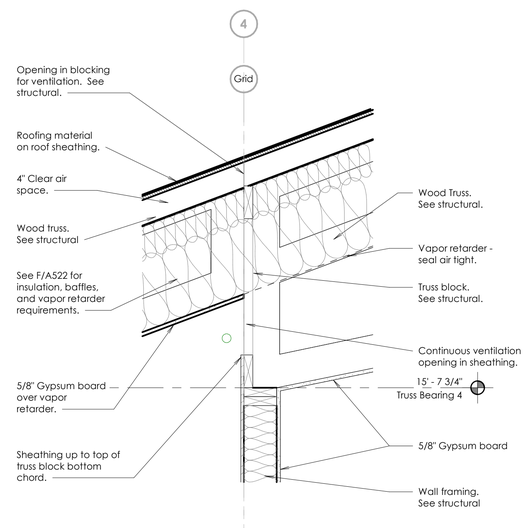

G Attic Ventilation Detail

Scale: 1" = 1'-0"

bhd ARCHITECTS
www.bhdarchitects.com
Phone 801.571.0010
Fax 801.571.0303
Toll Free 888.571.0010
65 East Wadsworth Park Drive
Suite 205 Draper, Utah 84020

LICENSED ARCHITECT
Lafe Theodore Harris
6278-0301
23 MAY 2025
STATE OF UTAH

THE CHURCH OF JESUS CHRIST OF LATTER-DAY SAINTS

Nibley 6 & Nibley UT West Stake

Approx. 3410 South 1200 West, Nibley, Utah
41.670809, -111.860775

Date: 29 May 2025
BHD #: 2403
County Parcel: 03050C0016
Plan Series: Heritage 24
Owner #: 514-4728

Drawing Issue and Revision Schedule

#	Date	Description

Equipment Platform and Attic Details

A552

5/29/2025 9:34:13 AM

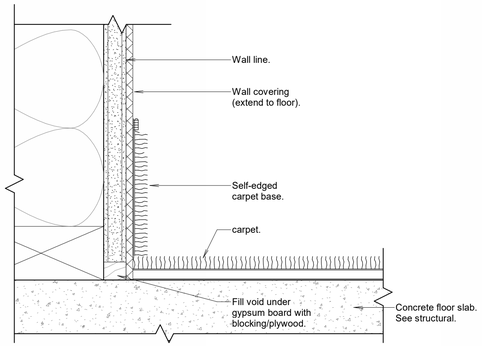

A Carpet Base Detail

Scale: 6" = 1'-0"

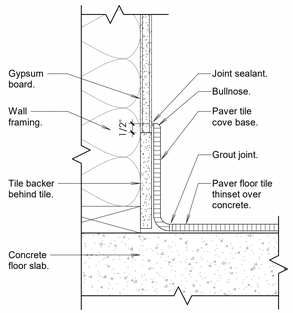

B Paver Tile Coved Base Thinset

Scale: 3" = 1'-0"

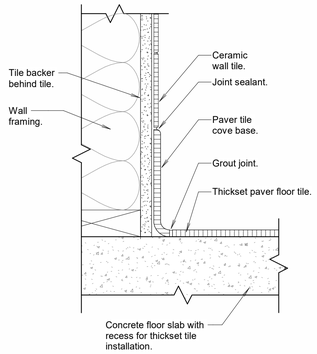

C Paver Tile Coved Base at Full Setting Bed

Scale: 3" = 1'-0"

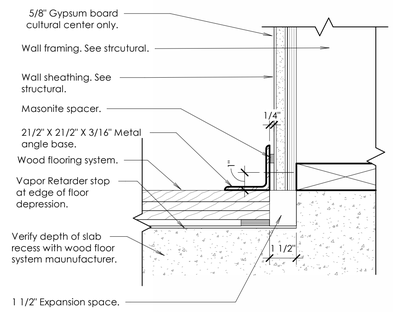

D Metal Base Detail

Scale: 3" = 1'-0"

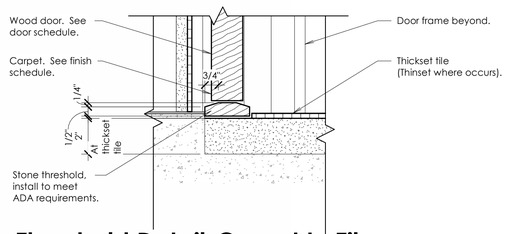

E Threshold Detail-Carpet to Tile

Scale: 3" = 1'-0"

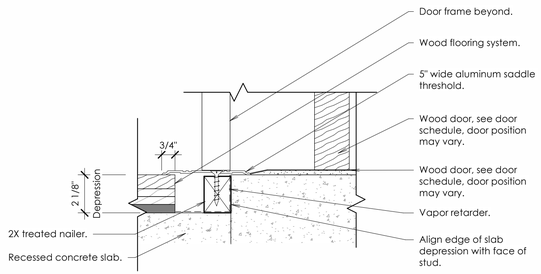

F Threshold Detail-Carpet to Wood

Scale: 3" = 1'-0"

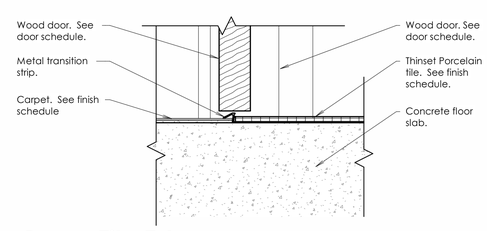

G Paver Tile Edge

Scale: 3" = 1'-0"

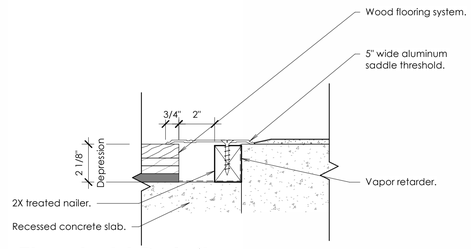

H Threshold Detail

Scale: 3" = 1'-0"

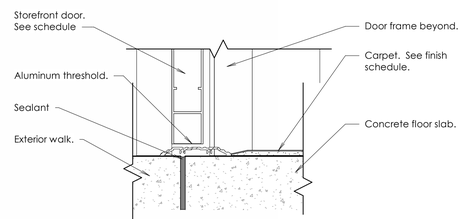

J Exterior Storefront Entry Threshold

Scale: 3" = 1'-0"

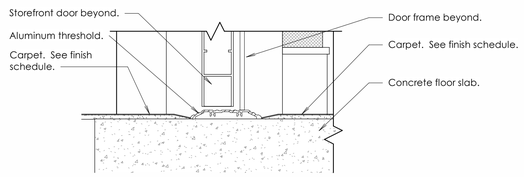

K Interior Storefront Threshold

Scale: 3" = 1'-0"

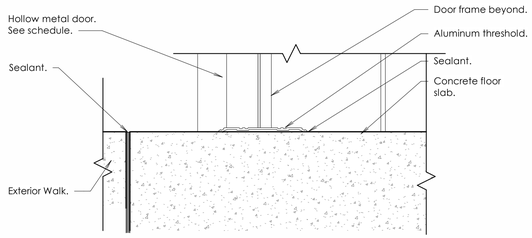

L Hollow Metal Door Threshold

Scale: 3" = 1'-0"

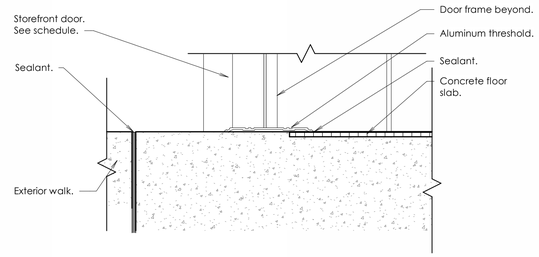

M Storefront Threshold-Tile to Exterior

Scale: 3" = 1'-0"

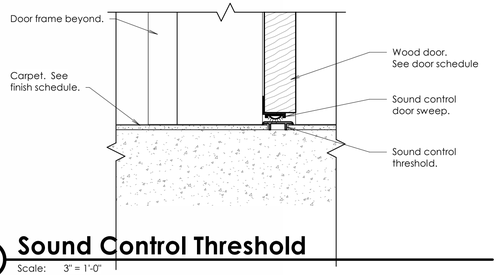

N Sound Control Threshold

Scale: 3" = 1'-0"

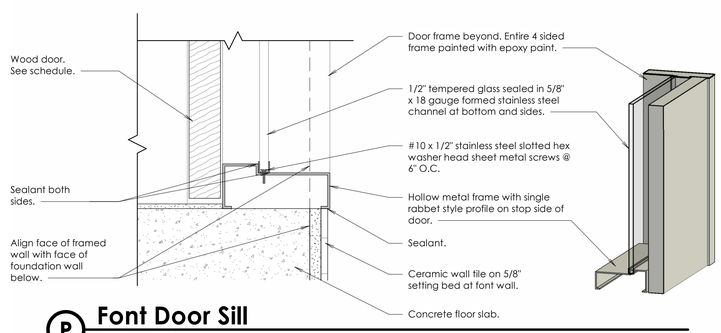

P Font Door Sill

Scale: 3" = 1'-0"

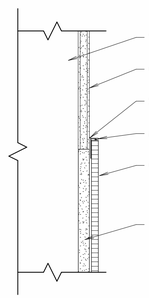

Q Wall Tile Edge

Scale: 3" = 1'-0"

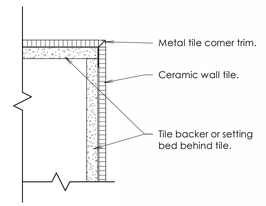

R Wall Tile Outside Corner

Scale: 3" = 1'-0"

5/29/2025 9:34:24 AM

bhd ARCHITECTS
www.bhdarchitects.com
Phone 801.571.0010
Fax 801.571.0303
Toll Free 888.571.0010
65 East Wadsworth Park Drive
Suite 205 Draper, Utah 84020

LICENSED ARCHITECT
Late
Theodore
Harris
6278-0301
23 MAY 2025
STATE OF UTAH

THE CHURCH OF
JESUS CHRIST
OF LATTER-DAY SAINTS

Nibley 6 &
Nibley UT West Stake

Approx. 3410 South 1200 West, Nibley, Utah
41.672809, -111.840775

BHD #: 2403
County Parcel: 03050:0016
Plan Series: Heritage 24
Owner #: 514-4728
Date: 29 May 2025

Drawing Issue and Revision Schedule

#	Date	Description
1	29 May 2024	Bid Documents

Base, and Threshold Details

A553

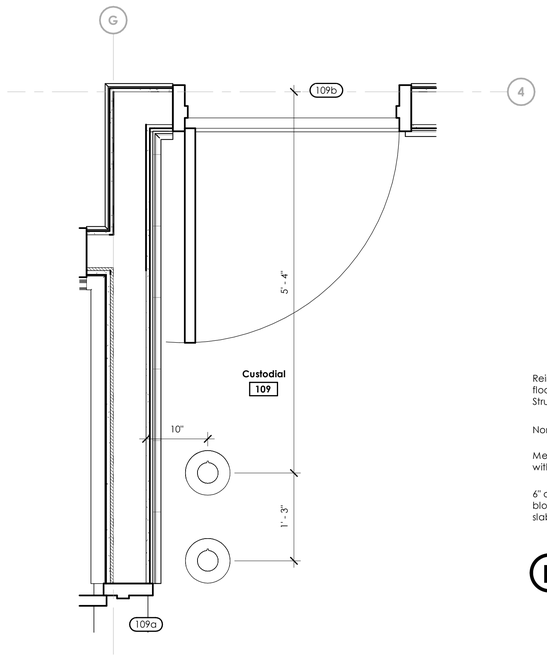

A Volleyball Post Storage Sleeves
Scale: 1" = 1'-0"

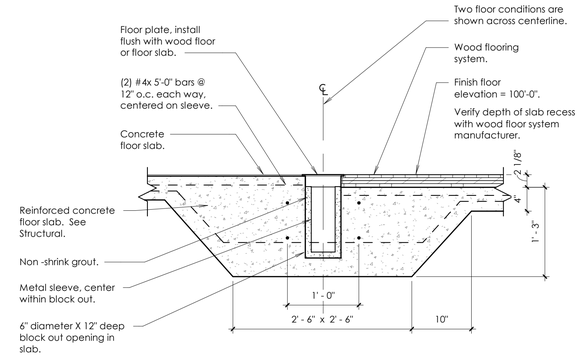

B Volleyball Post Sleeve
Scale: 1" = 1'-0"

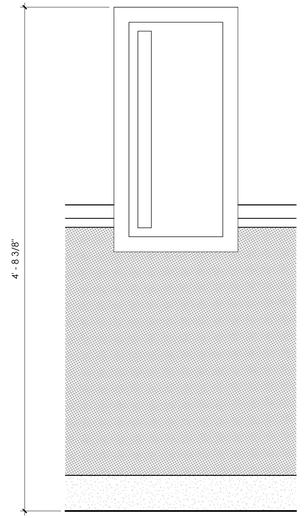

C Fire Extinguisher Cabinet Elevation
Scale: 1 1/2" = 1'-0"

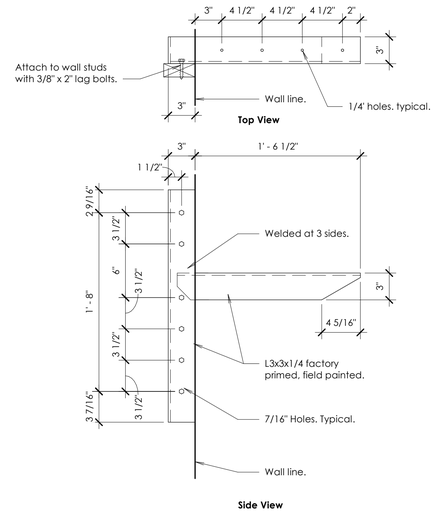

D Countertop Support Detail
Scale: 1 1/2" = 1'-0"

F Fire Stop Detail
Scale: 1 1/2" = 1'-0"

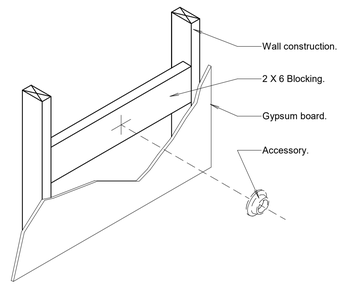

G Wall Blocking
Scale: 1" = 1'-0"

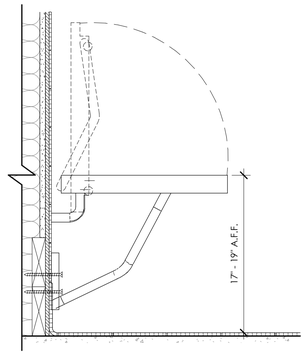

H Folding Bench Detail
Scale: 1 1/2" = 1'-0"

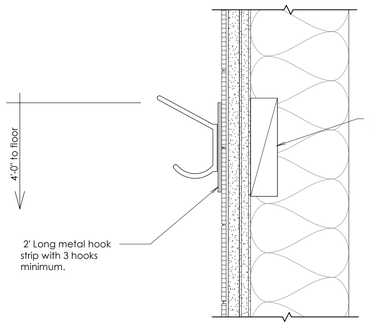

J Wall Hook Detail
Scale: 3" = 1'-0"

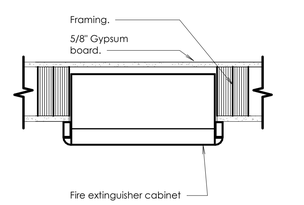

E Fire Extinguisher Cabinets Section
Scale: 1 1/2" = 1'-0"

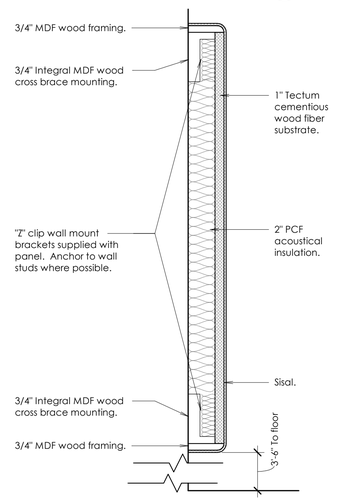

K Acoustical Panel
Scale: 1 1/2" = 1'-0"

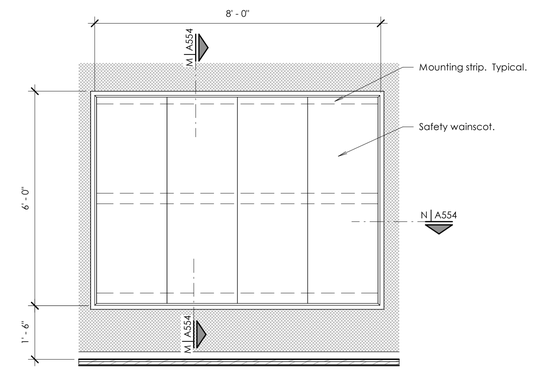

L Safety Wainscot
Scale: 1/2" = 1'-0"

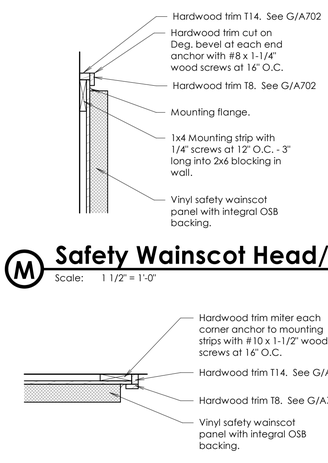

M Safety Wainscot Head/Sill
Scale: 1 1/2" = 1'-0"

N Safety Wainscot Jamb/Trim
Scale: 1 1/2" = 1'-0"

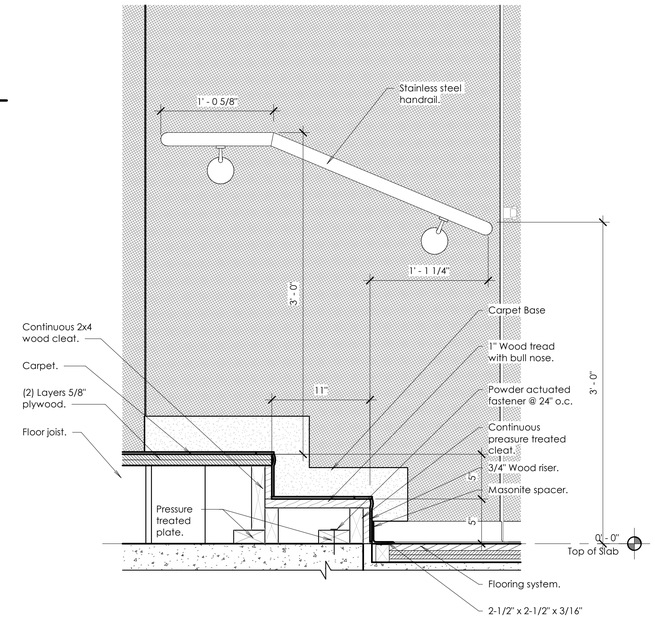

P Enlarged Platform Stair Detail
Scale: 1 1/2" = 1'-0"

5/29/2025 9:34:26 AM

bhd ARCHITECTS
www.bhdarchitects.com
Phone 801.571.0010
Fax 801.571.0303
Toll Free 888.571.0010
65 East Wadsworth Park Drive
Suite 205 Draper, Utah 84020

LICENSED ARCHITECT
Lafe Theodore Harris
6278378-0301
29 MAY 2025
STATE OF UTAH

THE CHURCH OF JESUS CHRIST OF LATTER-DAY SAINTS

Nibley 6 & Nibley UT West Stake

Approx. 3410 South 1200 West, Nibley, Utah
41.670809, -111.860775

Date: 29 May 2025
BHD #: 2403
County Parcel: 03:050:0016
Plan Series: Heritage 24
Owner #: 514-4728

Drawing Issue and Revision Schedule

#	Date	Description

Miscellaneous Details

A554

1 Frame Type 1
Scale: 1/2" = 1'-0"

2 Frame Type 2
Scale: 1/2" = 1'-0"

3 Frame Type 3
Scale: 1/2" = 1'-0"

4 Frame Type 4
Scale: 1/2" = 1'-0"

5 Frame Type 5
Scale: 1/2" = 1'-0"

6 Frame Type 6
Scale: 1/2" = 1'-0"

A Door Type A
Scale: 1/2" = 1'-0"

B Door Type B
Scale: 1/2" = 1'-0"

C Door Type C
Scale: 1/2" = 1'-0"

D Door Type D
Scale: 1/2" = 1'-0"

General Notes

A.	Due to multiple use, some of the details referred to on the door schedule are reversed and / or turned from the direction shown on the floor plan. The general intent of the details shall in all cases be followed and the Architect shall be consulted should questions arise.
B.	Doors shall be set to clear the finished floor surface by 1/2".
C.	Hollow metal door frame throat dimensions shall be 1/4" wider than the finished wall thickness. See 1/A542. Frame throat dimensions listed on the Door Schedule and door details are to assist in preparation of bids but shall in all cases be field verified prior to fabrication and installation of door frames.
D.	See the Specifications for keying requirements. Coordinate all keying requirements and scheduling with the Facilities Management Group prior to fabrication.
E.	See the Specifications for Hardware Group definitions.
F.	All door hardware shall comply with the requirements of IBC 1010.1.9.1. Door handles, pulls, latches, locks, and other operating devices shall not require tight grasping, tight pinching, or twisting of the wrist to operate.
G.	No doors on this project are fire rated.

Door Stop / Closer Function

DS1	Wall stop. No closer.
DS2	Closer with cush-stop arm, wall stop.
DS3	Closer with cush-stop arm.
DS4	Closer with detent hold-open arm.
DS5	Closer and wall stop.
DS6	Closer with friction hold open arm and wall stop.
DS7	Closer with detent spring-stop hold open arm.

Door Swing Settings

SS1	Mount door hardware to allow the maximum swing opening (approximately 90°) that will engage the hold-open function while preventing contact between the door and the chair rail even when significant force is applied to the door.
SS2	Mount door hardware to allow the maximum swing opening (approximately 175°) that will still engage the hold-open function.
SS3	Mount door hardware to allow the maximum swing opening (not to exceed 110°) without the door or hardware contacting opposing surfaces.

Thresholds

T1	Aluminum threshold. See J, K, L, and M/A553.
T1b	Aluminum threshold by wood floor contractor. See F and H/A553.
T2	Stone threshold by tile contractor. See E/A553.
T3	Metal transition strip by tile contractor. See G/A553.
T4	Sound control threshold. See N/A553.

Owner Furnished Hardware

OF1	Prepare for access controls. Access controls furnished and installed by owner.
OF2	Prepare for high security cylinder. High security cylinder furnished and installed by owner.

Remarks

1	See astragal Detail J/A542.
2	Low energy swing door operator.

Door Schedule

Mark	Room	Single	Pair	Door Type	Width	Height	Frame Type	Hardware Group	Threshold	Stop/ Closer	Swing Setting	Owner Furnished	Remarks	Mark
Storefront Doors														
114a	Vestibule	X		C	3' - 0"	7' - 0"	C/A602	ST1B	T1	DS2	SS1			114a
114b	Vestibule	X		C	3' - 0"	7' - 0"	D/A602	ST3B	T1	DS3	SS1			114b
119a	Vestibule	X		C	3' - 6"	7' - 0"	E/A602	ST1B	T1	DS3	SS3			119a
119b	Vestibule	X		C	3' - 6"	7' - 0"	E/A602	ST1	T1	DS3	SS3	OF1		119b
119c	Vestibule	X		C	3' - 6"	7' - 0"	F/A602	ST3B	T1	DS3	SS3			119c
119d	Vestibule	X		C	3' - 6"	7' - 0"	F/A602	ST3B	T1	DS3	SS3			119d
129a	Serving Area	X		C	3' - 0"	7' - 0"	1	ST1B	T1	DS7	SS3			129a
142a	Vestibule	X		C	3' - 0"	7' - 0"	G/A602	ST1B	T1	DS2	SS1	OF1		142a
142b	Vestibule	X		C	3' - 0"	7' - 0"	G/A602	ST1	T1	DS2	SS1	OF2		142b
142c	Vestibule	X		C	3' - 0"	7' - 0"	H/A602	ST3B	T1	DS3	SS1			142c
142d	Vestibule	X		C	3' - 0"	7' - 0"	H/A602	ST3B	T1	DS3	SS1			142d
165a	Vestibule	X		C	3' - 6"	7' - 0"	E/A602	ST1A	T1	DS3	SS3	OF1	2	165a
165b	Vestibule	X		C	3' - 6"	7' - 0"	E/A602	ST1B	T1	DS3	SS3			165b
165c	Vestibule	X		C	3' - 6"	7' - 0"	F/A602	ST3A	T1	DS3	SS3		2	165c
165d	Vestibule	X		C	3' - 6"	7' - 0"	F/A602	ST3B	T1	DS3	SS3			165d
169a	Vestibule	X		C	3' - 0"	7' - 0"	C/A602	ST1B	T1	DS2	SS1			169a
169b	Vestibule	X		C	3' - 0"	7' - 0"	D/A602	ST3B	T1	DS3	SS1			169b
Solid Core Wood Doors														
103a	Chapel	X		A	3' - 0"	7' - 0"	2	30		DS4	SS1			103a
103b	Chapel		X	A	6' - 0"	7' - 0"	3	52		DS4	SS1			103b
103c	Chapel		X	A	6' - 0"	7' - 0"	3	52		DS4	SS1			103c
103d	Chapel	X		A	3' - 0"	7' - 0"	2	30		DS4	SS1			103d
104a	Sacrament Preparation	X		A	3' - 0"	7' - 0"	2	20A		DS1				104a
105a	Technology	X		A	3' - 0"	7' - 0"	2	26A		DS1				105a
105b	Technology	X		A	3' - 0"	7' - 0"	2	26	T4	DS1				105b
106a	Cultural Center 1	X		A	3' - 0"	7' - 0"	2	30	T1b	DS7	SS1			106a
106b	Cultural Center 1	X		A	3' - 0"	7' - 0"	2	30	T1b	DS7	SS1			106b
106c	Cultural Center 1	X		A	3' - 0"	7' - 0"	2	30	T1b	DS7	SS1			106c
106d	Cultural Center 1	X		A	3' - 0"	7' - 0"	2	30	T1b	DS7	SS1			106d
107a	Cultural Center 2	X		A	3' - 0"	7' - 0"	2	30	T1b	DS7	SS1			107a
107b	Cultural Center 2	X		A	3' - 0"	7' - 0"	2	30	T1b	DS7	SS1			107b
109a	Custodial	X		A	3' - 0"	7' - 0"	2	20C	T1b	DS1				109a
109b	Custodial	X		A	3' - 0"	7' - 0"	2	20C	T2	DS1				109b
110a	Ramp	X		B	3' - 0"	7' - 0"	2	30		DS4	SS1			110a
111a	Ramp	X		B	3' - 0"	7' - 0"	2	28	T1b	DS6	SS2			111a
112a	Storage		X	A	7' - 0"	7' - 0"	3	50A	T1b	DS1				112a
113a	Family Restroom	X		A	3' - 0"	7' - 0"	2	32	T2	DS5				113a
116a	Bishop	X		A	3' - 0"	7' - 0"	2	26	T4	DS1				116a
117a	Clerk	X		A	3' - 0"	7' - 0"	2	26	T4	DS1				117a
122a	Clerk	X		A	3' - 0"	7' - 0"	2	26	T4	DS1				122a
123a	Bishop	X		A	3' - 0"	7' - 0"	2	26	T4	DS1				123a
124a	Room	X		B	3' - 0"	7' - 0"	2	20A		DS1				124a
125a	Room	X		B	3' - 0"	7' - 0"	2	20A		DS1				125a
126a	Interview	X		A	3' - 0"	7' - 0"	2	20A		DS1				126a
129b	Serving Area	X		B	3' - 0"	7' - 0"	2	30	T3	DS4	SS1			129b
129c	Serving Area		X	A	6' - 0"	7' - 0"	3	50B	T3	DS1			1	129c
130a	Room	X		B	3' - 0"	7' - 0"	2	30		DS4	SS1			130a
131a	Room	X		B	3' - 0"	7' - 0"	2	30						131a
132a	Room	X		B	3' - 0"	7' - 0"	2	30		DS4	SS1			132a
133a	Materials Center	X		A	3' - 0"	7' - 0"	2	26A		DS1				133a
134a	Room	X		B	3' - 0"	7' - 0"	2	20A						134a
135a	Room	X		B	3' - 6"	7' - 0"	2	30		DS4	SS1			135a
138a	Women	X		A	3' - 0"	7' - 0"	2	28	T2	DS5				138a
139a	Font	X		A	3' - 0"	7' - 0"	2	32A		DS5				139a
139b	Font		X	A	7' - 0"	7' - 0"	6	50F		DS1			1	139b
139c	Font	X		A	3' - 0"	7' - 0"	2	32A		DS5				139c
140a	Family Restroom	X		A	3' - 0"	7' - 0"	2	32	T2	DS5				140a
141a	Men	X		A	3' - 0"	7' - 0"	2	28	T2	DS5				141a
143a	Snow Storage	X		A	3' - 0"	7' - 0"	2	20A	T5	DS1				143a
144a	Interview	X		A	3' - 0"	7' - 0"	2	20B						144a
145a	Waiting	X		A	3' - 0"	7' - 0"	2	26A		DS1				145a
146a	Stake President	X		A	3' - 0"	7' - 0"	2	26	T4	DS1				146a
147a	Clerk	X		A	3' - 0"	7' - 0"	2	26	T4	DS1				147a
148a	High Council	X		A	3' - 0"	7' - 0"	2	26	T4	DS1				148a
148b	High Council	X		A	3' - 0"	7' - 0"	2	26	T4	DS1				148b
149a	Interview	X		A	3' - 0"	7' - 0"	2	20B	T4	DS1				149a
150a	Family Restroom	X		A	3' - 0"	7' - 0"	2	32	T2	DS5				150a
151a	Room	X		B	3' - 0"	7' - 0"	2	30		DS4	SS1			151a
153a	Room	X		B	3' - 0"	7' - 0"	2	20A		DS1				153a
154a	Room	X		B	3' - 0"	7' - 0"	2	20A		DS1				154a
155a	Room	X		B	3' - 0"	7' - 0"	2	30		DS4	SS1			155a
156a	Room	X		B	3' - 0"	7' - 0"	2	20A		DS1				156a
157a	Room	X		B	3' - 0"	7' - 0"	2	30		DS4	SS1			157a
158a	Room	X		B	3' - 0"	7' - 0"	2	20A		DS1				158a
159a	Room	X		B	3' - 0"	7' - 0"	2	20A		DS1				159a
160a	Room	X		B	3' - 0"	7' - 0"	2	20A		DS1				160a
162a	Bishop	X		A	3' - 0"	7' - 0"	2	26	T4	DS1				162a
163a	Clerk	X		A	3' - 0"	7' - 0"	2	26	T4	DS1				163a
167a	Clerk	X		A	3' - 0"	7' - 0"	2	26	T4	DS1				167a
168a	Bishop	X		A	3' - 0"	7' - 0"	2	26	T4	DS1				168a
170a	Family Restroom	X		A	3' - 0"	7' - 0"	2	32	T2	DS5				170a
Hollow Metal Doors														
127a	Fire Riser	X		D	3' - 0"	7' - 0"	4	3	T1	DS7	SS3			127a
128a	Stair	X		D	3' - 0"	7' - 0"	4	3	T1	DS7	SS3	OF2		128a
135b	Room	X		D	3' - 6"	7' - 0"	4	2	T1	DS7	SS3			135b
152b	Room	X		D	3' - 0"	7' - 0"	4	2	T1	DS7	SS3			152b
301a	Storage	X		D	3' - 0"	7' - 0"	5	1	T1	DS7	SS3			301a
302a	Storage	X		D	3' - 6"	7' - 0"	5	1	T1	DS7	SS3			302a
303a	Storage	X		D	3' - 0"	7' - 0"	5	1	T1	DS7	SS3			303a
304a	Storage	X		D	3' - 0"	7' - 0"	5	1	T1	DS7	SS3			304a
305a	Storage	X		D	3' - 0"	7' - 0"	5	1	T1	DS7	SS3			305a
Partitions														
P1	Chapel		X		65' - 2 1/4"	13' - 1 3/8"			T/A611				-	P1
P2	Cultural Center 1		X		65' - 2 1/4"	13' - 1 3/8"			T/A611				-	P2
P3	Platform		X		29' - 11 11/16"	12' - 11 1/8"			T/A611				-	P3
P4	Room	X			16' - 0"	8' - 0"								P4
P5	Room	X			16' - 0"	8' - 0"								P5
P6	Room	X			15' - 10"	8' - 0"								P6
P7	Room	X			16' - 0"	8' - 0"								P7
P8	Room	X			16' - 0"	8' - 0"								P8

bhd ARCHITECTS
www.bhdarchitects.com
Phone 801.571.0010
Fax 801.571.0303
Toll Free 888.571.0010
65 East Wadsworth Park Drive
Suite 205 Draper, Utah 84020

LICENSED ARCHITECT
Lafe Theodore Harris
6928898-0301
STATE OF UTAH
29 May 2025

THE CHURCH OF JESUS CHRIST OF LATTER-DAY SAINTS

Nibley 6 & Nibley UT West Stake

Approx. 3410 South 1200 West, Nibley, Utah
41.670809, -111.860775

Date: 29 May 2025
BHD #: 2403
County Parcel: 03:050:0016
Plan Series: Heritage 24
Owner #: 514-4728

Drawing Issue and Revision Schedule		
#	Date	Description

Door Schedule

A601

5/29/2025 9:34:28 AM

Glazing Schedule

1	Single pane
2	Double pane
O	Obscure glazing
C	Clear glazing
T	Tempered glazing
S	Spandrel coating

Rough Opening Note

A. The overall dimensions of the frames listed on this sheet are framed rough opening dimensions. Adjust the dimensions of the frames as required to allow the windows and doors to be installed inside the framed rough openings. Field verify the actual rough openings prior to fabricating frames.

NOTE:
Provide tempered glazing at Windows A11, A18 and A23

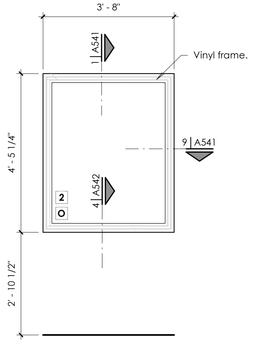

A Type A
Scale: 1/2" = 1'-0"

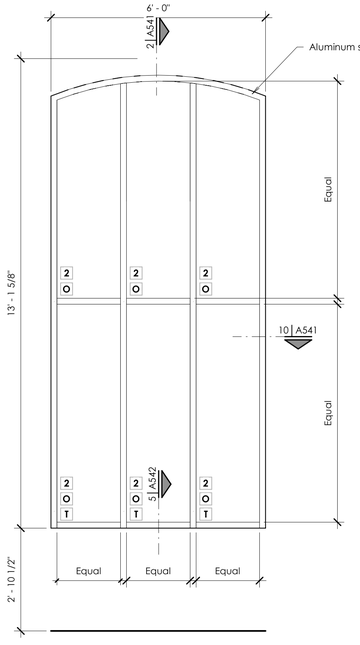

B Type B
Scale: 1/2" = 1'-0"

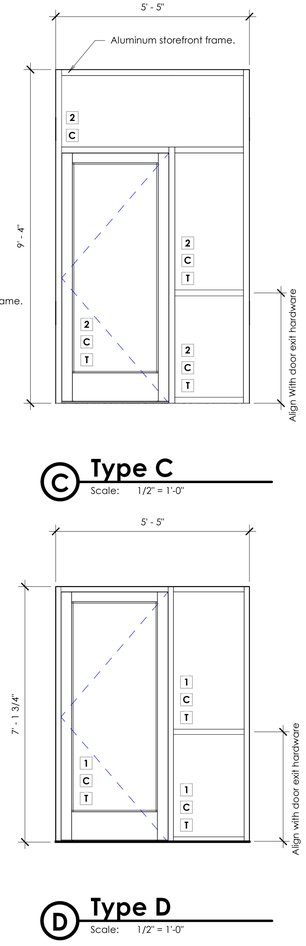

C Type C
Scale: 1/2" = 1'-0"

D Type D
Scale: 1/2" = 1'-0"

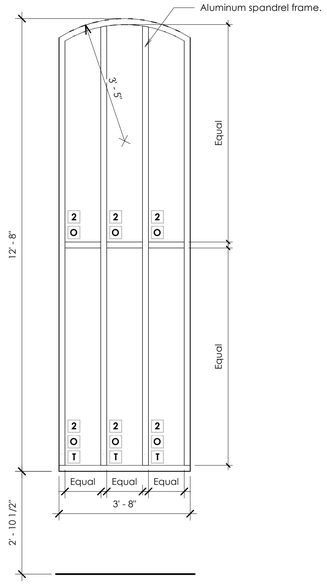

L Type L
Scale: 1/2" = 1'-0"

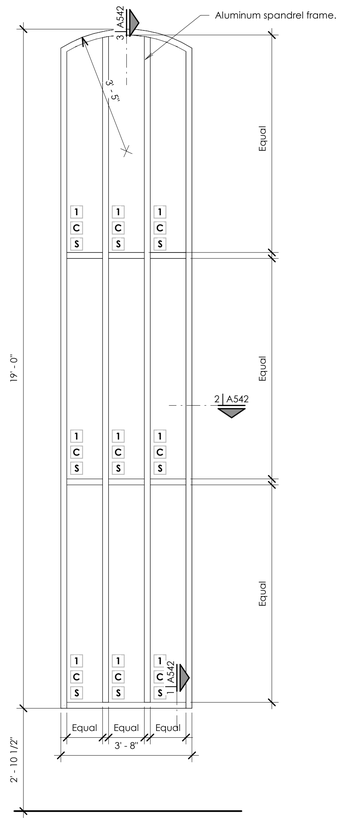

K Type K
Scale: 1/2" = 1'-0"

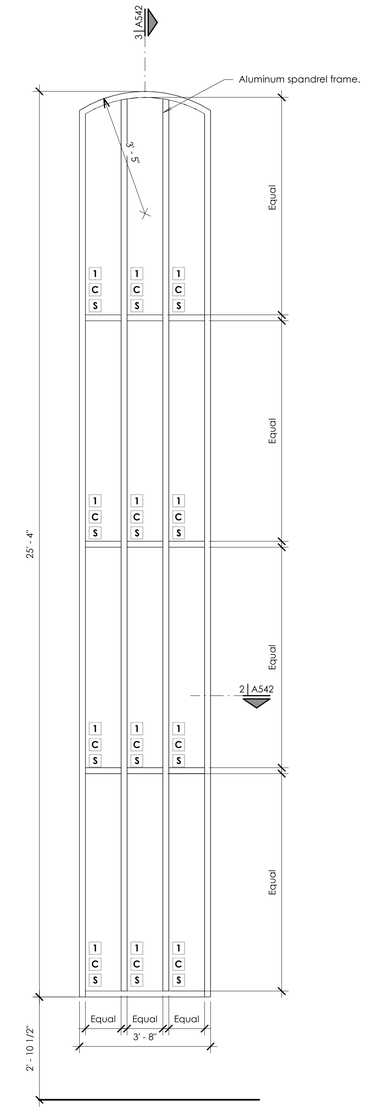

J Type J
Scale: 1/2" = 1'-0"

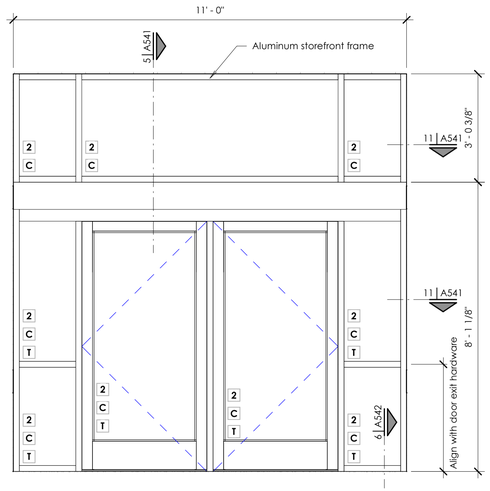

E Type E
Scale: 1/2" = 1'-0"

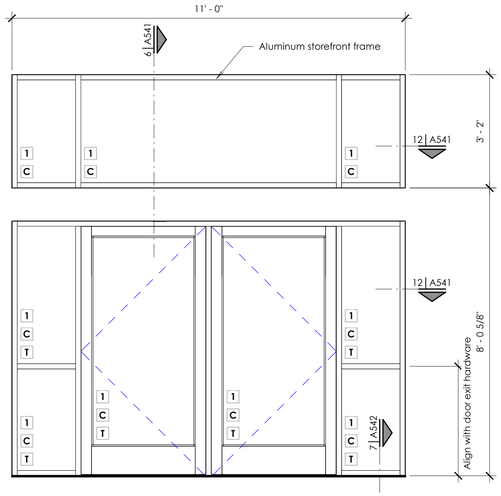

F Type F
Scale: 1/2" = 1'-0"

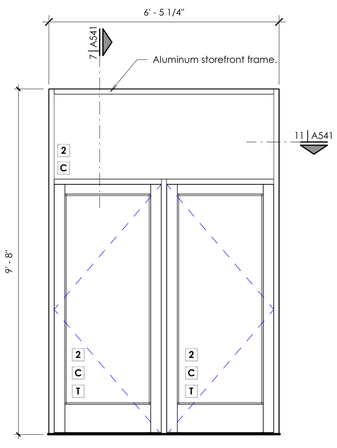

G Type G
Scale: 1/2" = 1'-0"

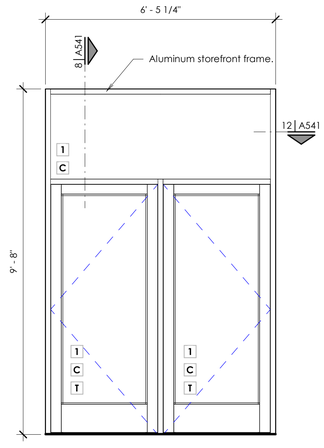

H Type H
Scale: 1/2" = 1'-0"

Type J
Scale: 1/2" = 1'-0"

bhd ARCHITECTS
www.bhdarchitects.com
Phone 801.571.0010
Fax 801.571.0303
Toll Free 888.571.0010
65 East Wadsworth Park Drive
Suite 205 Draper, Utah 84020

LICENSED ARCHITECT
Lafe Theodore Harris
6278378-0301
23 MAY 2025
STATE OF UTAH

THE CHURCH OF
JESUS CHRIST
OF LATTER-DAY SAINTS

Nibley 6 &
Nibley UT West Stake

Approx. 3410 South 1200 West, Nibley, Utah
41.670809, -111.860775

Owner #: 514-4728
Plan Series: Heritage 24
County Parcel: 03:050:0016
BHD #: 2403
Date: 29 May 2025

Drawing Issue and Revision Schedule

#	Date	Description

Window Elevations

A602

5/29/2025 9:34:32 AM

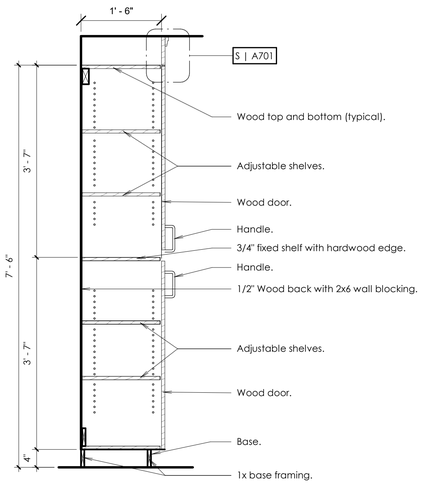

A Section

Scale: 3/4" = 1'-0"

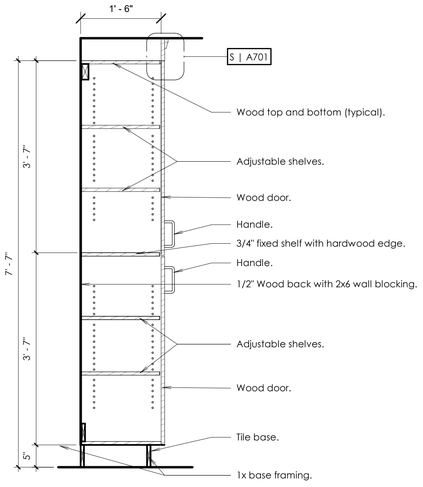

B Section

Scale: 3/4" = 1'-0"

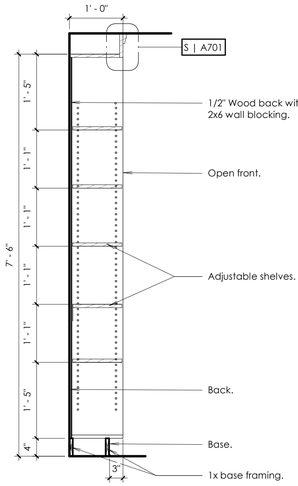

C Section

Scale: 3/4" = 1'-0"

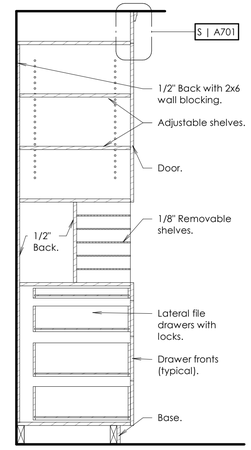

D Section

Scale: 3/4" = 1'-0"

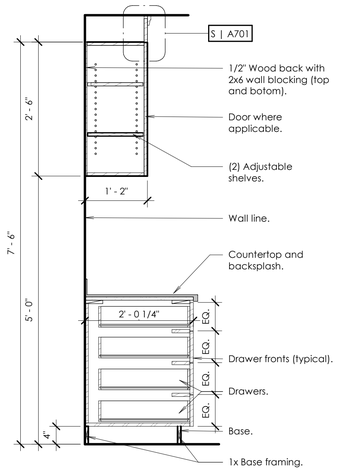

E Section

Scale: 3/4" = 1'-0"

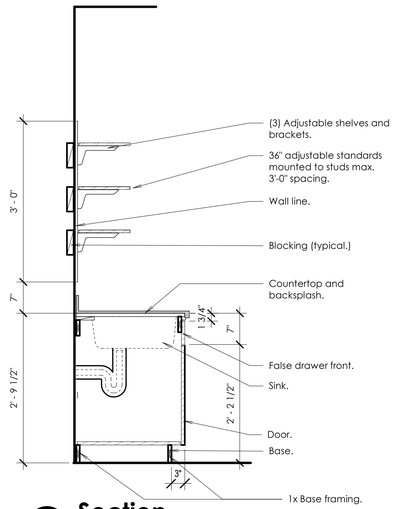

F Section

Scale: 3/4" = 1'-0"

G Section

Scale: 3/4" = 1'-0"

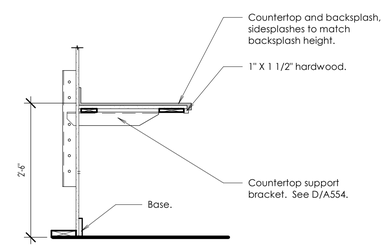

H Section

Scale: 3/4" = 1'-0"

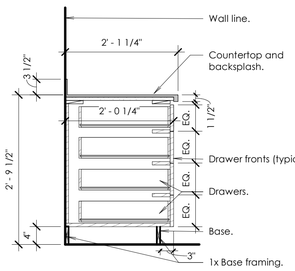

J Section

Scale: 3/4" = 1'-0"

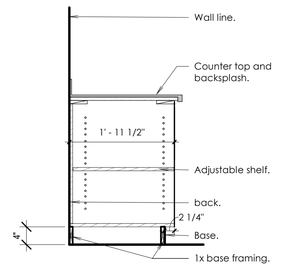

K Section

Scale: 3/4" = 1'-0"

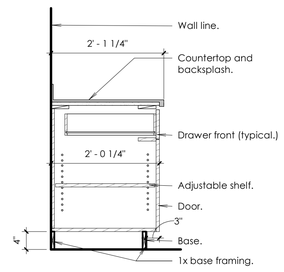

L Section

Scale: 3/4" = 1'-0"

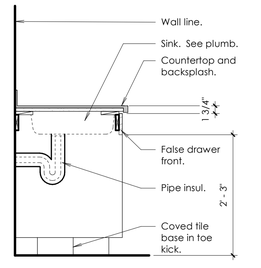

M Section

Scale: 3/4" = 1'-0"

N Section

Scale: 3/4" = 1'-0"

P Section

Scale: 3/4" = 1'-0"

Q Detail

Scale: 3/4" = 1'-0"

R Detail

Scale: 3" = 1'-0"

Lay-in tile ceilings | **Gypsum board ceilings**

S Cabinet Soffit Detail

Scale: 3" = 1'-0"

bhd ARCHITECTS
www.bhdarchitects.com
Phone 801.571.0010
Fax 801.571.0303
Toll Free 888.571.0010
65 East Wadsworth Park Drive
Suite 205 Draper, Utah 84020

LICENSED ARCHITECT
Late Theodore Harris
#7578-0301
23 MAY 2025
STATE OF UTAH

THE CHURCH OF JESUS CHRIST OF LATTER-DAY SAINTS

Nibley 6 & Nibley UT West Stake

Approx. 3410 South 1200 West, Nibley, Utah
41.670809, -111.866775

Owner #: 514-4728
Plan Series: Heritage 24
County Parcel: 03050:0016
BHD #: 2403
Date: 29 May 2025

Drawing Issue and Revision Schedule

#	Date	Description

Casework Details

A701

5/29/2025 9:34:34 AM

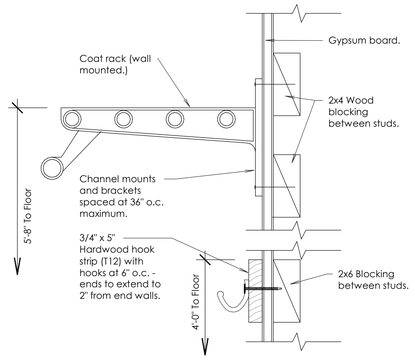

A Coat Rack Detail

Scale: 3" = 1'-0"

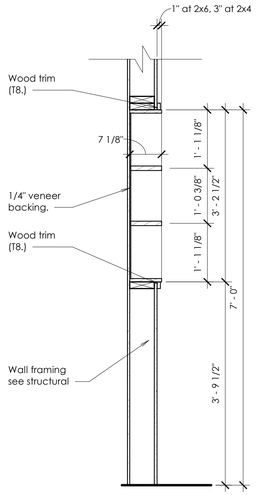

B Hymn Book Cabinet

Scale: 3/4" = 1'-0"

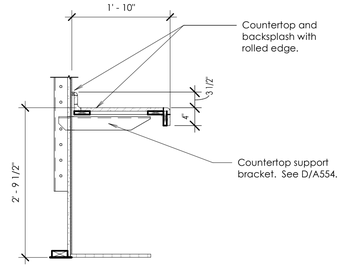

C Section

Scale: 3/4" = 1'-0"

D Open Adjustable Shelves

Scale: 3/4" = 1'-0"

Chair Rail Height (from finished floor to top)

3'- 4"	Platform.
3'- 1 1/2"	Materials center (align with top of backsplash.)
3'- 1"	Mother's Room.
2'- 10"	Clerks (align with top of backsplash).
2'- 9 1/2"	Waiting and hallways.
2'- 10 1/4"	All other rooms.

E Chair Rail Detail

Scale: 6" = 1'-0"

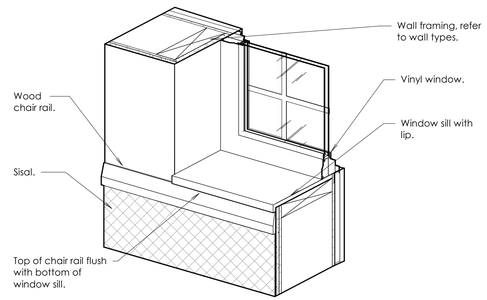

F Chair Rail at Window Detail

Scale: 1 1/2" = 1'-0"

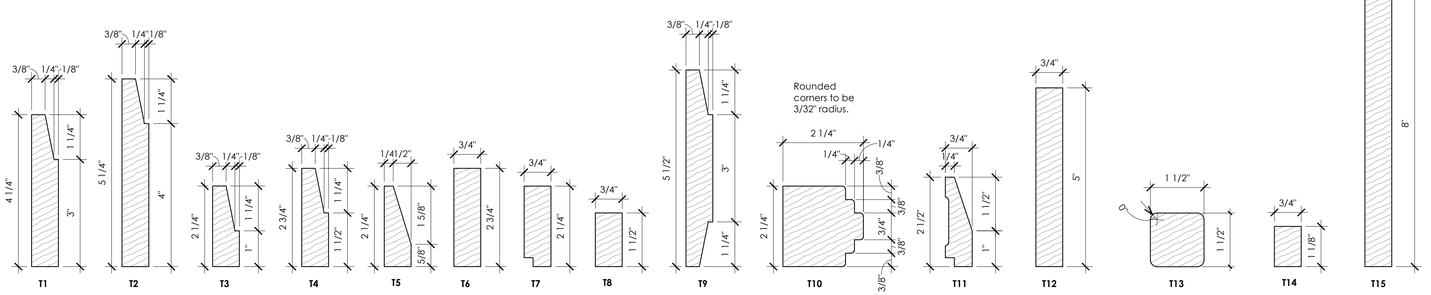

G Hardwood Trim Profiles

Scale: 6" = 1'-0"

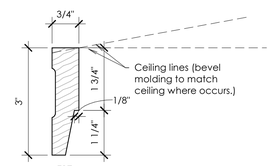

H Painted Trim Profile

Scale: 6" = 1'-0"

5/29/2025 9:34:34 AM

bhd ARCHITECTS
www.bhdarchitects.com
Phone 801.571.0010
Fax 801.571.0303
Toll Free 888.571.0010
65 East Wadsworth Park Drive
Suite 205 Draper, Utah 84020

LICENSED ARCHITECT Late Theodore Harris 23 MAY 2025 6278-0301 STATE OF UTAH

THE CHURCH OF JESUS CHRIST OF LATTER-DAY SAINTS

Nibley 6 & Nibley UT West Stake

Approx. 3410 South 1200 West, Nibley, Utah
41.670809, -111.860775

BHD #: 2403
County Parcel: 03:050:0016
Plan Series: Heritage 24
Owner #: 514-4728
Date: 29 May 2025

Drawing Issue and Revision Schedule

#	Date	Description

Casework Details

A702

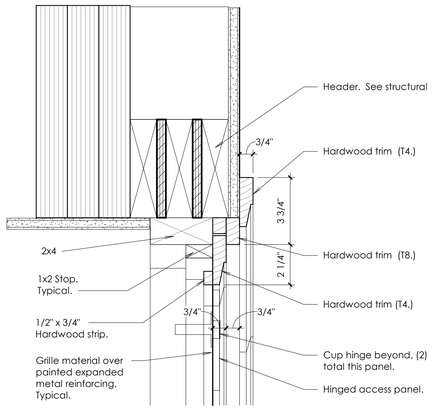

A Rostrum Center Accent Wall Head

Scale: 3" = 1'-0"

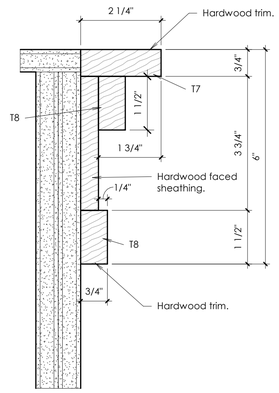

B Cove Trim Detail

Scale: 6" = 1'-0"

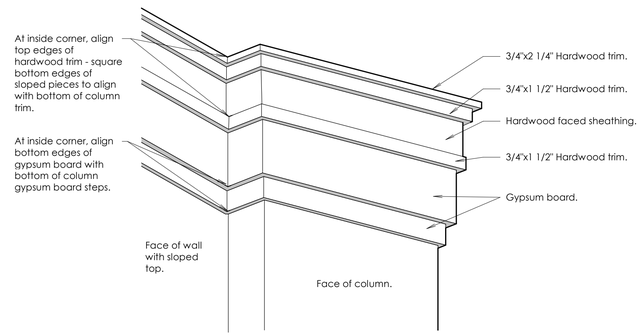

C Accent Wall Trim Connection

Scale: 3/4" = 1'-0"

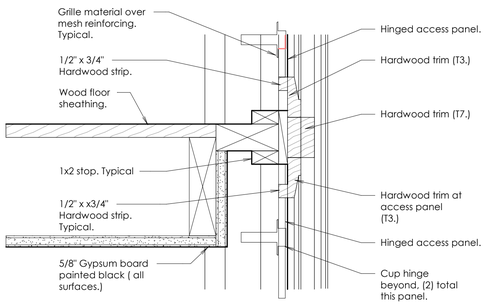

D Rostrum Center Accent Access Door Connection

Scale: 3" = 1'-0"

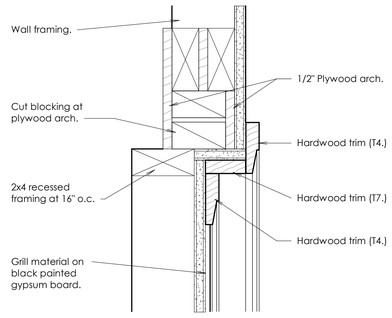

E Accent Side Wall Trim Head

Scale: 3" = 1'-0"

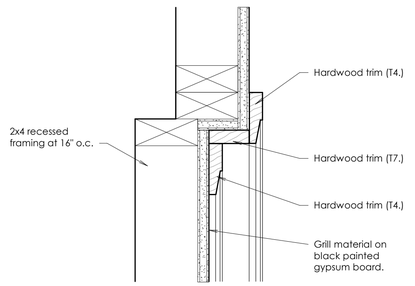

F Accent Side Wall Trim Jamb

Scale: 3" = 1'-0"

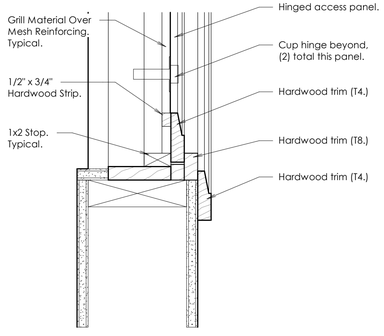

H Rostrum Center Accent Wall Sill

Scale: 3" = 1'-0"

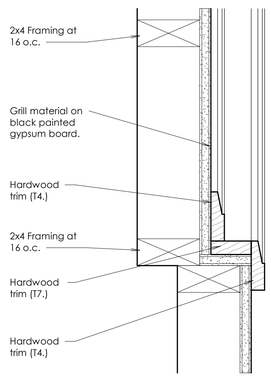

J Accent Side Wall Trim Sill

Scale: 3" = 1'-0"

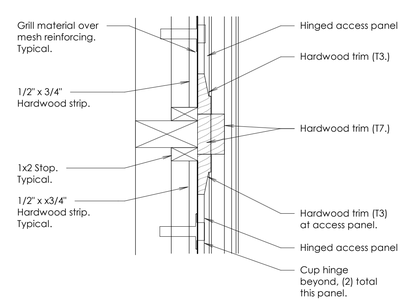

K Accent Panel Trim

Scale: 3" = 1'-0"

bhd ARCHITECTS
www.bhdarchitects.com
Phone 801.571.0010
Fax 801.571.0303
Toll Free 888.571.0010
65 East Wadsworth Park Drive
Suite 205 Draper, Utah 84020

LICENSED ARCHITECT
Lafe Theodore Harris
29 May 2025
6928898-0301
STATE OF UTAH

THE CHURCH OF JESUS CHRIST OF LATTER-DAY SAINTS

Nibley 6 & Nibley UT West Stake

Approx. 3410 South 1200 West, Nibley, Utah
41.670809, -111.860775

Date:	BHD #:	County Parcel:	Plan Series:	Owner #:
29 May 2025	2403	03:050:0016	Heritage 24	514-4728

Drawing Issue and Revision Schedule

#	Date	Description

Miscellaneous Interior Profiles

A703

5/29/2025 9:34:35 AM

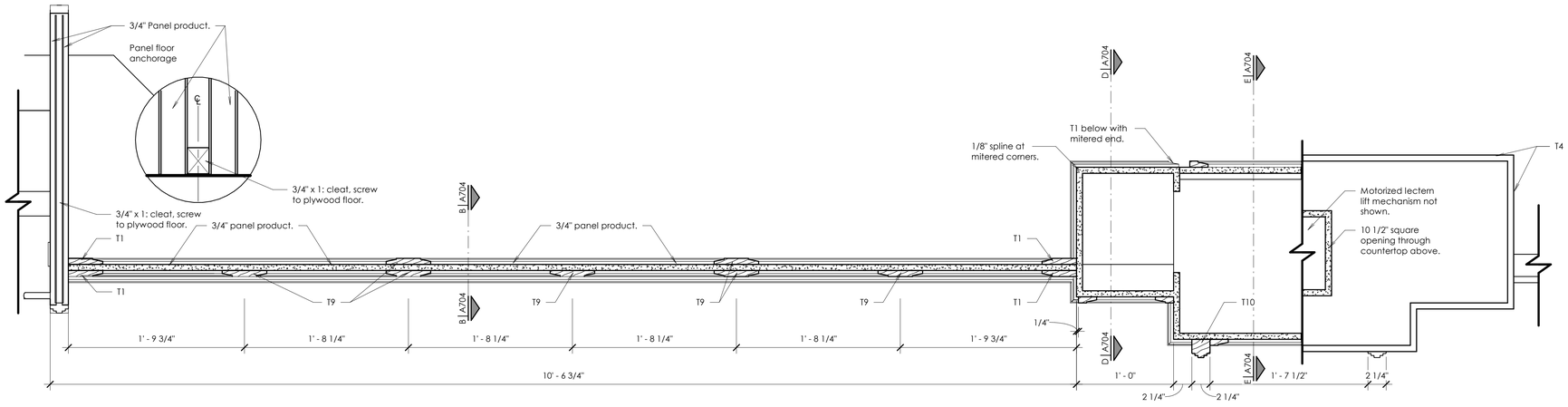

1 Pulpit and Modesty Rail Wall

Scale: 1 1/2" = 1'-0"

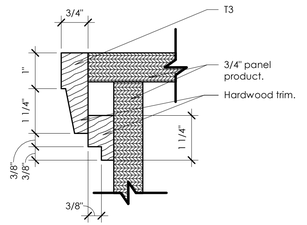

A Lectern Edge

Scale: 6" = 1'-0"

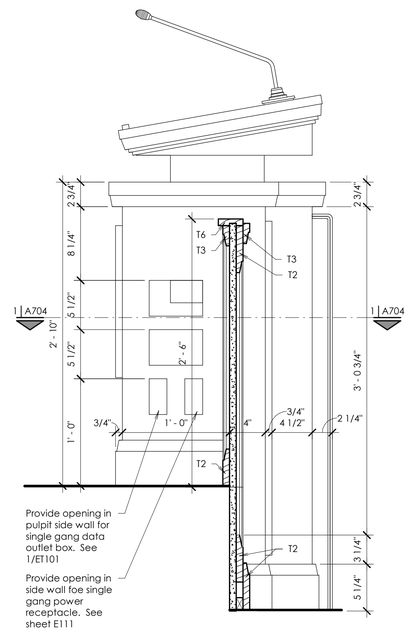

B Modesty Wall

Scale: 1 1/2" = 1'-0"

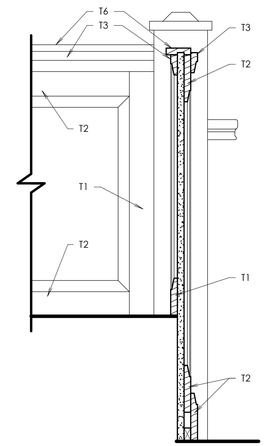

C Modesty Wall

Scale: 1 1/2" = 1'-0"

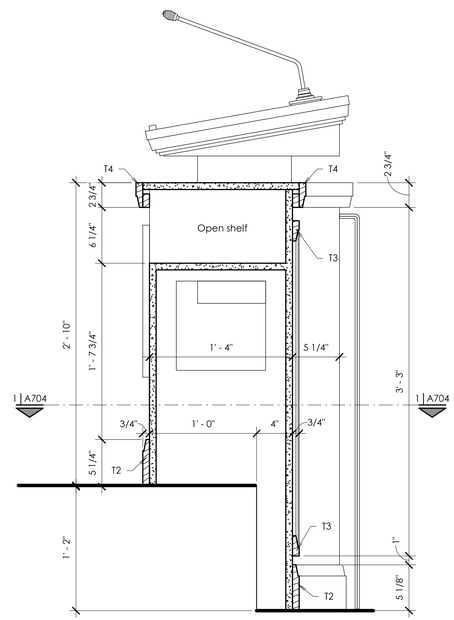

D Pulpit

Scale: 1 1/2" = 1'-0"

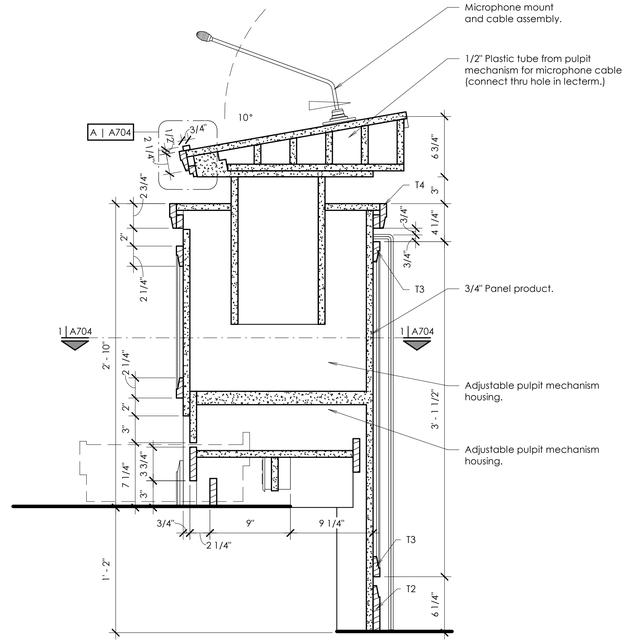

E Pulpit

Scale: 1 1/2" = 1'-0"

5/29/2025 9:34:36 AM

bhd ARCHITECTS
www.bhdarchitects.com
Phone 801.571.0010
Fax 801.571.0303
Toll Free 888.571.0010
65 East Wadsworth Park Drive
Suite 205 Draper, Utah 84020

LICENSED ARCHITECT Late Theodore Harris 23 MAY 2025 STATE OF UTAH

THE CHURCH OF JESUS CHRIST OF LATTER-DAY SAINTS

Nibley 6 &
Nibley UT West Stake

Approx. 3410 South 1200 West, Nibley, Utah
41.670809, -111.866775

Date: 29 May 2025
BHD #: 2403
County Parcel: 03050,0016
Plan Series: Heritage 24
Owner #: 514-4728

Drawing Issue and Revision Schedule

#	Date	Description

Rostrum Casework Details

A704

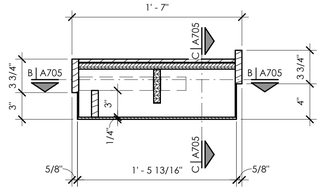

A Pull-Out Step Side

Scale: 1 1/2" = 1'-0"

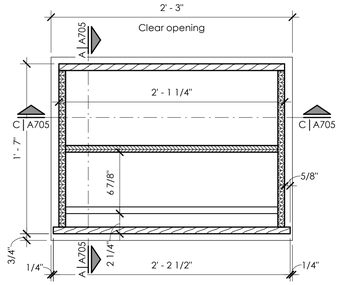

B Pull-Out Step

Scale: 1 1/2" = 1'-0"

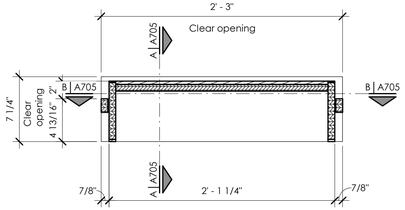

C Pull-Out Step Front

Scale: 1 1/2" = 1'-0"

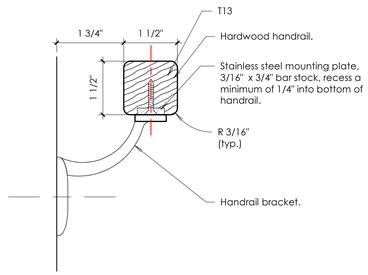

D Handrail Section

Scale: 6" = 1'-0"

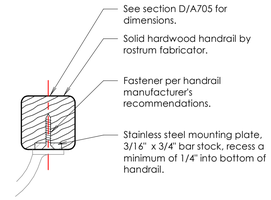

E Typical Handrail Detail

Scale: 6" = 1'-0"

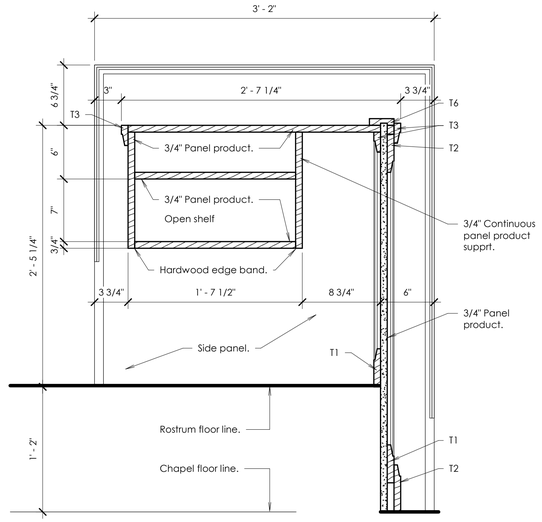

F Sacrament Table

Scale: 1 1/2" = 1'-0"

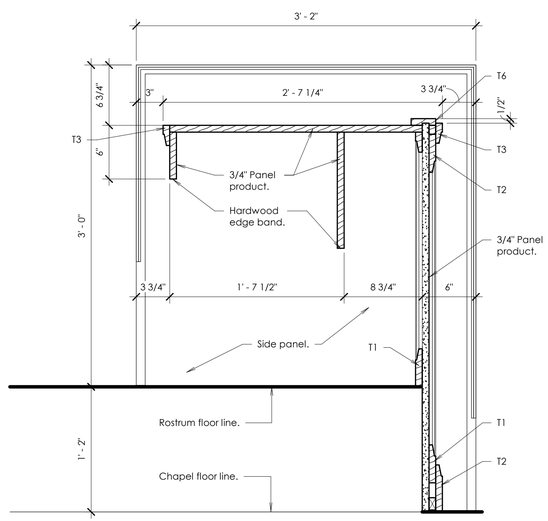

G Sacrament Table

Scale: 1 1/2" = 1'-0"

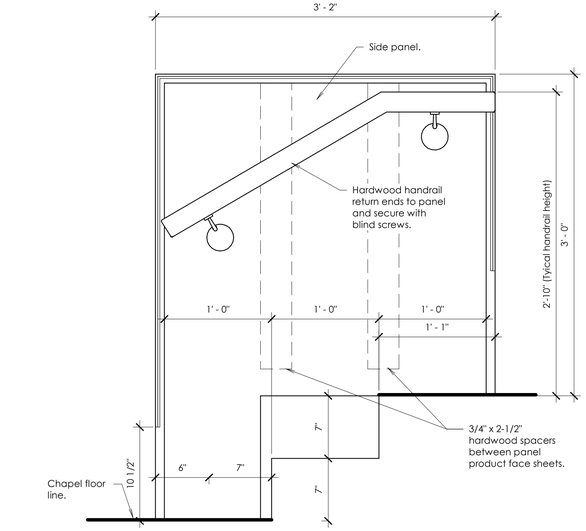

H Rostrum Steps Side Panel

Scale: 1 1/2" = 1'-0"

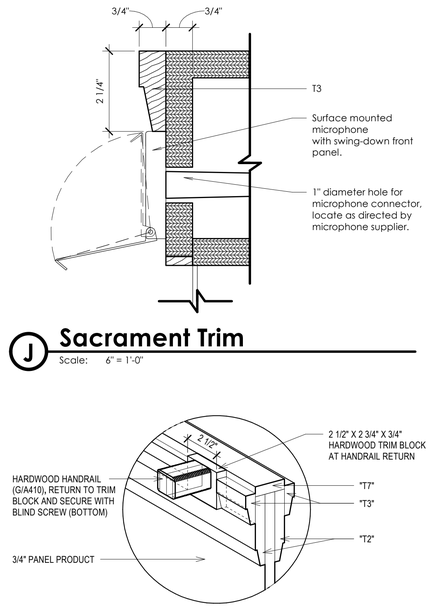

J Sacrament Trim

Scale: 6" = 1'-0"

K Handrail Return

Scale: 1 1/2" = 1'-0"

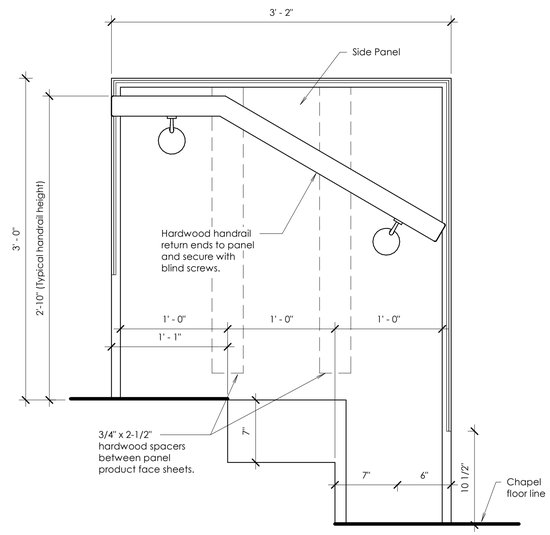

L Rostrum Steps Side Panel

Scale: 1 1/2" = 1'-0"

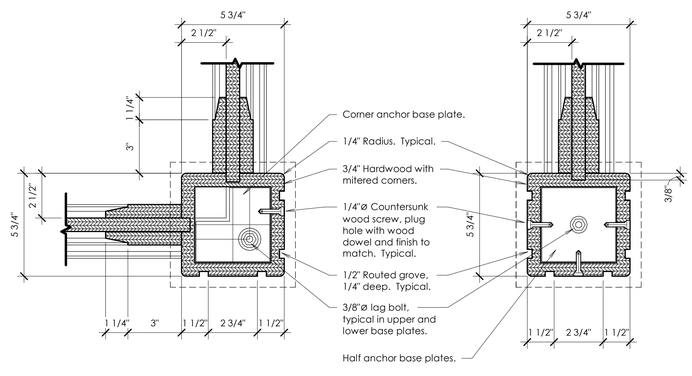

M Newel Post Types

Scale: 3" = 1'-0"

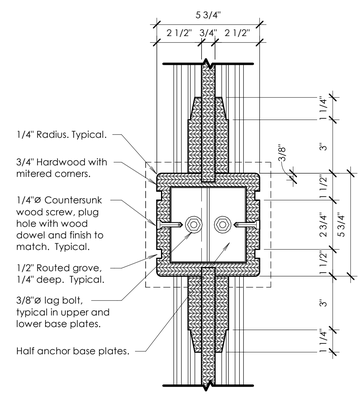

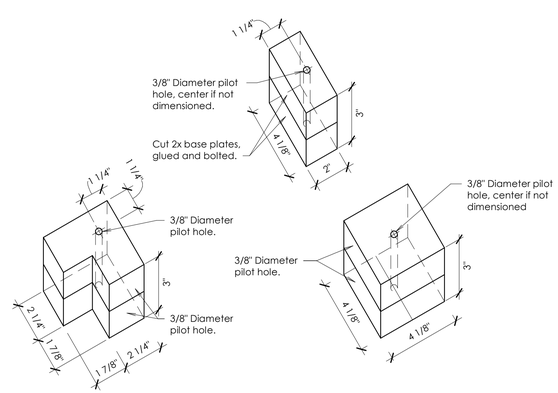

N Chapel Newel Post Isomtrics

Scale: 3" = 1'-0"

5/29/2025 9:34:37 AM

bhd ARCHITECTS
www.bhdarchitects.com
Phone 801.571.0010
Fax 801.571.0303
Toll Free 888.571.0010
65 East Wadsworth Park Drive
Suite 205 Draper, Utah 84020

LICENSED ARCHITECT
Lafe Theodore Harris
6278378-0301
23 MAY 2025
STATE OF UTAH

THE CHURCH OF JESUS CHRIST OF LATTER-DAY SAINTS

Nibley 6 & Nibley UT West Stake

Approx. 3410 South 1200 West, Nibley, Utah
41.670809, -111.860775

Date: 29 May 2025
BHD #: 2403
County Parcel: 03:050:0016
Plan Series: Heritage 24
Owner #: 514-4728

Drawing Issue and Revision Schedule

#	Date	Description

Rostrum Casework Details

A705

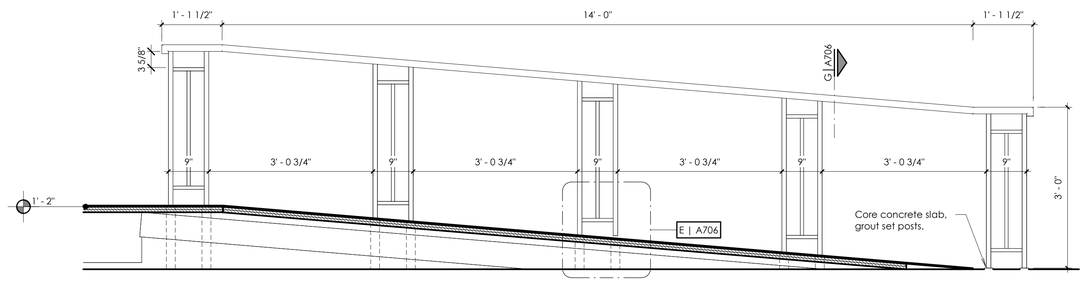

A Ramp Railing

Scale: 3/4" = 1'-0"

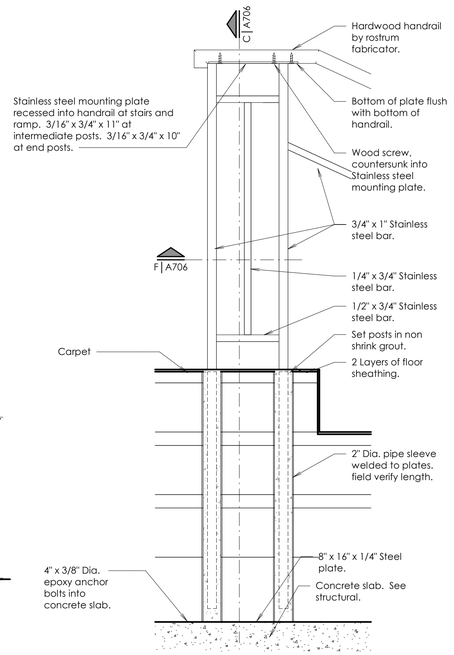

B Rostrum Riser Handrail Detail

Scale: 1 1/2" = 1'-0"

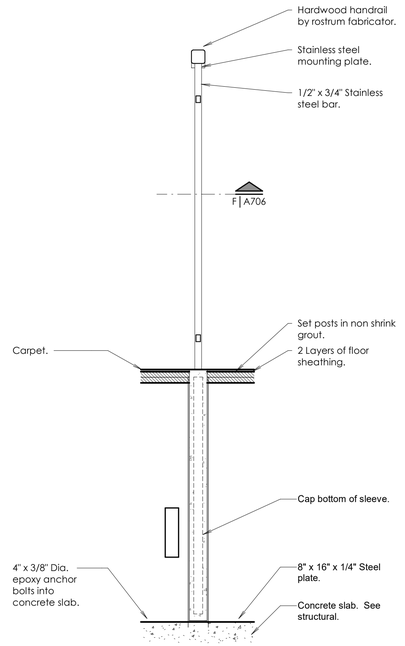

C Rostrum Riser Handrail Section

Scale: 1 1/2" = 1'-0"

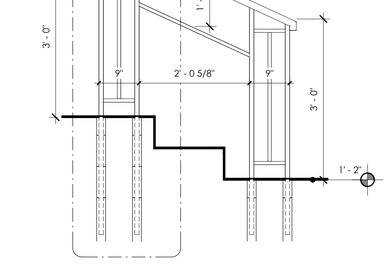

D Rostrum Riser Handrail Elev

Scale: 3/4" = 1'-0"

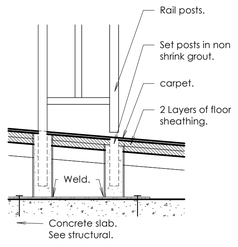

E Ramp Handrail Detail

Scale: 1 1/2" = 1'-0"

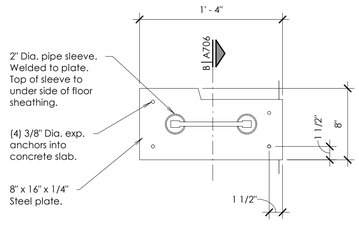

F Rostrum Riser Baluster Detail

Scale: 1 1/2" = 1'-0"

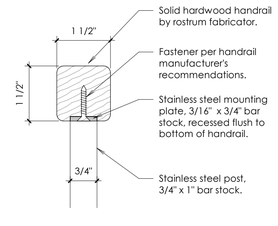

G Typical Handrail Detail

Scale: 6" = 1'-0"

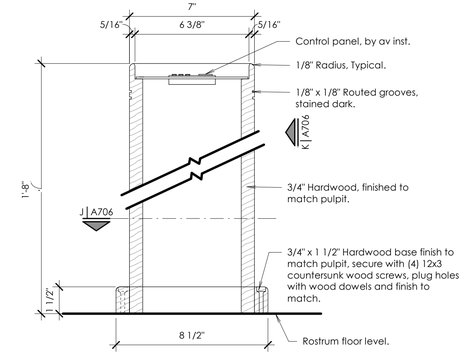

H Control Pedestal Section

Scale: 3" = 1'-0"

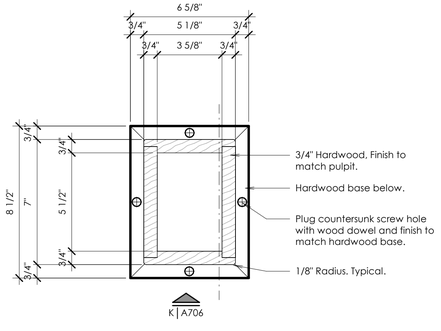

J Control Pedestal

Scale: 3" = 1'-0"

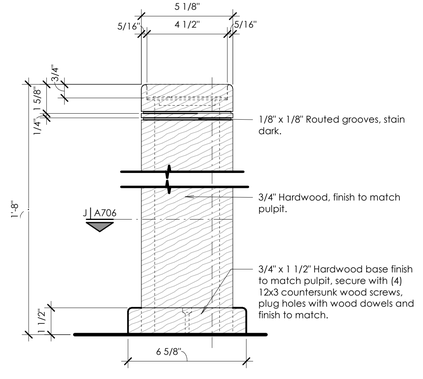

K Control Pedestal Section

Scale: 3" = 1'-0"

bhd ARCHITECTS
www.bhdarchitects.com
Phone 801.571.0010
Fax 801.571.0303
Toll Free 888.571.0010
65 East Wadsworth Park Drive
Suite 205 Draper, Utah 84020

LICENSED ARCHITECT Late Theodore Harris 6278-0301 23 MAY 2025 STATE OF UTAH

THE CHURCH OF JESUS CHRIST OF LATTER-DAY SAINTS

Nibley 6 & Nibley UT West Stake

Approx. 3410 South 1200 West, Nibley, Utah
41.670809, -111.860775

BHD #: 2403
County Parcel: 03:050:0016
Plan Series: Heritage 24
Owner #: 514-4728
Date: 29 May 2025

Drawing Issue and Revision Schedule

#	Date	Description

Rostrum Casework

A706

5/29/2025 9:34:40 AM

General Notes

1. Hardwood trim designation (T#) refer to G/A702
2. Furnish and install one freestanding lectern and one table top lectern.

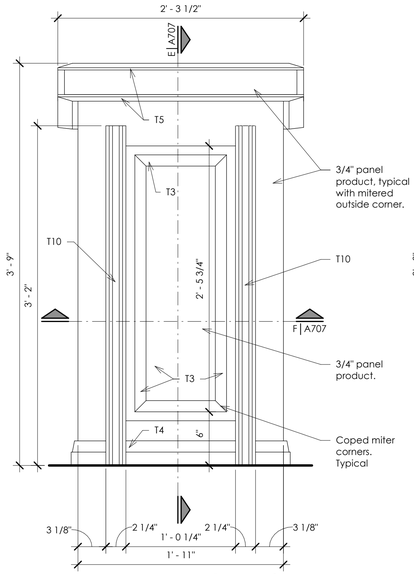

A Lectern Front Elevation

Scale: 1 1/2" = 1'-0"

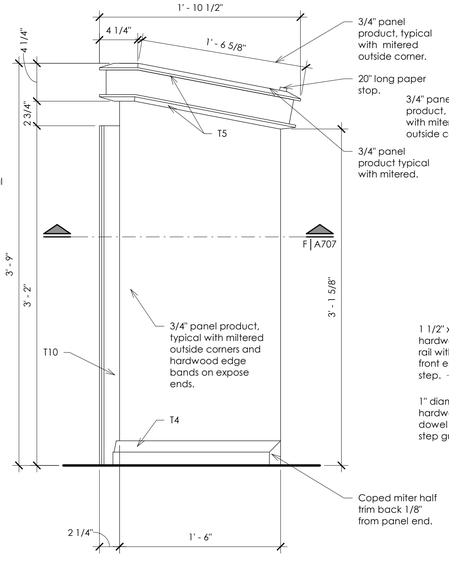

B Lectern Side Elevation

Scale: 1 1/2" = 1'-0"

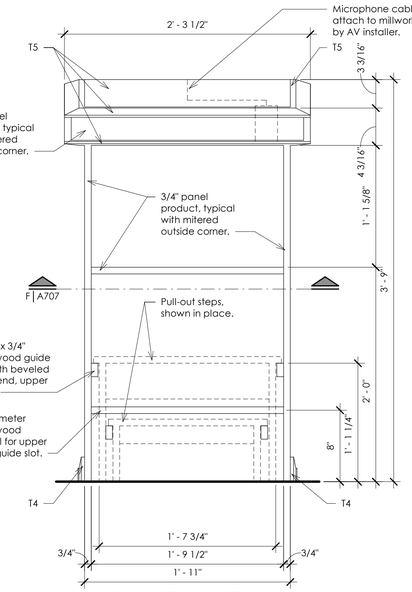

C Lectern Rear Elevation

Scale: 1 1/2" = 1'-0"

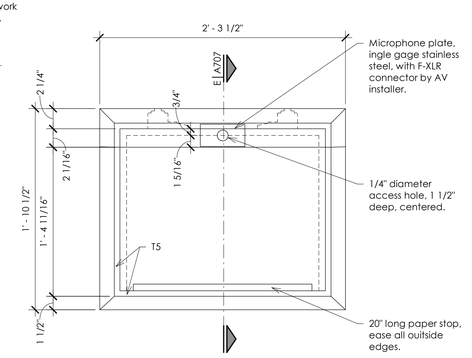

D Lectern Top

Scale: 1 1/2" = 1'-0"

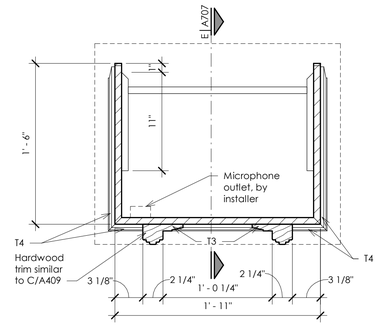

F Lectern Plan Section

Scale: 1 1/2" = 1'-0"

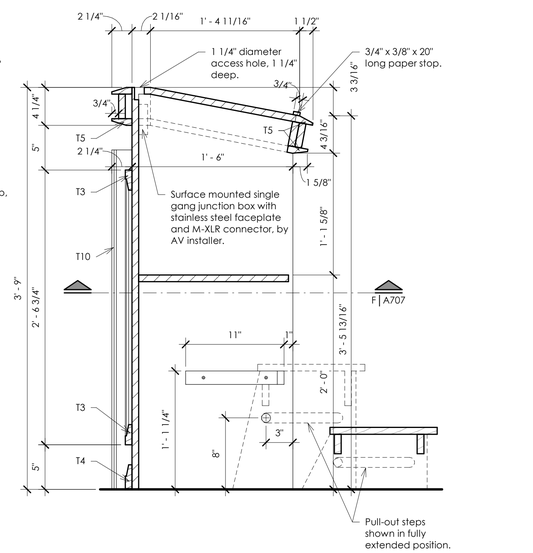

E Lectern Section

Scale: 1 1/2" = 1'-0"

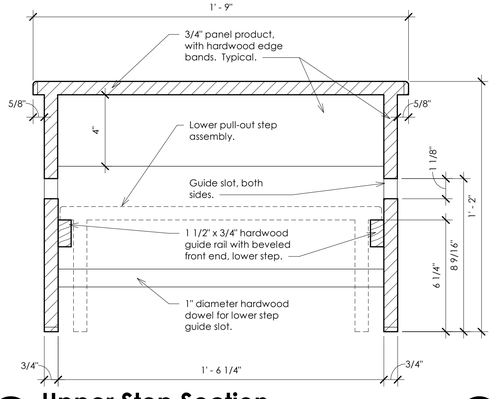

G Upper Step Section

Scale: 3" = 1'-0"

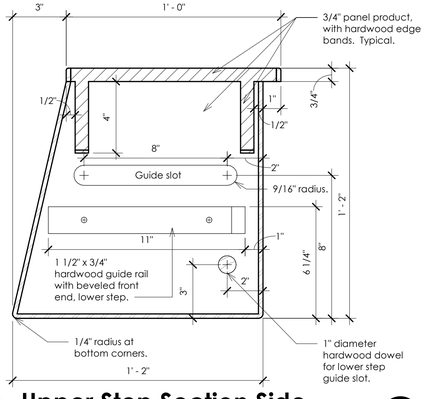

H Upper Step Section Side

Scale: 3" = 1'-0"

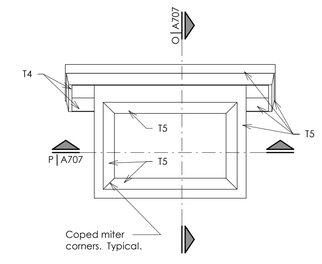

I Lectern Table Top Elevation

Scale: 1 1/2" = 1'-0"

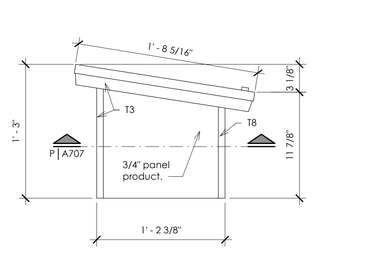

J Lectern Table Top Side Elevation

Scale: 1 1/2" = 1'-0"

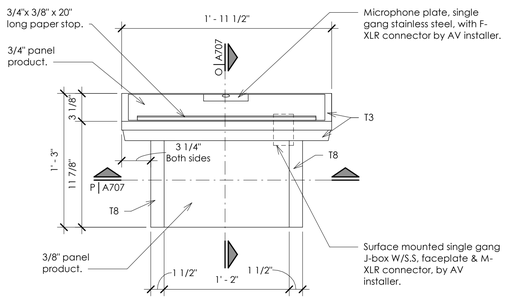

K Lectern Table Top Rear Elevation

Scale: 1 1/2" = 1'-0"

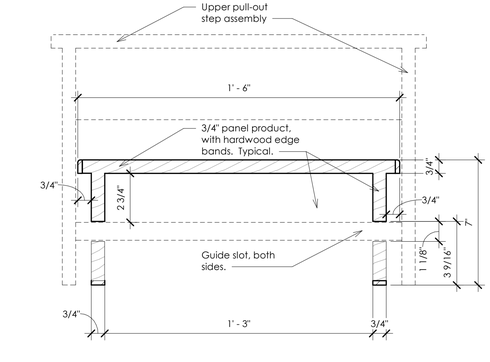

L Lower Step Section

Scale: 3" = 1'-0"

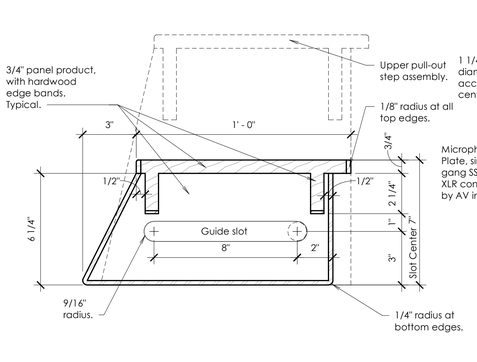

M Lower Step Section

Scale: 3" = 1'-0"

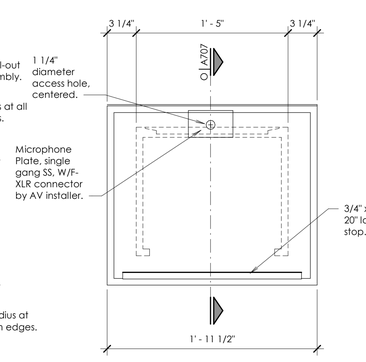

N Lectern Table Top

Scale: 1 1/2" = 1'-0"

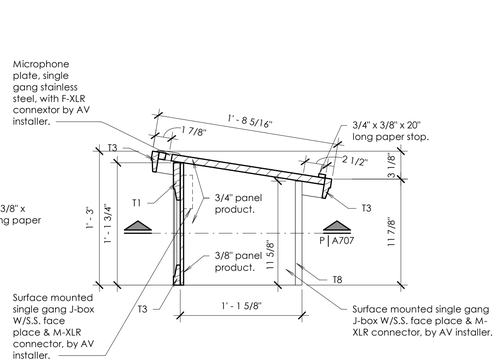

O Lectern Table Top Section

Scale: 1 1/2" = 1'-0"

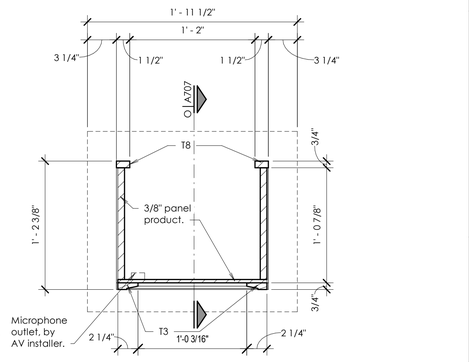

P Lectern Table Tp Plan Section

Scale: 1 1/2" = 1'-0"

5/29/2025 9:34:41 AM

bhd ARCHITECTS
www.bhdarchitects.com
Phone 801.571.0010
Fax 801.571.0303
Toll Free 888.571.0010
65 East Wadsworth Park Drive
Suite 205 Draper, Utah 84020

LICENSED ARCHITECT Lafe Theodore Harris 23 MAY 2025 6276578-0301 STATE OF UTAH

THE CHURCH OF JESUS CHRIST OF LATTER-DAY SAINTS

Nibley 6 & Nibley UT West Stake

Approx. 3410 South 1200 West, Nibley, Utah
41.670809, -111.860775

Owner #: 514-4728
Plan Series: Heritage 24
County Parcel: 03:050:0016
BHD #: 2403
Date: 29 May 2025

Drawing Issue and Revision Schedule

#	Date	Description

Lectern Details

A707

5/29/2025 9:36:21 AM

bhd ARCHITECTS

www.bhdarchitects.com

Phone 801.571.0010
Fax 801.571.0303
Toll Free 888.571.0010

65 East Wadsworth Park Drive
Suite 205 Draper, Utah 84020

LICENSED ARCHITECT
Late
Theodore
Harris
23 MAY 2025
6278-0301
STATE OF UTAH

THE CHURCH OF
JESUS CHRIST
OF LATTER-DAY SAINTS

Nibley 6 &
Nibley UT West Stake

Approx. 3410 South 1200 West, Nibley, Utah
41.670809, -111.860775

Date: 29 May 2025
BHD #: 2403
County Parcel: 03:050:0016
Plan Series: Heritage 24
Owner #: 514-4728

Drawing Issue and Revision Schedule

#	Date	Description

Exterior Perspectives

A901

5 **Perspective**
Scale:

2 **Perspective**
Scale:

1 **Perspective**
Scale:

6 **Perspective**
Scale:

5/29/2025 9:38:22 AM

bhd ARCHITECTS
www.bhdarchitects.com
Phone 801.571.0010
Fax 801.571.0303
Toll Free 888.571.0010
65 East Wadsworth Park Drive
Suite 205 Draper, Utah 84020

LICENSED ARCHITECT
Lafe Theodore Harris
29 May 2025
6928898-0301
STATE OF UTAH

THE CHURCH OF
JESUS CHRIST
OF LATTER-DAY SAINTS

Nibley 6 &
Nibley UT West Stake

Approx. 3410 South 1200 West, Nibley, Utah
41.670809, -111.860775

Date:	BHD #:	County Parcel:	Plan Series:	Owner #:
29 May 2025	2403	03:050:0016	Heritage 24	514-4728

Drawing Issue and Revision Schedule

#	Date	Description

Interior Perspectives

A902

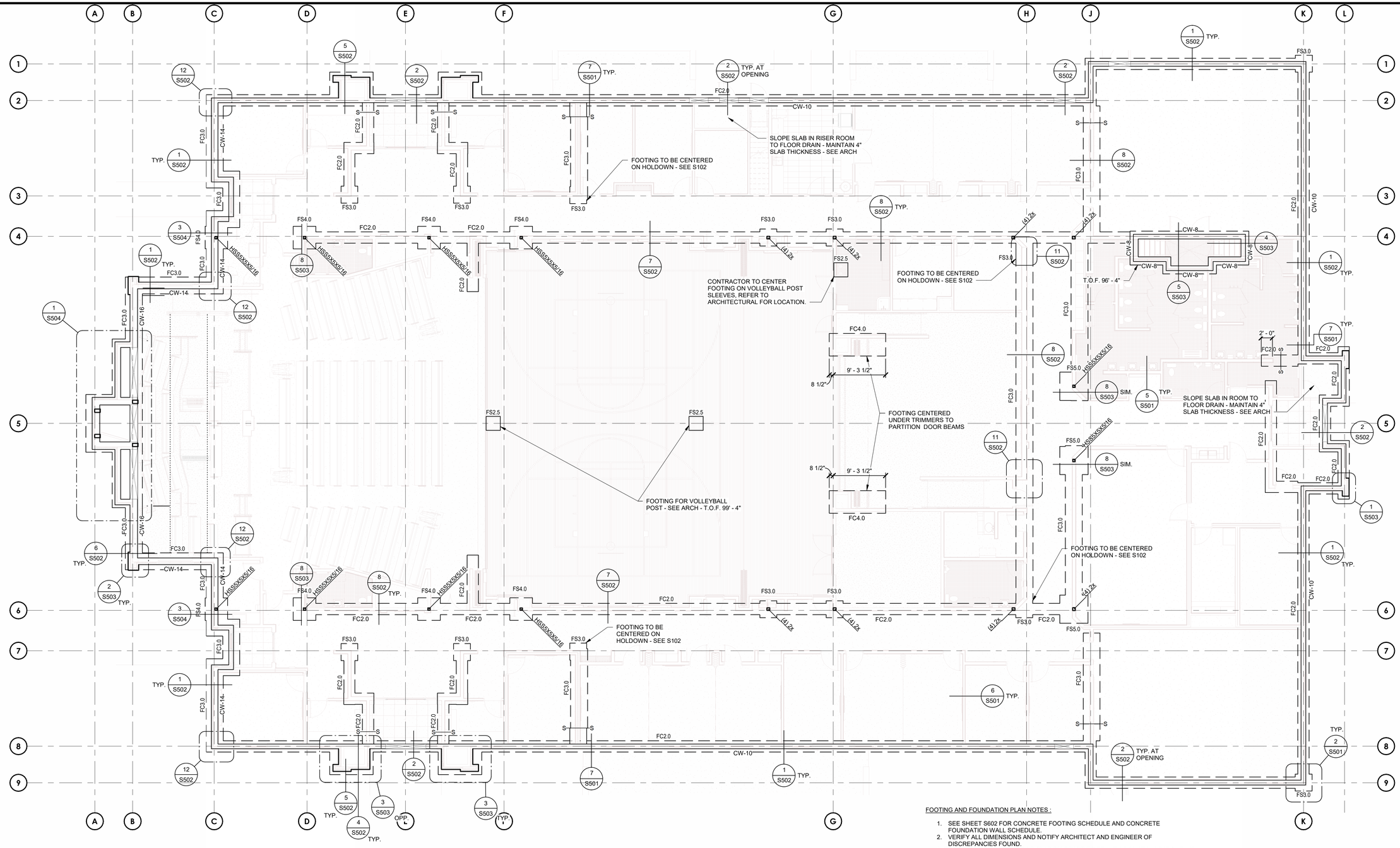

FOOTING AND FOUNDATION PLAN

SCALE : 1/8" = 1'-0"

1 / S101

FOOTING AND FOUNDATION PLAN NOTES :

1. SEE SHEET S602 FOR CONCRETE FOOTING SCHEDULE AND CONCRETE FOUNDATION WALL SCHEDULE.
2. VERIFY ALL DIMENSIONS AND NOTIFY ARCHITECT AND ENGINEER OF DISCREPANCIES FOUND.
3. INTERIOR CONCRETE FLOOR SLAB ON GRADE TO BE 4" THICK WITH #4 BARS AT 18" ON CENTER EACH WAY WITH 1" CLEAR TO TOP SURFACE.
4. NO CONTROL JOINTS ALLOWED IN INTERIOR CONCRETE SLAB ON GRADE UNLESS APPROVED BY ARCHITECT.
5. FINISH FLOOR ELEVATION IS 100'-0".
6. SEE DETAIL 1/S501 FOR TYPICAL PIPE PERPENDICULAR AND PARALLEL TO FOOTING DETAIL.
7. SEE DETAIL 2/S501 FOR TYPICAL REINFORCING AT INTERSECTIONS IN CONCRETE WALLS.
8. SEE DETAIL 3/S501 FOR TYPICAL SILL PLATE BOLTING DETAIL.
9. SEE DETAIL 4/S501 FOR TYPICAL STEPPED FOOTING DETAILS.
10. SEE DETAIL 8/S501 FOR TYPICAL SLAB ON GRADE DETAIL.
11. SEE ARCH FOR RECESED FLOOR SLAB AREAS. SEE 5/S501, AND 7/S502 FOR DETAIL AT STEP IN SLAB. REFER TO ARCHITECTURAL DRAWINGS FOR DIMENSIONS.
12. RECESS FOUNDATION WALL 8" AT DOORWAYS AND POUR SLAB THRU OPENINGS. SEE 2/S502.
13. SEE DETAIL 9/S501 WHERE SPOT FOOTINGS AND CONTINUOUS FOOTINGS ARE PLACED AT DIFFERENT TIMES.
14. SEE DETAIL 10/S501 FOR TYPICAL FOOTING OVER COMPACTED STRUCTURAL FILL.
15. ALL DIMENSIONS TO STUD WALLS ARE TO FACE OF STUD WALL.
16. SPOT FOOTINGS ARE TO BE CENTERED UNDER COLUMN OR HOLDOWN.
17. TOP OF EXTERIOR FOOTING 98'-0" TYPICAL UNLESS NOTED OTHERWISE AT ALL EXTERIOR FOOTINGS.
18. TOP OF INTERIOR FOOTINGS 99'-6" TYPICAL UNLESS NOTED OTHERWISE AT ALL INTERIOR FOOTINGS.
19. SEE LEGEND ON S601 FOR SYMBOLS AND ABBREVIATIONS.
20. SEE SHEET S102 AND DETAIL 9/S502 FOR HOLDOWNS

bhd ARCHITECTS
www.bhdarchitects.com
Phone 801.571.0010
Fax 801.571.0303
Toll Free 888.571.0010
65 East Wadsworth Park Drive
Suite 205 Draper, Utah 84020

Matthew C. McBride No. 353893 5/29/25 STATE OF UTAH

ARW ENGINEERS

THE CHURCH OF JESUS CHRIST OF LATTER-DAY SAINTS

Nibley 6 &
Nibley UT West Stake

Approx. 3410 South 1200 West, Nibley, Utah
41.670809, -111.840775

BHD #: 2403
County Parcel: 03:050:0016
Plan Series: Heritage 24
Owner #: 514-4728
Date: 29 May 2025

Drawing Issue and Revision Schedule

#	Date	Description
1	29 May 2025	Bid Documents

Footing and Foundation Plan

S101

C:\Users\jackson\Documents\S-25705 - Nibley 6 - Her 24 - 2025_jacksonOEM82.rvt
5/20/2025 3:09:26 PM

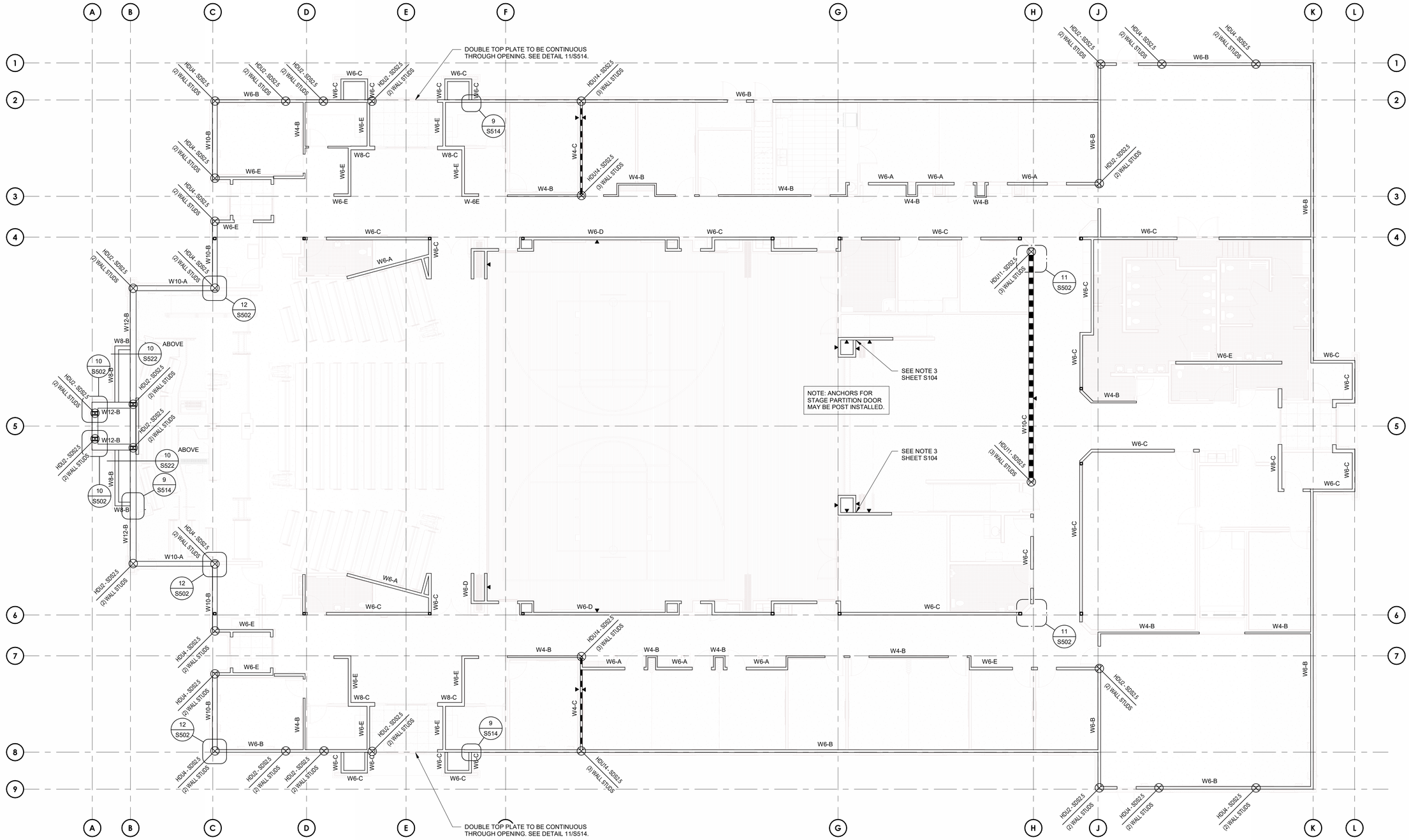

ANCHOR BOLT, HOLD-DOWN, AND WALL TYPE PLAN

SCALE : 1/8" = 1'-0"

1 / S102

ANCHOR BOLT, HOLDOWN AND WALL TYPE PLAN NOTES:

1. SEE DETAIL 1/S521 FOR TYPICAL TOP PLATE SPLICE DETAIL.
2. SEE DETAIL 2/S521 FOR TOP PLATE SPLICE PENETRATION SCHEDULE.
3. SEE DETAIL 3/S521 AND DETAIL 4/S521 FOR WALL PENETRATIONS.
4. SEE WOOD BEAM SCHEDULE ON SHEET S603 FOR BEAM INFORMATION.
5. SEE SCHEDULES ON S604 FOR WALL, ROOF FLOOR SHEATHING AND NAILING REQUIREMENTS.
6. FOR UNMARKED INTERIOR HEADERS, USE (3) 2x6 FOR 2x6 WALLS AND (2) 2x6 FOR 2x4 WALLS. USE (1) BEARING AND (1) KING STUD.
7. SEE DETAILS 5/S521, 6/S521, AND 7/S521 FOR BRACING AT NON-STRUCTURAL WALLS.
8. SEE SHEET S502 AND S503 FOR ANCHOR AND HOLDOWN DETAILS AND SCHEDULE.
9. SEE SHEET S603 FOR STRUCTURAL WOOD WALL SCHEDULE.
10. SEE SHEET S502 AND S503 FOR ADDITIONAL FOOTING AND FOUNDATION WALL INFORMATION AT WALL POP-OUTS.
11. SEE ARCHITECTURAL FOR NON-STRUCTURAL WALLS.
12. SEE LEGEND ON S601 FOR SYMBOLS AND ABBREVIATIONS.
13. WOOD SHEATHING APPLIED ON OUTSIDE FACE OF ALL EXTERIOR WALLS.
14. BUILT-UP COLUMN FOR BM-21, STEEPLE SUPPORT BEAMS.
15. USE HDU2-SDS2.5 WITH (2) WALL STUDS, AND 5/8" DIAMETER ANCHOR.

bhd ARCHITECTS
www.bhdarchitects.com
Phone 801.571.0010
Fax 801.571.0303
Toll Free 888.571.0010
65 East Wadsworth Park Drive
Suite 205 Draper, Utah 84020

Matthew C. McBride No. 353893 5/29/25 STATE OF UTAH

ARW ENGINEERS

THE CHURCH OF JESUS CHRIST OF LATTER-DAY SAINTS

Nibley 6 & Nibley UT West Stake

Approx. 3410 South 1200 West, Nibley, Utah
41.670809, -111.860775

BHD #: 2403
County Parcel: 03:050:0016
Plan Series: Heritage 24
Owner #: 514-4728
Date: 29 May 2025

Drawing Issue and Revision Schedule

#	Date	Description
1	29 May 2025	Bid Documents

Anchor Bolt, Holdown, and Wall Type Plan

S102

C:\Users\jackson\Documents\S-25705 - Nibley 6 - Her 24 - 2025_jacksonQEWB2.rvt
5/20/2025 3:09:29 PM

ROSTRUM FRAMING PLAN NOTES:

1. SEE SHEATHING TYPE AND NAILING SCHEDULE ON SHEET S604 FOR FLOOR SHEATHING AND NAILING REQUIREMENTS.
2. SEE ARCHITECTURAL FOR DIMENSIONS AND ELEVATIONS.
3. SEE S102, NOTE 14, FOR COLUMN FORMATION.

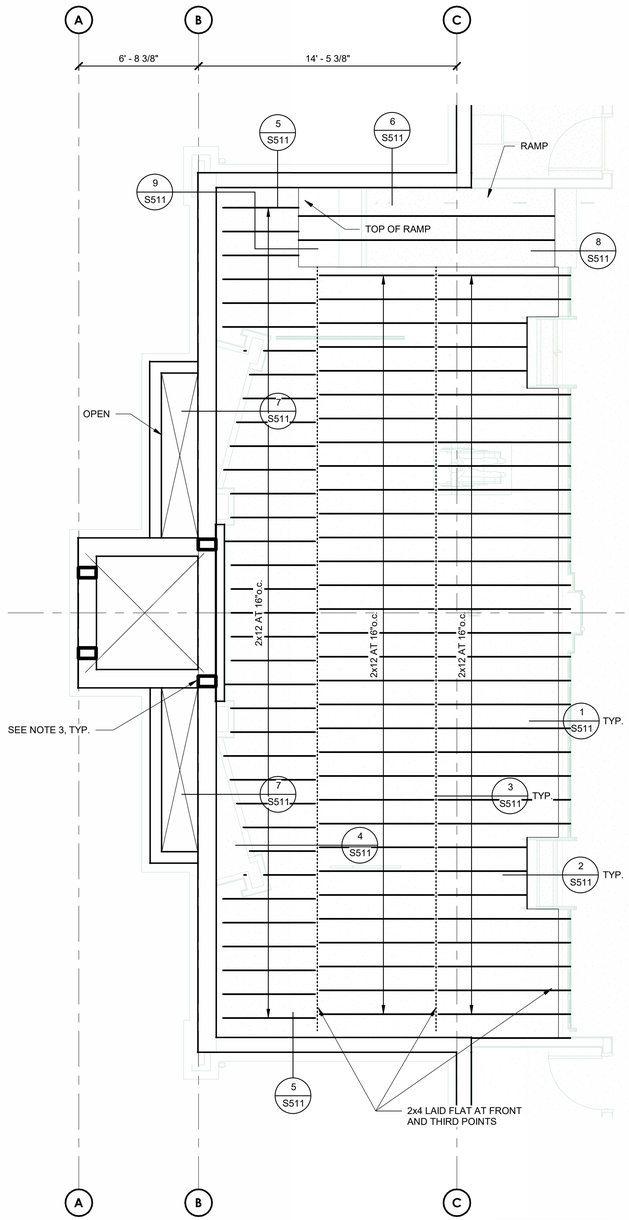

ROSTRUM LOADING (ALL LEVELS)
DEAD LOAD = 15 psf LIVE LOAD = 100 psf TOTAL LOAD = 115 psf

ROSTRUM FRAMING LEVEL 1 PLAN
SCALE : 1/4" = 1'-0"
1 S103

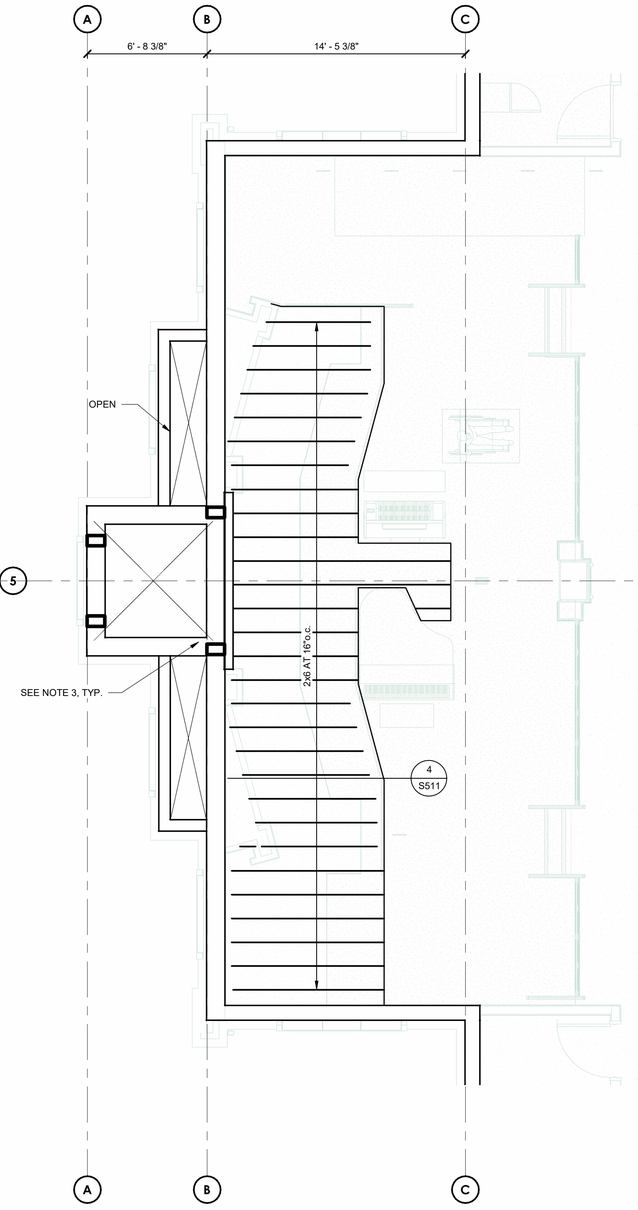

ROSTRUM FRAMING LEVEL 2 PLAN
SCALE : 1/4" = 1'-0"
2 S103

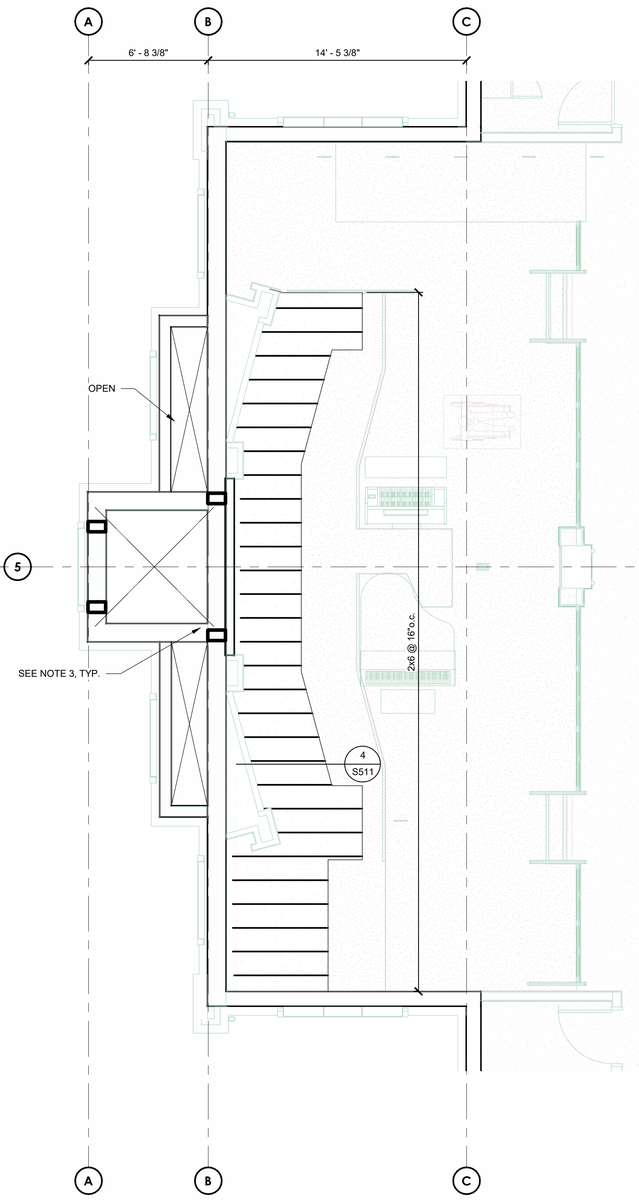

ROSTRUM FRAMING LEVEL 3 PLAN
SCALE : 1/4" = 1'-0"
3 S103

bhd ARCHITECTS
www.bhdarchitects.com
Phone 801.571.0010
Fax 801.571.0303
Toll Free 888.571.0010
65 East Wadsworth Park Drive
Suite 205 Draper, Utah 84020

PROFESSIONAL STRUCTURAL ENGINEER
Matthew C. McBride
No. 353893
5/29/25
STATE OF UTAH

ARW ENGINEERS

THE CHURCH OF JESUS CHRIST OF LATTER-DAY SAINTS

Nibley 6 &
Nibley UT West Stake

Approx. 3410 South 1200 West, Nibley, Utah
41.672809, -111.860775

BHD #: 2403
County Parcel: 03:050:0016
Plan Series: Heritage 24
Owner #: 514-4728
Date: 29 May 2025

Drawing Issue and Revision Schedule

#	Date	Description
1	29 May 2025	Bid Documents

Rostrum Framing Plan

S103

C:\Users\jackson\Documents\S-25705 - Nibley 6 - Her 24 - 2025_jackson@BMB2.rvt
5/20/2025 3:09:31 PM

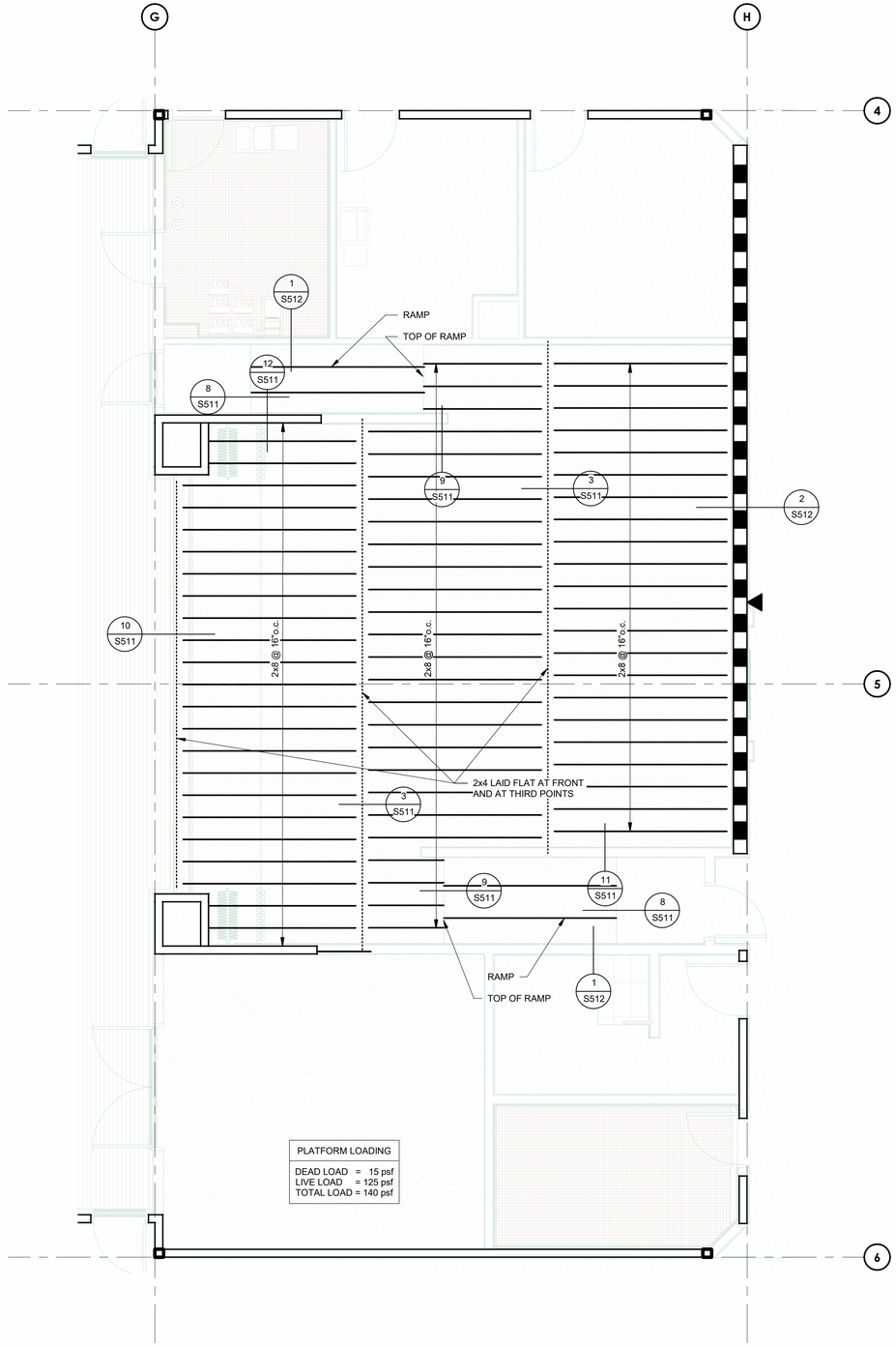

PLATFORM FRAMING PLAN

SCALE : 1/4" = 1'-0"

1
S104

ROSTRUM FRAMING AND PLATFORM FRAMING PLAN NOTES:

1. SEE SHEATHING TYPE AND NAILING SCHEDULE ON SHEET S604 FOR FLOOR SHEATHING AND NAILING REQUIREMENTS.
2. SEE ARCHITECTURAL FOR DIMENSIONS AND ELEVATIONS.
3. SHEATH INSIDE OF WALL BETWEEN GLULAMS FOR STABILITY OF BEAMS ABOVE.

bhd ARCHITECTS
www.bhdarchitects.com
Phone 801.571.0010
Fax 801.571.0303
Toll Free 888.571.0010
65 East Wadsworth Park Drive
Suite 205 Draper, Utah 84020

PROFESSIONAL STRUCTURAL ENGINEER
Matthew C. McBride
No. 353893
5/20/25
STATE OF UTAH

ARW ENGINEERS

THE CHURCH OF
JESUS CHRIST
OF LATTER-DAY SAINTS

Nibley 6 &
Nibley UT West Stake

Approx. 3410 South 1200 West, Nibley, Utah
41.672809, -111.866775

BHD #: 2403
County Parcel: 03:050:0016
Plan Series: Heritage 24
Owner #: 514-4728
Date: 29 May 2025

Drawing Issue and Revision Schedule

#	Date	Description
1	29 May 2025	Bid Documents

Platform Framing Plan

S104

C:\Users\jackson\Documents\S-25705 - Nibley 6 - Her 24 - 2025_jackson@BMB2.rvt
5/20/2025 3:09:32 PM

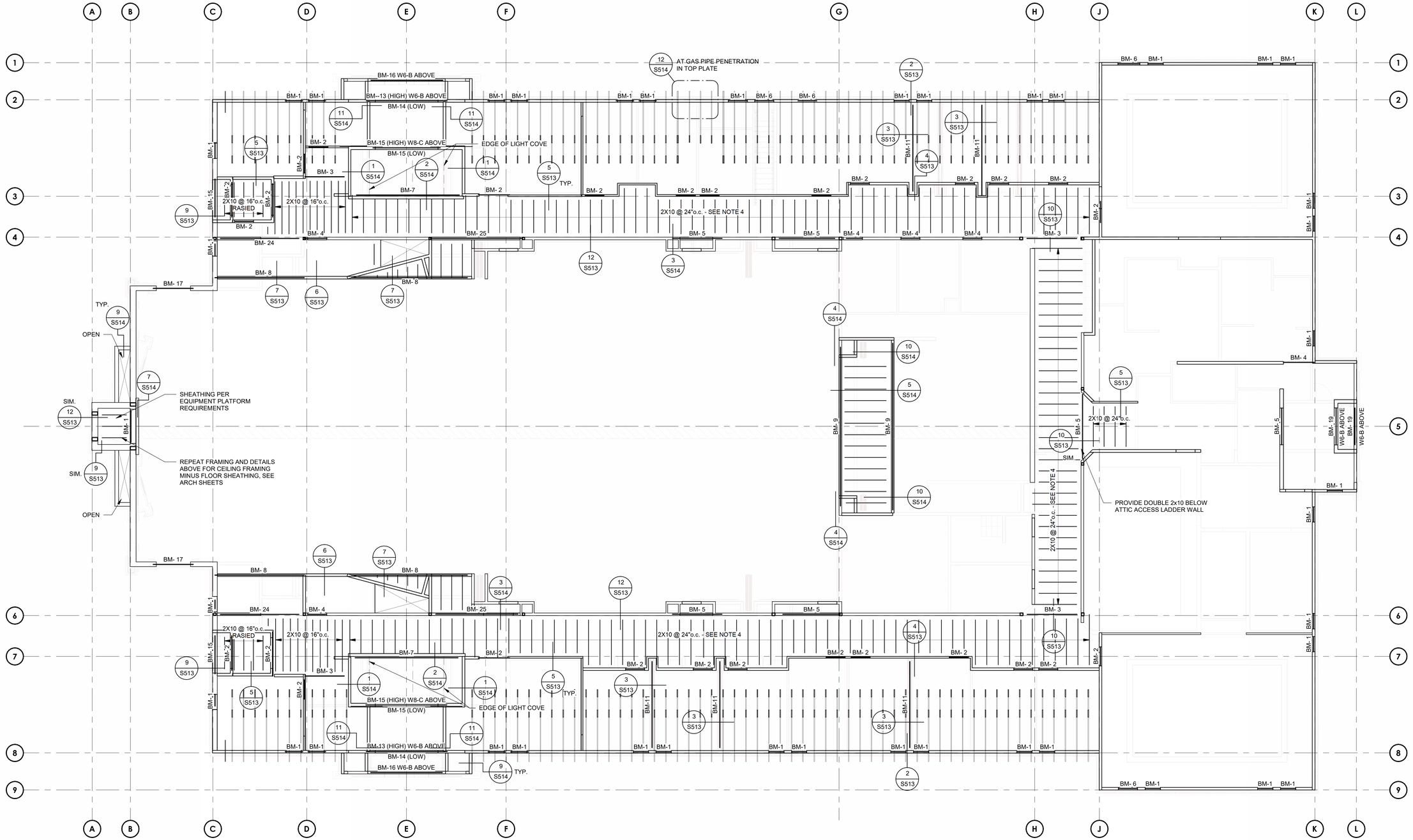

EQUIPMENT PLATFORM FRAMING PLAN

SCALE : 1/8" = 1'-0"

1
S105

EQUIPMENT PLATFORM LOADING
DEAD LOAD = 15 psf
LIVE LOAD = 40 psf
TOTAL LOAD = 55 psf

EQUIPMENT PLATFORM FRAMING PLAN NOTES:

1. SEE SHEATHING TYPE AND NAILING SCHEDULE ON SHEET S604 FOR FLOOR SHEATHING AND NAILING REQUIREMENTS.
2. SEE ARCHITECTURAL FOR DIMENSIONS AND ELEVATIONS.
3. SHEATH WALL TO PROVIDE STABILITY FOR CURTAIN GLULAM BEAMS.
4. COORDINATE FRAMING LOCATIONS TO ALLOW FOR RECESSED LIGHTING - SEE ARCH.

bhd ARCHITECTS
www.bhdarchitects.com
Phone 801.571.0010
Fax 801.571.0303
Toll Free 888.571.0010
65 East Wadsworth Park Drive
Suite 205 Draper, Utah 84020

PROFESSIONAL STRUCTURAL ENGINEER
Matthew C. McBride
No. 353893
5/29/25
STATE OF UTAH

ARW ENGINEERS

THE CHURCH OF
JESUS CHRIST
OF LATTER-DAY SAINTS

Nibley 6 & Nibley UT West Stake

Approx. 3410 South 1200 West, Nibley, Utah
41.670809, -111.860775

Date:	BHD #:	County Parcel:	Plan Series:	Owner #:
29 May 2025	2403	03050:0016	Heritage 24	514-4728

Drawing Issue and Revision Schedule

#	Date	Description
1	29 May 2025	Bid Documents

Equipment Platform Framing Plan

S105

C:\Users\jacksonp\Documents\S-25705 - Nibley 6 - Her 24 - 2025_jacksonpQEM82.rvt

5/20/2025 3:09:34 PM

HIGH ROOF FRAMING PLAN

SCALE : 1/8" = 1'-0"

1 / S106

HIGH ROOF FRAMING PLAN NOTES :

1. SEE DETAIL 1/S521 FOR TYPICAL TOP PLATE SPLICE DETAIL.
2. SEE DETAIL 2/S521 FOR TOP PLATE SPLICE DETAIL FOR PIPES THAT PENETRATE TOP PLATES.
3. SEE DETAILS 3/S521 AND 4/S521 FOR WALL PENETRATIONS.
4. SEE WOOD BEAM SCHEDULE ON S603 FOR BUILT-UP BEAM DETAIL.
5. SEE SCHEDULE ON SHEETS S603 AND S604 FOR WALL, ROOF, AND FLOOR SHEATHING AND NAILING REQUIREMENTS.
6. SEE ARCHITECTURAL PLANS FOR ROOF AND BEARING WALL ELEVATIONS.
7. FOR UNMARKED INTERIOR HEADERS, USE (3) 2x6 FOR 2x6 WALLS AND (2) 2x6 FOR 2x4 WALLS. USE (1) BEARING AND (1) KING STUD.
8. SEE 5/S521, 6/S521, AND 7/S521 FOR BRACING AT NON-BEARING WALLS.
9. ALL TRUSSES SPACED AT 2'-0"o.c., UNLESS NOTED OTHERWISE.
10. ADD 750# POINT LOAD TO EACH OF (6) TRUSSES SUPPORTING BASKETBALL STANDARD.
11. (2) 2x12 x 12'-0" LONG SUPPORTS WITH (2) 19/32" WOOD FILLERS.
12. MULTI-PLY GIRDER TRUSS PER MANUFCATURER. SEE TR-3 PROFILE, SEE 8/S524.
13. [ ] TYPE 1 BLOCKED DIAPHRAGM, SEE SCHEDULE E ON S604.
14. 2-PLY MINIMUM DRAG TRUSS. TRUSS MANUFACTURER TO DESIGN TRUSS FOR 320plf ASD. ALIGN FACE OF 2-PLY TRUSS ON INTERIOR FACE OF WALL ON GRID C. SEE DETAIL 3/S524.
15. BELOW MULTI-PLY TRUSSES, PROVIDE ONE TRIMMER STUD BELOW EACH PLY OF TRUSS.
16. ADJUST TRUSS LAYOUT TO ALLOW FOR HANGING WALLS, RECESSED LIGHTING AND INTERIOR SHEAR WALLS.
17. [XXX] OVERBUILD AREAS
18. AT OVERBUILD / DORMER LOCATIONS, USE THE FOLLOWING JOISTS:
    UP TO 4'-8" SPAN 2x6 AT 24"o.c.
    4'-10" TO 9'-6" SPAN 2x8 AT 24"o.c.
19. AT OVERBUILD LOCATIONS, USE THE FOLLOWING AT HIPS / RIDGES:
    UP TO 8'-0" SPAN (2) 2x8
    8'-0" TO 12'-0" SPAN (2) 2x10
    FOR SPANS GREATER THAN 12'-0", USE PONY WALLS.

bhd ARCHITECTS
www.bhdarchitects.com
Phone 801.571.0010
Fax 801.571.0303
Toll Free 888.571.0010
65 East Wadsworth Park Drive
Suite 205 Draper, Utah 84020

Matthew C. McBride No. 353893 5/29/25 STATE OF UTAH

ARW ENGINEERS

THE CHURCH OF JESUS CHRIST OF LATTER-DAY SAINTS

Nibley 6 & Nibley UT West Stake

Approx. 3410 South 1200 West, Nibley, Utah
41.670809, -111.840775

BHD #: 2403
County Parcel: 03:050:0016
Plan Series: Heritage 24
Owner #: 514-4728
Date: 29 May 2025

Drawing Issue and Revision Schedule

#	Date	Description
1	29 May 2025	Bid Documents

High Roof Framing Plan

S106

C:\Users\jackson\Documents\S-25705 - Nibley 6 - Her 24 - 2025_jacksonQEM82.rvt

5/20/2025 3:09:36 PM

ENLARGED ROOF FRAMING PLAN NOTES:

1. SEE S106 FOR GENERAL ROOF FRAMING NOTES.
2. TYPE 1 BLOCKED DIAPHRAGM, SEE SCHEDULE E ON S604.
3. TRUSS MANUFACTURER TO ADJUST TRUSS SPACING, WOOD STRENGTH, ETC. TO SUPPORT THE BALANCED SNOW AND DRIFT SNOW LOADS. CONTRACTOR AND TRUSS MANUFACTURER TO TAKE NOTE OF THE HEAVY DRIFT LOAD. DESIGN OF THIS TRUSS REQUIRES THOROUGH CONSIDERATION.
4. PROVIDE ONE TRIMMER STUD BELOW EACH PLY OF MULTI-PLY TRUSS.

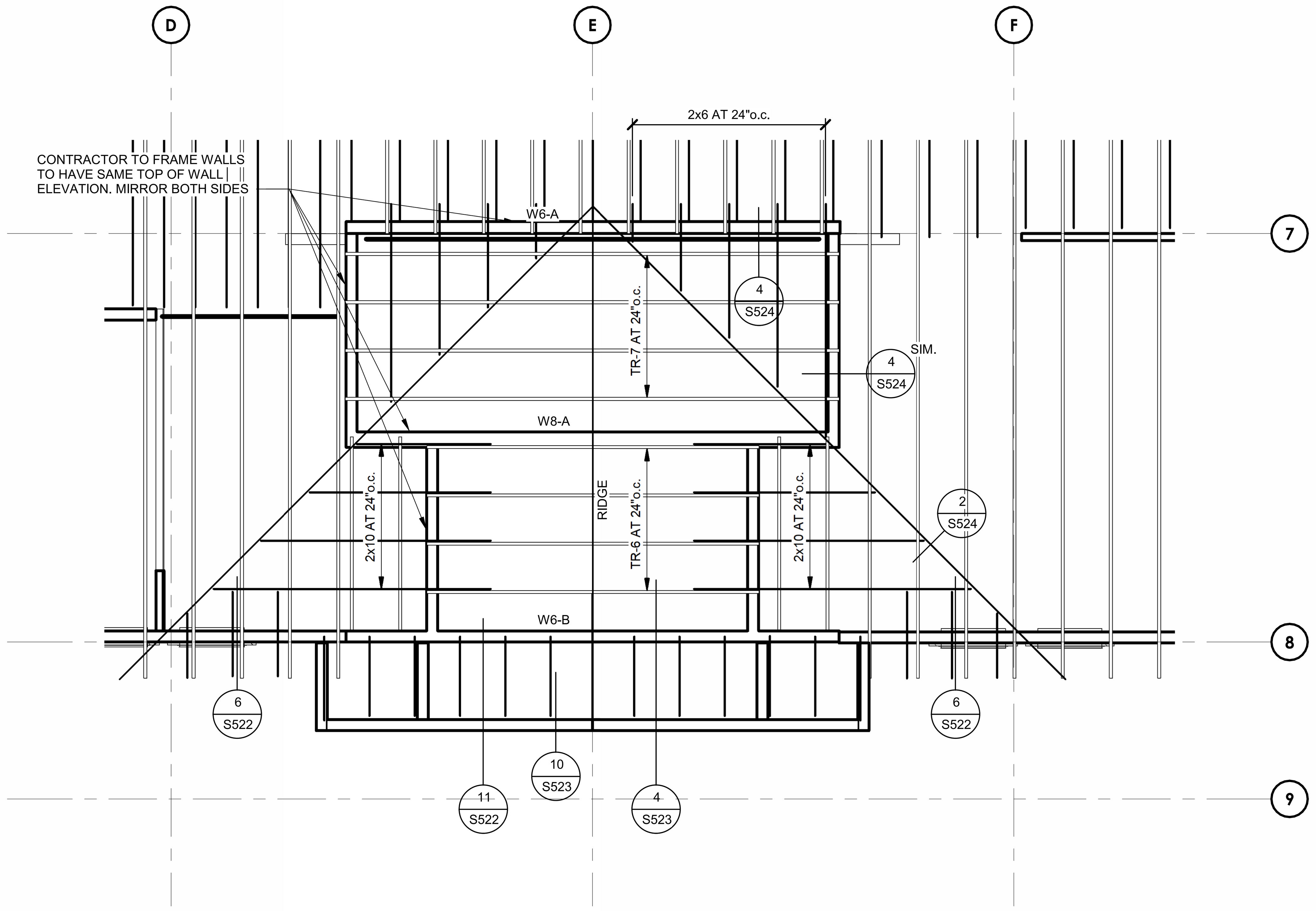

ENLARGED ENTRY ROOF FRAMING

SCALE : 1/4" = 1'-0"

1 S107

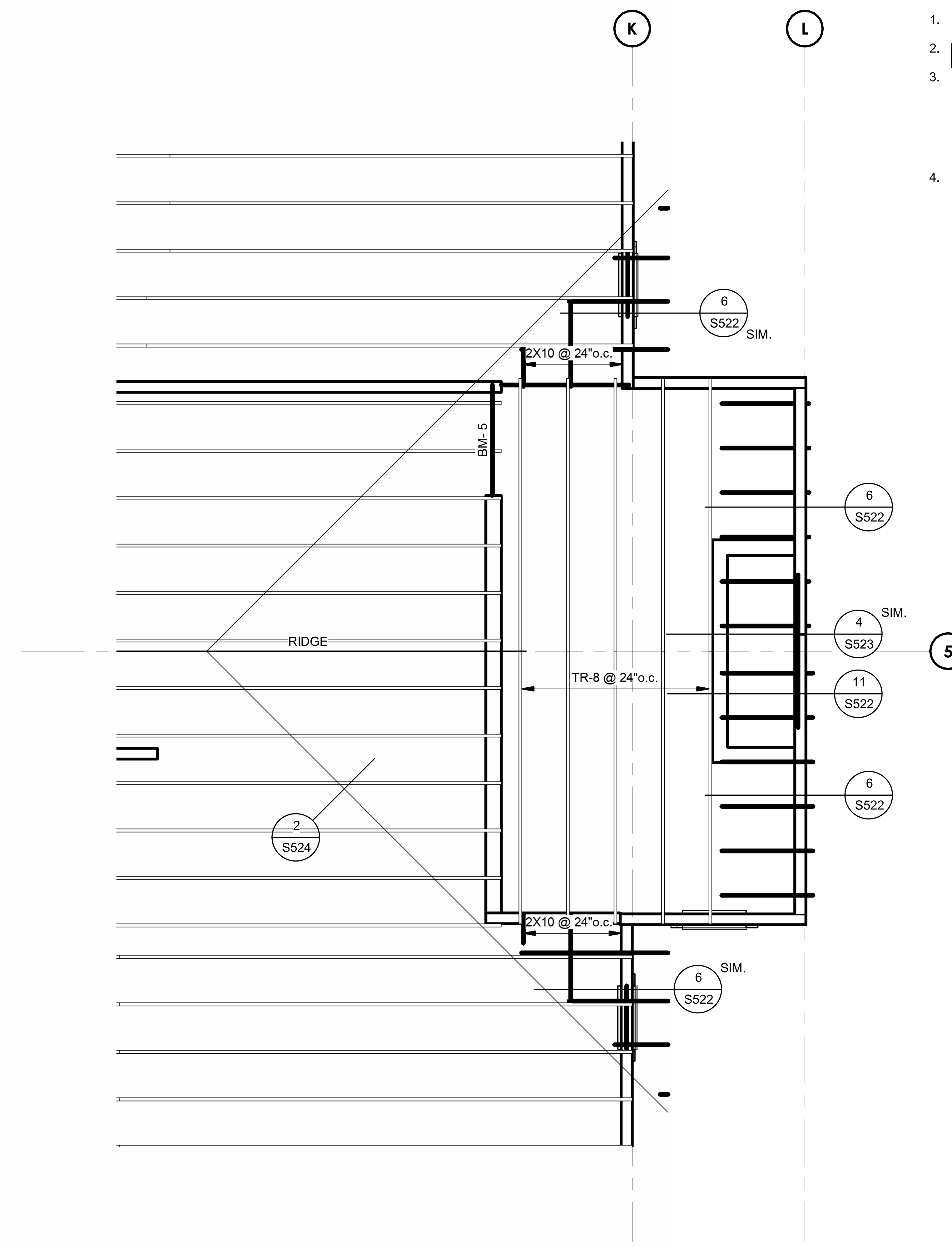

ENLARGED ENTRY ROOF FRAMING

SCALE : 1/4" = 1'-0"

2 S107

bhd ARCHITECTS
www.bhdarchitects.com
Phone 801.571.0010
Fax 801.571.0303
Toll Free 888.571.0010
65 East Wadsworth Park Drive Suite 205 Draper, Utah 84020

Matthew C. McBride No. 353893 5/29/25 STATE OF UTAH

ARW ENGINEERS

THE CHURCH OF JESUS CHRIST OF LATTER-DAY SAINTS

Nibley 6 & Nibley UT West Stake

Approx. 3410 South 1200 West, Nibley, Utah 41.670809, -111.860775

Date: 29 May 2025 | BHD #: 2403 | County Parcel: 035050016 | Plan Series: Heritage 24 | Owner #: 514-4728

Drawing Issue and Revision Schedule

#	Date	Description
1	29 May 2025	Bid Documents

Enlarged Roof Framing Plan

S107

C:\Users\jacksonp\Documents\S-25705 - Nibley 6 - Her 24 - 2025_jacksonpQEMB2.rvt

5/20/2025 3:09:37 PM

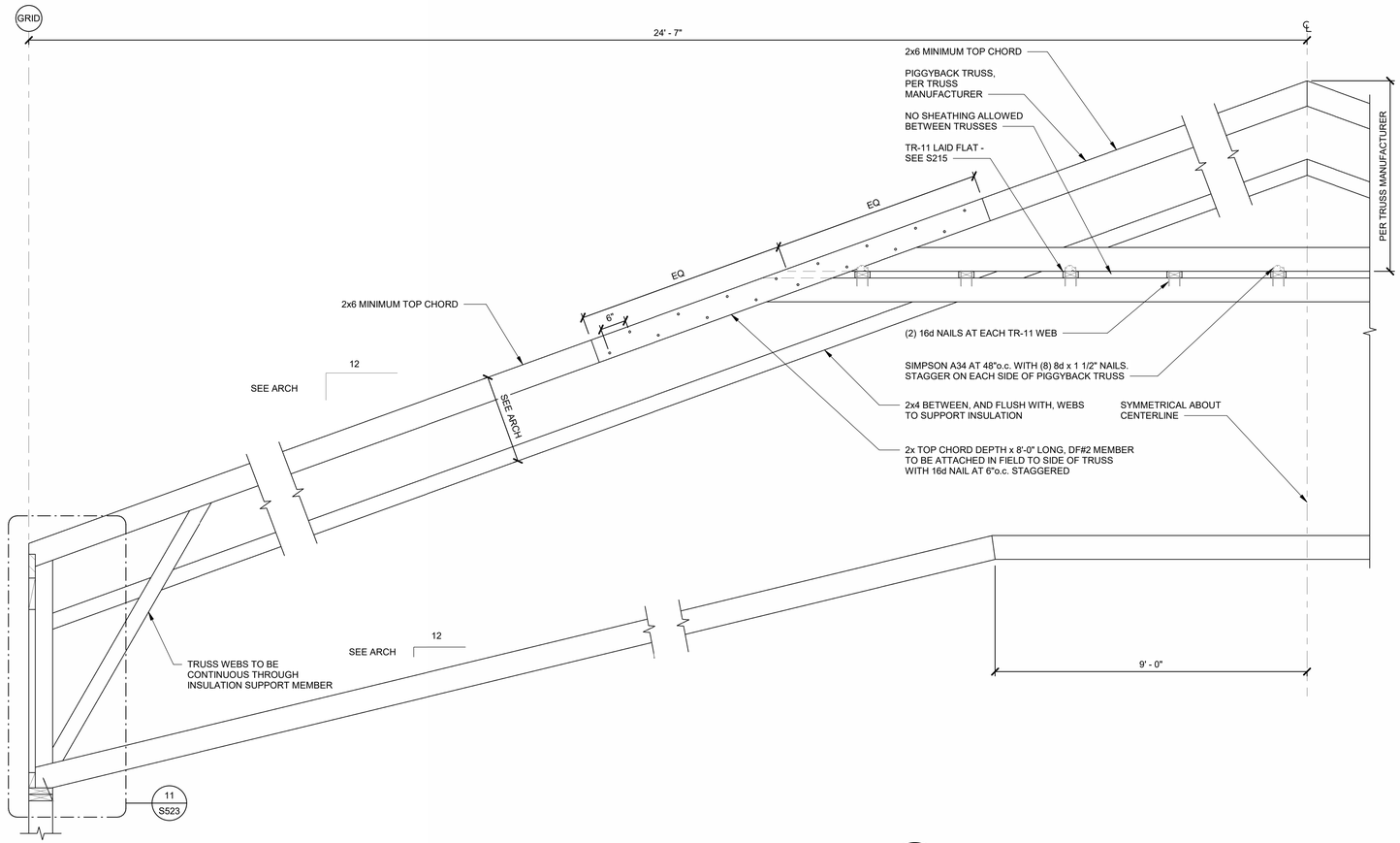

TR-1 TRUSS ELEVATION

SCALE : NONE

1
S201

TR-1 TRUSS LOADS (ASD)					
A	B	C	D	E	F
BALANCED SNOW/ROOF LIVE LOAD (plf)	TOP CHORD DEAD LOAD (plf)	WINDWARD LOAD (plf)	LEEWARD LOAD (plf)	LEEWARD EXTENT (FT"-IN" LOAD (plf)	BOTTOM CHORD LOAD (plf)
67	30	20	45	8'-3"	10

TR-1 TRUSS NOTES:

1. SEE S201 FOR GENERAL TRUSS NOTES.

TR-1 LOAD COMBINATIONS

COMBINATION LOAD 1: LOAD DIAGRAMS 1,3
COMBINATION LOAD 2: LOAD DIAGRAMS 2,3

TR-1 LOAD DIAGRAMS

LOAD DIAGRAM 1 - TOP CHORD

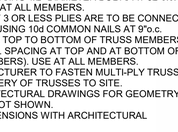

LOAD DIAGRAM 2 - TOP CHORD

NOTE: TRUSS TO SUPPORT LOADS AS SHOWN AND AS MIRRORED.

LOAD DIAGRAM 3 - BOTTOM CHORD

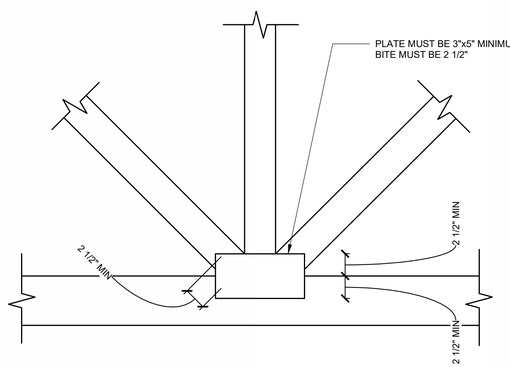

TYPICAL GUSSET TO TRUSS SCHEMATIC

SCALE : NONE

2
S201

GENERAL TRUSS NOTES:

1. TRUSS WEBS ARE NOT SHOWN, SEE TRUSS SUPPLIER DRAWINGS FOR TRUSS CONFIGURATION.
2. 2x6 MEMBERS SUPPORTING INSULATION MAY BE ATTACHED TO THE TRUSS WEB MEMBERS USING PRESS PLATES, STAPLES, OR TOE NAILS DESIGNED TO SUPPORT THE INSULATION AND HANGING LOADS. PRESS PLATES FOR INSULATION SUPPORT DO NOT NEED TO BE OVERSIZED PER CHURCH SPECIFICATION.
3. LOAD COMBINATIONS SHOWN ARE IN ADDITION TO THE IBC WIND AND SEISMIC LOAD COMBINATIONS. ALL TRUSSES SHALL BE DESIGNED PER LOAD COMBINATIONS SPECIFIED IN IBC SECTION 1605. WIND LOADS LISTED ARE ASD LOADS.
4. FRAMER TO INCLUDE AN ALLOWANCE FOR TRUSS BRACING THAT WILL BE DESIGNED BY THE TRUSS MANUFACTURER.
5. LIMIT TOTAL LOAD DEFLECTION TO L/240. LIMIT LIVE LOAD DEFLECTION TO L/360.
6. SPLICES IN TOP AND BOTTOM CHORDS TO OCCUR AT TRUSS JOINTS.
7. INSTALL ERECTION AND PERMANENT TRUSS BRIDGING AND BRACING AS REQUIRED BY THE TRUSS INSTITUTE AND AS SHOWN IN THE TRUSS SHOP DRAWINGS.
8. UNLESS A MORE STRINGENT FASTENING SCHEDULE IS PROVIDED BY THE TRUSS MANUFACTURER OR ELSEWHERE IN THESE DOCUMENTS, THE FOLLOWING IS TO BE USED FOR FASTENING MULTI-PLY TRUSSES TOGETHER:
   a. TRUSSES OF 4 OR MORE PLIES ARE TO BE CONNECTED TOGETHER USING 1/2" DIAMETER BOLTS AT 32"o.c. OR EQUAL. USE AT ALL MEMBERS.
   b. TRUSSES OF 3 OR LESS PLIES ARE TO BE CONNECTED TOGETHER USING 10d COMMON NAILS AT 9"o.c. STAGGERED TOP TO BOTTOM OF TRUSS MEMBERS OR EQUAL (9"o.c. SPACING AT TOP AND AT BOTTOM OF TRUSS MEMBERS). USE AT ALL MEMBERS.
9. TRUSS MANUFACTURER TO FASTEN MULTI-PLY TRUSSES PRIOR TO DELIVERY OF TRUSSES TO SITE
10. SEE THE ARCHITECTURAL DRAWINGS FOR GEOMETRY INFORMATION NOT SHOWN.
11. VERIFY ALL DIMENSIONS WITH ARCHITECTURAL DRAWINGS.

bhd ARCHITECTS
www.bhdarchitects.com
Phone 801.571.0010
Fax 801.571.0303
Toll Free 888.571.0010
65 East Wadsworth Park Drive
Suite 205 Draper, Utah 84020

PROFESSIONAL STRUCTURAL ENGINEER
Matthew C. McBride
No. 353893
5/29/25
STATE OF UTAH

ARW ENGINEERS
Think. Plan. Design.
Salem, Utah 84653
801.798.0555
arwengineers.com

THE CHURCH OF JESUS CHRIST OF LATTER-DAY SAINTS

Nibley 6 &
Nibley UT West Stake

Approx. 3410 South 1200 West, Nibley, Utah
41.670809, -111.860775

Date: 29 May 2025
BHD #: 2403
County Parcel: 03050C0016
Plan Series: Heritage 24
Owner #: 514-4728

Drawing Issue and Revision Schedule

#	Date	Description
1	29 May 2025	Bid Documents

Truss Elevations

S201

C:\Users\jackson\Documents\S-25705 - Nibley 6 - Her 24 - 2025_jacksonQEvM82.rvt
5/20/2025 3:09:39 PM

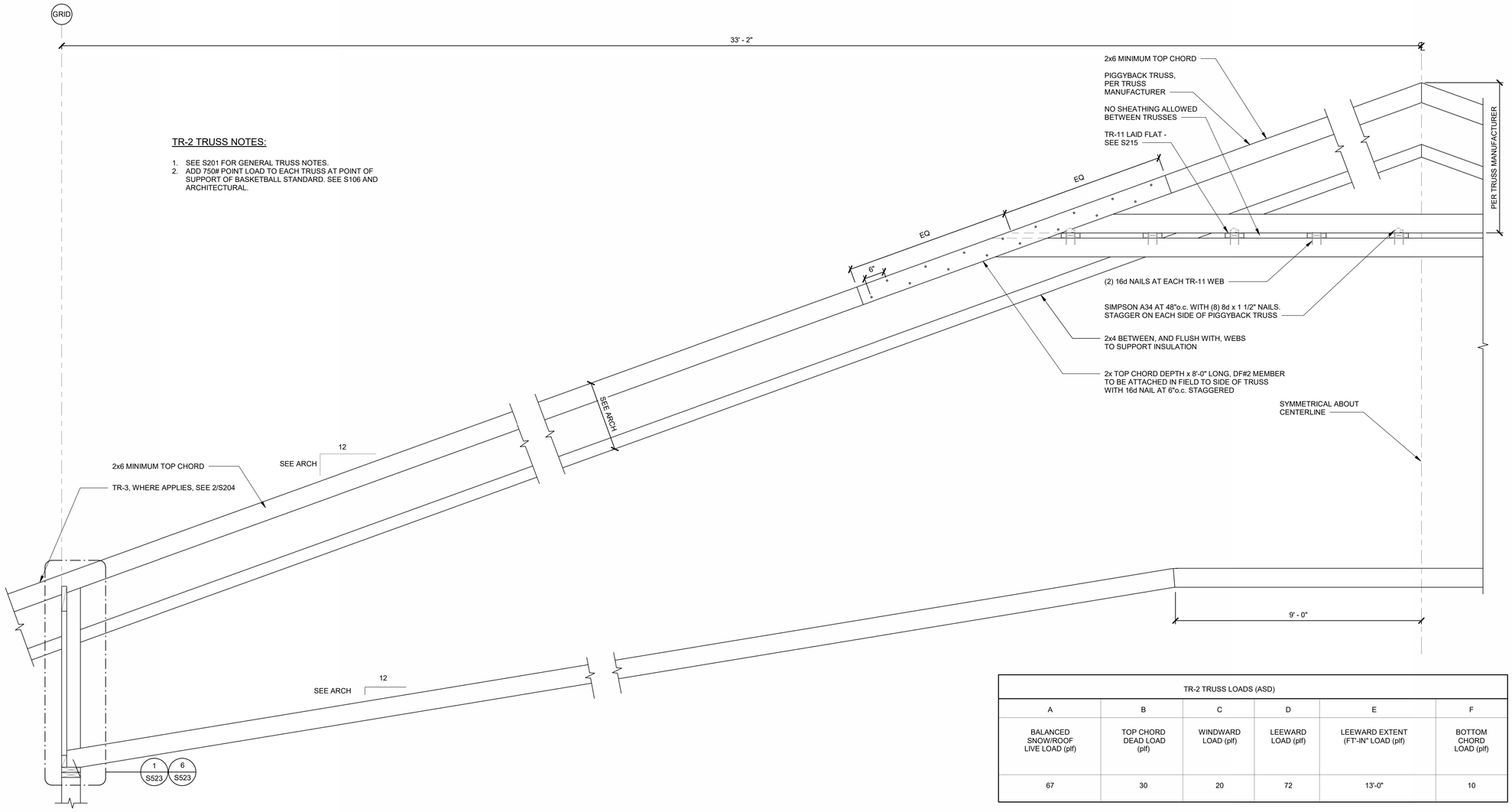

TR-2 TRUSS NOTES:

1. SEE S201 FOR GENERAL TRUSS NOTES.
2. ADD 750# POINT LOAD TO EACH TRUSS AT POINT OF SUPPORT OF BASKETBALL STANDARD. SEE S106 AND ARCHITECTURAL.

TR-2 TRUSS LOADS (ASD)					
A	B	C	D	E	F
BALANCED SNOW/ROOF LIVE LOAD (plf)	TOP CHORD DEAD LOAD (plf)	WINDWARD LOAD (plf)	LEEWARD LOAD (plf)	LEEWARD EXTENT (FT'-IN" LOAD (plf)	BOTTOM CHORD LOAD (plf)
67	30	20	72	13'-0"	10

TR-2 TRUSS ELEVATION

SCALE : NONE

1
S202

TR-2 LOAD DIAGRAMS

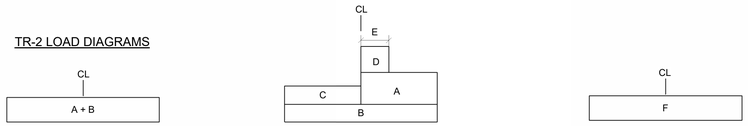

LOAD DIAGRAM 1 - TOP CHORD

LOAD DIAGRAM 2 - TOP CHORD

NOTE: TRUSS TO SUPPORT LOADS AS SHOWN AND AS MIRRORED.

LOAD DIAGRAM 3 - BOTTOM CHORD

TR-2 LOAD COMBINATIONS

COMBINATION LOAD 1: LOAD DIAGRAMS 1,3
COMBINATION LOAD 2: LOAD DIAGRAMS 2,3

bhd ARCHITECTS
www.bhdarchitects.com
Phone 801.571.0010
Fax 801.571.0303
Toll Free 888.571.0010
65 East Wadsworth Park Drive
Suite 205 Draper, Utah 84020

Matthew C. McBride No. 353893 5/29/25 STATE OF UTAH

ARW ENGINEERS

THE CHURCH OF JESUS CHRIST OF LATTER-DAY SAINTS

Nibley 6 & Nibley UT West Stake

Approx. 3410 South 1200 West, Nibley, Utah
41.670809, -111.866775

Owner #: 514-4728
Plan Series: Heritage 24
County Parcel: 03050:0016
BHD #: 2403
Date: 29 May 2025

Drawing Issue and Revision Schedule

#	Date	Description
1	29 May 2025	Bid Documents

Truss Elevations

S202

C:\Users\jacksonq\Documents\S-25705 - Nibley 6 - Her 24 - 2025_jacksonQEMB2.rvt
5/20/2025 3:09:40 PM

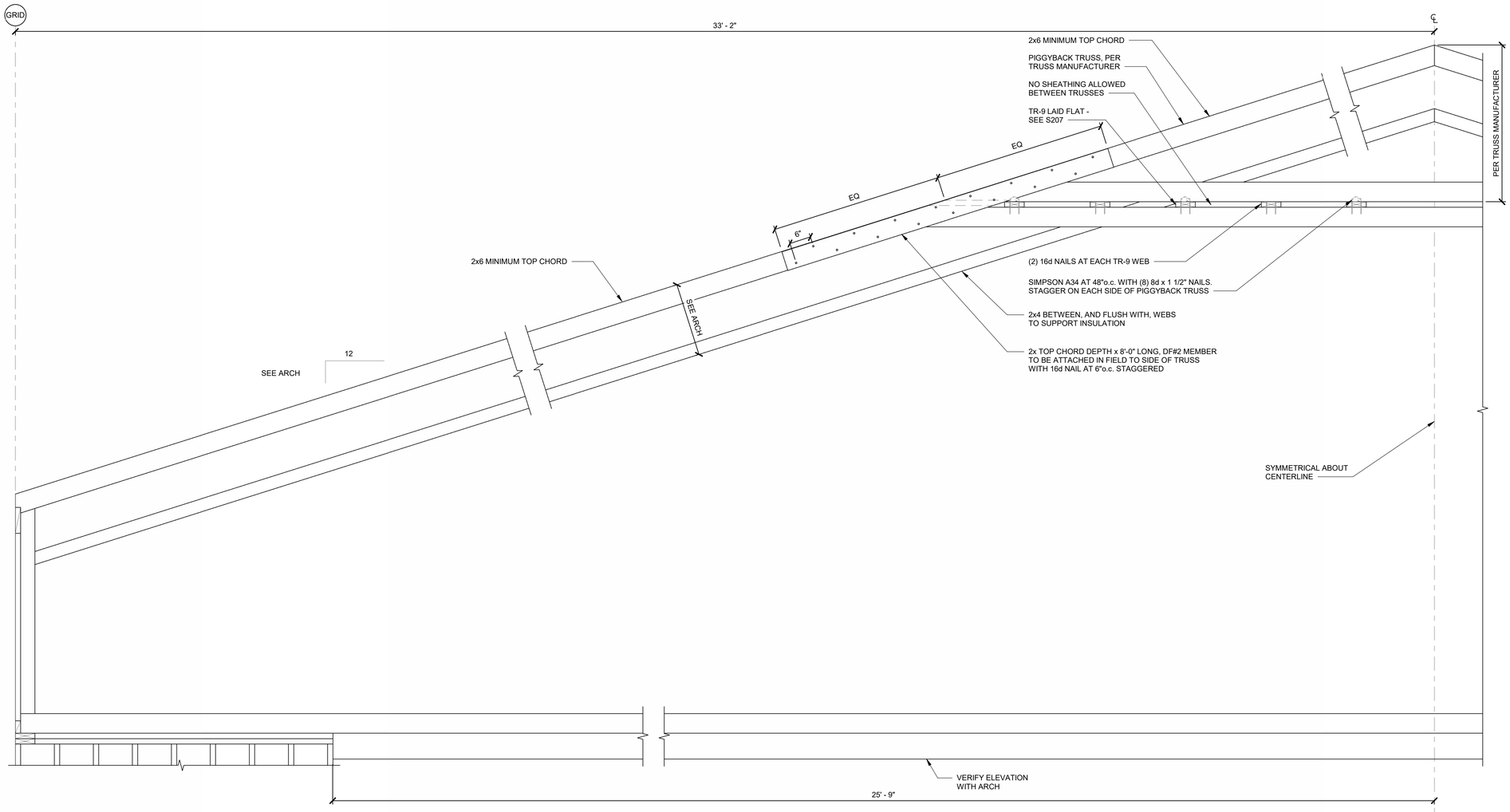

TR-2A TRUSS ELEVATION

SCALE : NONE

1
S203

TR-2A TRUSS NOTES:

1. SEE S201 FOR GENERAL TRUSS NOTES.
2. SEISMIC LOADS DO NOT CONTROL DESIGN.
3. LIMIT TOTAL LOAD DEFLECTION TO L/240, LIMIT LIVE LOAD DEFLECTION TO L/360, AND A MAXIMUM DEFLECTION OF 1/2" UNDER EITHER TOTAL LOAD OR LIVE LOAD.
4. SEE 3/S525 FOR CONNECTION OF TR-2A TO TR-2B

TR-2A LOAD COMBINATIONS

COMBINATION LOAD 1: LOAD DIAGRAMS 1,3
COMBINATION LOAD 2: LOAD DIAGRAMS 2,3
COMBINATION LOAD 3: LOAD DIAGRAMS 1,4,3
COMBINATION LOAD 4: LOAD DIAGRAMS 1,5,3
COMBINATION LOAD 5: LOAD DIAGRAMS 2,4,3
COMBINATION LOAD 6: LOAD DIAGRAMS 2,5,3

TR-2A LOAD DIAGRAMS

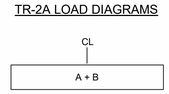

LOAD DIAGRAM 1 - TOP CHORD

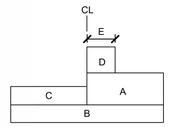

LOAD DIAGRAM 2 - TOP CHORD

NOTE: TRUSS TO SUPPORT LOADS AS SHOWN AND AS MIRRORED.

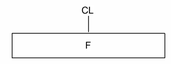

LOAD DIAGRAM 3 - BOTTOM CHORD

LOAD DIAGRAM 4 - BOTTOM CHORD

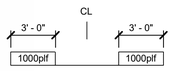

LOAD DIAGRAM 5 - BOTTOM CHORD

bhd ARCHITECTS
www.bhdarchitects.com
Phone 801.571.0010
Fax 801.571.0303
Toll Free 888.571.0010
65 East Wadsworth Park Drive
Suite 205 Draper, Utah 84020

STRUCTURAL ENGINEER — Matthew C. McBride — No. 353893 — 5/29/25 — STATE OF UTAH

ARW ENGINEERS

THE CHURCH OF JESUS CHRIST OF LATTER-DAY SAINTS

Nibley 6 &
Nibley UT West Stake

Approx. 3410 South 1200 West, Nibley, Utah
41.670870, -111.860775

BHD #: 2403
County Parcel: 03:035:0016
Plan Series: Heritage 24
Owner #: 514-4728
Date: 29 May 2025

Drawing Issue and Revision Schedule

#	Date	Description
1	29 May 2025	Bid Documents

Truss Elevations

S203

C:\Users\jacksonp\Documents\S-25705 - Nibley 6 - Her 24 - 2025_jacksonpQEvM82.rvt
5/20/2025 3:09:41 PM

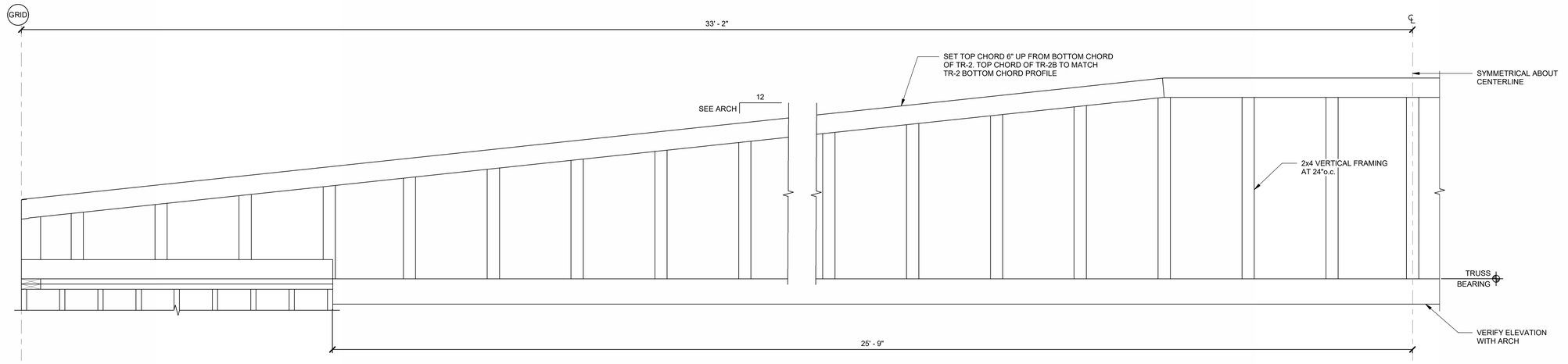

TR-2B TRUSS ELEVATION

SCALE : NONE

1
S204

TR-2B TRUSS NOTES:

1. SEE S201 FOR GENERAL TRUSS NOTES.
2. TR-2B HAS NO APPLIED GRAVITY LOADS AND DOES NOT SUPPORT INSULATION.
3. SEE 3/S525 FOR SCHEMATIC FRAMING OF TR-2A TO TR-2B.

bhd ARCHITECTS
www.bhdarchitects.com
Phone 801.571.0010
Fax 801.571.0303
Toll Free 888.571.0010
65 East Wadsworth Park Drive
Suite 205 Draper, Utah 84020

PROFESSIONAL STRUCTURAL ENGINEER
Matthew C. McBride
No. 353893
5/29/25
STATE OF UTAH

ARW ENGINEERS
Mechanical Engineers
Ogden, Utah 84404
www.arwengineers.com

THE CHURCH OF
JESUS CHRIST
OF LATTER-DAY SAINTS

Nibley 6 &
Nibley UT West Stake

Approx. 3410 South 1200 West, Nibley, Utah
41.670809, -111.860775

Date:	BHD #:	County Parcel:	Plan Series:	Owner #:
29 May 2025	2403	03:050:0016	Heritage 24	514-4728

Drawing Issue and Revision Schedule

#	Date	Description
1	29 May 2025	Bid Documents

Truss Elevations

S204

C:\Users\jacksonp\Documents\S-25705 - Nibley 6 - Her 24 - 2025_jacksonpQEMB2.rvt

5/20/2025 3:09:42 PM

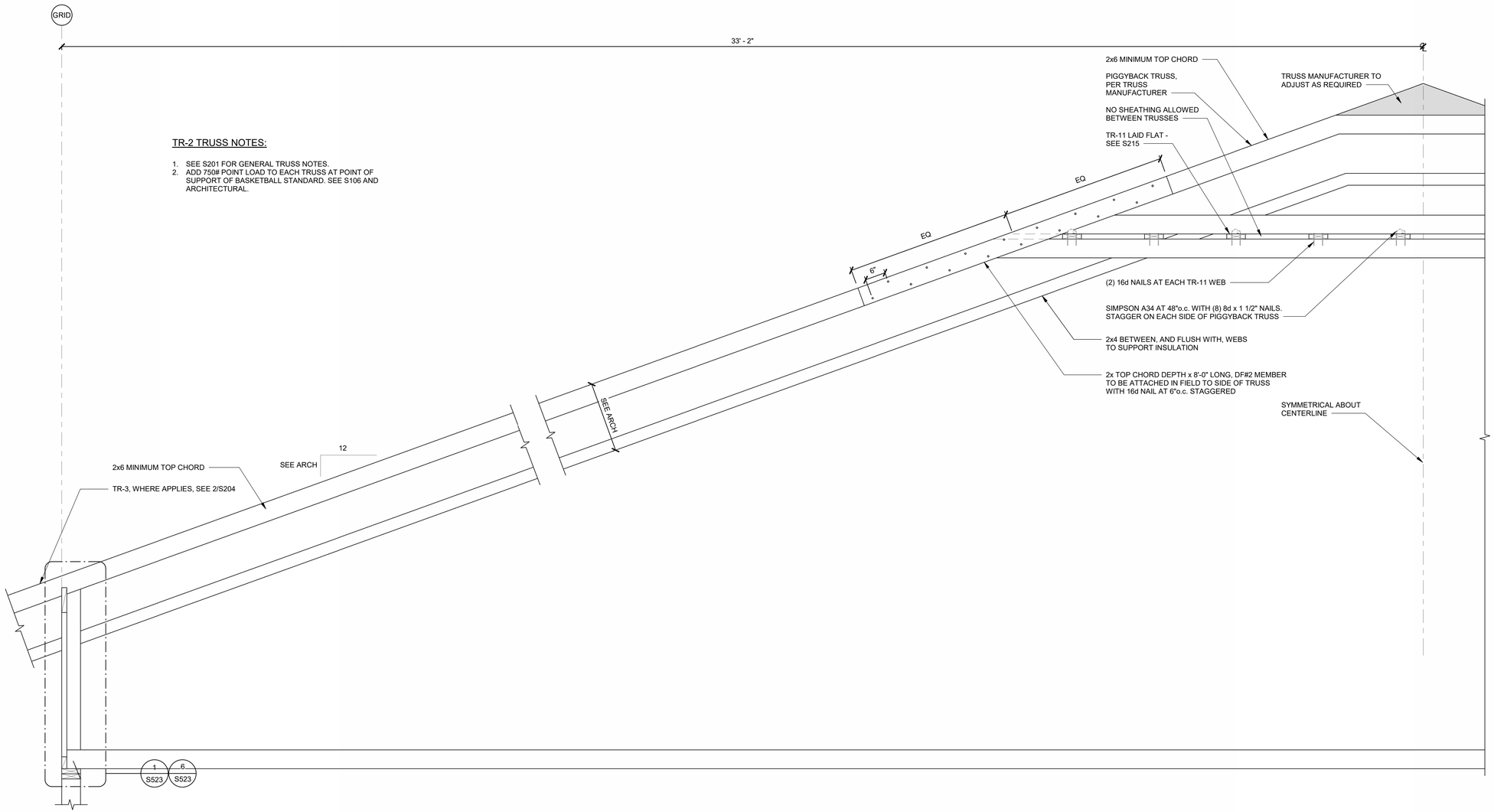

TR-2 TRUSS NOTES:

1. SEE S201 FOR GENERAL TRUSS NOTES.
2. ADD 750# POINT LOAD TO EACH TRUSS AT POINT OF SUPPORT OF BASKETBALL STANDARD. SEE S106 AND ARCHITECTURAL.

TR-2C TRUSS ELEVATION

SCALE : NONE

1 / S205

TR-2C TRUSS LOADS (ASD)					
A	B	C	D	E	F
BALANCED SNOW/ROOF LIVE LOAD (plf)	TOP CHORD DEAD LOAD (plf)	WINDWARD LOAD (plf)	LEEWARD LOAD (plf)	LEEWARD EXTENT (FT'-IN" LOAD (plf)	BOTTOM CHORD LOAD (plf)
67	30	20	72	13'-0"	10

TR-2C LOAD DIAGRAMS

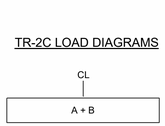

LOAD DIAGRAM 1 - TOP CHORD

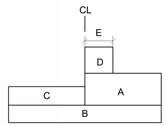

LOAD DIAGRAM 2 - TOP CHORD

NOTE: TRUSS TO SUPPORT LOADS AS SHOWN AND AS MIRRORED.

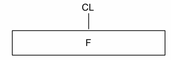

LOAD DIAGRAM 3 - BOTTOM CHORD

TR-2C LOAD COMBINATIONS

COMBINATION LOAD 1: LOAD DIAGRAMS 1,3
COMBINATION LOAD 2: LOAD DIAGRAMS 2,3

bhd ARCHITECTS
www.bhdarchitects.com
Phone 801.571.0010
Fax 801.571.0303
Toll Free 888.571.0010
65 East Wadsworth Park Drive
Suite 205 Draper, Utah 84020

Matthew C. McBride No. 353893 5/29/25 STATE OF UTAH

ARW ENGINEERS

THE CHURCH OF JESUS CHRIST OF LATTER-DAY SAINTS

Nibley 6 & Nibley UT West Stake

Approx. 3410 South 1200 West, Nibley, Utah
41.670809, -111.860775

BHD #: 2403
County Parcel: 03:050:0016
Plan Series: Heritage 24
Owner #: 514-4728
Date: 29 May 2025

Drawing Issue and Revision Schedule

#	Date	Description
1	29 May 2025	Bid Documents

Truss Elevations

S205

C:\Users\jacksonp\Documents\S-25705 - Nibley 6 - Her 24 - 2025_jacksonpQEvM82.rvt
5/20/2025 3:09:43 PM

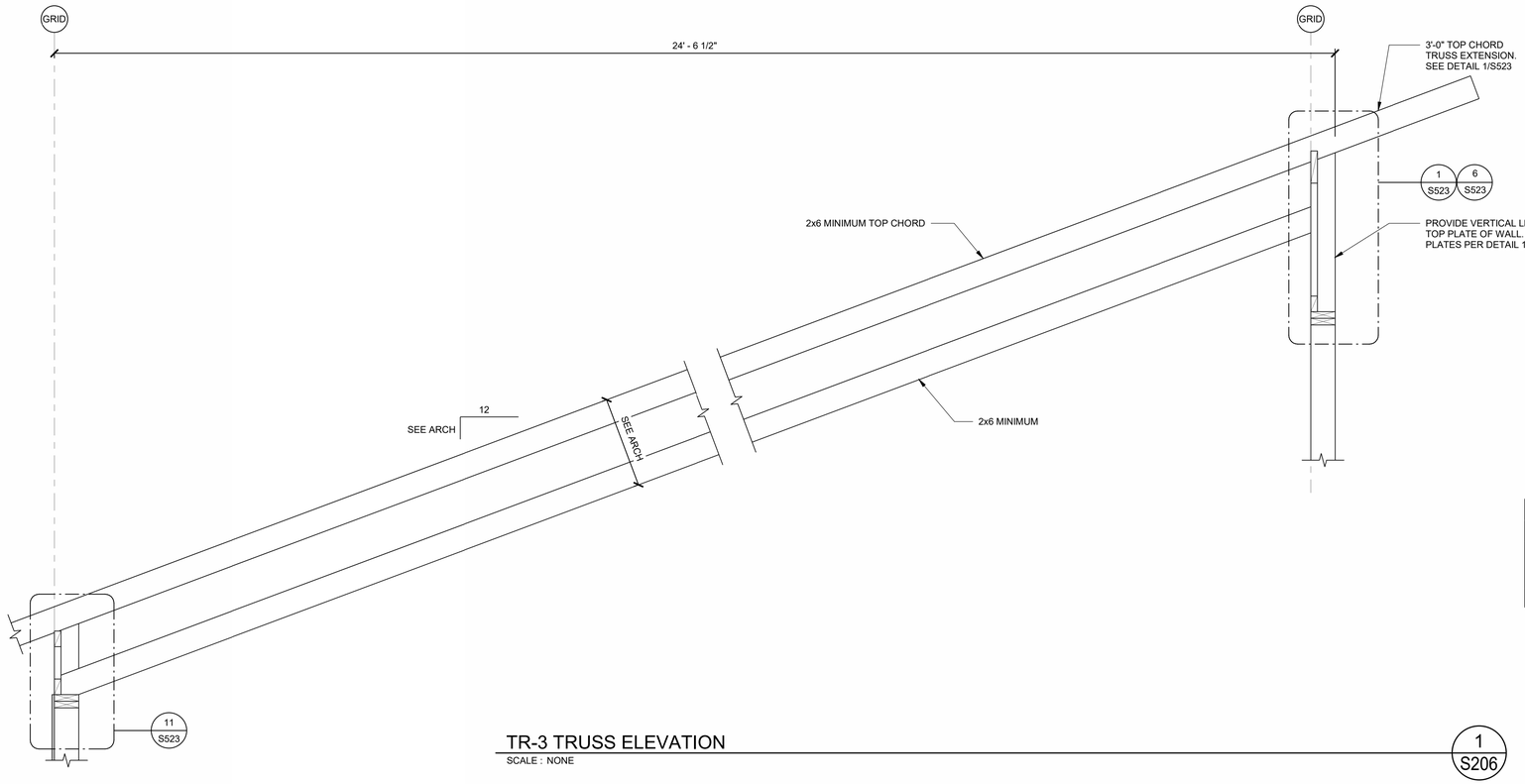

TR-3 TRUSS ELEVATION

SCALE : NONE

1
S206

TR-3 TRUSS NOTES:

1. SEE S201 FOR GENERAL TRUSS NOTES

TR-3 LOAD DIAGRAMS

A + B

LOAD DIAGRAM #1 - TOP CHORD

F

LOAD DIAGRAM #2 - BOTTOM CHORD

TR-3 LOAD COMBINATIONS

COMBINATION LOAD 1: DIAGRAMS 1 AND 2

TR-3 TRUSS LOADING (ASD)					
A	B	C	D	E	F
BALANCED SNOW/ROOF LIVE LOAD (plf)	TOP CHORD DEAD LOAD (plf)	WINDWARD LOAD (plf)	LEEWARD LOAD (plf)	LEEWARD EXTENT (FT'-IN" LOAD (plf)	BOTTOM CHORD LOAD (plf)
67	30	--	--	--	10

bhd ARCHITECTS
www.bhdarchitects.com
Phone 801.571.0010
Fax 801.571.0303
Toll Free 888.571.0010
65 East Wadsworth Park Drive
Suite 205 Draper, Utah 84020

PROFESSIONAL STRUCTURAL ENGINEER
Matthew C. McBride
No. 353893
5/29/25
STATE OF UTAH

ARW ENGINEERS
1336 W. Pen Circle
Ogden, Utah 84404
+1 801 782 4500
www.arwengineers.com

THE CHURCH OF
JESUS CHRIST
OF LATTER-DAY SAINTS

Nibley 6 &
Nibley UT West Stake

Approx. 3410 South 1200 West, Nibley, Utah
41.670809, -111.860775

Date: 29 May 2025
BHD #: 2403
County Parcel: 03050:0016
Plan Series: Heritage 24
Owner #: 514-4728

Drawing Issue and Revision Schedule

#	Date	Description
1	29 May 2025	Bid Documents

Truss Elevations

S206

C:\Users\jacksonp\Documents\S-25705 - Nibley 6 - Her 24 - 2025_jacksonpQEMB2.rvt

5/20/2025 3:09:44 PM

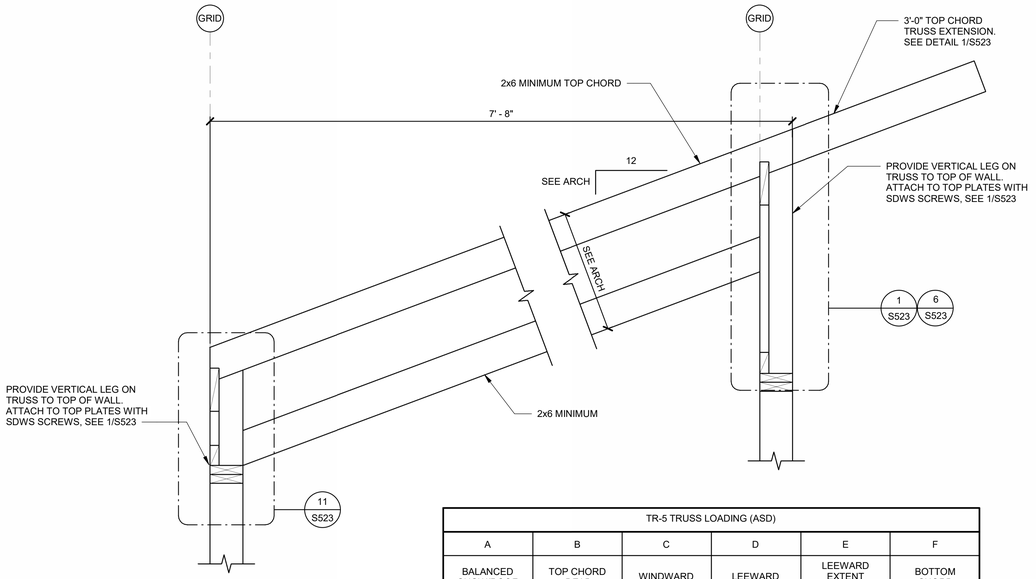

TR-5 TRUSS LOADING (ASD)					
A	B	C	D	E	F
BALANCED SNOW/ROOF LIVE LOAD (plf)	TOP CHORD DEAD LOAD (plf)	WINDWARD LOAD (plf)	LEEWARD LOAD (plf)	LEEWARD EXTENT (FT'-IN" LOAD (plf)	BOTTOM CHORD LOAD (plf)
67	30	--	--	--	10

TR-5 TRUSS ELEVATION

SCALE : 1" = 1'-0"

1 S208

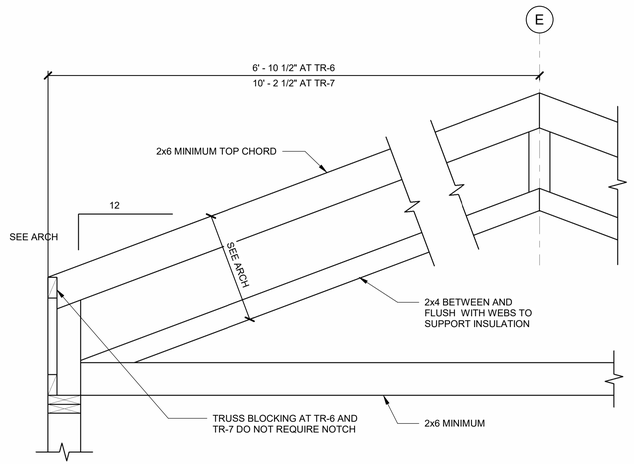

TR-6 AND TR-7 LOAD DIAGRAM

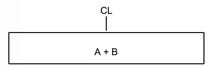

LOAD DIAGRAM #1 - TOP CHORD

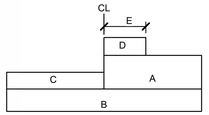

LOAD DIAGRAM #2 - TOP CHORD

NOTE: TRUSS TO SUPPORT LOADS AS SHOWN AND AS MIRRORED.

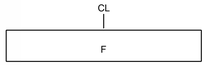

LOAD DIAGRAM #3 - BOTTOM CHORD

TR-6 AND TR-7 LOAD COMBINATIONS

COMBINATION LOAD 1: DIAGRAMS 1,3
COMBINATION LOAD 2: DIAGRAMS 2,3

TR-6 AND TR-7 TRUSS NOTES

1. SEE S201 FOR GENERAL TRUSS NOTES

TR-6 AND TR-7 TRUSS LOADING (ASD)					
A	B	C	D	E	F
BALANCED SNOW/ROOF LIVE LOAD (plf)	TOP CHORD DEAD LOAD (plf)	WINDWARD LOAD (plf)	LEEWARD LOAD (plf)	LEEWARD EXTENT (FT'-IN" LOAD (plf)	BOTTOM CHORD LOAD (plf)
67	30	20	40	7'-3"	10

TR-6 AND TR-7 TRUSS ELEVATION

SCALE : 1" = 1'-0"

2 S208

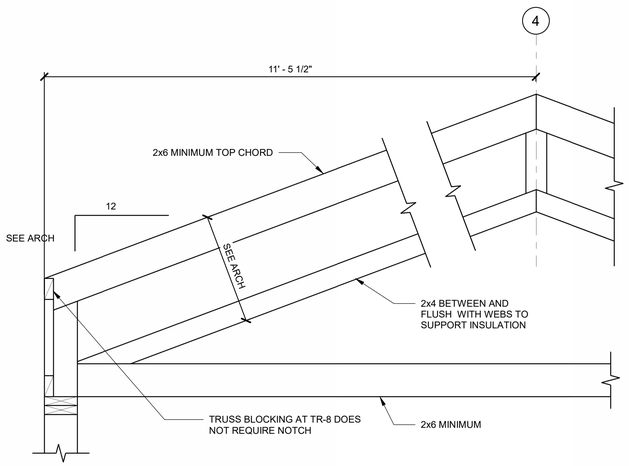

TR-8 LOAD DIAGRAM

LOAD DIAGRAM #1 - TOP CHORD

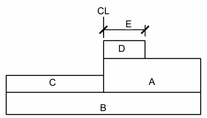

LOAD DIAGRAM #2 - TOP CHORD

NOTE: TRUSS TO SUPPORT LOADS AS SHOWN AND AS MIRRORED.

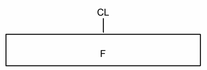

LOAD DIAGRAM #3 - BOTTOM CHORD

TR-8 LOAD COMBINATIONS

COMBINATION LOAD 1: DIAGRAMS 1,3
COMBINATION LOAD 2: DIAGRAMS 2,3

TR-8 TRUSS NOTES

1. SEE S201 FOR GENERAL TRUSS NOTES

TR-8 TRUSS LOADING (ASD)					
A	B	C	D	E	F
BALANCED SNOW/ROOF LIVE LOAD (plf)	TOP CHORD DEAD LOAD (plf)	WINDWARD LOAD (plf)	LEEWARD LOAD (plf)	LEEWARD EXTENT (FT'-IN" LOAD (plf)	BOTTOM CHORD LOAD (plf)
67	30	20	40	7'-3"	10

TR-8 TRUSS ELEVATION

SCALE : 1" = 1'-0"

3 S208

bhd ARCHITECTS
www.bhdarchitects.com
Phone 801.571.0010
Fax 801.571.0303
Toll Free 888.571.0010
65 East Wadsworth Park Drive
Suite 205 Draper, Utah 84020

Matthew C. McBride No. 353893 5/29/25

ARW ENGINEERS
Draper, Utah 84020
www.arwengineers.com

THE CHURCH OF JESUS CHRIST OF LATTER-DAY SAINTS

Nibley 6 & Nibley UT West Stake

Approx. 3410 South 1200 West, Nibley, Utah
41.670809, -111.846075

Date: 29 May 2025
BHD #: 2403
Plan Series: Heritage 24
County Parcel: 03050:0016
Owner #: 514-4728

Drawing Issue and Revision Schedule

#	Date	Description
1	29 May 2025	Bid Documents

Truss Elevations

S208

C:\Users\jacksonp\Documents\S-25705 - Nibley 6 - Her 24 - 2025_jacksonpQEM82.rvt
5/20/2025 3:09:45 PM

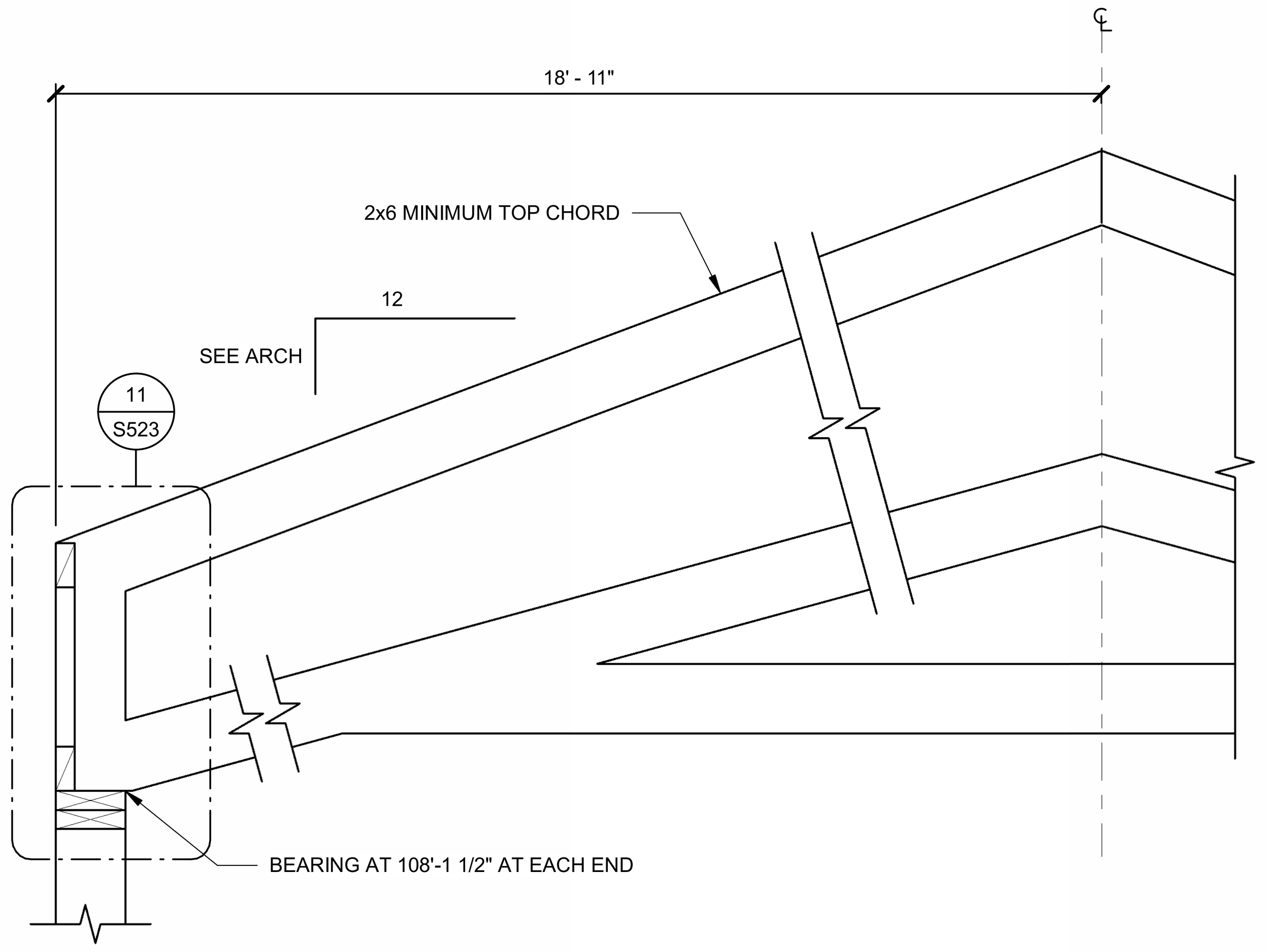

TR-10A LOAD DIAGRAM

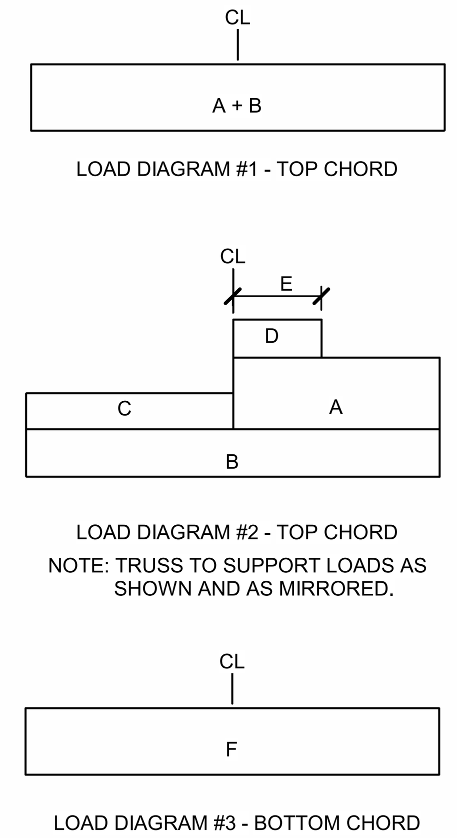

TR-10A TRUSS LOADING (ASD)

A	B	C	D	E	F
BALANCED SNOW/ROOF LIVE LOAD (plf)	TOP CHORD DEAD LOAD (plf)	WINDWARD LOAD (plf)	LEEWARD LOAD (plf)	LEEWARD EXTENT (FT'-IN" LOAD (plf)	BOTTOM CHORD LOAD (plf)
67	30	20	41	7'-4"	10

TR-10A LOAD COMBINATIONS

COMBINATION LOAD 1: DIAGRAMS 1,3
COMBINATION LOAD 2: DIAGRAMS 2,3

TR-10A TRUSS NOTES

1. SEE S201 FOR GENERAL TRUSS NOTES

TR-10A TRUSS ELEVATION

SCALE : NONE

1 S209

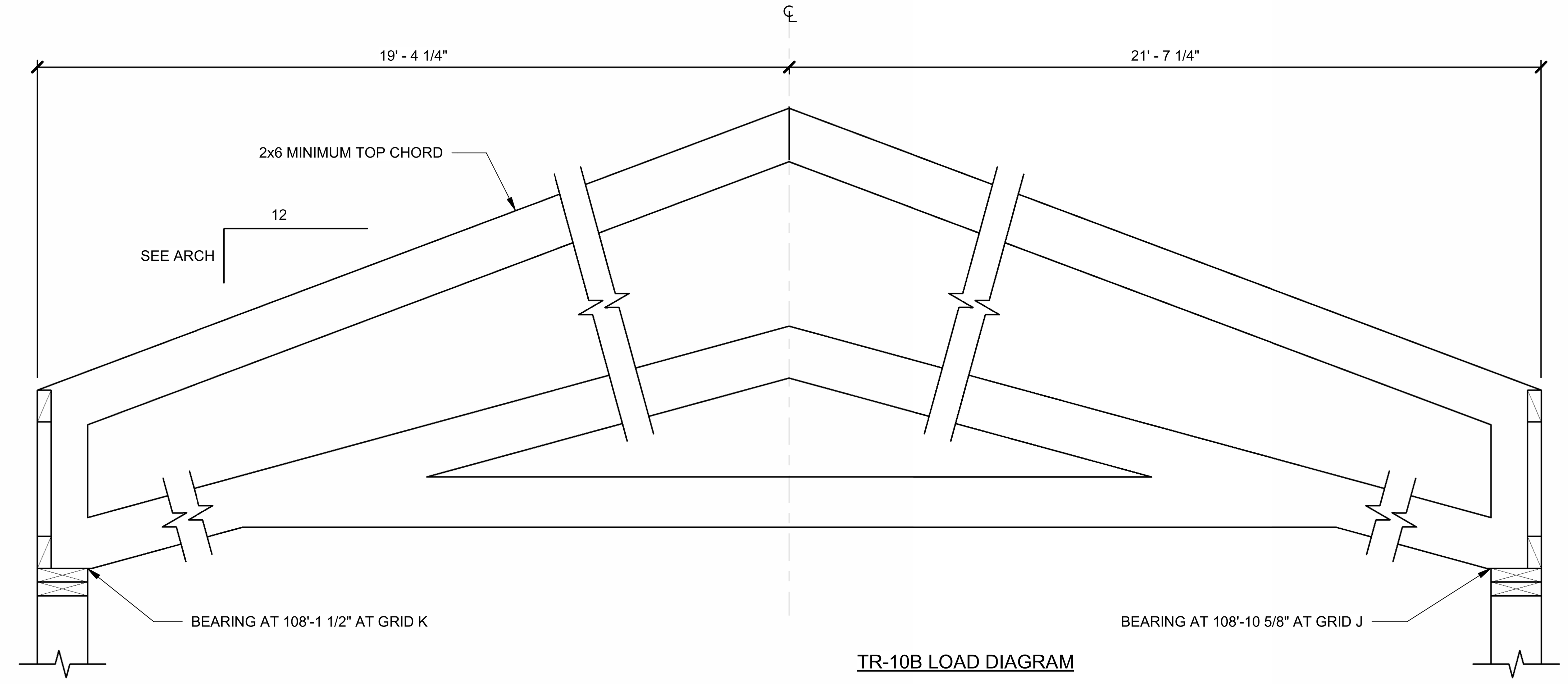

TR-10B LOAD DIAGRAM

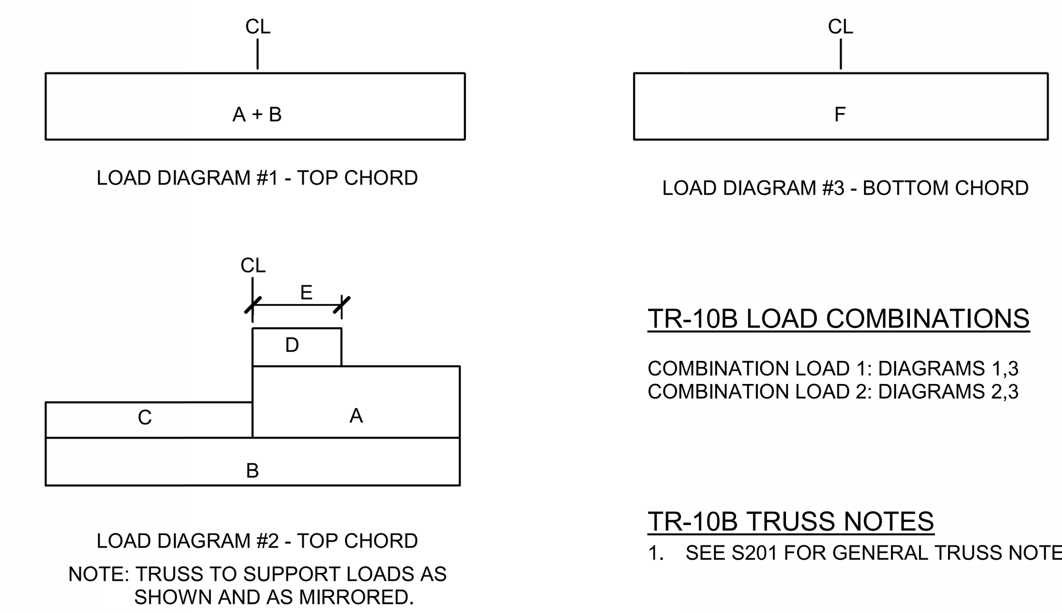

TR-10B TRUSS LOADING (ASD)

A	B	C	D	E	F
BALANCED SNOW/ROOF LIVE LOAD (plf)	TOP CHORD DEAD LOAD (plf)	WINDWARD LOAD (plf)	LEEWARD LOAD (plf)	LEEWARD EXTENT (FT'-IN" LOAD (plf)	BOTTOM CHORD LOAD (plf)
67	30	20	41	7'-4"	10

TR-10B LOAD COMBINATIONS

COMBINATION LOAD 1: DIAGRAMS 1,3
COMBINATION LOAD 2: DIAGRAMS 2,3

TR-10B TRUSS NOTES

1. SEE S201 FOR GENERAL TRUSS NOTES

TR-10B TRUSS ELEVATION

SCALE : NONE

2 S209

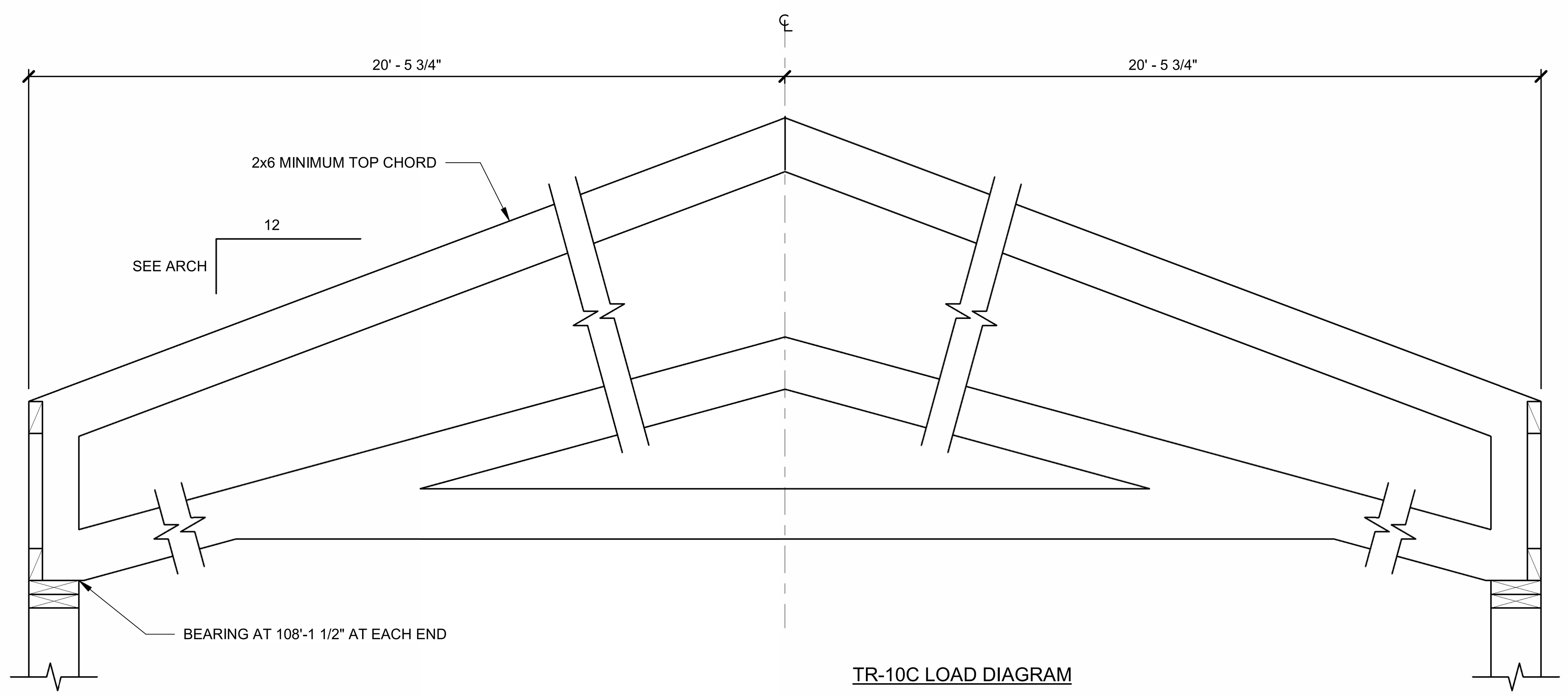

TR-10C LOAD DIAGRAM

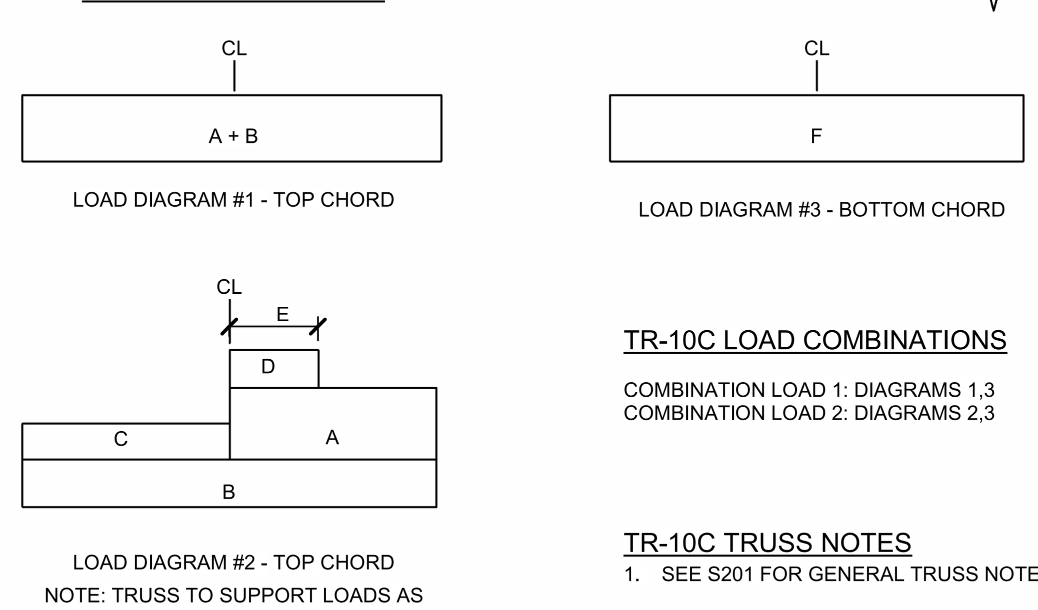

TR-10C TRUSS LOADING (ASD)

A	B	C	D	E	F
BALANCED SNOW/ROOF LIVE LOAD (plf)	TOP CHORD DEAD LOAD (plf)	WINDWARD LOAD (plf)	LEEWARD LOAD (plf)	LEEWARD EXTENT (FT'-IN" LOAD (plf)	BOTTOM CHORD LOAD (plf)
67	30	20	41	7'-4"	10

TR-10C LOAD COMBINATIONS

COMBINATION LOAD 1: DIAGRAMS 1,3
COMBINATION LOAD 2: DIAGRAMS 2,3

TR-10C TRUSS NOTES

1. SEE S201 FOR GENERAL TRUSS NOTES

TR-10C TRUSS ELEVATION

SCALE : NONE

3 S209

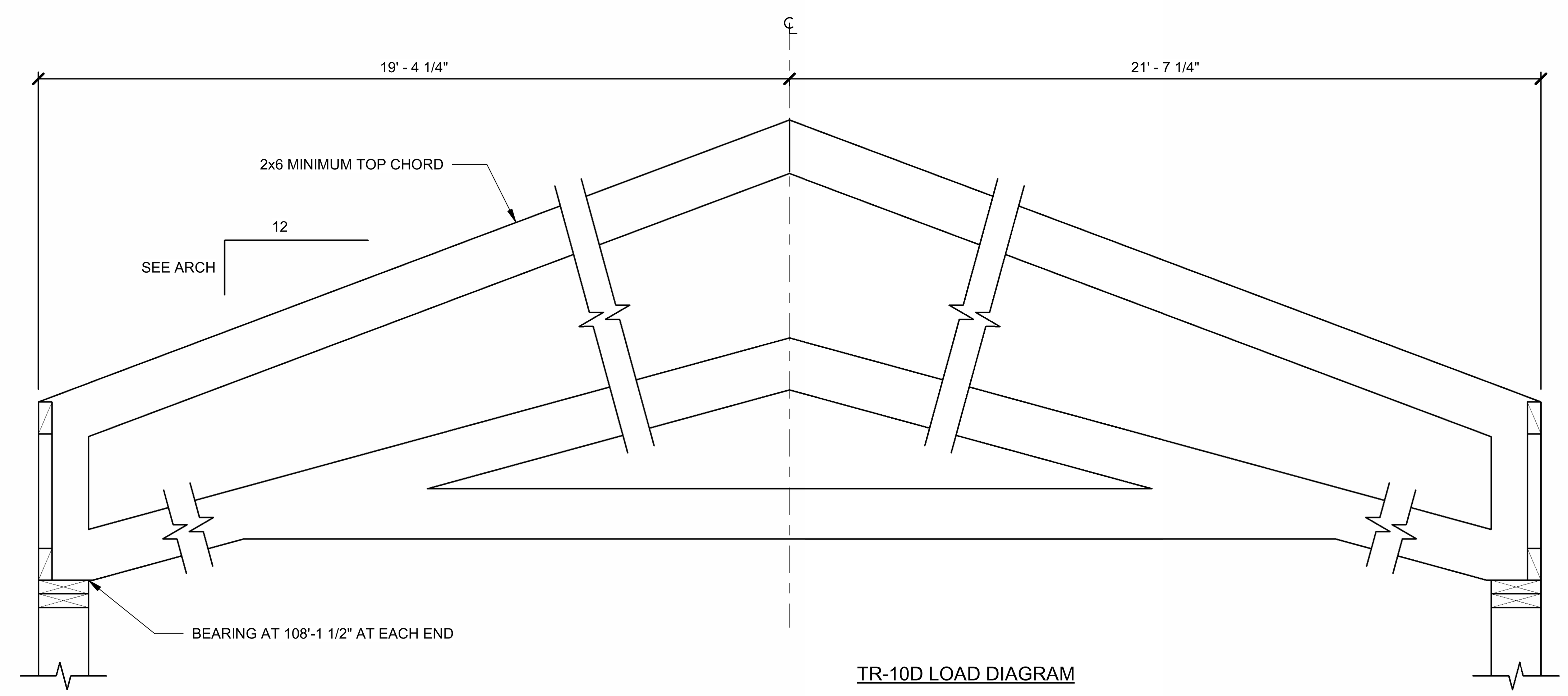

TR-10D LOAD DIAGRAM

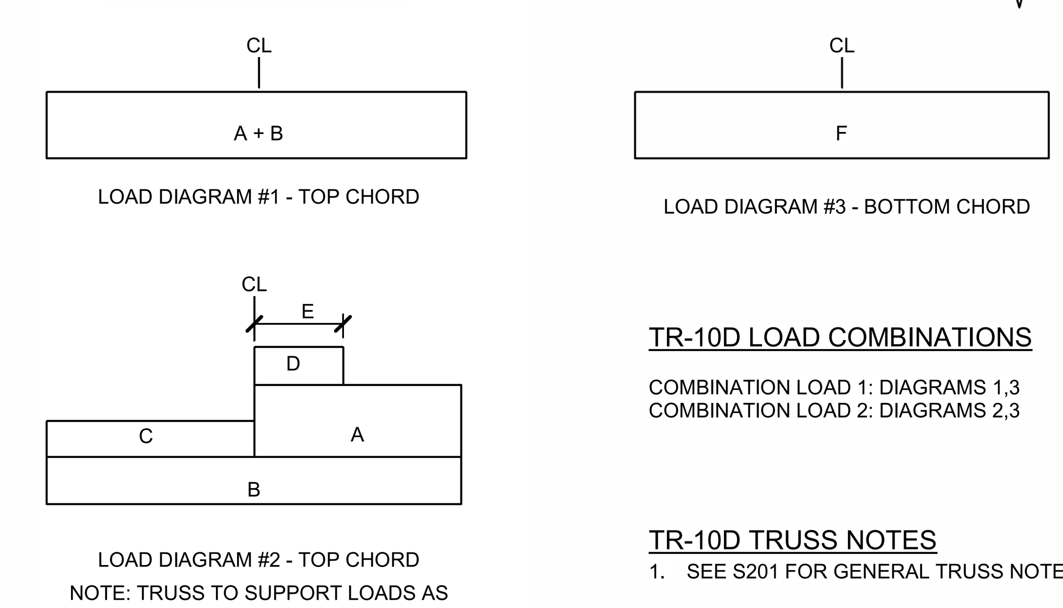

TR-10D TRUSS LOADING (ASD)

A	B	C	D	E	F
BALANCED SNOW/ROOF LIVE LOAD (plf)	TOP CHORD DEAD LOAD (plf)	WINDWARD LOAD (plf)	LEEWARD LOAD (plf)	LEEWARD EXTENT (FT'-IN" LOAD (plf)	BOTTOM CHORD LOAD (plf)
67	30	20	41	7'-4"	10

TR-10D LOAD COMBINATIONS

COMBINATION LOAD 1: DIAGRAMS 1,3
COMBINATION LOAD 2: DIAGRAMS 2,3

TR-10D TRUSS NOTES

1. SEE S201 FOR GENERAL TRUSS NOTES

TR-10D TRUSS ELEVATION

SCALE : NONE

4 S209

bhd ARCHITECTS
www.bhdarchitects.com
Phone 801.571.0010
Fax 801.571.0303
Toll Free 888.571.0010
65 East Wadsworth Park Drive
Suite 205 Draper, Utah 84020

ARW ENGINEERS

THE CHURCH OF JESUS CHRIST OF LATTER-DAY SAINTS

Nibley 6 & Nibley UT West Stake

Approx. 3410 South 1200 West, Nibley, Utah
41.670809, -111.860775

Owner #: 514-4728
Plan Series: Heritage 24
County Parcel: 03-050-0016
BHD #: 2403
Date: 29 May 2025

Drawing Issue and Revision Schedule

#	Date	Description
1	29 May 2025	Bid Documents

Truss Elevations

S209

C:\Users\jacksonp\Documents\S-25705 - Nibley 6 - Her 24 - 2025_jacksonpQEMB2.rvt

5/20/2025 3:09:46 PM

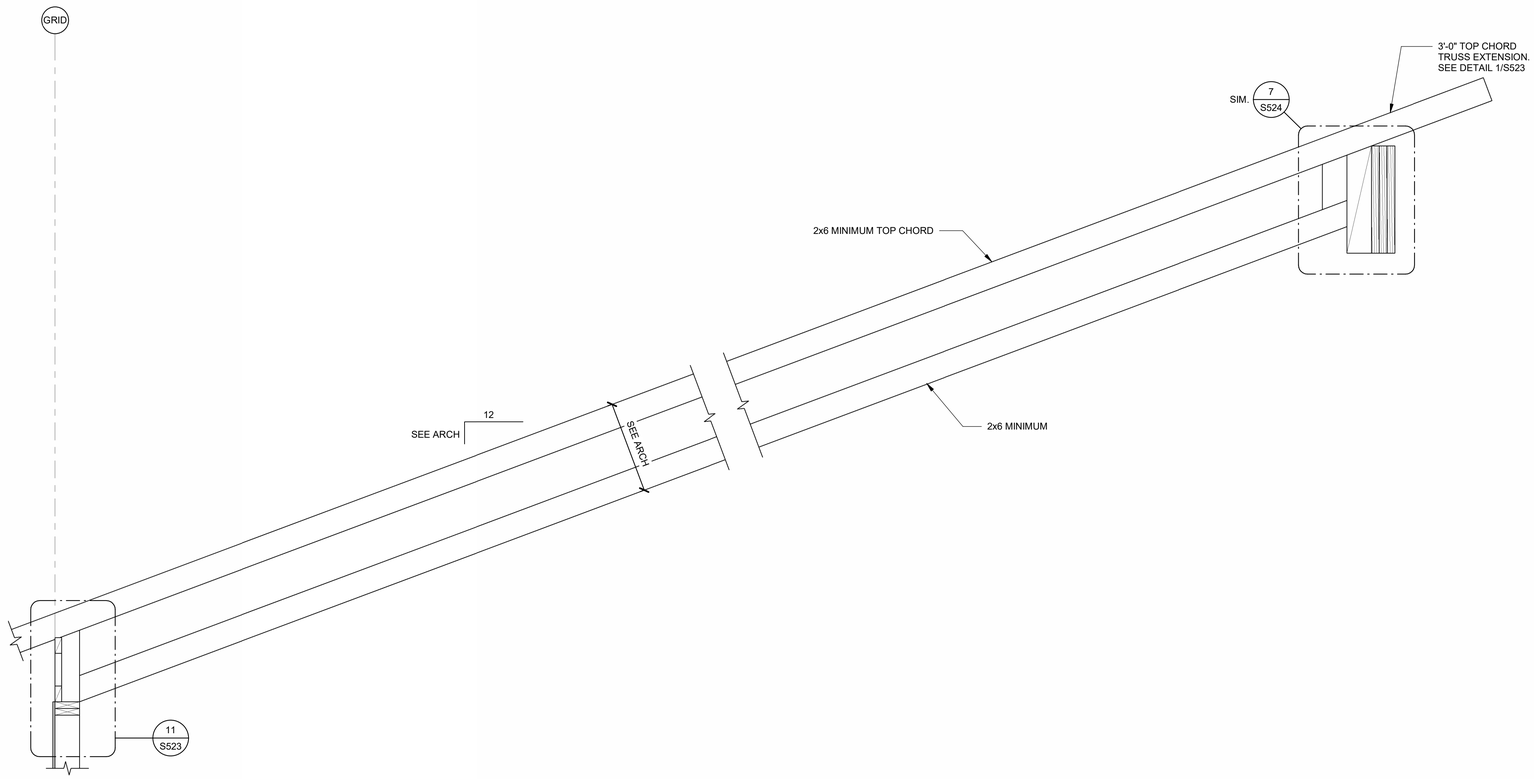

TR-12 TRUSS ELEVATION

SCALE : NONE

1 / S210

TR12 TRUSS NOTES:

1. SEE S201 FOR GENERAL TRUSS NOTES

TR-12 LOAD DIAGRAMS

A + B

LOAD DIAGRAM #1 - TOP CHORD

F

LOAD DIAGRAM #2 - BOTTOM CHORD

TR-12 LOAD COMBINATIONS

COMBINATION LOAD 1: DIAGRAMS 1 AND 2

TR-12 TRUSS LOADING (ASD)					
A	B	C	D	E	F
BALANCED SNOW/ROOF LIVE LOAD (plf)	TOP CHORD DEAD LOAD (plf)	WINDWARD LOAD (plf)	LEEWARD LOAD (plf)	LEEWARD EXTENT (FT-IN* LOAD (plf)	BOTTOM CHORD LOAD (plf)
67	30	--	--	--	10

bhd ARCHITECTS
www.bhdarchitects.com
Phone 801.571.0010
Fax 801.571.0303
Toll Free 888.571.0010
65 East Wadsworth Park Drive
Suite 205 Draper, Utah 84020

Matthew C. McBride No. 353893 5/29/25 STATE OF UTAH

ARW ENGINEERS
Draper, Utah 84020
www.arwengineers.com

THE CHURCH OF JESUS CHRIST OF LATTER-DAY SAINTS

Nibley 6 &
Nibley UT West Stake

Approx. 3410 South 1200 West, Nibley, Utah
41.670809, -111.840775

Date: 29 May 2025
BHD #: 2403
County Parcel: 03:050:0016
Plan Series: Heritage 24
Owner #: 514-4728

Drawing Issue and Revision Schedule

#	Date	Description
1	29 May 2025	Bid Documents

Truss Elevations

S210

C:\Users\jackson\Documents\S-25705 - Nibley 6 - Her 24 - 2025_jacksonQEM82.rvt
5/20/2025 3:09:47 PM

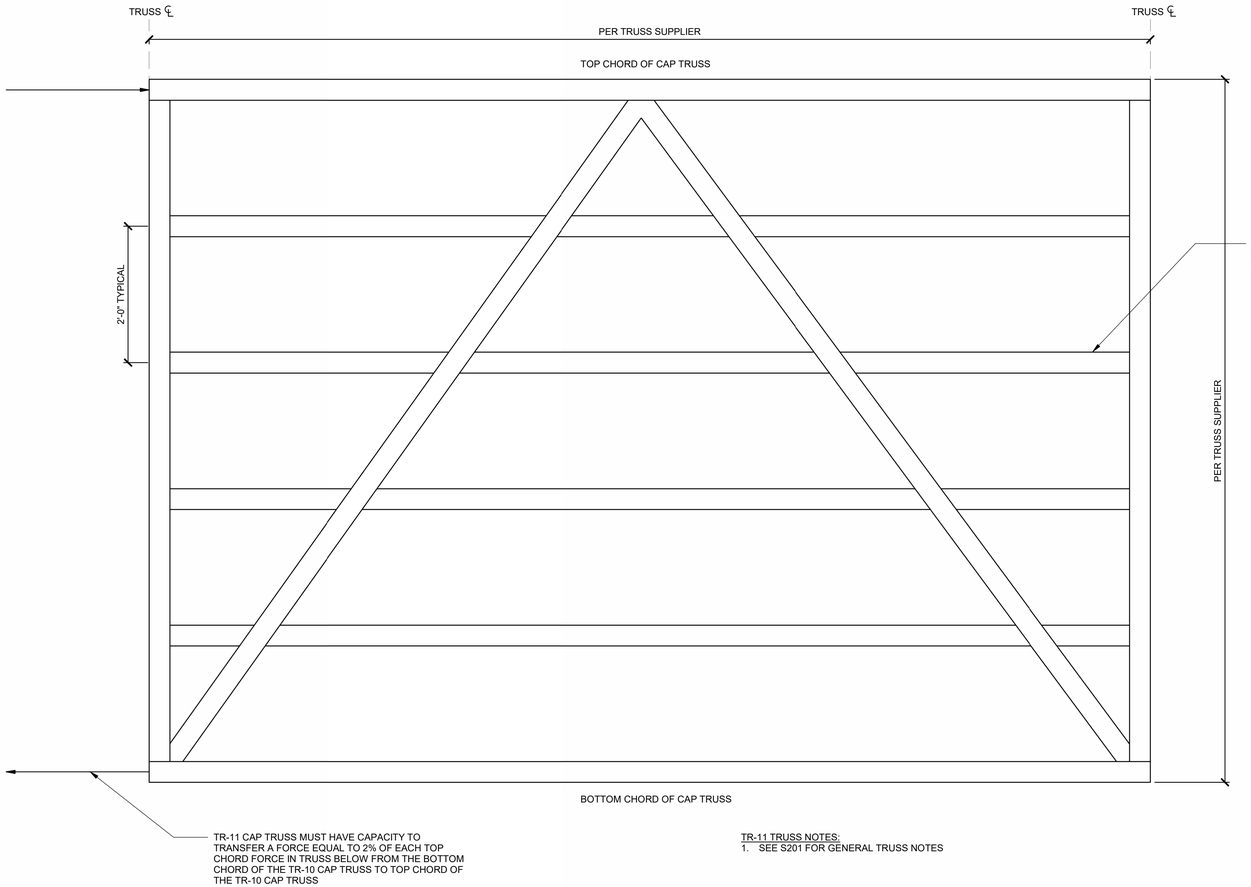

TR-11 TRUSS NOTES:
1. SEE S201 FOR GENERAL TRUSS NOTES

TR-11 CAP TRUSS ELEVATION

SCALE : 1" = 1'-0"

1
S215

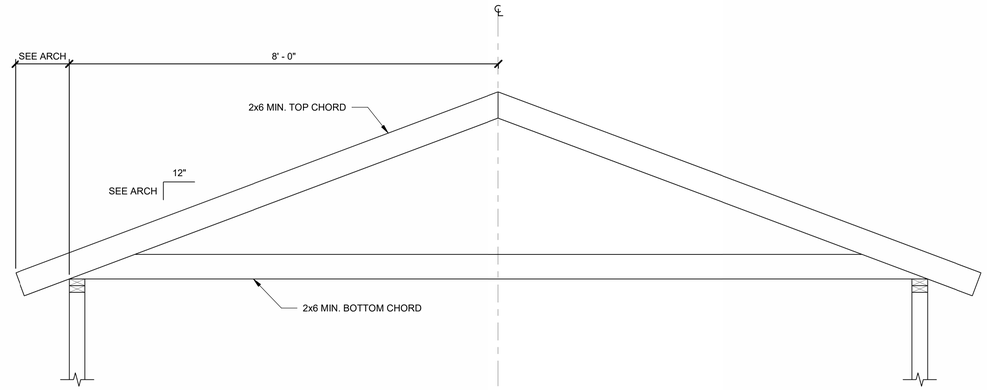

TR-8 TRUSS LOADS (ASD)					
A	B	C	D	E	F
BALANCED SNOW/ROOF LIVE LOAD (plf)	TOP CHORD DEAD LOAD (plf)	WINDWARD LOAD (plf)	LEEWARD LOAD (plf)	LEEWARD EXTENT (FT'-IN" LOAD (plf)	BOTTOM CHORD LOAD (plf)
72	60	22	42	7'-6"	10

TR- TRUSS NOTES:

1. SEE S201 FOR GENERAL TRUSS NOTES.

TR- LOAD DIAGRAMS

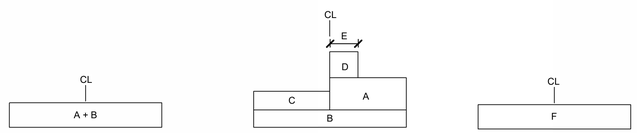

LOAD DIAGRAM 1 - TOP CHORD

LOAD DIAGRAM 2 - TOP CHORD

LOAD DIAGRAM 3 - BOTTOM CHORD

NOTE: TRUSS TO SUPPORT LOADS AS SHOWN AND AS MIRRORED.

TR- STORAGE TRUSS ELEVATION

SCALE : NONE

2
S215

bhd ARCHITECTS
www.bhdarchitects.com
Phone 801.571.0010
Fax 801.571.0303
Toll Free 888.571.0010
65 East Wadsworth Park Drive
Suite 205 Draper, Utah 84020

Matthew C. McBride No. 353893 5/29/25 STATE OF UTAH

ARW ENGINEERS
Draper, Utah 84020
www.arwengineers.com

THE CHURCH OF JESUS CHRIST OF LATTER-DAY SAINTS

Nibley 6 &
Nibley UT West Stake

Approx. 3410 South 1200 West, Nibley, Utah
41.670809, -111.840775

Owner #: 514-4728
Plan Series: Heritage 24
County Parcel: 03:050:0016
BHD #: 2403
Date: 29 May 2025

Drawing Issue and Revision Schedule

#	Date	Description
1	29 May 2025	Bid Documents

Truss Elevations

S215

C:\Users\jackson\Documents\S-25705 - Nibley 6 - Her 24 - 2025 jacksonOEM82.rvt
5/20/2025 3:09:48 PM

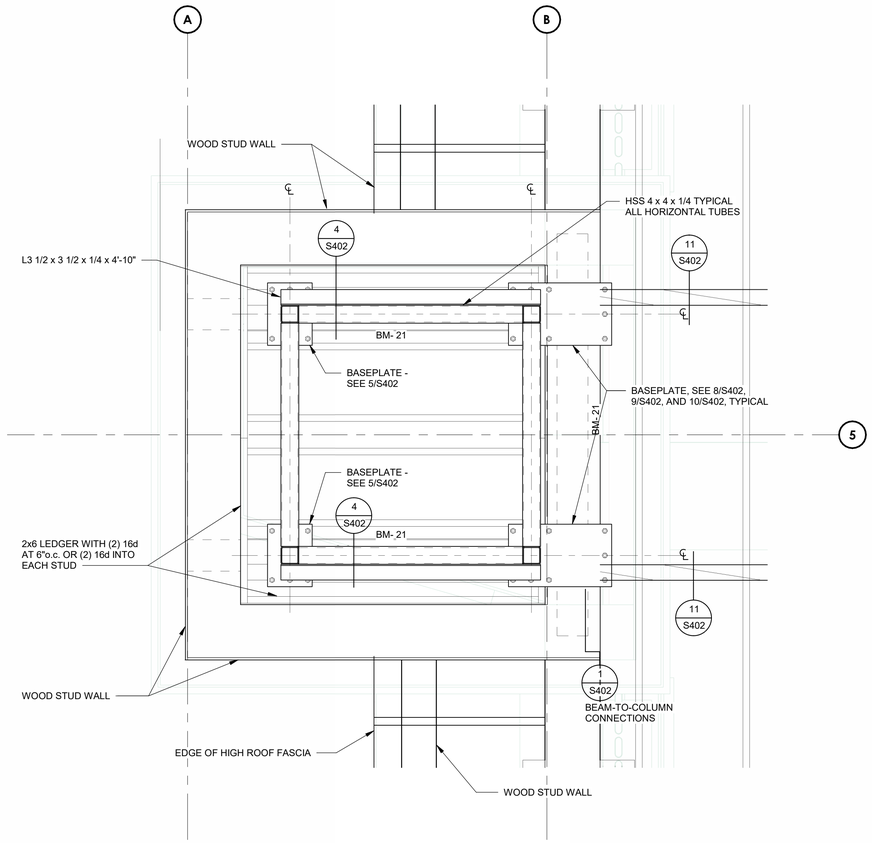

ENLARGED ROOF FRAMING PLAN

SCALE : 3/4" = 1'-0"

A S401

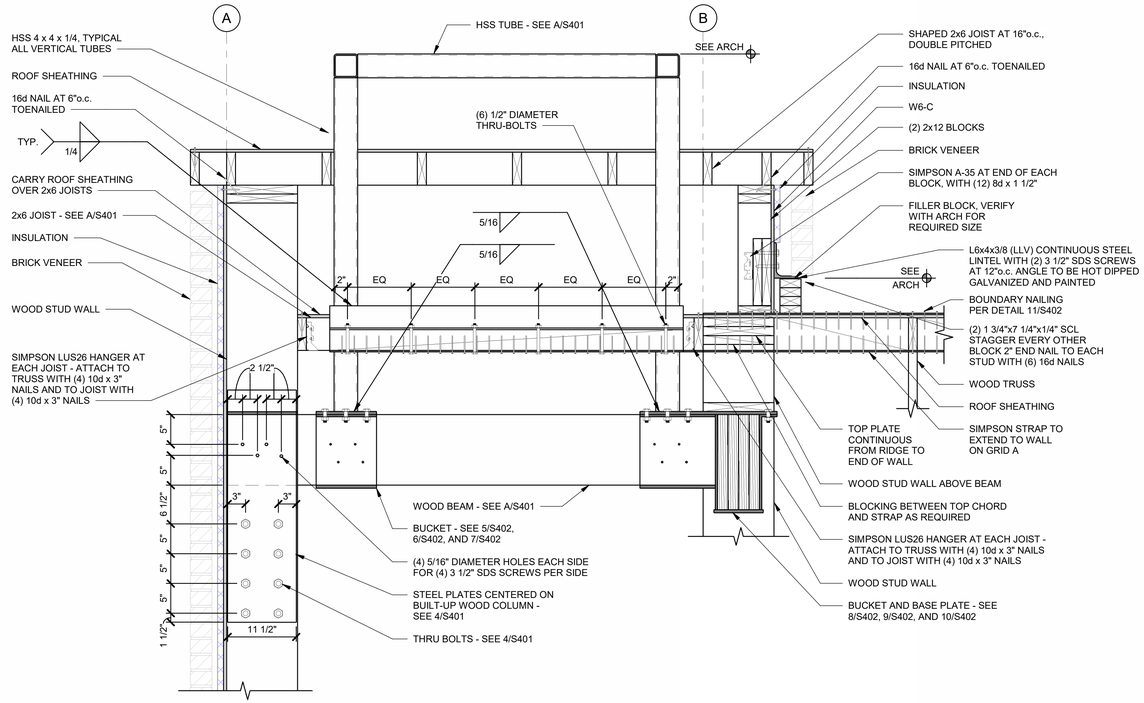

CONNECTION BEAM TO WALL

SCALE : 1" = 1'-0"

1 S401

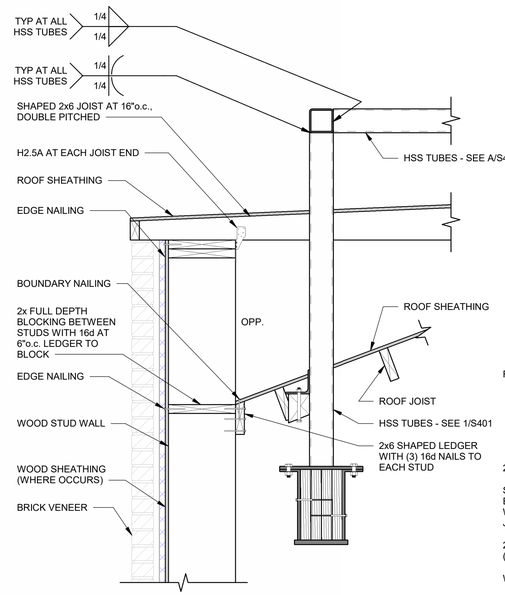

DETAIL AT STEEPLE

SCALE : NONE

2 S401

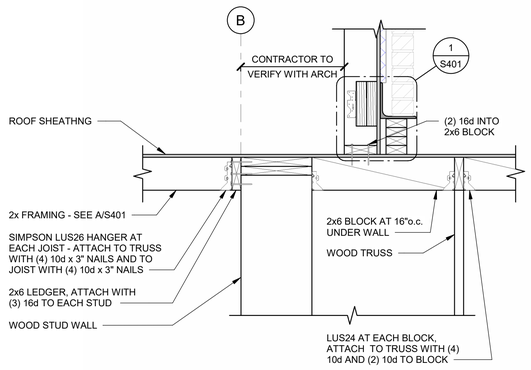

DETAIL AT WALL

SCALE : NONE

3 S401

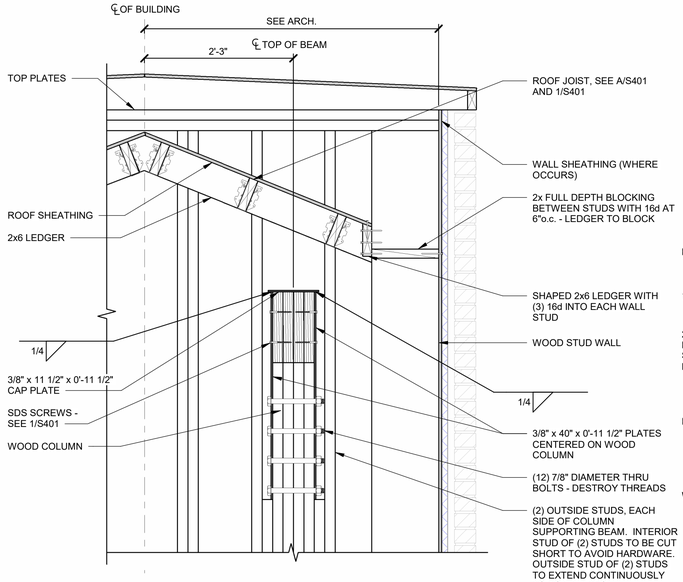

DETAIL AT STEEPLE - FRONT WALL

SCALE : NONE

4 S401

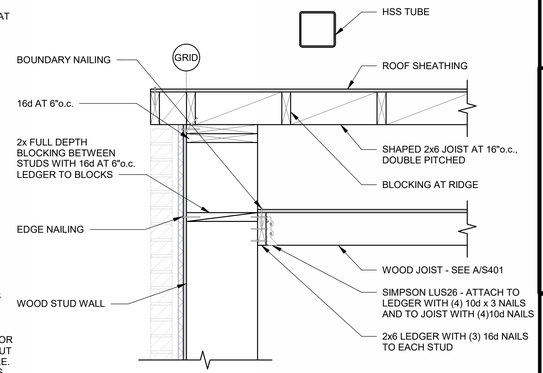

ROOF FRAMING AT STEEPLE

SCALE : NONE

5 S401

bhd ARCHITECTS
www.bhdarchitects.com
Phone 801.571.0010
Fax 801.571.0303
Toll Free 888.571.0010
65 East Wadsworth Park Drive
Suite 205 Draper, Utah 84020

Matthew C. McBride No. 353893 5/29/25

ARW ENGINEERS

THE CHURCH OF JESUS CHRIST OF LATTER-DAY SAINTS

Nibley 6 & Nibley UT West Stake

Approx. 3410 South 1200 West, Nibley, Utah
41.670809, -111.866775

Date: 29 May 2025
BHD #: 2403
County Parcel: 03:035:0016
Plan Series: Heritage 24
Owner #: 514.4728

Drawing Issue and Revision Schedule

#	Date	Description
1	29 May 2025	Bid Documents

Steeple Platform Framing and Details

S401

C:\Users\jackson\Documents\S-25705 - Nibley 6 - Her 24 - 2025_jacksonQEM82.rvt
5/20/2025 3:09:50 PM

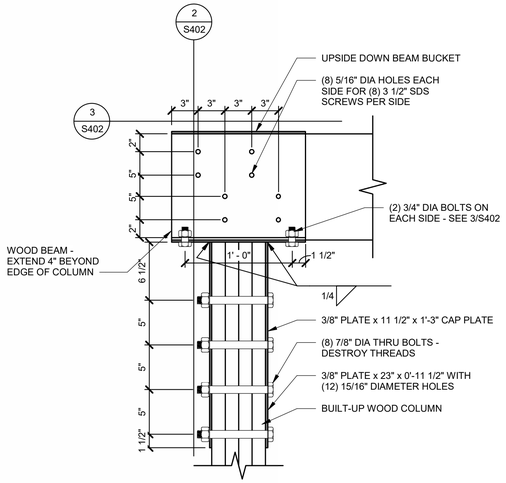

BEAM-TO-COLUMN ON GRID B

1 S402

SCALE : NONE

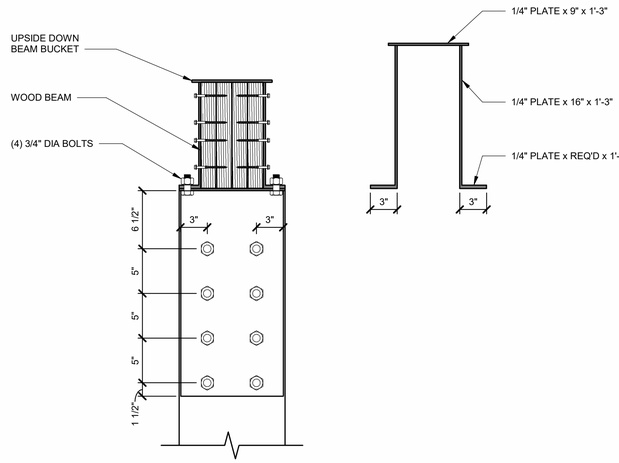

SECTION VIEW OF BEAM-TO-COLUMN ON GRID B

2 S402

SCALE : NONE

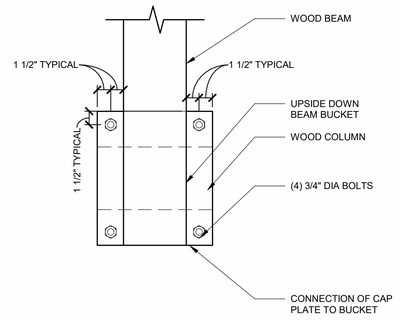

TOP VIEW OF BEAM-TO-COLUMN ON GRID B

3 S402

SCALE : NONE

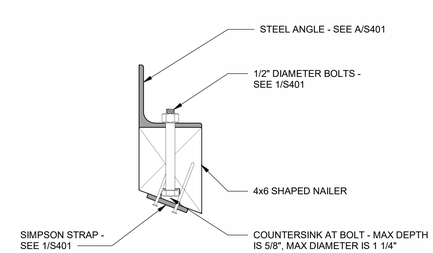

STRAP TO STEEPLE SUPPORT STRUCTURE

4 S402

SCALE : NONE

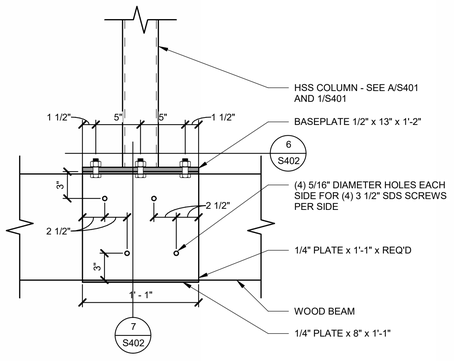

U-BUCKET FOR COLUMN-TO-BEAM CONNECTION

5 S402

SCALE : NONE

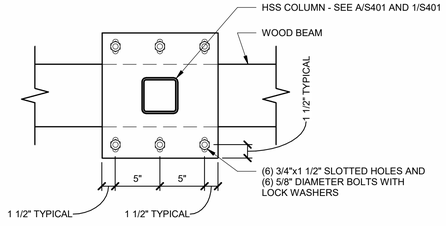

TOP VIEW OF U-BUCKET

6 S402

SCALE : NONE

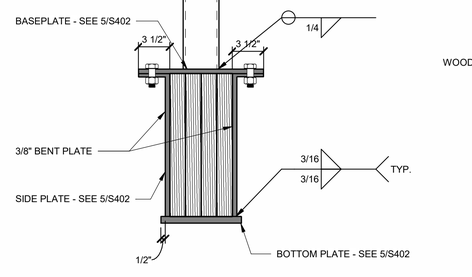

SECTION VIEW OF BUCKET

7 S402

SCALE : NONE

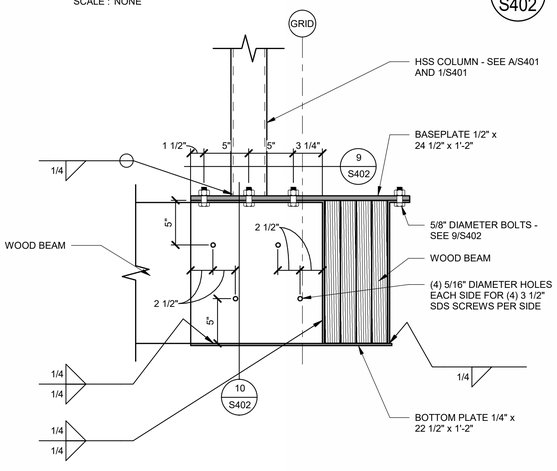

SIDE VIEW OF T-BUCKET

8 S402

SCALE : NONE

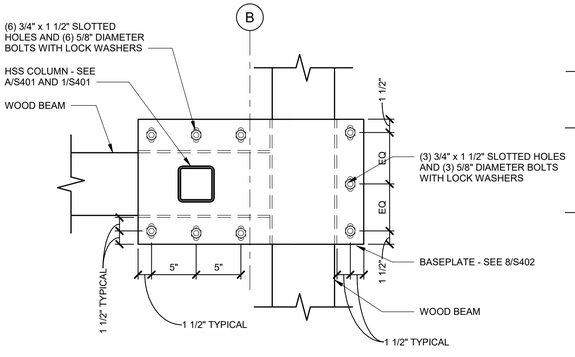

TOP VIEW OF T-BUCKET

9 S402

SCALE : NONE

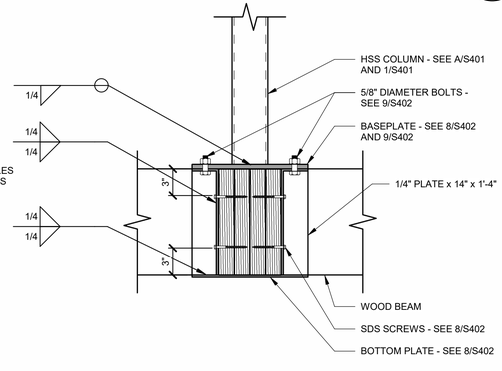

SECTION VIEW OF T-BUCKET

10 S402

SCALE : NONE

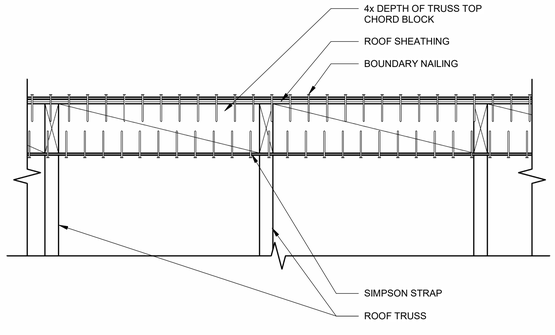

METAL COIL STRAP DETAIL

11 S402

SCALE : NONE

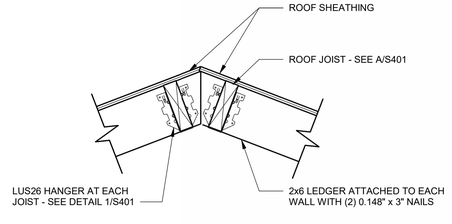

RIDGE SECTION, LOW FRAMING

12 S402

SCALE : NONE

bhd ARCHITECTS
www.bhdarchitects.com
Phone 801.571.0010
Fax 801.571.0303
Toll Free 888.571.0010
65 East Wadsworth Park Drive
Suite 205 Draper, Utah 84020

PROFESSIONAL STRUCTURAL ENGINEER
Matthew C. McBride
No. 353893
5/29/25
STATE OF UTAH

ARW ENGINEERS
Provo, Utah Office
Logan, Idaho Office
www.arwengineers.com

THE CHURCH OF JESUS CHRIST OF LATTER-DAY SAINTS

Nibley 6 & Nibley UT West Stake

Approx. 3410 South 1200 West, Nibley, Utah
41.670809, -111.860775

Owner #: 514-4728
Plan Series: Heritage 24
County Parcel: 03:050:0016
BHD #: 2403
Date: 29 May 2025

Drawing Issue and Revision Schedule

#	Date	Description
1	29 May 2025	Bid Documents

Steeple Details

S402

C:\Users\jackson\Documents\S-25705 - Nibley 6 - Her 24 - 2025_jackson@EMB2.rvt
5/20/2025 3:09:51 PM

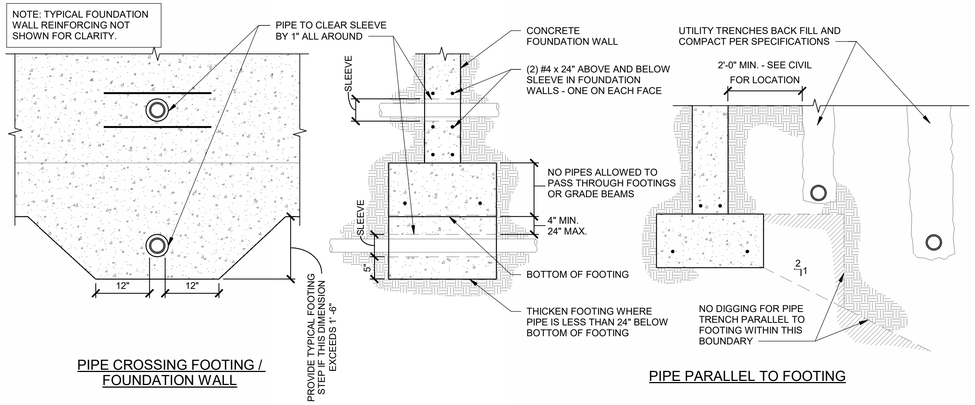

TYPICAL PIPE PERPENDICULAR AND PARALLEL TO FOOTING

SCALE : NONE

1 S501

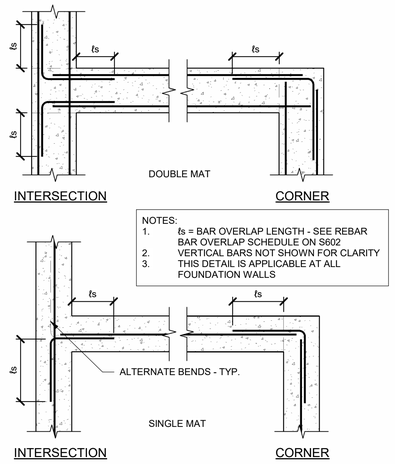

TYPICAL REINFORCING AT INTERSECTIONS IN CONCRETE WALLS

SCALE : NONE

2 S501

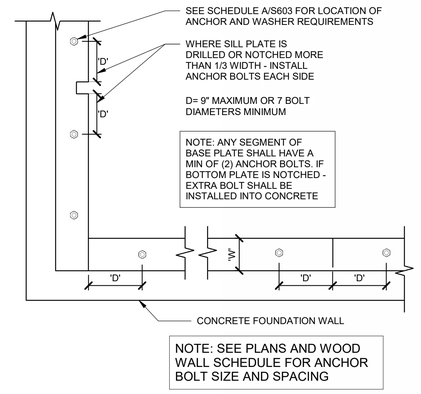

TYPICAL SILL PLATE BOLTING DETAIL

SCALE : NONE

3 S501

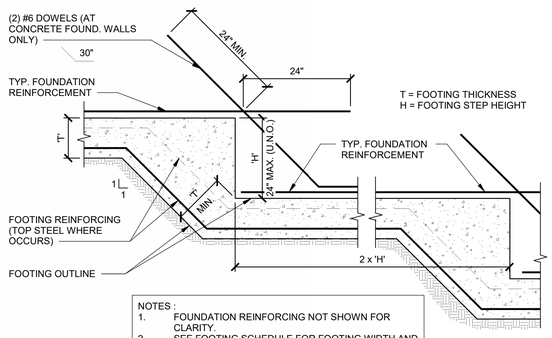

TYPICAL STEPPED FOOTING

SCALE : NONE

4 S501

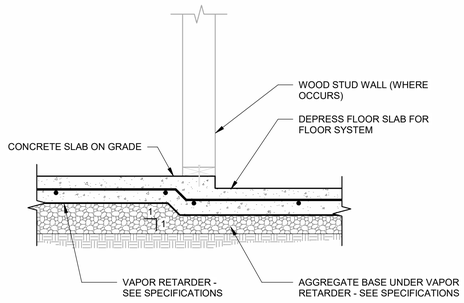

TYPICAL NON-STRUCTURAL WOOD STUD WALL AT DEPRESSED CONCRETE SLAB ON GRADE

SCALE : NONE

5 S501

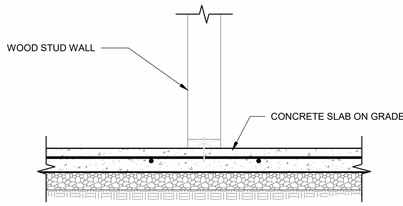

TYPICAL NON-STRUCTURAL STUD AT SLAB ON GRADE

SCALE : NONE

6 S501

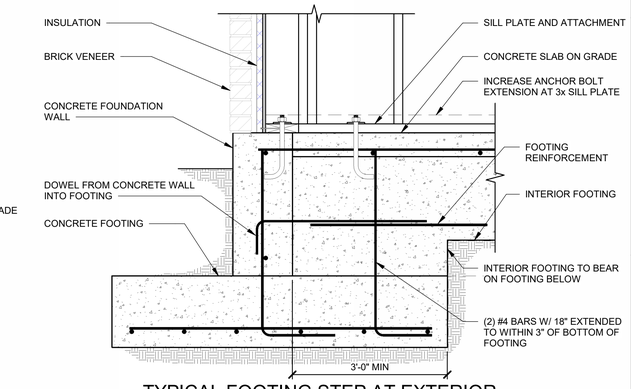

TYPICAL FOOTING STEP AT EXTERIOR FOUNDATION WALL

SCALE : NONE

7 S501

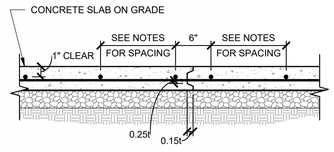

CONSTRUCTION JOINT

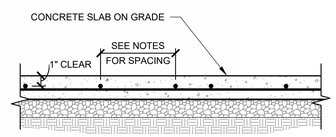

TYPICAL SLAB ON GRADE DETAILS

SCALE : NONE

8 S501

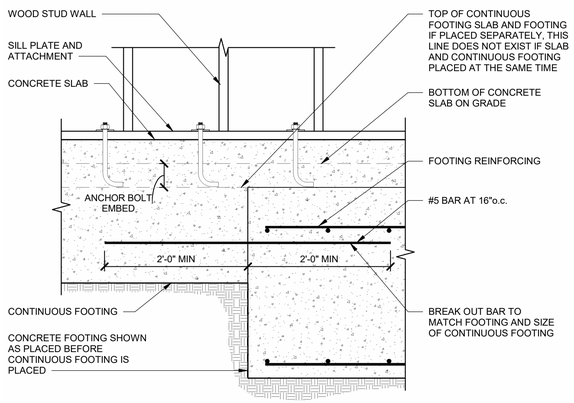

TYPICAL CONNECTION OF SPOT TO CONTINUOUS FOOTING WHEN FTGS PLACED AT DIFFERENT TIMES

SCALE : NONE

9 S501

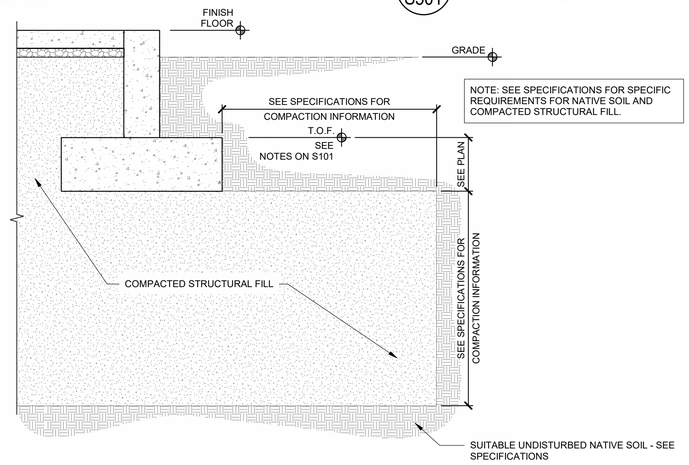

TYPICAL FOOTING OVER COMPACTED STRUCTURAL FILL

SCALE : NONE

10 S501

bhd ARCHITECTS
www.bhdarchitects.com
Phone 801.571.0010
Fax 801.571.0303
Toll Free 888.571.0010
65 East Wadsworth Park Drive
Suite 205 Draper, Utah 84020

Matthew C. McBride No. 353893 5/29/25 STATE OF UTAH

ARW ENGINEERS

THE CHURCH OF JESUS CHRIST OF LATTER-DAY SAINTS

Nibley 6 & Nibley UT West Stake

Approx. 3410 South 1200 West, Nibley, Utah
41.670809, -111.860775

Owner #: 514-4728
Plan Series: Heritage 24
County Parcel: 03:050:0016
BHD #: 2403
Date: 29 May 2025

Drawing Issue and Revision Schedule

#	Date	Description
1	29 May 2025	Bid Documents

Foundation Details

S501

C:\Users\jacksons\Documents\S-25705 - Nibley 6 - Her 24 - 2025_jacksonpDEM82.rvt

5/20/2025 3:09:52 PM

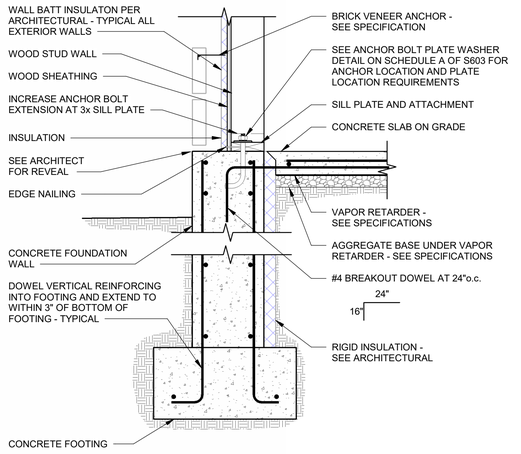

SECTION AT EXTERIOR WALL

SCALE : NONE

1 S502

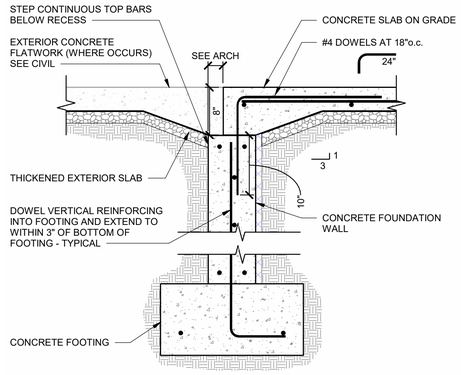

FOUNDATION WALL RECESS AT OPENINGS

SCALE : NONE

2 S502

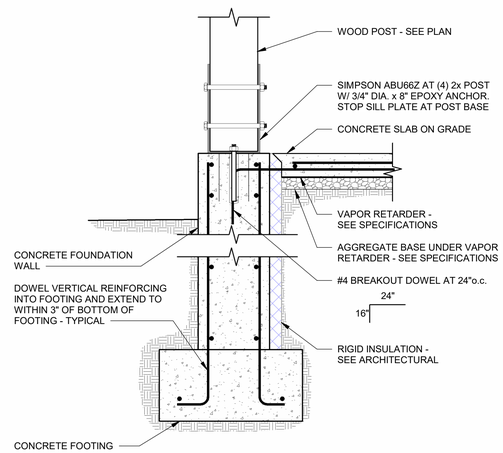

SECTION AT EXTERIOR WALL

SCALE : NONE

3 S502

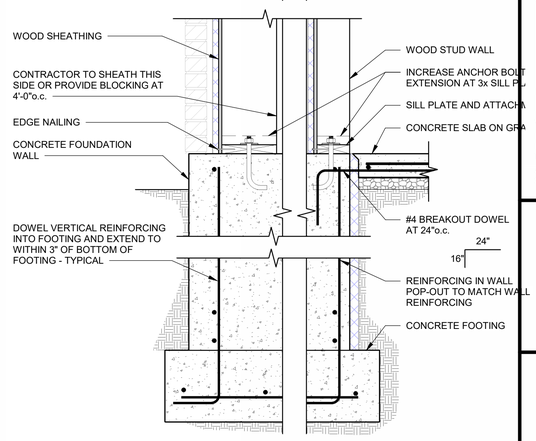

STANDARD WALL POP-OUT

SCALE : NONE

4 S502

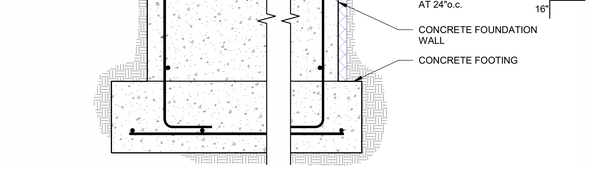

DOUBLE WALL POP-OUT

SCALE : NONE

5 S502

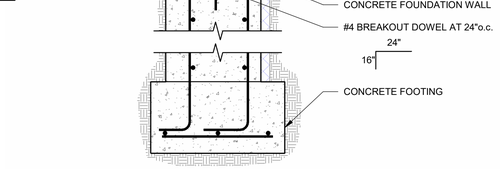

NARROW WALL POP-OUT

SCALE : NONE

6 S502

HOLDOWN ANCHOR ATTACHMENT[2]			
SIMPSON HOLD DOWN MODEL NO.	ATTACHMENT[1] FASTENERS	EMBEDMENT DEPTH[3]	ANCHOR BOLT[1,6]
HDU2-SDS2.5	(6) SDS 1/4" x 2 1/2"	1'-0"	5/8" DIAMETER A36 ROD WITH DOUBLE NUT AND WASHER
HDU5-SDS2.5	(14) SDS 1/4" x 2 1/2"	1'-0"	5/8" DIAMETER A36 ROD WITH DOUBLE NUT AND WASHER
HDU8-SDS2.5	(20) SDS 1/4" x 6"	1'-6"	7/8" DIAMETER A36 ROD WITH DOUBLE NUT[4] AND WASHER
HDU11-SDS2.5	(30) SDS 1/4" x 6"	1'-6"	1" DIAMETER A36 ROD WITH DOUBLE[5] NUT AND WASHER

NOTES:

1. ALL FASTENERS FOR PRESERVATIVE AND TREATED WOOD SHALL BE HOT DIPPED ZINC COATED GALVANIZED STEEL, STAINLESS STEEL, SILICONE BRONZE OR COPPER, UNLESS WOOD IS BORATE TREATED. EXCEPTION: PLAIN CARBON STEEL FASTENERS, INCLUDING NUTS AND WASHERS IN SBX/DOT AND ZINC BORATE PRESERVATIVE-TREATED WOOD INSTALLED IN AN INTERIOR, DRY ENVIRONMENT ARE PERMITTED.
2. ALL WOOD COLUMNS TO BE NAILED OR BOLTED TOGETHER PER SCHEDULE ON S603 PRIOR TO HOLDOWN INSTALLATION.
3. EMBEDMENT DEPTH, *te*, IS TO BE FROM TOP OF FOUNDATION WALL OR BOTTOM OF SLAB ON GRADE.
4. SEE 6/S503 FOR PIER REINFORCING.
5. ENSURE THAT AT LEAST (1) #4 BAR, FOUNDATION VERTICAL REINFORCING BAR, IS WITHIN 6" OF THE ANCHOR BOLT. IF VERTICAL BAR IS NOT PRESENT, ADD AT LEAST (1) #4 BAR VERTICAL DOWEL, EMBEDDED IN FOOTING PER 1/S502.
6. HOLDOWN ANCHORS TO BE CENTERED IN STUD WALL, UNLESS OTHERWISE NOTED.

HOLD-DOWN ANCHOR BOLT SCHEDULE

SCALE : NONE

9 S502

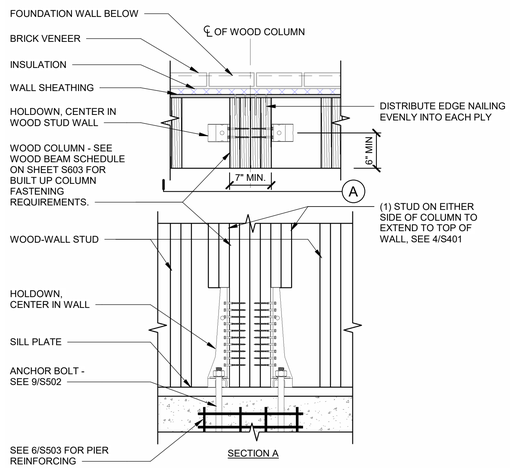

HOLD-DOWN AT STEEPLE ANCHORAGE

SCALE : NONE

10 S502

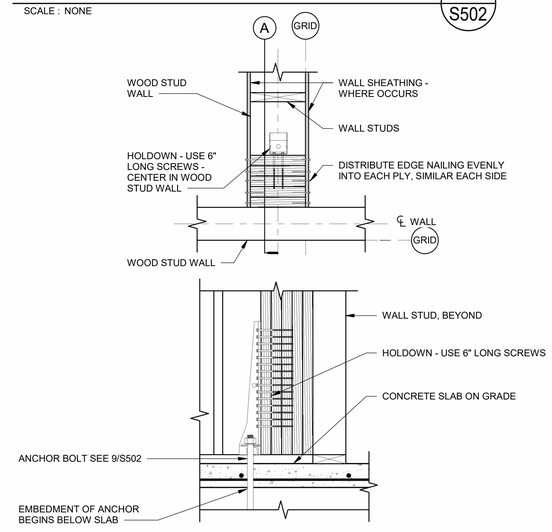

BEARING WALL DETAIL AT DEPRESSED SLAB

SCALE : NONE

7 S502

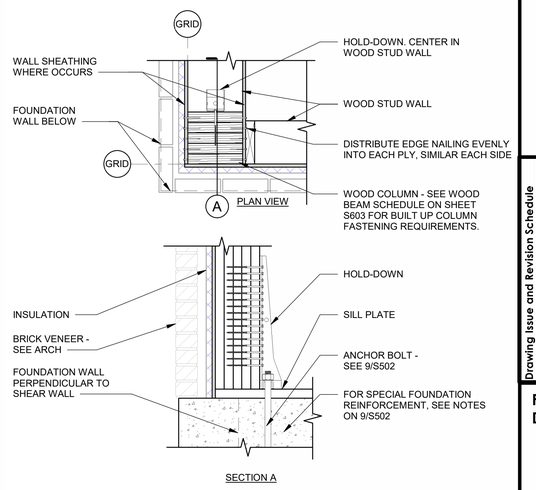

INTERIOR CONCRETE FOOTING

SCALE : NONE

8 S502

HOLD-DOWN AT CORNER

SCALE : NONE

12 S502

bhd ARCHITECTS
www.bhdarchitects.com
Phone 801.571.0010
Fax 801.571.0303
Toll Free 888.571.0010
65 East Wadsworth Park Drive
Suite 205 Draper, Utah 84020

Matthew C. McBride No. 353893 5/29/25 STATE OF UTAH

ARW ENGINEERS
Provo, Utah Boise, Idaho Las Vegas, Nevada
www.arwengineers.com

THE CHURCH OF JESUS CHRIST OF LATTER-DAY SAINTS

Nibley 6 & Nibley UT West Stake

Approx. 3410 South 1200 West, Nibley, Utah
41.672809, -111.840775

BHD #: 2403
County Parcel: 03:050:0016
Date: 29 May 2025
Plan Series: Heritage 24
Owner #: 514-4728

Drawing Issue and Revision Schedule

#	Date	Description
1	29 May 2025	Bid Documents

Foundation Details

S502

C:\Users\jackson\Documents\S-25705 - Nibley 6 - Her 24 - 2025_jackson@BMB2.rvt
5/20/2025 3:09:54 PM

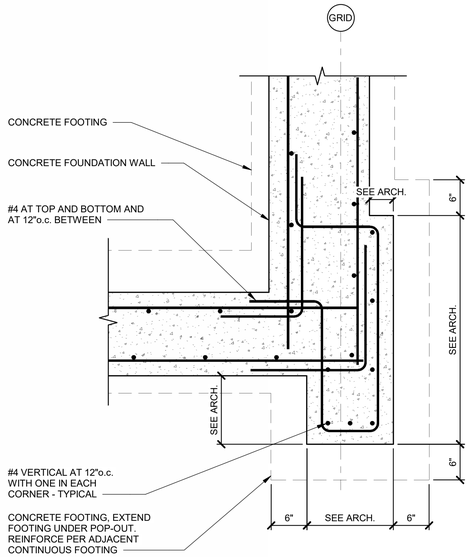

FOUNDATION AT GRID B POP-OUT CONFIGURATION AT FRONT OF BUILDING

SCALE : NONE

1 S503

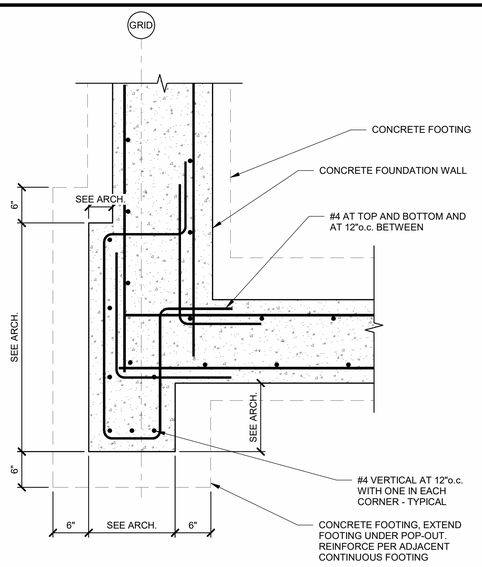

FOUNDATION AT GRID B POP-OUT CONFIGURATION AT FRONT OF BUILDING

SCALE : NONE

2 S503

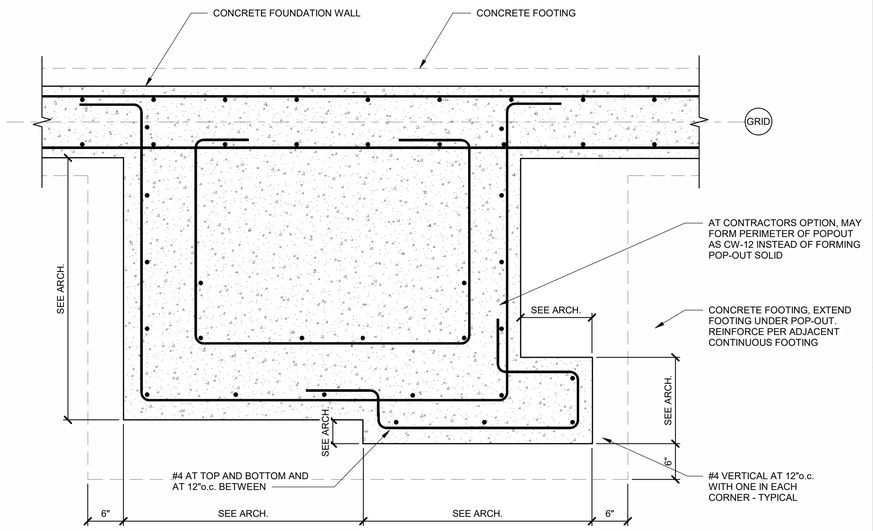

FOUNDATION POP-OUT CONFIGURATION AT ENTRIES

SCALE : NONE

3 S503

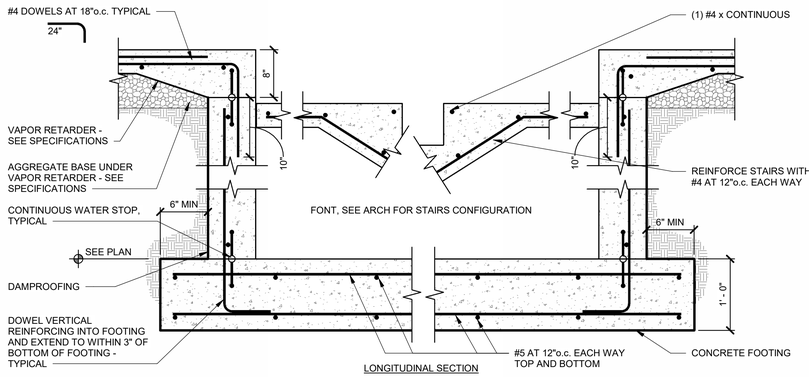

STAIR DETAIL AT BAPTISMAL FONT

SCALE : NONE

4 S503

NOTE: SEE ARCH FOR FONT DIMENSIONS

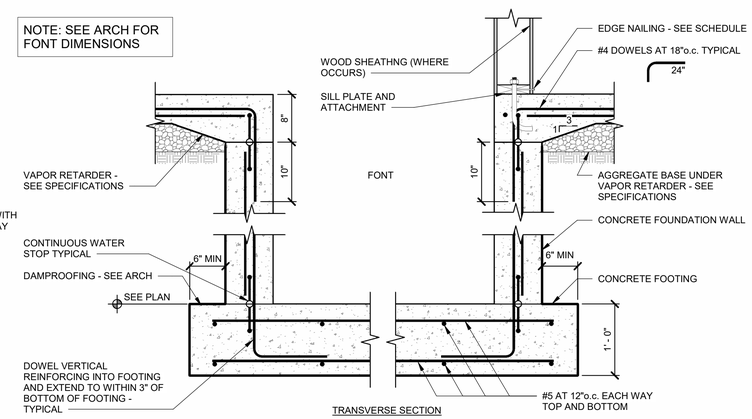

FOOTING AND FOUNDATION AT BAPTISMAL FONT

SCALE : NONE

5 S503

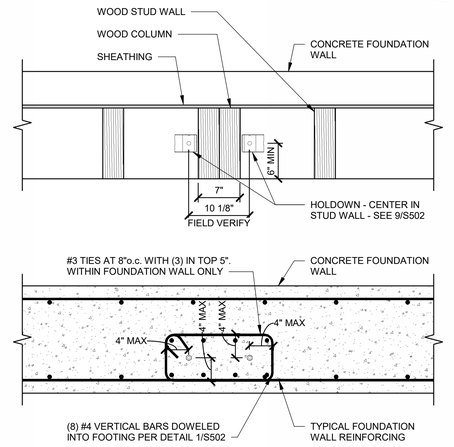

HOLD-DOWN PIER AT STEEPLE ANCHORAGE

SCALE : NONE

6 S503

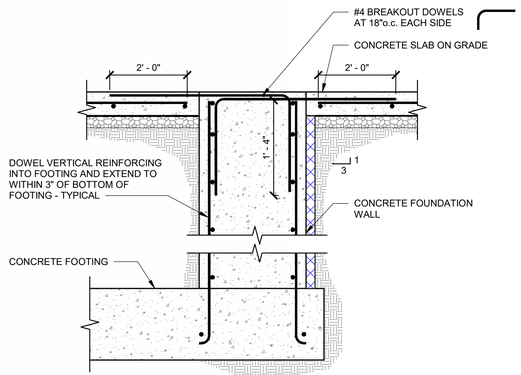

FOUNDATION WALL NEAR GRID B AT STEEPLE POP-OUT

SCALE : NONE

7 S503

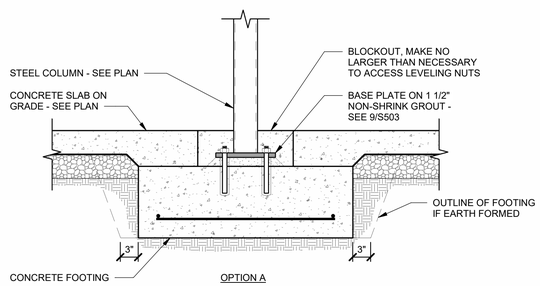

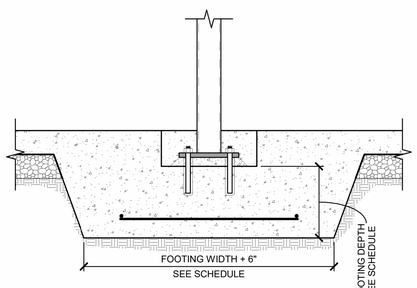

DETAIL

SCALE : NONE

8 S503

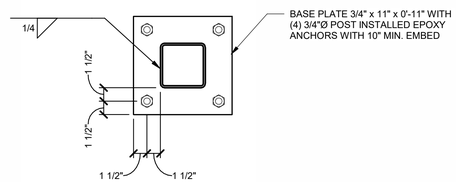

DETAIL

SCALE : NONE

9 S503

bhd ARCHITECTS
www.bhdarchitects.com
Phone 801.571.0010
Fax 801.571.0303
Toll Free 888.571.0010
65 East Wadsworth Park Drive
Suite 205 Draper, Utah 84020

Matthew C. McCoy No. 353893 5/29/25 STATE OF UTAH

ARW ENGINEERS

THE CHURCH OF JESUS CHRIST OF LATTER-DAY SAINTS

Nibley 6 & Nibley UT West Stake

Approx. 3410 South 1200 West, Nibley, Utah
41.670809, -111.866775

Owner #: 514-4728
Plan Series: Heritage 24
County Parcel: 03:050:0016
BHD #: 2403
Date: 29 May 2025

Drawing Issue and Revision Schedule

#	Date	Description
1	29 May 2025	Bid Documents

Foundation Details

S503

C:\Users\jackson\Documents\S-25705 - Nibley 6 - Her 24 - 2025_jackson@EMB2.rvt
5/20/2025 3:09:55 PM

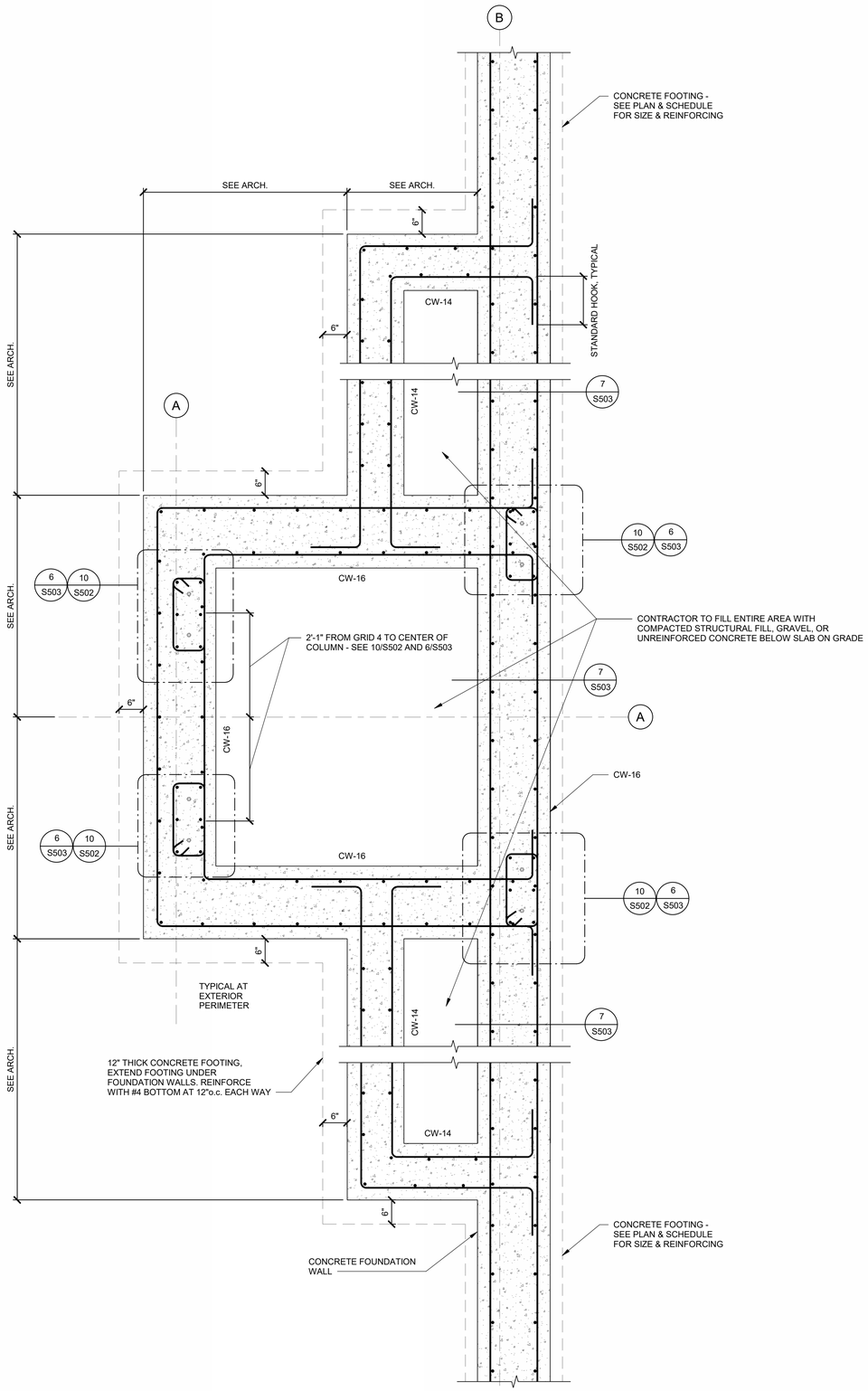

STEEPLE POP-OUT FOOTING
SCALE : NONE
1 S504

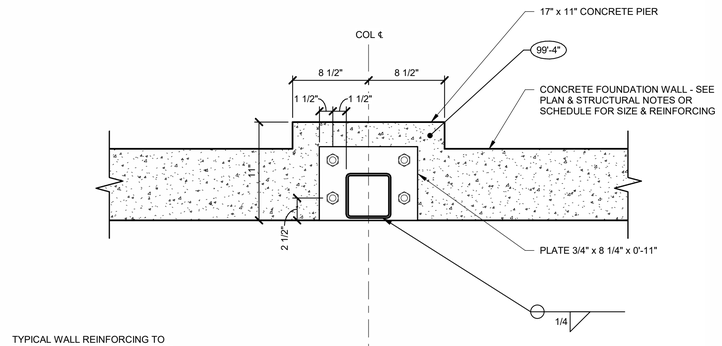

DETAIL
SCALE : NONE
2 S504

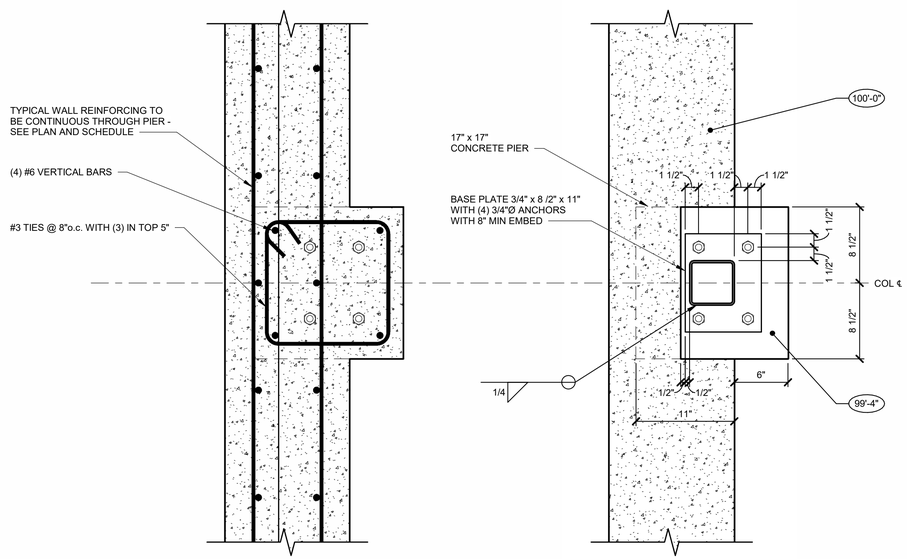

DETAIL
SCALE : NONE
3 S504

bhd ARCHITECTS
www.bhdarchitects.com
Phone 801.571.0010
Fax 801.571.0303
Toll Free 888.571.0010
65 East Wadsworth Park Drive
Suite 205 Draper, Utah 84020

Matthew C. McBride No. 333893 5/20/25

ARW ENGINEERS
Provo, Utah
Salt Lake City, Utah
www.arwengineers.com

THE CHURCH OF JESUS CHRIST OF LATTER-DAY SAINTS

Nibley 6 &
Nibley UT West Stake

Approx. 3410 South 1200 West, Nibley, Utah
41.670809, -111.866775

BHD #: 2403
County Parcel: 03050:0016
Plan Series: Heritage 24
Owner #: 514-4728
Date: 29 May 2025

Drawing Issue and Revision Schedule

#	Date	Description
1	29 May 2025	Bid Documents

Foundation Details

S504

C:\Users\jacksonq\Documents\S-25705 - Nibley 6 - Her 24 - 2025_jacksonQEMB2.rvt
5/20/2025 3:09:56 PM

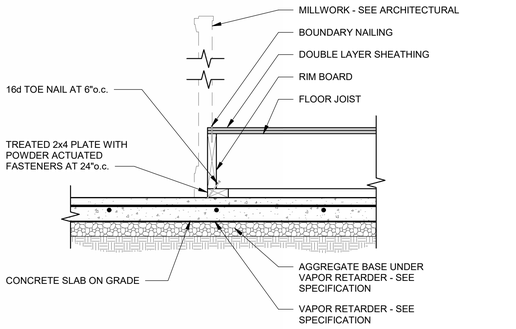

ROSTRUM FRONT EDGE
SCALE : NONE — 1 / S511

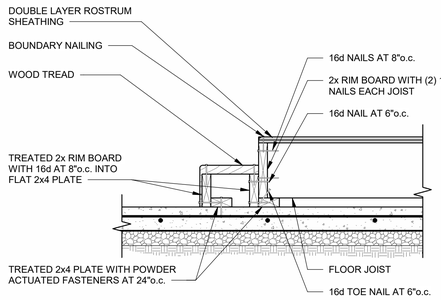

STAIRS
SCALE : NONE — 2 / S511

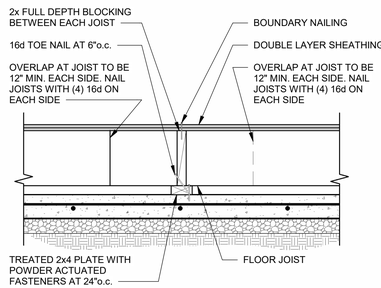

JOIST BEARING
SCALE : NONE — 3 / S511

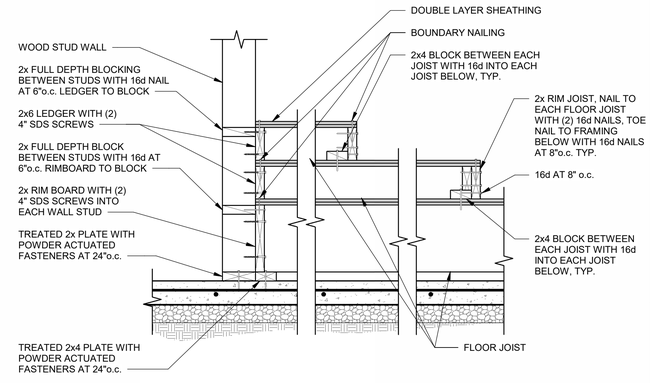

ROSTRUM OVERBUILD
SCALE : NONE — 4 / S511

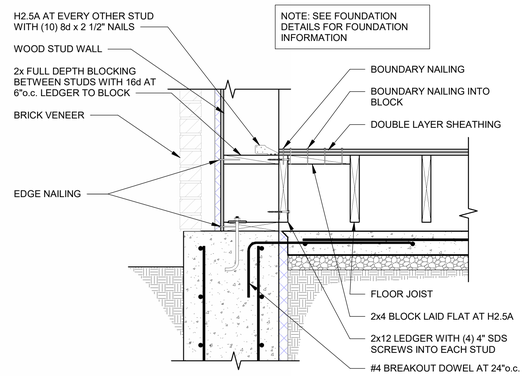

ROSTRUM DETAIL AT EXTERIOR WALL
SCALE : NONE — 5 / S511

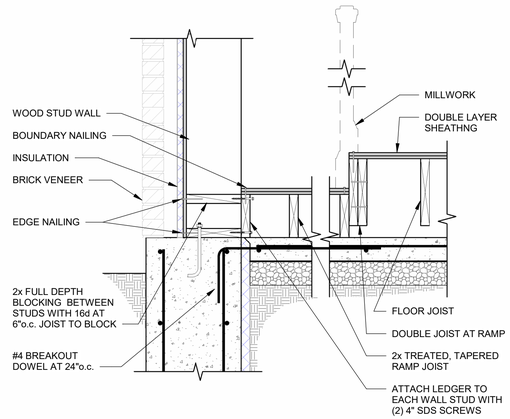

ROSTRUM RAMP AT EXTERIOR WALL
SCALE : NONE — 6 / S511

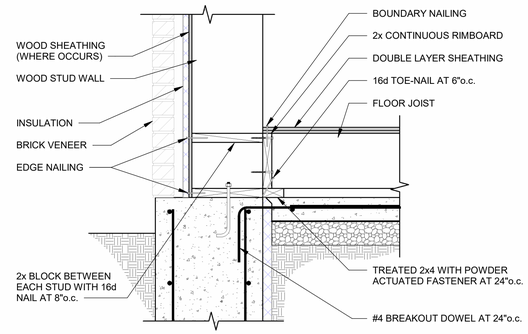

ROSTRUM AT EXTERIOR FRONT WALL
SCALE : NONE — 7 / S511

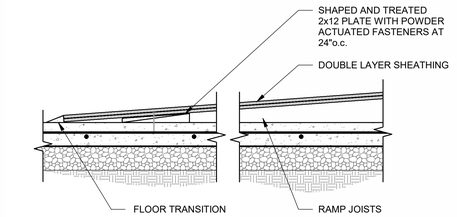

EDGE AT BEGINING OF RAMP
SCALE : NONE — 8 / S511

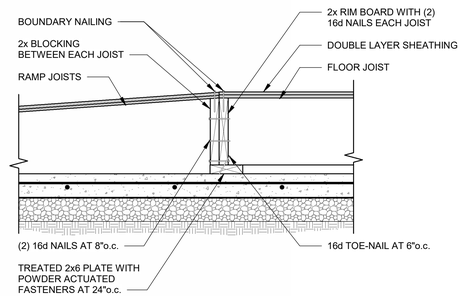

RAMP AT END
SCALE : NONE — 9 / S511

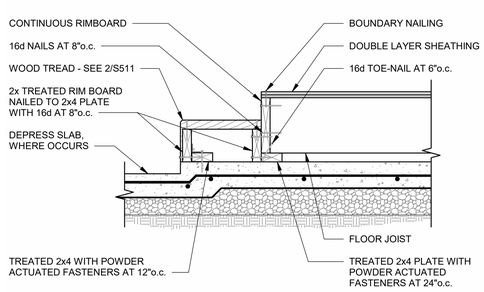

PLATFORM STAIRS
SCALE : NONE — 10 / S511

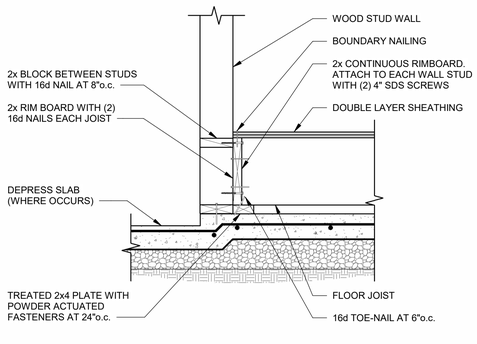

FRONT EDGE OF PLATFORM
SCALE : NONE — 11 / S511

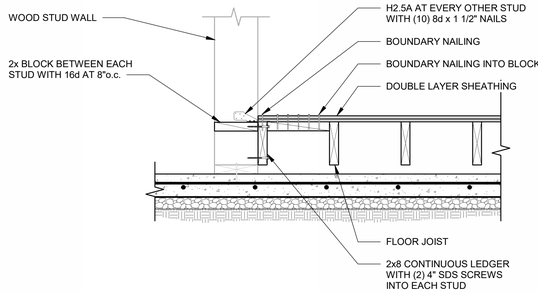

PLATFORM DETAIL AT WALL
SCALE : NONE — 12 / S511

bhd ARCHITECTS
www.bhdarchitects.com
Phone 801.571.0010
Fax 801.571.0303
Toll Free 888.571.0010
65 East Wadsworth Park Drive
Suite 205 Draper, Utah 84020

Matthew C. McBride No. 353893 5/29/25 STATE OF UTAH

ARW ENGINEERS

THE CHURCH OF JESUS CHRIST OF LATTER-DAY SAINTS

Nibley 6 & Nibley UT West Stake

Approx. 3410 South 1200 West, Nibley, Utah
41.670809, -111.860775

Owner #: 514-4728
Plan Series: Heritage 24
County Parcel: 03:050:0016
BHD #: 2403
Date: 29 May 2025

Drawing Issue and Revision Schedule

#	Date	Description
1	29 May 2025	Bid Documents

Rostrum Framing Details

S511

C:\Users\jackson\Documents\S-25705 - Nibley 6 - Her 24 - 2025_jackson@EXHB2.rvt

5/20/2025 3:09:57 PM

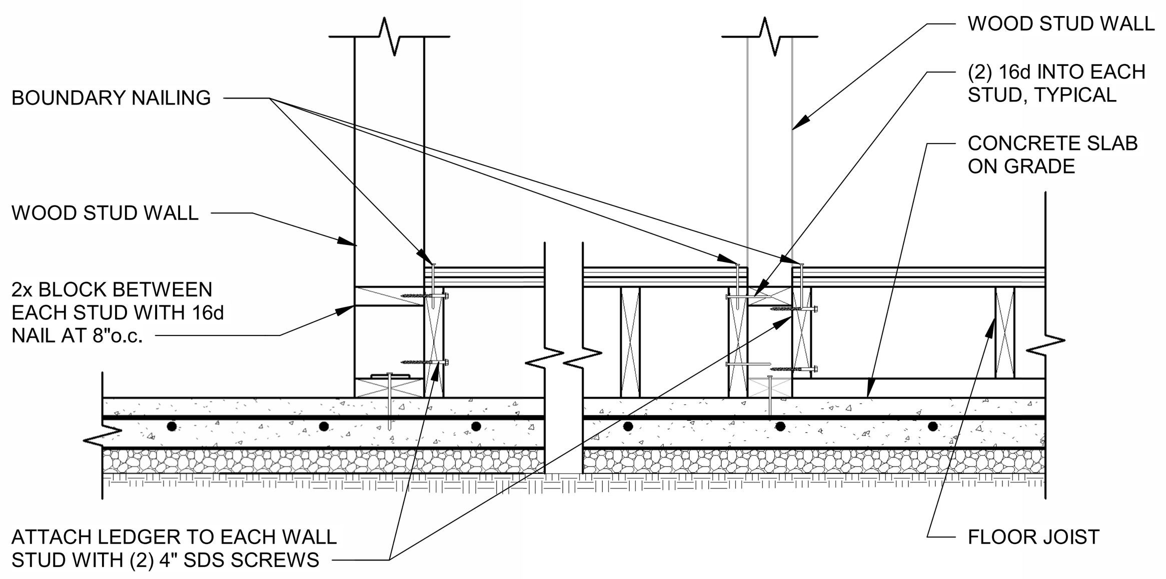

PLATFORM RAMP
SCALE : NONE
1
S512

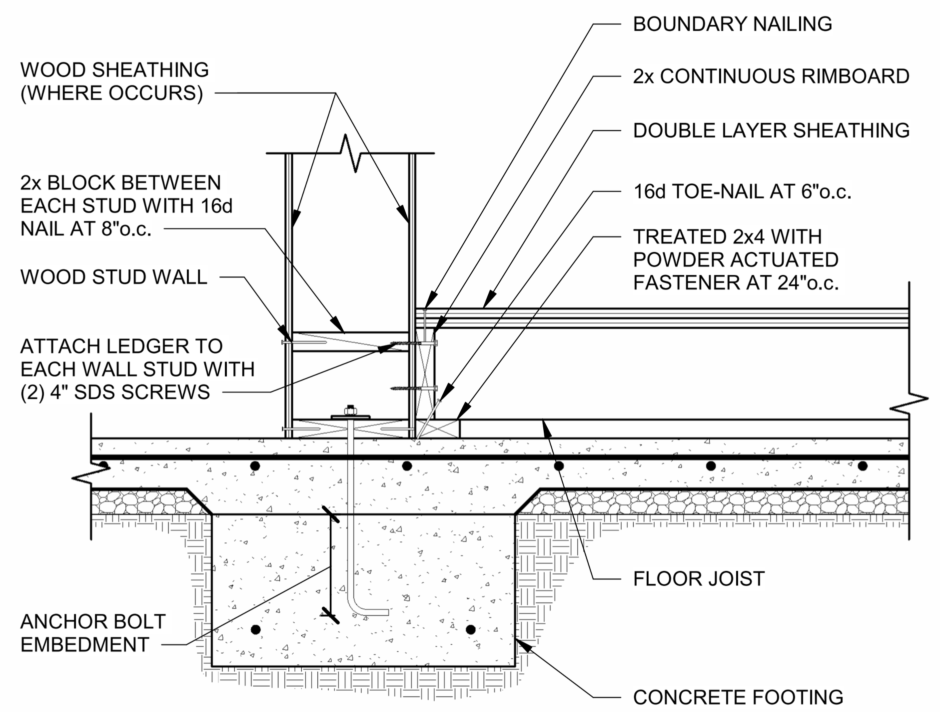

PLATFORM AT WALL
SCALE : NONE
2
S512

C:\Users\jacksonp\Documents\S-25705 - Nibley 6 - Her 24 - 2025_jacksonpQEMB2.rvt
5/20/2025 3:09:59 PM

bhd ARCHITECTS
www.bhdarchitects.com
Phone 801.571.0010
Fax 801.571.0303
Toll Free 888.571.0010
65 East Wadsworth Park Drive
Suite 205 Draper, Utah 84020

Matthew C. McBride No. 353893 5/29/25 State of Utah

ARW ENGINEERS

THE CHURCH OF JESUS CHRIST OF LATTER-DAY SAINTS

Nibley 6 & Nibley UT West Stake

Approx. 3410 South 1200 West, Nibley, Utah
41.670809, -111.860775

Date: 29 May 2025 | BHD #: 2403 | County Parcel: 035050016 | Plan Series: Heritage 24 | Owner #: 514-4728

Drawing Issue and Revision Schedule

#	Date	Description
1	29 May 2025	Bid Documents

Rostrum Framing Details

S512

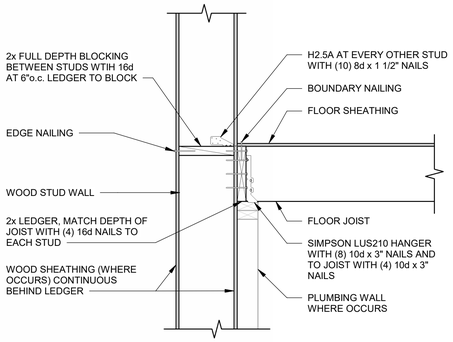

EQUIPMENT PLATFORM TO WALL CONNECTION

1 / S513

SCALE : NONE

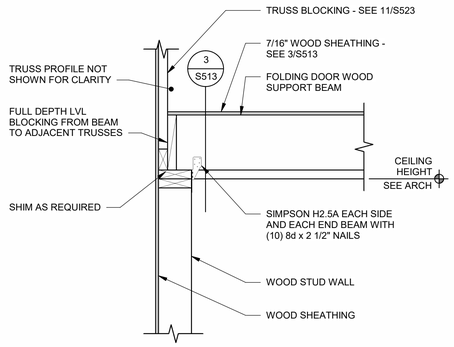

PARTITION DOOR SUPPORT AT EXTERIOR WALL

2 / S513

SCALE : NONE

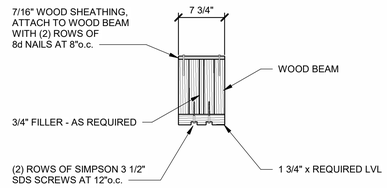

PARTITION DOOR BEAM SECTION

3 / S513

SCALE : NONE

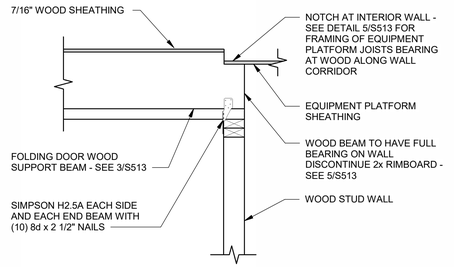

PARTITION DOOR SUPPORT AT INTERIOR WALL

4 / S513

SCALE : NONE

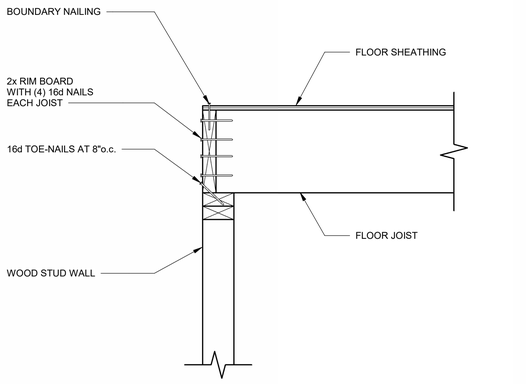

EQUIPMENT PLATFORM FLOOR JOISTS BEARING AT WOOD STUD WALL

5 / S513

SCALE : NONE

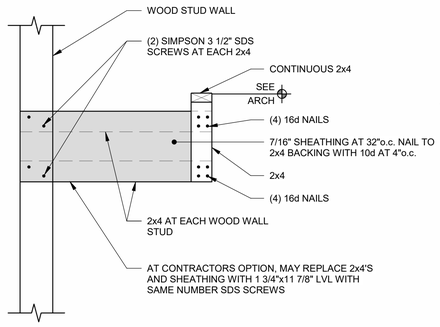

CHAPEL LIGHT COVE DETAIL

6 / S513

SCALE : NONE

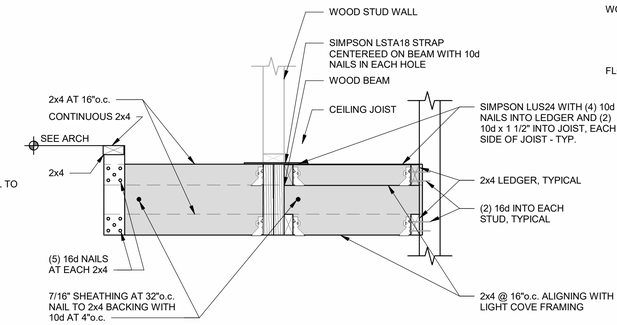

CHAPEL LIGHT COVE DETAIL AT BEAM

7 / S513

SCALE : NONE

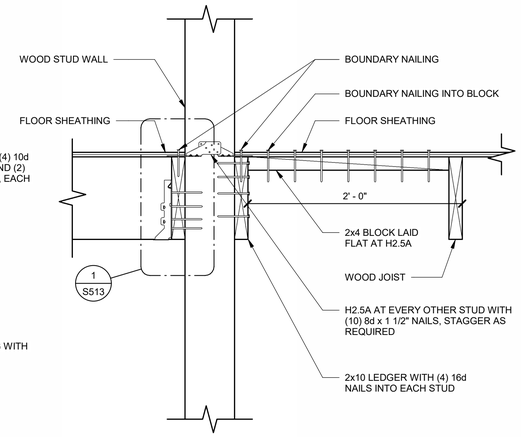

FLOOR CONDITION AT RESTROOM

8 / S513

SCALE : NONE

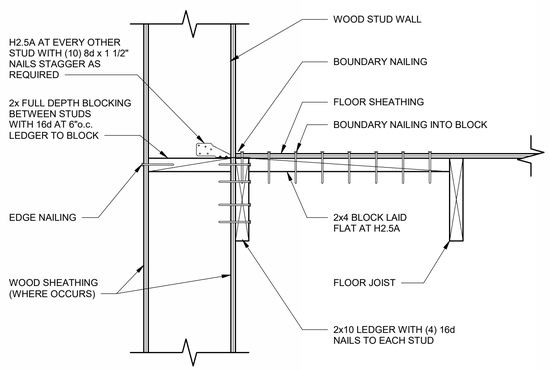

FLOOR EDGE CONDITION AT WALL

9 / S513

SCALE : NONE

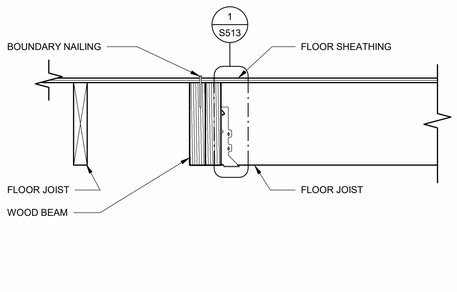

JOIST TO BEAM CONNECTION

10 / S513

SCALE : NONE

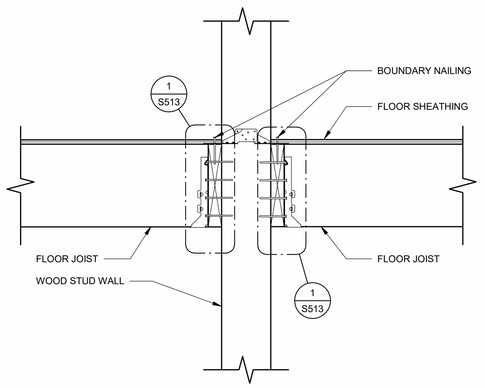

FLOOR JOISTS BEARING AT WALL

11 / S513

SCALE : NONE

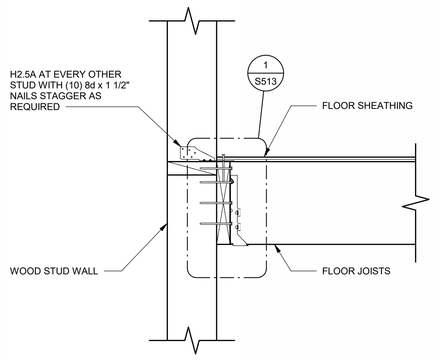

EQUIPMENT PLATFORM TO WALL CONNECTION

12 / S513

SCALE : NONE

bhd ARCHITECTS
www.bhdarchitects.com
Phone 801.571.0010
Fax 801.571.0303
Toll Free 888.571.0010
65 East Wadsworth Park Drive
Suite 205 Draper, Utah 84020

Matthew C. McBride No. 353893 5/29/25

ARW ENGINEERS

THE CHURCH OF JESUS CHRIST OF LATTER-DAY SAINTS

Nibley 6 & Nibley UT West Stake

Approx. 3410 South 1200 West, Nibley, Utah
41.672809, -111.840775

BHD #: 2403
County Parcel: 03:050:0016
Plan Series: Heritage 24
Owner #: 514-4728
Date: 29 May 2025

Drawing Issue and Revision Schedule

#	Date	Description
1	29 May 2025	Bid Documents

Equipment Platform Framing Details

S513

C:\Users\jacksonj\Documents\S-25705 - Nibley 6 - Her 24 - 2025_jacksonjQBMB2.rvt

5/20/2025 3:10:00 PM

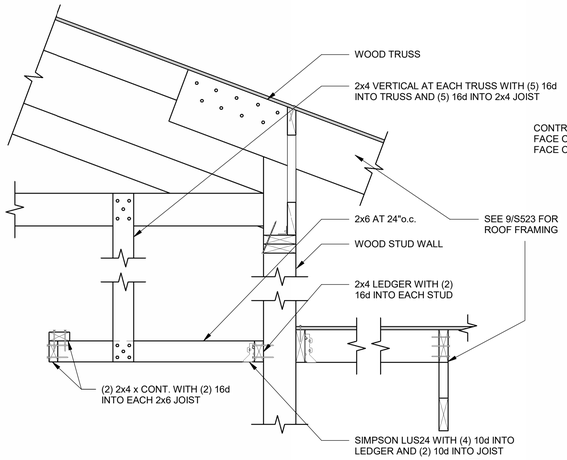

ENTRY LIGHT COVE DETAIL

SCALE : NONE

1 / S514

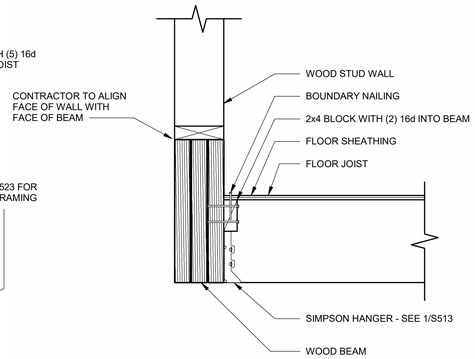

JOIST-TO-BEAM AT ENTRY

SCALE : NONE

2 / S514

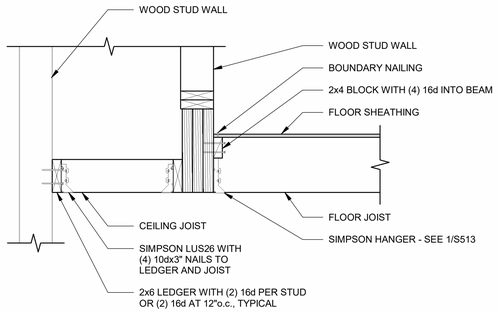

EQUIPMENT PLATFORM TO BEAM

SCALE : NONE

3 / S514

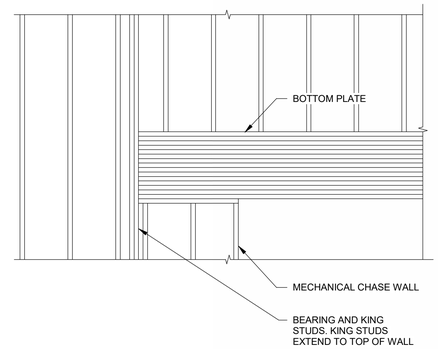

FOLDING PARTITION SECTION AT PLATFORM

SCALE : NONE

4 / S514

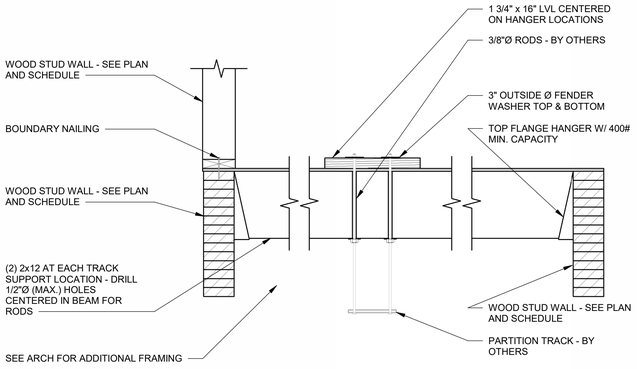

DETAIL

SCALE : NONE

5 / S514

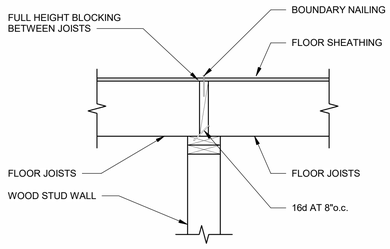

FLOOR JOISTS BEARING AT WALL

SCALE : NONE

6 / S514

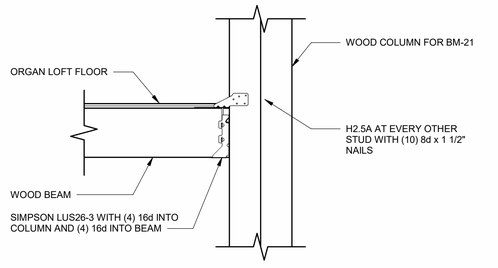

ORGAN LOFT BEAM-TO-COLUMN

SCALE : NONE

7 / S514

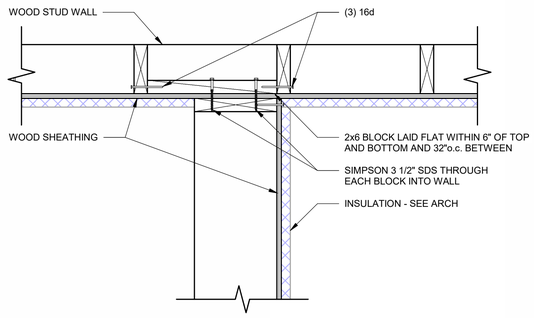

POP-OUT WALL-TO-STRUCTURAL WALL

SCALE : NONE

9 / S514

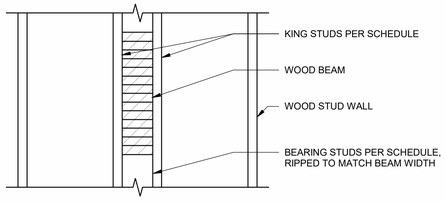

FOLDING PORTION PERP-TO-WALL BEARING

SCALE : NONE

10 / S514

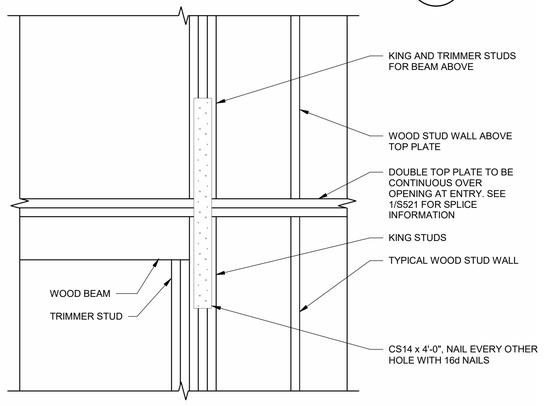

CONTINUITY OF TOP PLATES AT MAIN ENTRY

SCALE : NONE

11 / S514

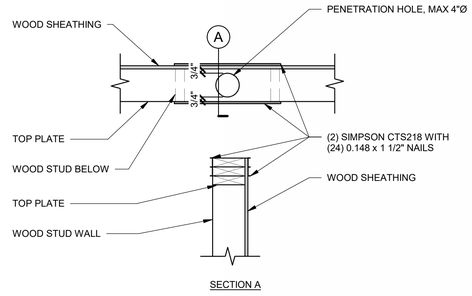

TOP PLATE REINFORCING AT GAS PIPE PENETRATION

SCALE : NONE

12 / S514

bhd ARCHITECTS
www.bhdarchitects.com
Phone 801.571.0010
Fax 801.571.0303
Toll Free 888.571.0010
65 East Wadsworth Park Drive
Suite 205 Draper, Utah 84020

PROFESSIONAL ENGINEER — Matthew C. McBride — No. 353893 — 5/29/25 — STATE OF UTAH

ARW ENGINEERS
Provo, Utah 84601
801.375.1172
www.arwengineers.com

THE CHURCH OF JESUS CHRIST OF LATTER-DAY SAINTS

Nibley 6 & Nibley UT West Stake

Approx. 3410 South 1200 West, Nibley, Utah
41.670809, -111.860775

BHD #: 2403
County Parcel: 03050000116
Plan Series: Heritage 24
Owner #: 514-4728
Date: 29 May 2025

Drawing Issue and Revision Schedule

#	Date	Description
1	29 May 2025	Bid Documents

Equipment Platform Framing Details

S514

C:\Users\jackson\Documents\S-25705 - Nibley 6 - Her 24 - 2025_jacksonQEvM82.rvt
5/20/2025 3:10:01 PM

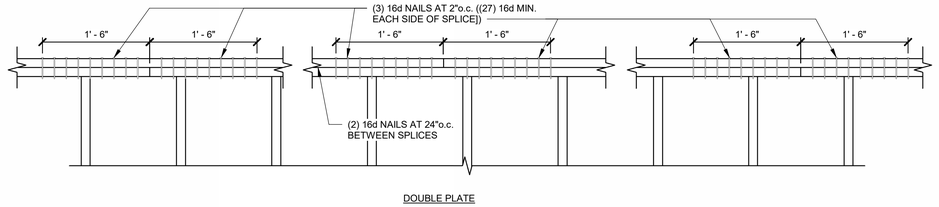

DOUBLE PLATE

TOP PLATE SPLICE (2x6 WALLS ONLY)	
HOLE SIZE	STRAPS
LESS THAN OR EQUAL TO 2 1/2" DIAMETER	NONE REQUIRED
GREATER THAN 2 1/2" DIAMTER AND LESS THAN OR EQUAL TO 3 1/2" DIAMETER	MSTC28 CENTERED BETWEEN (2) TOP PLATES WITH (16) 16d x 3 1/2" NAILS EACH END OF STRAP. DO NOT NAIL INTO PIPE
NOTE: HOLE SIZE IS TOTAL ALLOWABLE HOLE DIAMTER, NOT PIPE DIAMETER. DO NOT OVERCUT.	

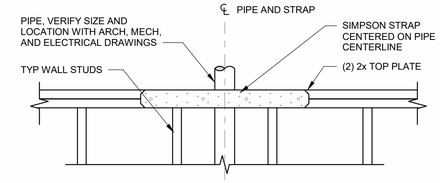

AT EXTERIOR WALL OR INTERIOR SHEAR WALL

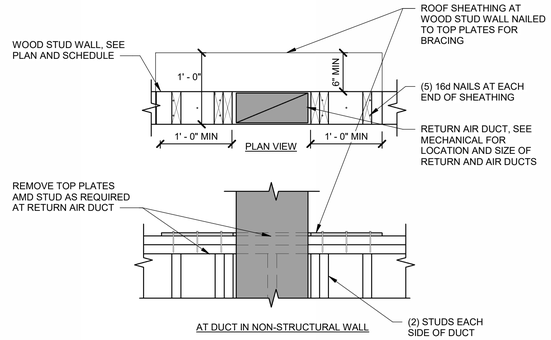

AT DUCT IN NON-STRUCTURAL WALL

NOTE:
AT CONTRACTORS OPTION MAY USE SIMPSON CS14 METAL STRAP SPLICE ACROSS NARROW FACE OF TOP PLATES WITH MINIMUM OF 16", EACH SIDE

TYPICAL TOP PLATE SPLICE DETAIL

SCALE : NONE

1 S521

TYPICAL TOP PLATE SPLICE PENETRATION SCHEDULE AT PIPE/ DUCT

SCALE : NONE

2 S521

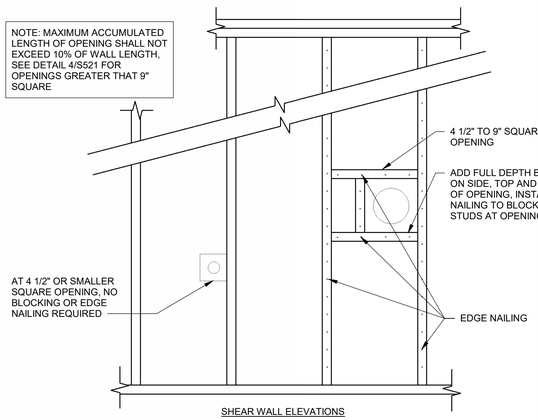

SHEAR WALL ELEVATIONS

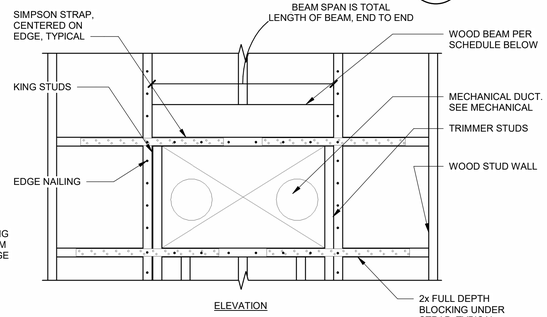

ELEVATION

BEAM SPAN	BEAM SIZE	TRIMMER	KING STUD	SIMPSON STRAP	NAILS
2'-6"	(3) 2x6	(1) 2x	(1) 2x	CS22 x 2'-0"	(24) 8d x 2 1/2"
3'-10'	(3) 2x10	(1) 2x	(1) 2x	CS18 x 2'-0"	(36) 8d x 2 1/2"
5'-2'	(3) 1 3/4"x11 7/8" LVL	(1) 2x	(1) 2x	CS16 x 2'-8"	(44) 8d x 2 1/2"

SEE DETAIL 3/S521 FOR OPENINGS < 9" SQUARE

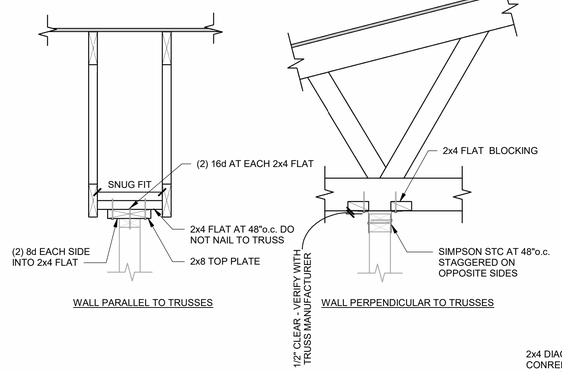

WALL PARALLEL TO TRUSSES

WALL PERPENDICULAR TO TRUSSES

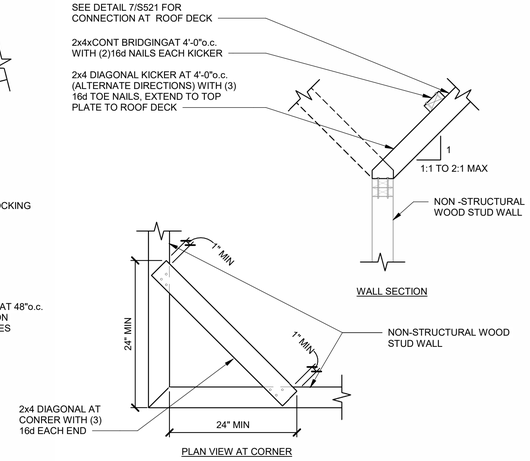

WALL SECTION

PLAN VIEW AT CORNER

TYPICAL WALL PENETRATIONS LESS THAN 9" SQUARE

SCALE : NONE

3 S521

TYPICAL WALL PENETRATIONS SCHEDULE FOR PENETRATIONS GREATER THAN 9"

SCALE : NONE

4 S521

TYPICAL NON-STRUCTURAL WALL TO UNDERSIDE OF TRUSS

SCALE : NONE

5 S521

TYPICAL NON STRUCTURAL PARTITION BRACING DETAILS

SCALE : NONE

6 S521

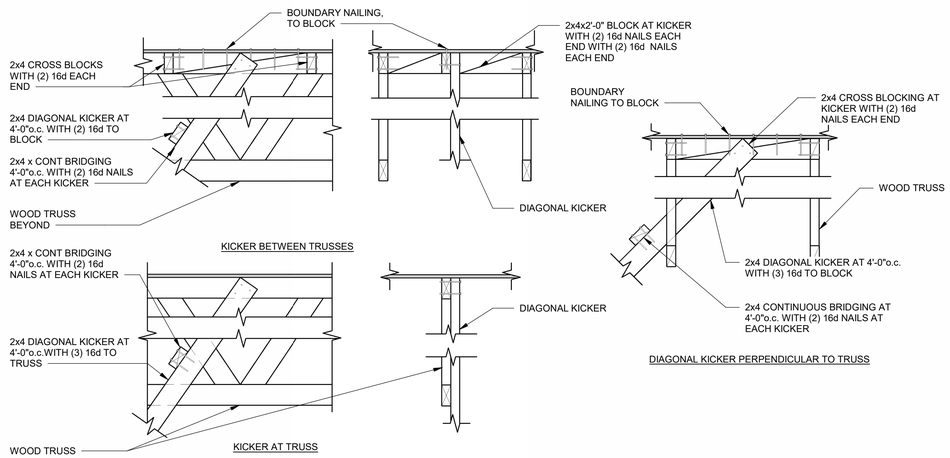

DIAGONAL KICKER PERPENDICULAR TO TRUSS

TYPICAL KICKER CONNECTIONS TO ROOF TRUSSES

SCALE : NONE

7 S521

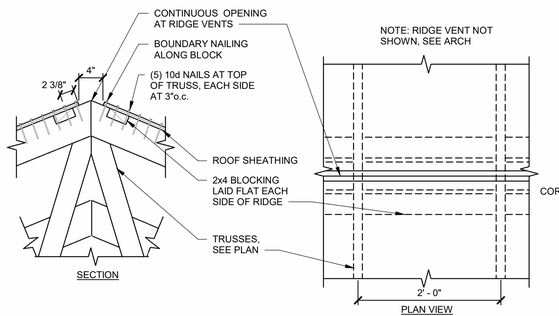

SECTION

PLAN VIEW

TYPICAL RIDGE DETAIL AT RIDGE VENT LOCATIONS

SCALE : NONE

8 S521

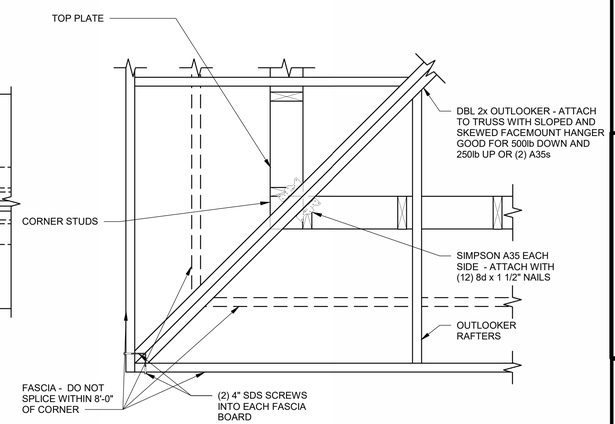

TYPICAL CORNER ROOF FRAMING PLAN VIEW

SCALE : NONE

9 S521

bhd ARCHITECTS
www.bhdarchitects.com
Phone 801.571.0010
Fax 801.571.0303
Toll Free 888.571.0010
65 East Wadsworth Park Drive
Suite 205 Draper, Utah 84020

Matthew C. McBride No. 353893 5/29/25

ARW ENGINEERS
Provo, Utah Salt Lake City, Utah
www.arwengineers.com

THE CHURCH OF JESUS CHRIST OF LATTER-DAY SAINTS

Nibley 6 & Nibley UT West Stake

Approx. 3410 South 1200 West, Nibley, Utah
41.670809, -111.840775

Owner #: 514-4728
Plan Series: Heritage 24
County Parcel: 03:050:0016
BHD #: 2403
Date: 29 May 2025

Drawing Issue and Revision Schedule

#	Date	Description
1	29 May 2025	Bid Documents

Roof Details

S521

C:\Users\jcksonp\Documents\S-25705 - Nibley 6 - Her 24 - 2025_jcksonpOEM82.rvt
5/20/2025 3:10:03 PM

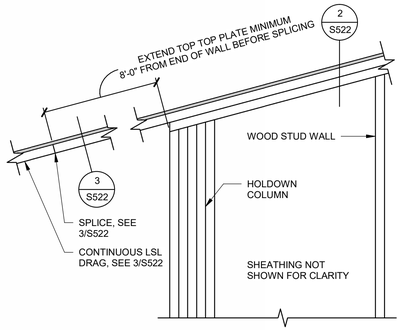

DRAG-TO-SHEAR WALL

SCALE : NONE

1 / S522

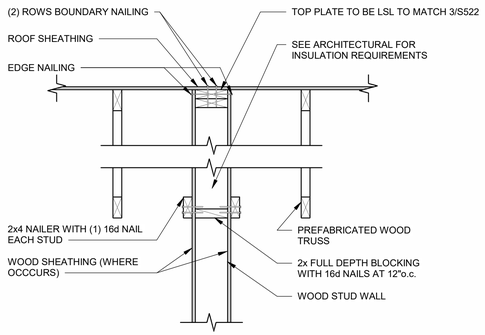

INTERIOR WALL TO ROOF CONNECTION

SCALE : NONE

2 / S522

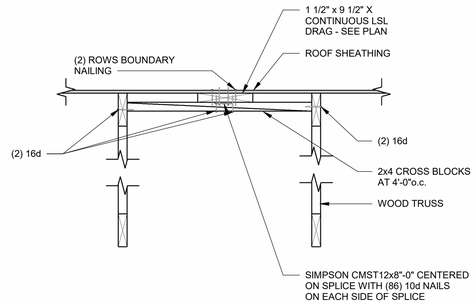

DRAG SUPPORT BETWEEN TRUSSES

SCALE : NONE

3 / S522

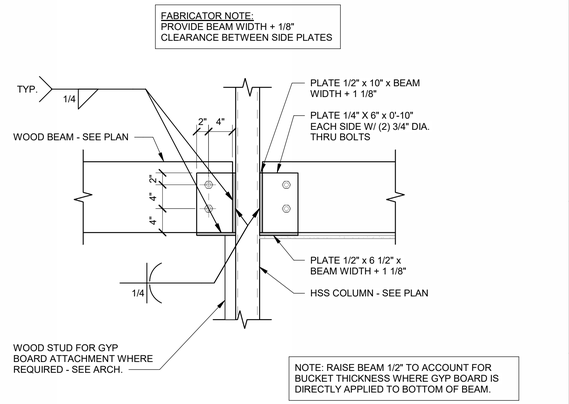

BEAMS INTO HSS COLUMN

SCALE : NONE

4 / S522

OUTLOOKER AT GRID C

SCALE : NONE

6 / S522

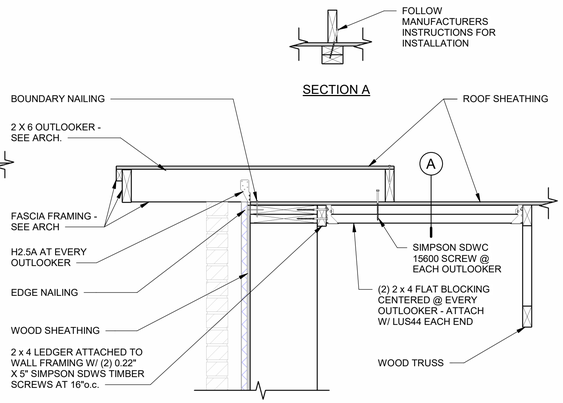

DETAIL

SCALE : NONE

7 / S522

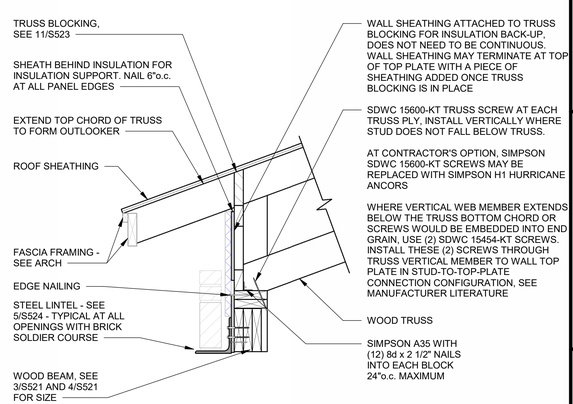

WOOD TRUSS BEARING AT EXTERIOR WALL

SCALE : NONE

8 / S522

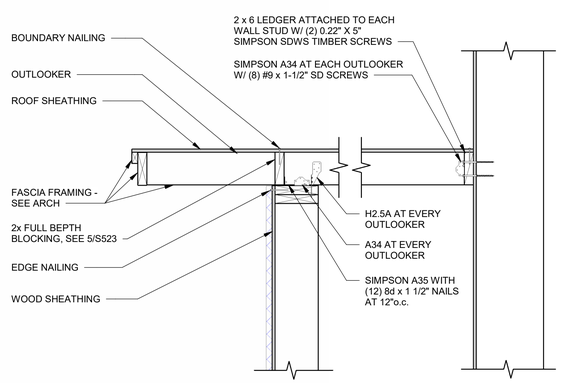

DETAIL

SCALE : NONE

9 / S522

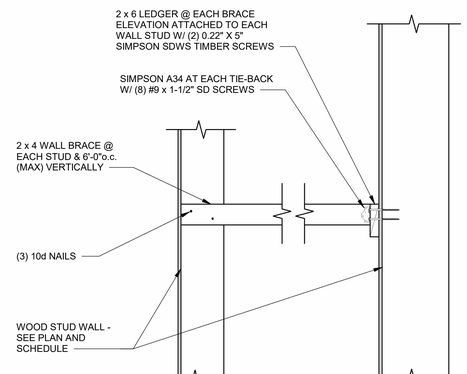

DETAIL

SCALE : NONE

10 / S522

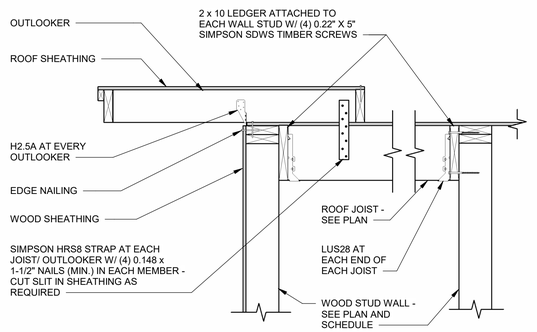

DETAIL

SCALE : NONE

11 / S522

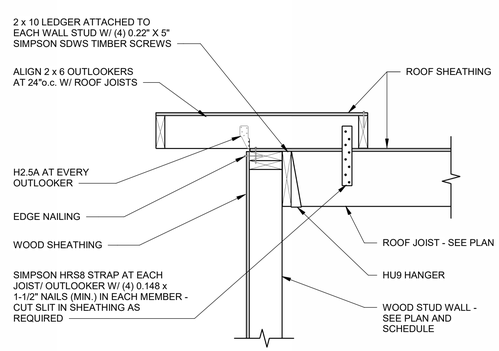

DETAIL

SCALE : NONE

12 / S522

bhd ARCHITECTS
www.bhdarchitects.com
Phone 801.571.0010
Fax 801.571.0303
Toll Free 888.571.0010
65 East Wadsworth Park Drive
Suite 205 Draper, Utah 84020

Matthew C. McBride No. 353893 5/29/25 STATE OF UTAH

ARW ENGINEERS
Provo, Utah Office
Boise, Idaho Office
www.arwengineers.com

THE CHURCH OF JESUS CHRIST OF LATTER-DAY SAINTS

Nibley 6 & Nibley UT West Stake

Approx. 3410 South 1200 West, Nibley, Utah
41.670809, -111.860775

Owner #: 514-4728
Plan Series: Heritage 24
County Parcel: 03050:0016
BHD #: 2403
Date: 29 May 2025

Drawing Issue and Revision Schedule

#	Date	Description
1	29 May 2025	Bid Documents

Roof Details

S522

C:\Users\jackson\Documents\S-25705 - Nibley 6 - Her 24 - 2025_jackson@BHB2.rvt
5/20/2025 3:10:04 PM

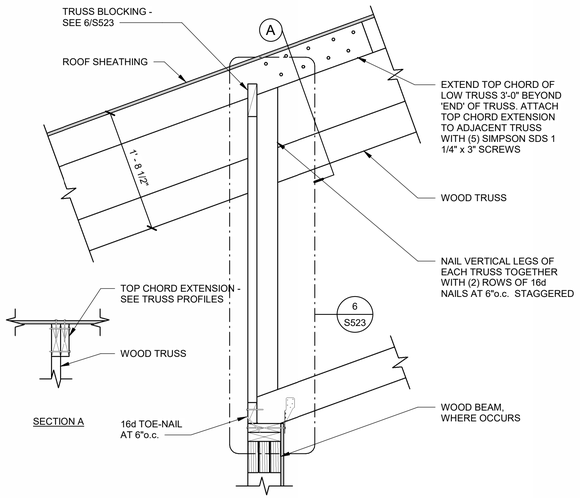

TRUSS BEARING AT INTERIOR WALL

SCALE : NONE

1 / S523

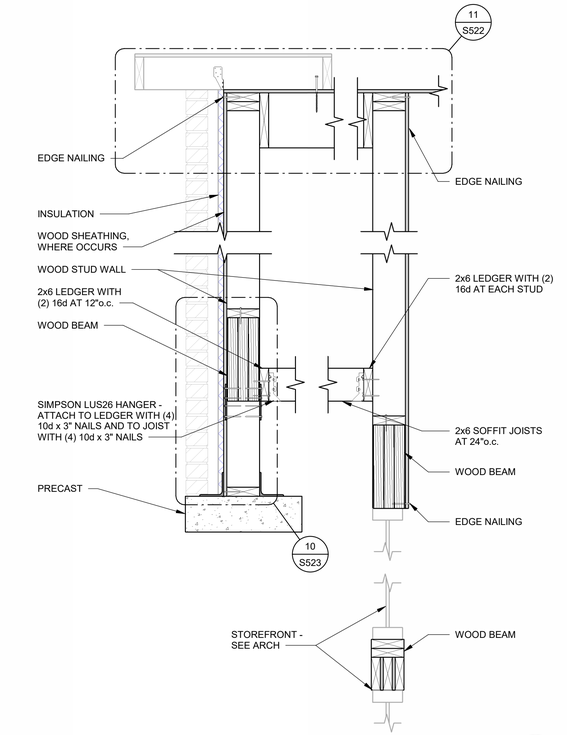

OUTLOOKER DETAIL AT ENTRY

SCALE : NONE

4 / S523

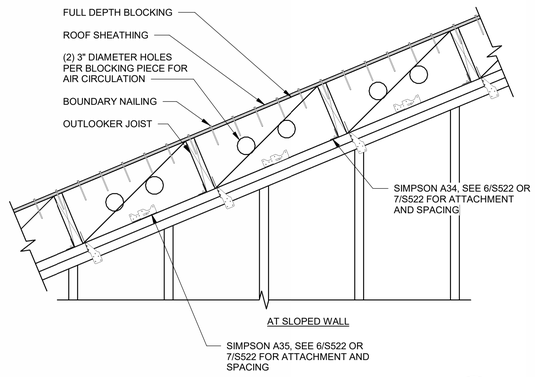

SOLID BLOCKING AND ANCHORING DETAIL

SCALE : NONE

5 / S523

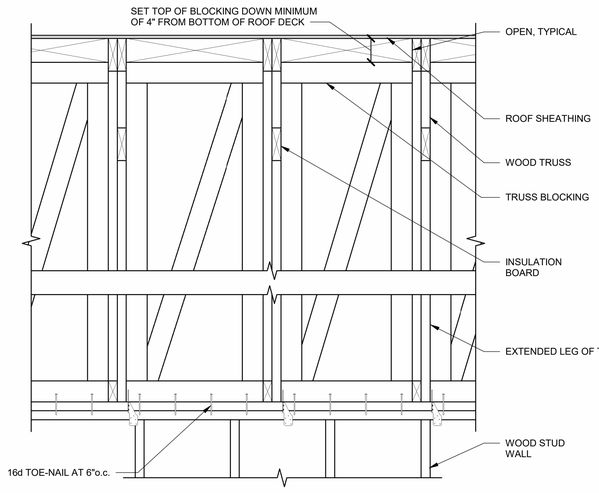

TRUSS BLOCKING AT INTERIOR BEARING

SCALE : NONE

6 / S523

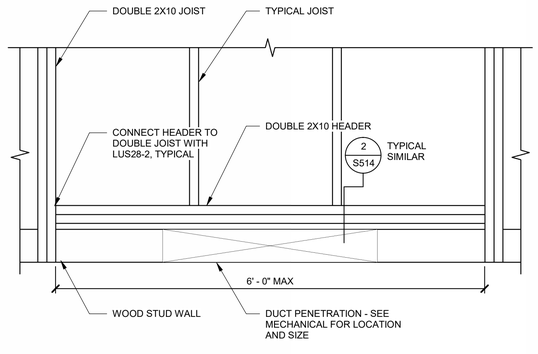

DUCT PENETRATION AT BEARING WALL

SCALE : NONE

9 / S523

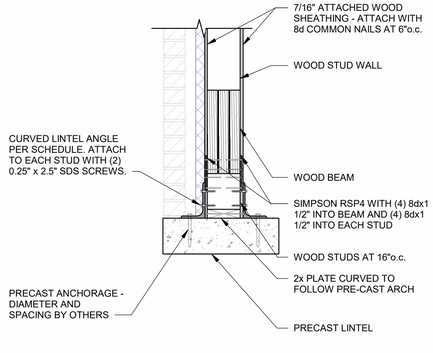

SUSPENDED ELEMENT AT OPENING

SCALE : NONE

10 / S523

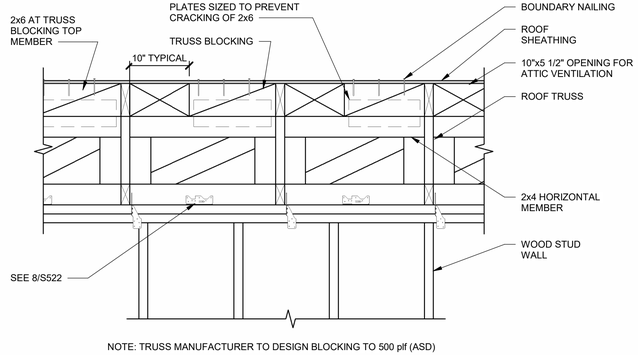

NOTE: TRUSS MANUFACTURER TO DESIGN BLOCKING TO 500 plf (ASD)

TRUSS BLOCKING AT LOW EXTERIOR WALL

SCALE : NONE

11 / S523

bhd ARCHITECTS
www.bhdarchitects.com
Phone 801.571.0010
Fax 801.571.0303
Toll Free 888.571.0010
65 East Wadsworth Park Drive
Suite 205 Draper, Utah 84020

Matthew C. McBride No. 353893 5/29/25 PROFESSIONAL ENGINEER STATE OF UTAH

ARW ENGINEERS
Troy W. Peck, P.E.
Kyle T. Peterson, P.E.
Kevin Nielsen, S.E.
Kyle Peterson, S.E.
Brandon Allen, S.E.
Kevin Nielsen, P.E.

THE CHURCH OF JESUS CHRIST OF LATTER-DAY SAINTS

Nibley 6 &
Nibley UT West Stake

Approx. 3410 South 1200 West, Nibley, Utah
41.670809, -111.860775

BHD #: 2403
County Parcel: 03:050:0016
Plan Series: Heritage 24
Owner #: 514-4728
Date: 29 May 2025

Drawing Issue and Revision Schedule

#	Date	Description
1	29 May 2025	Bid Documents

Roof Details

S523

C:\Users\jackson\Documents\S-25705 - Nibley 6 - Her 24 - 2025_jackson@BHD2.rvt

5/20/2025 3:10:05 PM

FABRICATOR NOTE:
PROVIDE TRUSS WIDTH +1/8"
CLEARANCE BETWEEN SIDE PLATES

TRUSS MANUFACTURER NOTE:
NOTE BOLT LOCATIONS AND COORDINATE WITH TRUSS PRESS PLATES.

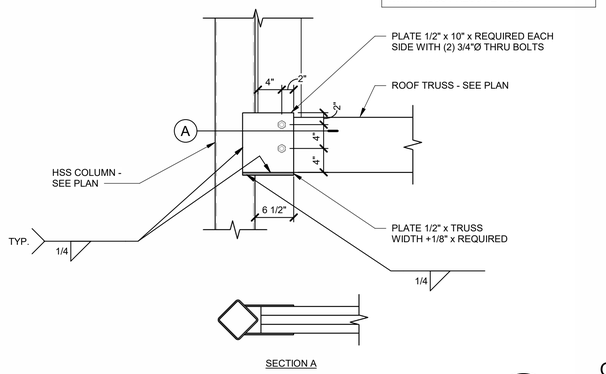

DETAIL
SCALE : NONE
1 S524

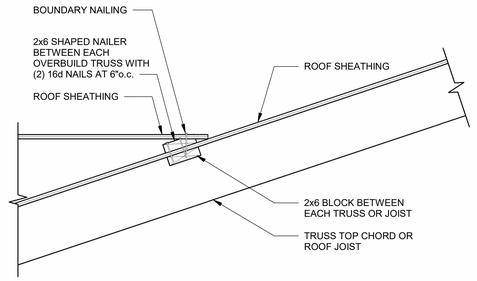

OVERBUILD FRAMING TO ROOF SHEATHING
SCALE : NONE
2 S524

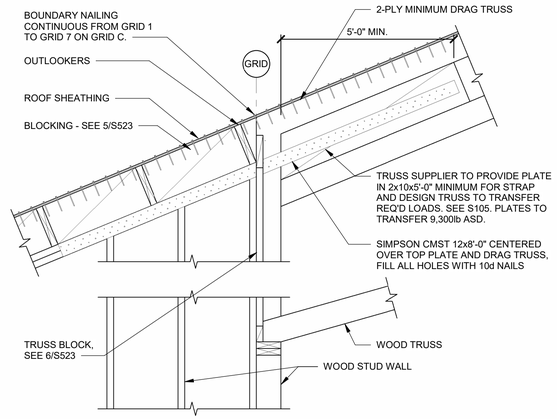

DRAG DETAIL ON GRID C
SCALE : NONE
3 S524

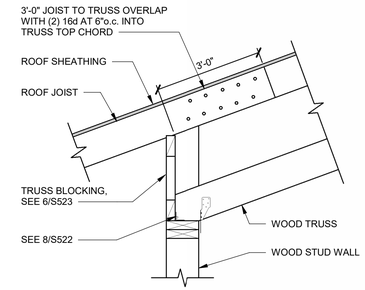

WOOD TRUSS BEARING AT GRID 6 AND GRID 2 AT ENTRIES
SCALE : NONE
4 S524

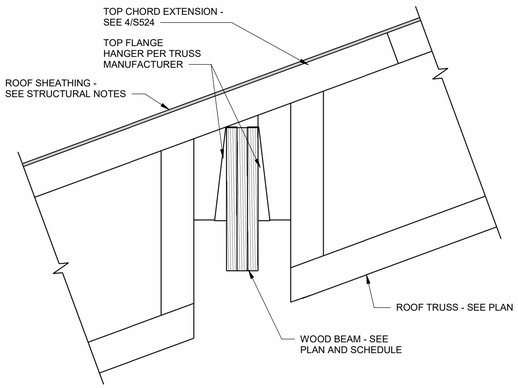

DETAIL
SCALE : NONE
7 S524

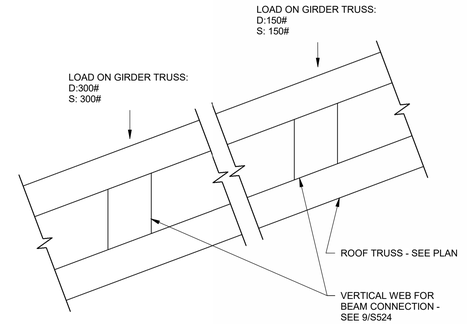

DETAIL
SCALE : NONE
8 S524

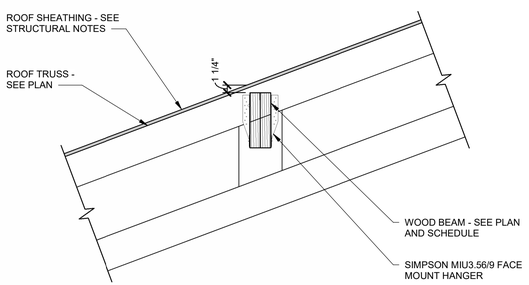

DETAIL
SCALE : NONE
9 S524

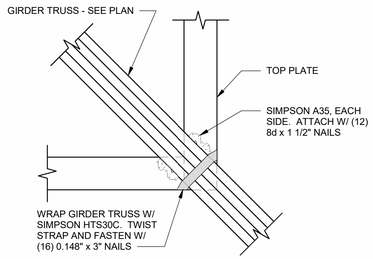

DETAIL
SCALE : NONE
10 S524

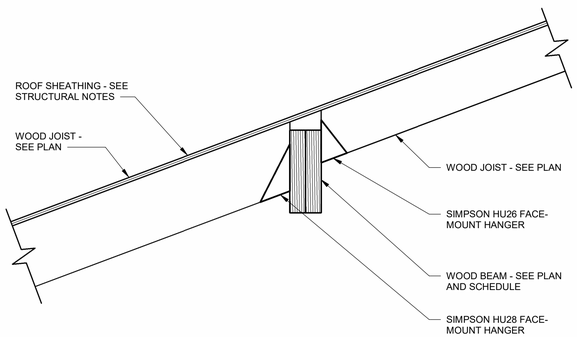

DETAIL
SCALE : NONE
11 S524

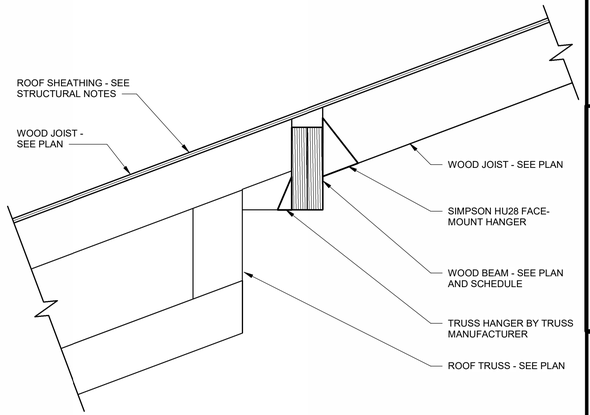

DETAIL
SCALE : NONE
12 S524

bhd ARCHITECTS
www.bhdarchitects.com
Phone 801.571.0010
Fax 801.571.0303
Toll Free 888.571.0010
65 East Wadsworth Park Drive
Suite 205 Draper, Utah 84020

Matthew C. McBride No. 353893 5/29/25

ARW ENGINEERS

THE CHURCH OF JESUS CHRIST OF LATTER-DAY SAINTS

Nibley 6 & Nibley UT West Stake

Approx. 3410 South 1200 West, Nibley, Utah
41.670809, -111.846775

BHD #: 2403
County Parcel: 03050:0016
Plan Series: Heritage 24
Owner #: 514-4728
Date: 29 May 2025

Drawing Issue and Revision Schedule

#	Date	Description
1	29 May 2025	Bid Documents

Roof Details

S524

C:\Users\jackson\Documents\S-25705 - Nibley 6 - Her 24 - 2025_jackson_QEMB2.rvt
5/20/2025 3:10:07 PM

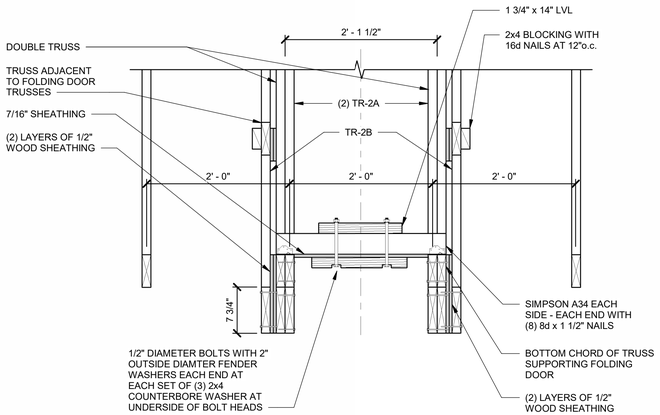

FOLDING PARTITION SECTION

SCALE : NONE

1 S525

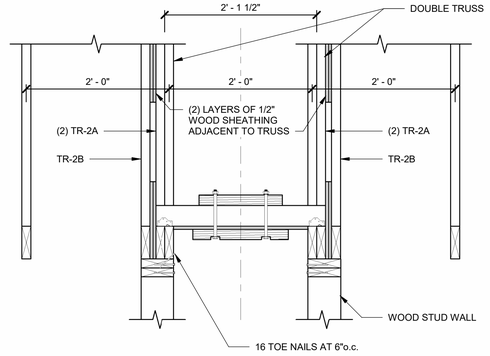

FOLDING PARTITION SECTION AT WALL

SCALE : NONE

2 S525

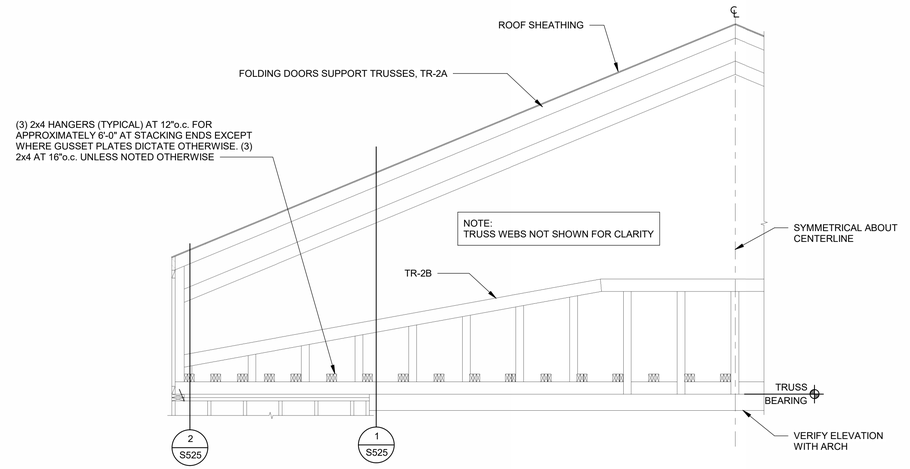

FOLDING PARTITION SECTION (BETWEEN CHAPEL AND CULTURAL HALL)

SCALE : NONE

3 S525

bhd ARCHITECTS
www.bhdarchitects.com
Phone 801.571.0010
Fax 801.571.0303
Toll Free 888.571.0010
65 East Wadsworth Park Drive
Suite 205 Draper, Utah 84020

PROFESSIONAL STRUCTURAL ENGINEER
Matthew C. McBride
No. 353893
5/29/25
STATE OF UTAH

ARW ENGINEERS
Provo, Utah Salt Lake City
Kanab, Utah Las Vegas
www.arwengineers.com

THE CHURCH OF JESUS CHRIST OF LATTER-DAY SAINTS

Nibley 6 &
Nibley UT West Stake

Approx. 3410 South 1200 West, Nibley, Utah
41.670809, -111.866775

Date: 29 May 2025
BHD #: 2403
County Parcel: 03050:0016
Plan Series: Heritage 24
Owner #: 514-4728

Drawing Issue and Revision Schedule

#	Date	Description
1	29 May 2025	Bid Documents

Roof Details

S525

5/20/2025 3:10:08 PM C:\Users\jacksonp\Documents\S-25705 - Nibley 6 - Her 24 - 2025_jacksonpQEMB2.rvt

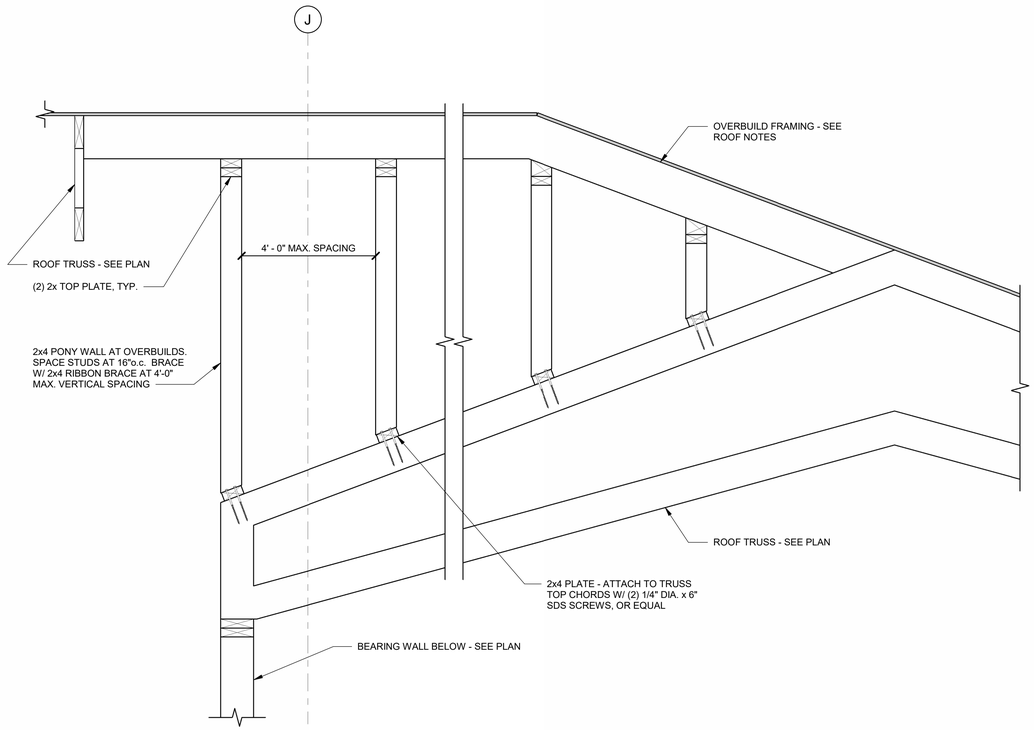

DETAIL
SCALE : NONE

1
S526

bhd ARCHITECTS
www.bhdarchitects.com
Phone 801.571.0010
Fax 801.571.0303
Toll Free 888.571.0010
65 East Wadsworth Park Drive
Suite 205 Draper, Utah 84020

PROFESSIONAL STRUCTURAL ENGINEER
Matthew C. McBride
No. 353893
5/29/25
STATE OF UTAH

ARW ENGINEERS
Draper, Utah 84020
www.arwengineers.com

THE CHURCH OF JESUS CHRIST OF LATTER-DAY SAINTS

Nibley 6 &
Nibley UT West Stake

Approx. 3410 South 1200 West, Nibley, Utah
41.670809, -111.866775

Date: 29 May 2025
BHD #: 2403
County Parcel: 03050:0016
Plan Series: Heritage 24
Owner #: 514-4728

Drawing Issue and Revision Schedule

#	Date	Description
1	29 May 2025	Bid Documents

Roof Details

S526

5/20/2025 3:10:09 PM
C:\Users\jacksonp\Documents\S-25705 - Nibley 6 - Her 24 - 2025_jacksonpQEM82.rvt

SCHEDULE A

DESIGN CRITERIA

DESIGN CRITERIA	2018 INTERNATIONAL BUILDING CODE (ASCE 7)	2021 IBC
SEISMIC	RISK CATEGORY	III
	IBC SEISMIC IMPORTANCE FACTOR	I_E = 1.25
	MAPPED SPECTRAL RESPONSE ACCELERATION:	
	MAPPED VALUE OF S_S (FOR ALL CALCULATIONS EXCEPT C_S)	S_S = 1.082
	VALUE OF S_S USED TO CALCULATE C_S (LIMIT S_S TO 1.5 PER ASCE7)	S_S = 1.082
	S_1	S_1 = 0.364
	SOIL SITE CLASS	D
	SITE COEFFICIENT, F_a	F_a = 1.2
	SITE COEFFICIENT, F_v	F_v = 1.936
	DESIGN SPECTRAL RESPONSE ACCELERATION PARAMETERS	S_{DS} = 0.866 S_{D1} = 0.470
	SEISMIC DESIGN CATEGORY	D
	BASIC SEISMIC-FORCE RESISTING SYSTEM.	LIGHT FRAMED WALLS SHEATHED WITH WOOD PANELS
	RESPONSE MODIFICATION FACTOR	R = 6.5
	OVERSTRENGTH FACTOR	Ω_0 = 2.5
	ANALYSIS PROCEDURE USED.	ASCE 7 EQUIVALENT LATERAL FORCE PROCEDURE
	SEISMIC RESPONSE COEFFICIENT - ULTIMATE	C_S = 0.166
WIND	ASCE 7 DIRECTIONAL PROCEDURE, PART 1	
	WIND SPEED (3 SECOND GUST)	110 M.P.H.
	INTERNAL PRESSURE COEFFICIENT	±0.18
	EXPOSURE CATEGORY	C
ROOF	DEAD LOAD	20 P.S.F.
	SNOW IMPORTANCE FACTOR	I_S = 1.10
	GROUND SNOW LOAD, P_g	43 P.S.F.
	FLAT ROOF SNOW LOAD, P_f	33.1 P.S.F.
	SNOW EXPOSURE FACTOR, C_e	1.0
	THERMAL FACTOR, C_t	1.0
	SLOPE FACTOR, C_s	1.0
	ROOF SNOW LOAD - THIS LOAD REFLECTS ROOF SNOW LOAD MULTIPLIED BY THE SNOW IMPORTANCE FACTOR (VALUE SHOWN DOES NOT INCLUDE DRIFT LOAD)	33.1 P.S.F.
	BUILDING ELEVATION	4517 ft.
	ROOF RAIN LOAD	1.76 in/hr
EQUIPMENT PLATFORM	DEAD LOAD	15 P.S.F.
	LIVE LOAD	40 P.S.F.
ROSTRUM	DEAD LOAD	15 P.S.F.
	LIVE LOAD	100 P.S.F.
PLATFORM	DEAD LOAD	15 P.S.F.
	LIVE LOAD	125 P.S.F.
SOIL BEARING	NET BEARING CAPACITY	2500 P.S.F.
	SOIL SUBGRADE MODULUS, K	100 psi
WIND (STEEPLE)	ASCE 7 SECTION 29.4 - OTHER STRUCTURES	
	WIND SPEED	110 M.P.H.
	FORCE COEFFICIENT, Cf	1.36

SCHEDULE B

LEGEND

BOB	BOTTOM OF BEAM
BM-x	INDICATES WOOD BEAM. SEE SCHEDULE
CW-x	INDICATES CONCRETE WALL, SEE SCHEDULE
EOS	EDGE OF SLAB
FC-x	INDICATES CONCRETE CONTINUOUS FOOTING TYPE, SEE SCHEDULE
FS-x	INDICATES CONCRETE SPOT FOOTING TYPE, SEE SCHEDULE
SCL	INDICATES STRUCTURAL COMPOSITE LUMBER SUCH AS LVL, LSL, AND PSL
TOF	TOP OF FOOTING
TOS	TOP OF SLAB
TOW	TOP OF WALL
TR-X	INDICATES WOOD TRUSS, SEE ELEVATIONS ON S20X
Wx-x	INDICATES WOOD WALL. SEE SCHEDULE

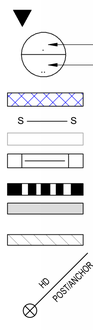

INDICATES SIDE WHERE INTERIOR WOOD WALL SHEATHING IS TO BE INSTALLED

DETAIL NUMBER

DETAIL SHEET

INDICATES DEPRESSED SLAB, SEE ARCHITECTURAL PLANS

INDICATES FOOTING STEP

INDICATES NON-STRUCTURAL WOOD STUD WALL

INDICATES WOOD BEAM OR HEADER

INDICATES STRUCTURAL WOOD SHEAR WALL

TYPE 1 BLOCKED DIAPHRAGM, SEE SCHEDULE ON S604

TYPE 2 BLOCKED DIAPHRAGM, SEE SCHEDULE ON S604

HD - SIMPSON HOLD DOWN SIZE
POST - SIZE OF END POST CONNECTED TO HOLD DOWN
ANCHOR - SIMPSON ANCHOR HOLD DOWN SIZE AND CONFIGURATION

DEPRESS FOUNDATION WALL AND POUR FLOOR SLAB OVER AT CONCRETE FOUNDATION WALL

SCHEDULE C

SPECIAL INSPECTION SCHEDULE [1, 2]

ESTABLISHED PER 2021 IBC SECTION 110 AND CHAPTER 17

ITEM	CONTINUOUS[3]	PERIODIC[3]	REFERENCE	COMMENTS
CONCRETE CONSTRUCTION (IBC 1705.3)			SEE IBC TABLE 1705.3 - REF. NOTE C1	C1. SPECIAL INSPECTION IS NOT REQUIRED FOR CONCRETE ISOLATED SPREAD FOOTINGS, CONTINUOUS FOOTINGS, NON-STRUCTURAL SLABS, FOUNDATION WALLS, PATIOS, DRIVEWAYS, AND SIDEWALKS BECAUSE THE REQUIREMENTS OF IBC 1705.3 ARE MET. C2. PERFORM AIR, SLUMP AND TEMPERATURE TESTS WHEN CONCRETE SAMPLES ARE CAST. C3. EPOXY AND EXPANSION ANCHORS INTO CONCRETE MAY BE USED ONLY WHEN APPROVED BY ARCHITECT. AND/OR ENGINEER USING AN APPROVED PRODUCT WITH CURRENT PUBLISHED ICC RESEARCH REPORT NUMBERS. COORDINATE CONTINUOUS/PERIODIC SPECIAL INSPECTION REQUIREMENTS WITH ICC REPORT. C4. REFER TO DIVISION 03 OF THE SPECIFICATION FOR ADDITIONAL AND SPECIFIC TESTING AND INSPECTION REQUIREMENTS.
REINFORCING STEEL PLACEMENT		●		
EMBEDDED BOLTS AND PLATES	●			
VERIFYING REQUIRED DESIGN MIX		●		
CONCRETE PLACEMENT / SAMPLING	●		REFERENCE NOTE C2	
CURING TEMPERATURE / TECHNIQUES		●		
EPOXY / EXPANSION ANCHOR PLACEMENT	●	●	REFERENCE NOTE C3	
MASONRY CONSTRUCTION (IBC 1705.4)			SEE TMS 402/ACI 550 TABLE 1.19.2 (NON-ESSENTIAL)	M1. INSPECTION NOT REQUIRED FOR MECHANICAL SCREEN WALLS. M2. REFER TO DIVISION 04 FOR ADDTIONAL AND SPECIFIC INSPECTION AND TESTING REQUIREMENTS.
WOOD (IBC 1705.5, 1705.11.1, & 1705.12.1)				W.1. SPECIAL INSPECTION IS NOT REQUIRED FOR WOOD SHEAR WALLS, WOOD DIAPHRAGMS, INCLUDING NAILING, AND BOLTING, AND OTHER FASTENING TO OTHER COMPONENTS WHERE THE SPACING OF THE SHEATHING FASTENERS IS GREATER THAN 4"o.c. WHERE NAIL SPACING IS 4"o.c. OR CLOSER, VERIFY THE NOMINAL SIZE OF FRAMING MEMBERS AT ADJOINING PANEL EDGES, THE NAIL OR STAPLE DIAMETER AND LENGTH, NUMBER OF FASTENER LINES, AND SPACING BETWEEN FASTENERS IN EACH LINE AND AT EDGE MARGINS. ADDITIONALLY, VERIFY SILL PLATE AND ANCHOR BOLTS DIAMETER, SPACING, PLATE WASHER SIZE AND LOCATION. SIMILAR INFORMATION IS TO BE GATHERED FOR OTHER FASTENING COMPONENTS.
SHEAR WALL AND DIAPHRAGM NAILING		●	REFERENCE NOTE W1	
DRAG STRUTS		●		
HOLDOWNS		●		
SOILS (IBC 1705.6)			REFERENCE NOTE F1	F1. SPECIAL INSPECTION OF SOILS SHALL REFERENCE THE APPROVED SOILS REPORT TO DETERMINE COMPLIANCE. F2. WHERE SOILS REPORT IS NOT PROVIDED SPECIAL INSPECTIONS ARE REQUIRED TO VERIFY THAT THE IN-PLACE DRY DENSITY OF THE COMPACTED FILL IS NOT LESS THAN 90 PERCENT OF THE MAXIMUM DRY DENSITY AT OPTIMUM MOISTURE CONTENT DETERMINED IN ACCORDANCE WITH ASTM D 1557. F3. REFER TO DIVISION 31 OF SPECIFICATIONS FOR ADDITIONAL AND SPECIFIC TESTING AND INSPECTION REQUIREMENTS. REFER TO DIVISION 6 OF THE SPECIFICATIONS FOR ADDITIONAL AND SPECIFIC TESTING AND INSPECTION REQUIREMENTS.
VERIFY ADEQUATE MATERIALS BELOW FOOTINGS		●	REFERENCE NOTE F1	
EXCAVATIONS EXTEND TO PROPER DEPTH AND REACH PROPER MATERIAL		●	REFERENCE NOTE F2	
CLASSIFY AND TEST CONTROLLED FILL MATERIALS		●	REFERENCE NOTE F2	
PERFORM MATERIALS, DENSITIES, AND LIFT THICKNESSES DURING PLACEMENT AND COMPACTION OF CONTROLLED FILL.	●		REFERENCE NOTE F1	
PROPERLY PREPARED SITE AND SUB-GRADE PRIOR TO FILL.		●	REFERENCE NOTE F1	
FABRICATORS (IBC 1704.2.5)				
	●			IF FABRICATOR IS APPROVED, ON-SITE INSPECTION IS NOT REQUIRED BUT A CERTIFICATE OF COMPLETION MUST BE PROVIDED TO THE BUILDING OFFICIAL (IBC 1704.2.5)
PREFABRICATED METAL PLATE WOOD TRUSSES:				
THE INSPECTOR SHALL VERIFY THAT THE FABRICATOR MAINTAINS DETAILED FABRICATION AND QUALITY CONTROL PROCEDURES THAT PROVIDE A BASIS OF INSPECTION CONTROL OF THE WORKMANSHIP AND THE FABRICATOR'S ABILITY TO CONFORM TO APPROVED CONSTRUCTION DOCUMENTS AND REFERENCED STANDARDS.		●		
REFER TO SPECIFICATIONS FOR INSPECTION OF PREFABRICATED WOOD TRUSSES LONGER THAN 60'-0" LONG		●		

GENERAL SPECIAL INSPECTION NOTES :

1. THE ITEMS MARKED WITH A "●" IN THE SPECIAL INSPECTION SCHEDULE SHALL BE INSPECTED IN ACCORDANCE WITH IBC CHAPTER 17 BY A CERTIFIED SPECIAL INSPECTOR FROM AN ESTABLISHED TESTING AGENCY. FOR MATERIAL SAMPLING AND TESTING REQUIREMENTS, REFER TO THE MATERIAL SAMPLING AND TESTING SECTION, AND THE PROJECT SPECIFICATIONS. THE TESTING AGENCY SHALL SEND COPIES OF ALL STRUCTURAL TESTING AND INSPECTION REPORTS DIRECTLY TO THE ARCHITECT, ENGINEER, CONTRACTOR, AND BUILDING OFFICIAL. ANY ITEMS WHICH FAIL TO COMPLY WITH THE APPROVED CONSTRUCTION DOCUMENTS SHALL IMMEDIATELY BE BROUGHT TO THE ATTENTION OF THE CONTRACTOR FOR CORRECTION. IF DISCREPANCIES ARE NOT CORRECTED, THEY SHALL BE BROUGHT TO THE ATTENTION OF THE BUILDING OFFICIAL, ARCHITECT, AND ENGINEER PRIOR TO COMPLETION OF THAT PHASE OF WORK. SPECIAL INSPECTION TESTING REQUIREMENTS APPLY EQUALLY TO ALL BIDDER DESIGNED COMPONENTS.
2. ANY CONSTRUCTION OR MATERIAL THAT HAS FAILED INSPECTION SHALL BE SUBJECT TO REMOVAL AND REPLACEMENT.
3. CONTINUOUS SPECIAL INSPECTION MEANS THE FULL-TIME OBSERVATION OF WORK REQUIRING SPECIAL INSPECTION BY AN APPROVED SPECIAL INSPECTOR WHO IS PRESENT IN THE AREA WHERE THE WORK IS BEING PERFORMED. PERIODIC SPECIAL INSPECTION MEANS THE PART-TIME OR INTERMITTENT OBSERVATION OF WORK REQUIRING SPECIAL INSPECTION BY AN APPROVED SPECIAL INSPECTOR WHO IS PRESENT IN THE AREA WHERE THE WORK HAS BEEN OR IS BEING PERFORMED AND AT THE COMPLETION OF THE WORK. (IBC SECTION 202)

STATEMENT OF SPECIAL INSPECTION

1. SPECIAL INSPECTIONS AND STRUCTURAL TESTING SHALL BE PROVIDED BY AN INDEPENDENT AGENCY EMPLOYED BY THE OWNER FOR THE ITEMS IDENTIFIED IN THIS SECTION AND IN OTHER AREAS OF THE APPROVED CONSTRUCTION PLANS AND SPECIFICATIONS, UNLESS WAIVED BY THE BUILDING OFFICIAL (SEE IBC CHAPTER 17).
2. THE NAMES AND CREDENTIALS OF THE SPECIAL INSPECTORS TO BE USED SHALL BE SUBMITTED TO THE BUILDING OFFICIAL FOR APPROVAL.
3. DUTIES OF THE SPECIAL INSPECTOR:
   a. THE SPECIAL INSPECTOR SHALL REVIEW ALL WORK LISTED ABOVE FOR CONFORMANCE WITH THE APPROVED CONSTRUCTION PLANS AND SPECIFICATIONS AND THE IBC.
   b. THE SPECIAL INSPECTOR SHALL FURNISH SPECIAL INSPECTION REPORTS TO THE ENGINEER OF RECORD, CONTRACTOR, OWNER AND BUILDING OFFICIAL ON A WEEKLY BASIS, OR MORE FREQUENTLY AS REQUIRED BY THE BUILDING OFFICIAL. ALL ITEMS NOT IN COMPLIANCE SHALL BE BROUGHT TO THE IMMEDIATE ATTENTION OF THE CONTRACTOR FOR CORRECTION, AND IF UNCORRECTED, TO THE ENGINEER OF RECORD AND THE BUILDING OFFICIAL.
   c. ONCE CORRECTIONS HAVE BEEN MADE BY THE CONTRACTOR, THE SPECIAL INSPECTOR SHALL SUBMIT A FINAL SIGNED REPORT TO THE BUILDING OFFICIAL STATING THAT THE WORK REQUIRING SPECIAL INSPECTION WAS, TO THE BEST OF THE SPECIAL INSPECTOR'S KNOWLEDGE, IN CONFORMANCE WITH THE APPROVED CONSTRUCTION PLANS AND SPECIFICATIONS AS WELL AS THE APPLICABLE WORKMANSHIP PROVISIONS OF THE IBC.
4. DUTIES AND RESPONSIBLITIES OF THE CONTRACTOR:
   a. THE CONTRACTOR SHALL SUBMIT A WRITTEN STATEMENT OF RESPONSIBLITY TO THE OWNER AND THE BUILDING OFFICIAL PRIOR TO THE COMMENCEMENT OF WORK. IN ACCORDANCE WITH IBC 1704.4, THE STATEMENT OF RESPONSIBILITY SHALL CONTAIN ACKNOWLEDGEMENT OF THE SPECIAL INSPECTION REQUIREMENTS CONTAINED WITHIN THE "STATEMENT OF SPECIAL INSPECTIONS".
   b. THE CONTRACTOR SHALL NOTIFY THE RESPONSIBLE SPECIAL INSPECTOR THAT WORK IS READY FOR INSPECTION AT LEAST ONE WORKING DAY (24 HOURS MINIMUM) BEFORE SUCH INSPECTION IS REQUIRED.
   c. ALL WORK REQUIRENG SPECIAL INSPECTION SHALL REMAIN ACCESSIBLE AND EXPOSED UNITL IT HAS BEEN OBSERVED BY THE SPECIAL INSPECTOR.
5. PLEASE SEE THE "SPECIAL INSPECTION SCHEDULE" FOR THE TYPES, EXTENTS AND FREQUENCY OF SPECIFIC ITEMS REQUIRING SPECIAL INSPECTIONS AND STRUCTURAL TESTS AS PART OF THIS PROJECT.

bhd ARCHITECTS
www.bhdarchitects.com
Phone 801.571.0010
Fax 801.571.0303
Toll Free 888.571.0010
65 East Wadsworth Park Drive
Suite 205 Draper, Utah 84020

Matthew C. McBride No. 353893 STATE OF UTAH 5/29/25

ARW ENGINEERS

THE CHURCH OF JESUS CHRIST OF LATTER-DAY SAINTS

Nibley 6 & Nibley UT West Stake

Approx. 3410 South 1200 West, Nibley, Utah
41.672809, -111.840775

BHD #: 2403
County Parcel: 03:050:0016
Plan Series: Heritage 24
Owner #: 514-4728
Date: 29 May 2025

Drawing Issue and Revision Schedule

#	Date	Description
1	29 May 2025	Bid Documents

Schedules

S601

C:\Users\jackson\Documents\S-25705 - Nibley 6 - Her 24 - 2025_jackson@BMB2.rvt
5/20/2025 3:10:10 PM

SCHEDULE A

CONCRETE FOUNDATION WALL SCHEDULE

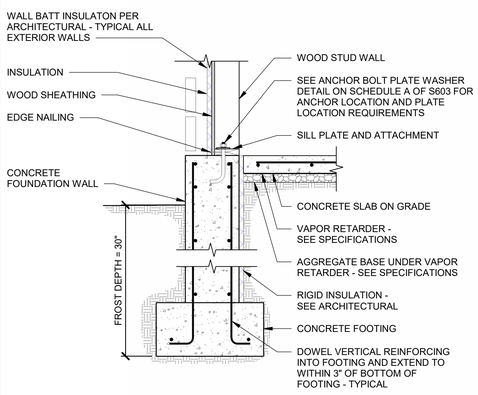

MARK	WIDTH	HORIZONTAL REINF.			VERTICAL REINF.	
		TOP	INTERMEDIATE	BOTTOM	SIZE	SPACING
CW-8	8"	(2) #4	#4 AT 16"o.c.	(2) #4	#4	16"o.c.
CW-10	10"	(2) #4	(2) #4 AT 18"o.c.	(2) #4	#4	16"o.c. EF
CW-12	12"	(2) #4	(2) #4 AT 18"o.c.	(2) #4	#4	16"o.c. EF
CW-14	14"	(2) #4	(2) #4 AT 16"o.c.	(2) #4	#4	16"o.c. EF
CW-16	16"	(2) #4	(2) #4 AT 12"o.c.	(2) #4	#4	12"o.c. EF

NOTE:
IF FOOTINGS ARE EARTH-FORMED, FOOTING WIDTH AND LENGTH SHALL BE 6" LONGER AND WIDER THAN SCHEDULED. SEE FIGURE ABOVE.

SCHEDULE B

CONCRETE FOOTING SCHEDULE

MARK*	WIDTH	LENGTH	DEPTH	REINFORCING CROSSWISE				REINFORCING LENGTHWISE				REMARKS
				NO.	SIZE	LENGTH	SPACING	NO.	SIZE	LENGTH	SPACING	
FC1.5	1'-6"	CONT.	1'-0"	-	-	-	-	2	#4	CONT.	12"o.c.	
FC2.0	2'-0"	CONT.	1'-0"	-	-	-	-	3	#4	CONT.	EQUAL	
FC3.0	3'-0"	CONT.	1'-0"	(1)	#5	2'-6"	12"o.c.	3	#5	CONT.	EQUAL	
FC4.0	4'-0"	CONT.	1'-0"	-	-	-	-	4	#5	CONT.	EQUAL	
FS2.5	2'-6"	2'-6"	1'-0"	3	#5	2'-0"	EQUAL	3	#5	2'-0"	EQUAL	
FS3.0	3'-0"	3'-0"	2'-6"	3	#5	2'-6"	EQUAL	3	#5	2'-6"	EQUAL	REINFORCE TOP AND BOTTOM
FS4.0	4'-0"	4'-0"	1'-0"	5	#5	3'-6"	EQUAL	5	#5	3'-6"	EQUAL	
FS5.0	5'-0"	5'-0"	1'-2"	6	#5	4'-6"	EQUAL	6	#5	4'-6"	EQUAL	

NOTES:
1. PLACE REINFORCING IN THE BOTTOM OF THE FOOTING WITH 3" CLEAR CONCRETE COVER (UNLESS NOTED OTHERWISE). USE ADOBE BLOCKS.
2. TOP REINFORCING, WHERE SPECIFIED, SHALL BE PLACED IN THE TOP OF THE FOOTING WITH 2" MINIMUM CONCRETE COVER.
3. IF FOOTINGS ARE EARTH-FORMED, FOOTING WIDTH AND LENGTH SHALL BE 6" LONGER AND WIDER THAN SCHEDULED. SEE FIGURE BELOW.
4. RUN CONTINUOUS BARS IN CONTINUOUS FOOTINGS THRU INTERSECTED SPOT FOOTINGS. SEE FIGURE BELOW.

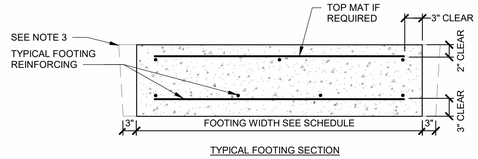

TYPICAL FOOTING SECTION

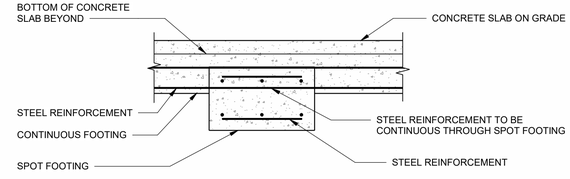

CONTINUOUS BARS THROUGH INTERSECTED SPOT FOOTINGS

SCHEDULE C

SCHEDULE OF CONSTRUCTION MATERIALS

CONCRETE

LOCATION	28 - DAY COMPRESSIVE STRENGTH
EXTERIOR CONCRETE	4,500 P.S.I. MIX TYPE E
FOOTINGS	3,000 P.S.I. MIX TYPE A
FOUNDATION WALLS (EXTERIOR)	4,500 P.S.I. MIX TYPE E
FOUNDATION WALLS (INTERIOR)	4,000 P.S.I. MIX TYPE D
INTERIOR SLABS ON GRADE	3,500 P.S.I. MIX TYPE B

NOTES: 1. CONCRETE STRENGTH USED IN DESIGN IS 2500 P.S.I. 2. SEE SPECIFICATIONS 03-3000 FOR DEFINITION OF MIX TYPE.

REINFORCING STEEL

FIELD BENT BARS	ALL OTHER BARS
ASTM A615, GRADE 40 OR GRADE 60 (SEE LAP SPLICE SCHEDULE D/S602 FOR LAP LENGTHS)	ASTM A615, GRADE 60 (SEE LAP SPLICE SCHEDULE D/S602 FOR LAP LENGTHS)S

STRUCTURAL STEEL

APPLICATION	MATERIAL
SQUARE OR RECTANGULAR HSS	ASTM A500 (46ksi) GRADE B
OTHER SHAPES AND PLATES	ASTM A36 (36ksi)

NOTES: WELDING OF STRUCTURAL STEEL SHALL BE IN ACCORDANCE WITH AWS D1.1

WOOD

DIMENSION LUMBER (ANY SPECIES AND GRADE LISTED MAY BE USED FOR ANY OF THE DESCRIBED APPLICATIONS).

APPLICATION	SPECIES GROUP AND MINIMUM GRADE		
TOP PLATES, STRUTS, ROOF JOISTS, FLOOR JOISTS, MISC. FRAMING, HEADERS, BEAMS, LEDGERS	DOUGLAS FIR-LARCH HEM FIR SOUTHERN PINE MSR	#2 OR BETTER #1 OR BETTER #2 OR BETTER 1650F - 1.5E OR BETTER	
BLOCKING	DOUGLAS FIR-LARCH HEM FIR SOUTHERN PINE MSR	#2 OR BETTER #2 OR BETTER #2 OR BETTER 1650F - 1.5E OR BETTER	
POSTS AND TIMBERS 5" x 5" AND LARGER	DOUGLAS FIR-LARCH SOUTHERN PINE	#1 OR BETTER #1 OR BETTER	
SILL PLATES	DOUGLAS FIR-LARCH HEM FIR SOUTHERN PINE SCL	2x4, 1 1/2"x3 1/2" SCL STANDARD OR BETTER STANDARD OR BETTER STANDARD OR BETTER 1.3E	2x6, 2x8, 2x10, 1 1/2"x9 1/2" SCL, 1 1/2"x11 7/8" SCL #2 OR BETTER #2 OR BETTER #2 OR BETTER 1.5E
TRUSSED RAFTERS (CHORDS AND WEBS)	SPRUCE PINE FIR DOUGLAS FIR-LARCH HEM FIR SOUTHERN PINE MSR	#2 OR BETTER #2 OR BETTER #1 OR BETTER #2 OR BETTER 165F - 1.5E OR BETTER	
EXTERIOR WALL STUDS AND INTERIOR STRUCTURAL WALL STUDS	DOUGLAS FIR-LARCH HEM FIR SOUTHERN PINE SCL	2x4 #2 OR BETTER #1 OR BETTER #2 OR BETTER	2x6 #2 OR BETTER #1 OR BETTER #2 OR BETTER
INTERIOR NON-STRUCTURAL WALL STUDS	DOUGLAS FIR-LARCH HEM FIR SOUTHERN PINE	2x4 STANDARD, UTILITY, CONSTRUCTION, OR BETTER STANDARD, UTILITY, CONSTRUCTION, OR BETTER STANDARD, UTILITY, CONSTRUCTION, OR BETTER	2x6 #2 OR BETTER #2 OR BETTER #2 OR BETTER

STRUCTURAL COMPOSITE LUMBER (SCL) SUCH AS LVL AND LSL

	MINIMUM PROPERTY VALUES[1] - P.S.I.				
	Fb	Fv	Fc⊥	Fc||	E x 10^6
1-1/2" x = 5-1/2" (SEE NOTE 4 AND 5)	1,700	220	575	1,400	1.3
1-1/2" x ALL OTHER DEPTHS (SEE NOTE 4 AND 5)	2,250	220	575	1,950	1.5
1-3/4" x ALL DEPTHS	2,600	285	750	2,350	1.9
3-1/2" x ALL DEPTHS	1,700	285	680	1,400	1.3

GLU-LAM COLUMNS

	MINIMUM PROPERTY VALUES[1] - P.S.I.				
	Fb	Fv	Fc⊥	Fc||	E x 10^6
5 1/8" x ALL DEPTHS	2,400	265	650	1,800	2.0

GLUED LAMINATED BEAMS

	MINIMUM PROPERTY VALUES[1] - P.S.I.				
	Fb TENSION ZONE	Fb COMPRESSION ZONE STRESSED IN TENSION	Fv	Fc	E x 10^6
24F-V4 DF/DF OR 24F-E4 SP/SP WITH STRESS CLASS 24F-1.8E	2400	2400	265	1600	1.8

NOTES:
1. DESIGN VALUES ARE FOR NORMAL DURATION. REPETITIVE FRAMING FACTORS AND SIZE FACTORS HAVE NOT BEEN APPLIED.
2. 1 3/4" MEMBERS MAY BE USED TO REPLACE 1 1/2" SCL MEMBERS. ADJUST DIMENSIONS IN PLANS AND DETAILS ACCORDINGLY.
3. LIMIT THE MODULUS OF ELASTICITY OF 1 1/2" LSL MEMBERS TO 1.55x10^6 psi.
4. LSL WOOD IS HARDER AND DENSER THAN LVL WOOD. FRAMER MUST HAVE EQUIPMENT THAT WILL DRIVE NAILS COMPLETELY INTO WOOD.

SCHEDULE D

REINFORCING BAR OVERLAP SCHEDULE FOR BARS IN CONCRETE

BAR SIZE	BAR OVERLAP	BAR SIZE	BAR OVERLAP	BAR SIZE	BAR OVERLAP
#3	18"	#4	24"	#5	30"
#6	36"	#7	42"	#8	48"

SCHEDULE E

CONCRETE PROTECTION FOR REINFORCEMENT

CONCRETE PLACED AGAINST AND PERMANENTLY EXPOSED TO EARTH	ALL APPLICATIONS EXCEPT SLABS ON GRADE	3"
	SLABS ON GRADE - CLEAR DISTANCE FROM TOP OF SLAB	1"
CONCRETE EXPOSED TO EARTH OR WEATHER	#6 BARS AND LARGER	2"
	#5 BARS AND SMALLER	1 1/2"
NOTES	TOLERANCE FOR CONCRETE COVER AND REINFORCEMENT LOCATION IS ±3/8"	

bhd ARCHITECTS
www.bhdarchitects.com
Phone 801.571.0010
Fax 801.571.0303
Toll Free 888.571.0010
65 East Wadsworth Park Drive
Suite 205 Draper, Utah 84020

Matthew C. McBride No. 353893 5/29/25 STATE OF UTAH

ARW ENGINEERS

THE CHURCH OF JESUS CHRIST OF LATTER-DAY SAINTS

Nibley 6 & Nibley UT West Stake

Approx. 3410 South 1200 West, Nibley, Utah
41.670809, -111.860775

Owner #: 514-4728
Plan Series: Heritage 24
County Parcel: 03:050:0016
BHD #: 2403
Date: 29 May 2025

Drawing Issue and Revision Schedule

#	Date	Description
1	29 May 2025	Bid Documents

Schedules

S602

C:\Users\jackson\Documents\S-25705 - Nibley 6 - Her 24 - 2025_jackson.rvt
5/20/2025 3:10:12 PM

SCHEDULE A

STRUCTURAL WOOD WALL SCHEDULE

MARK	NOMINAL STUD SIZE[12,14]	STUD SPACING	SILL PLATE[4,5]	TOP PLATES[20]	WOOD SHEATHING THICKNESS[13,15,16,17,18,19]	COMMENT	EDGE NAILING[5,6,7,8,9]	SILL PLATE ATTACHMENT[1,2]
W4-B	1 1/2"x3 1/2" SCL	16"	1 1/2"x3 1/2" SCL	(2) 1 1/2"x3 1/2" SCL	---		---	POWDER ACTUATED FASTENER AT 24" ON CENTER[3]
W4-C	2x4	16"	(2) 2x4	(2) 2x4	(2) 7/16"		4"	5/8" DIAMETER x 8" EMBEDMENT ANCHOR AT 16" ON CENTER
W6-A	2x6	16"	2x6	(2) 2x6	---		---	POWDER ACTUATED FASTENER AT 24" ON CENTER
W6-B	2x6	16"	2x6	(2) 2x6	7/16"		6"	5/8" DIAMETER x 8" EMBEDMENT ANCHOR AT 32" ON CENTER
W6-C	1 3/4"x5 1/2" LVL	16"	1 1/2"x5 1/2" SCL	(3) 1 3/4"x5 1/2" SCL	---		---	POWDER ACTUATED FASTENER AT 24" ON CENTER[3]
W6-D	1 3/4"x5 1/2" LVL	16"	1 1/2"x5 1/2" SCL	(2) 1 3/4"x5 1/2" SCL	7/16"		6"	POWDER ACTUATED FASTENER AT 24" ON CENTER[3]
W6-E	1 1/2"x5 1/2" SCL	16"	1 1/2"x5 1/2" SCL	(2) 1 1/2"x5 1/2" SCL	---		---	POWDER ACTUATED FASTENER AT 24" ON CENTER[3]
W6-F	2x6	24"	2x6	(2) 2x6	---		---	SEE SHEET S525
W8-A	2x8	16"	2x8	(2) 1 1/2"x7 1/4" SCL	7/16"		6"	5/8" DIAMETER x 8" EMBEDMENT ANCHOR AT 32" ON CENTER
W8-B	1 1/2" x 7 1/4" SCL	16"	1 1/2"x7 1/4" SCL	(2) 1 1/2"x7 1/4" SCL	7/16"		6"	5/8" DIAMETER x 8" EMBEDMENT ANCHOR AT 32" ON CENTER
W8-C	2x8	16"	2x8	(2) 1 1/2"x7 1/4" SCL	---		---	POWDER ACTUATED FASTENER AT 24" ON CENTER[3]
W10-A	1 3/4" x 9 1/2" LVL	16"	1 1/2"x9 1/2" SCL	(2) 1 1/2"x9 1/2" SCL	7/16"		6"	5/8" DIAMETER x 8" EMBEDMENT ANCHOR AT 32" ON CENTER
W10-B[10,11,12]	1 1/2" x 9 1/2" LSL	12"	3"x9 1/2" SCL,[11,12]	(2) 1 1/2"x9 1/2" SCL	7/16"		3"	5/8" DIAMETER x 8" EMBEDMENT ANCHOR AT 16" ON CENTER
W10-C[10,11,12]	1 3/4" x 9 1/2" LVL	16"	3"x9 1/2" SCL,[11,12]	(2) 1 1/2"x9 1/2" SCL	7/16"		3"	5/8" DIAMETER x 8" EMBEDMENT ANCHOR AT 16" ON CENTER
W12-B	(2)1 3/4" x 11 7/8" LVL	16"	1 1/2"x11 7/8" SCL	(2) 1 1/2"x11 7/8" SCL	7/16"		4"	5/8" DIAMETER x 8" EMBEDMENT ANCHOR AT 24" ON CENTER

NOTES:
1. ALL ANCHOR BOLTS AT SILL PLATE ATTACHMENT SHALL HAVE A 1/4" x 3" x 3" MINIMUM WASHER BETWEEN THE SILL PLATE AND THE ANCHOR NUT. SEE ANCHOR BOLT PLATE WASHER DETAIL ON THIS SCHEDULE.
2. 5/8" DIAMETER SILL PLATE ANCHOR BOLTS MAY BE REPLACED WITH POST-INSTALLED ADHESIVE ANCHORS, DRILLED-IN EXPANSION BOLTS SCREW ANCHORS. REFER TO SPECIFICATION SECTION 03 1511 FOR ACCEPTABLE PRODUCTS. NOTIFY ENGINEER OF ANCHOR SELECTED FOR EMBEDMENT, SPACING, AND OTHER INSTALLATION REQUIREMENTS.
3. POWDER ACTUATED FASTENERS TO BE HILTI 'X-DNI 72P8' OR EQUIVALENT.
4. ALL WOOD IN CONTACT WITH CONCRETE SHALL BE PRESSURE TREATED.
5. FASTENERS FOR PRESERVATIVE AND TREATED WOOD SHALL BE HOT DIPPED ZINC COATED GALVANIZED STEEL, STAINLESS STEEL, SILICONE BRONZE, OR COPPER, UNLESS WOOD IS BORATE TREATED.
   a. EXCEPTION: PLAIN CARBON STEEL FASTENERS, INCLUDING NUTS AND WASHERS, IN SBX/DOT AND ZINC BORATE PRESERVATIVE-TREATED WOOD IN ANY INTERIOR, DRY ENVIRONMENT IS PERMITTED.
6. ALL NAILS TO BE HEAD MARKED FOR EASY IDENTIFICATION AFTER INSTALLATION.
7. ALL NAILS ATTACHING WOOD SHEATHING TO WALLS TO BE 10d COMMON.
8. FIELD NAIL SPACING TO BE 6" ON CENTER.
9. LENGTHS OF NAILS ATTACHING THE SHEATHING MAY BE REDUCED PROVIDED THE MINIMUM PENETRATION NOTED IN REQUIRED NAIL TYPES SHEDULE ON S604 IS ACHIEVED.
10. SPECIAL INSPECTION IS REQUIRED.
11. A 3x NOMINAL STUD AND BLOCKING REQUIRED AT ADJOINING PANEL EDGE.
12. WHERE NAIL SPACING IS 3" OR LESS, MEMBERS AT ADJOINING PANEL EDGES SHALL NOT BE LESS THAN 3" NOMINAL. JOINT AND SILL NAILING SHALL BE STAGGERED.
    a. AS AN ALTERNATE TO USING A 3x NOMINAL STUD OR SILL PLATE, USE (2) 2x MEMBERS SPIKED TOGETHER WITH 16d NAILS AT 3" ON CENTER, STAGGERED.
       1. AT WALLS REQUIRING 3X SILL PLATE, IT IS PERMISSIBLE TO USE A TREATED 2x MEMBER IN CONTACT WITH THE CONCRETE AND AND UNTREATED 2x MEMBER ON TOP.
    b. WHERE WOOD SHEATHING IS APPLIED ON BOTH FACES OF A WALL AND NAIL SPACING IS LESS THAN 6" ON CENTER ON EITHER SIDE, WOOD SHEATHING JOINTS SHALL BE OFFSET TO FALL ON DIFFERENT STUDS. ALTERNATIVELY, THE WIDTH OF THE NAILED FACE OF STUDS SHALL BE 3" NOMINAL OR GREATER AT ADJOINING WOOD SHEATHING EDGES AND NAILS AT ALL WOOD SHEATHING EDGES SHALL BE STAGGERED.
13. AT EXTERIOR WALLS, COORDINATE WITH ARCHITECTURAL DETAILS WHERE SHEATHING IS REQUIRED TO EXTEND HIGHER THAN TOP PLATES FOR OTHER EXTERIOR FINISHES.
14. FOR LUMBER WALLS TALLER THAN 15'-0", CHANGE LUMBER MATERIAL TO SCL MATERIAL IF NOT ALREADY SCHEDULED AS SUCH.
15. WALL SHEATHING MAY BE INSTALLED WITH THE LONG DIRECTION HORIZONTAL OR VERTICAL.
16. SHEATHING MAY BE INSTALLED IN STACKED INSTEAD OF RUNNING PATTERN AT CONTRACTOR'S OPTION.
17. ALL SHEATHING SHALL HAVE A SPAN RATING OF 24/16 OR BETTER UNLESS OTHERWISE NOTED.
18. ALL WALL SHEATHING SHALL COMPLY WITH PS1-95 OR PS2-92
19. SOLID BLOCK ALL WOOD WALL SHEATHING PANEL JOINTS, SEE BLOCKING DETAIL THIS SCHEDULE.
20. FOR INTERIOR WALLS LOCATE ANCHOR BOLTS IN CENTER OF WALL. AT EXTERIOR WALLS LOCATE ANCHOR BOLTS FOLLOWING THE PROVIDED SCHEDULE BELOW. AT DOUBLE SIDED WALL, REFER TO ANCHOR BOLT PLATE WASHER DETAIL FOR MORE INFORMATION.

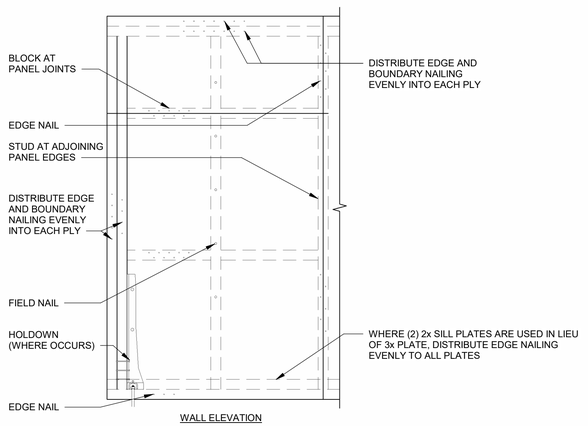

WALL ELEVATION

NOMINAL STUD WALL	DISTANCE FROM INSIDE FACE OF FOUNDATION WALL TO CENTER OF BOLT
2x6	3"
2x8	4"
2x10	6 1/2"
2x12	9"

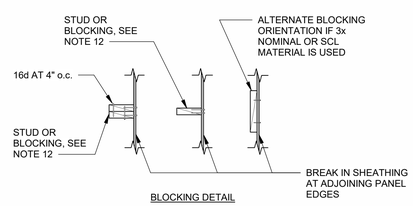

BLOCKING DETAIL

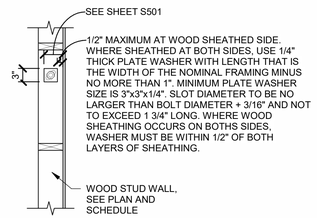

ANCHOR BOLT PLATE WASHER DETAIL

SCHEDULE B

WOOD BEAM SCHEDULE

MARK	SIZE [2, 3]	MATERIAL	JAMB [1, 2, 7]		DESCRIPTION
			BEARING STUDS [5]	KING STUDS [6]	
BM-1	(3) 2x6	DF #2	1	1	TYP. EXTERIOR HEADER
BM-2	(2) 2x6	DF #2	1	1	TYP. INTERIOR HEADERS
BM-3	(3) 2x10	DF #2	3	1	TURN IN CORRIDOR FRAMING
BM-4	(3) 2x10	DF #2	2	1	SHORT HEADER ON GRID 4 AND 6
BM-5	(3) 1 3/4" x 11 7/8"	SCL	4	1	MED. HEADER ON GRID 4 AND 6
BM-6	(3) 2x8	DF #2	1	1	EXTERIOR HEADERS
BM-7	(3) 1 3/4" x 14"	SCL	2	2	MAIN FOYER BEAM SUPPORT PLAT. AND COVE BEAMS
BM-8	(3) 1 3/4" x 11 7/8"	SCL	1	1	CHAPEL LIGHT COVE SUPPORT
BM-9	5 1/8" x 21"	GLB	2	2	STAGE PARTITION BEAM
BM-11	(4) 1 3/4" x 11 7/8"	SCL	5	--	SIDE CLASSROOM PARTITION BEAM, SEE 2, 3, AND 4/S513
BM-12	(2) 1 3/4" x 11 7/8"	SCL	--	--	GIRDER AT STAIRS
BM-13	(3) 1 3/4" x 9 1/2"	SCL	2	4	EXTERIOR HIGH BEAM AT STORE FRONT AT SIDE ENTRY
BM-14	(2) 1 3/4" x 9 1/2"	SCL	2	4	LOW BEAM AT STORE FRONT AT SIDE ENTRY
BM-15	(3) 1 3/4" x 9 1/2"	SCL	2	2	INSIDE STOREFRONT AT SIDE ENTRY
BM-16	(3) 1 3/4" x 9 1/2"	SCL	2	5	BEAM BEHIND PRECAST ARCH AT MAIN SIDE ENTRY
BM-17	(2) 1 3/4" x 7 1/4"	SCL	2	2	CHAPEL WINDOWS
BM-18	(3) 1 3/4" x 14"	SCL	3	1	EQUIP. PLATFORM OPENING ON GRID 4 AND 6
BM-19	(2) 1 3/4" x 7 1/4"	SCL	2	3	REAR ENTRY BEAM
BM-21	(4) 1 3/4" x 11 7/8"	SCL	2	--	STEEPLE SUPPORT BEAM, SEE A/S401
BM-24	5 1/2" x 27"	GLB	--	--	CHAPEL ENTRY BEAM
BM-25	5 1/2" x 27"	GLB	--	--	SKYFOLD SUPPORT BEAM

NOTES:
1. SEE STRUCTURAL WOOD WALL SCHEDULE FOR JAMB MATERIAL AND NOMINAL SIZE.
2. USE FILLERS AS NEEDED TO HAVE ALL BEAMS OR HEADERS MATCH WIDTH OF WALL IN WHICH BEAM IS LOCATED.
3. BEAMS OF MULTIPLE MEMBERS MAY BE REPLACED WITH A SINGLE MEMBER OF EQUIVALENT SIZE AND MATERIAL PROPERTIES.
4. SEE NAILING PATTERN SHOWN IN WOOD JAMB FASTENING FOR MULTIPLE-PLY BEARING AND KING STUDS.
5. USE 16d NAILS TO BUILD UP 2 OR 3 STUD COLUMNS.
   - ADJACENT NAILS ARE TO BE DRIVEN FROM OPPOSING SIDES OF COLUMN.
   - 3 1/2" WIDE COLUMNS REQUIRE ONE ROW OF STAGGERED NAILS. ALL OTHER COLUMNS REQUIRE TWO ROWS OF NAILS.
6. KING STUDS EXTEND FROM TOP OF SILL PLATE TO BOTTOM OF TOP WALL PLATES.
7. BEARING STUDS EXTEND FROM TOP OF SILL PLATE TO BOTTOM OF BEAM OR HEADER.

WOOD BEAM FASTENING AND ATTACHMENT

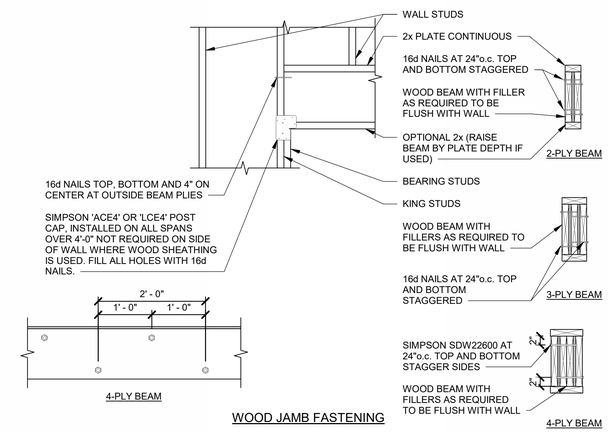

WOOD JAMB FASTENING

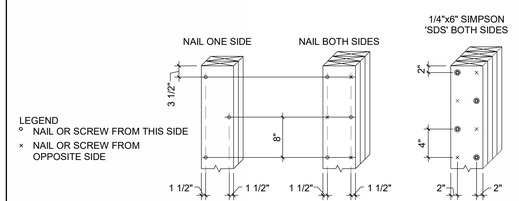

bhd ARCHITECTS
www.bhdarchitects.com
Phone 801.571.0010
Fax 801.571.0303
Toll Free 888.571.0010
65 East Wadsworth Park Drive
Suite 205 Draper, Utah 84020

STRUCTURAL ENGINEER — Matthew C. McBride — No. 353893 — 5/29/25 — STATE OF UTAH

ARW ENGINEERS

THE CHURCH OF JESUS CHRIST OF LATTER-DAY SAINTS

Nibley 6 &
Nibley UT West Stake

Approx. 3410 South 1200 West, Nibley, Utah
41.670809, -111.840775

Owner #: 514-4728
Plan Series: Heritage 24
County Parcel: 03:050:0016
BHD #: 2403
Date: 29 May 2025

Drawing Issue and Revision Schedule

#	Date	Description
1	29 May 2025	Bid Documents

Schedules

S603

C:\Users\jackson\Documents\S-25705 - Nibley 6 - Her 24 - 2025_jacksonOEM82.rvt
5/20/2025 3:10:13 PM

SCHEDULE A

REQUIRED NAIL TYPES

NOTES:
1. EXCEPT WHERE NOTED OTHERWIDE, THE NUMBER AND SIZE OF NAILS CONNECTING WOOD MEMBERS SHALL NOT BE LESS THAN THAT SET FORTH IN IBC TABLE 2304.9.1
   a. CONNECTION FOR MULTIPLE PIECES OF ENGINEERED LUMBER PIECES SHALL BE IN ACCORDANCE WITH MANUFACTURER SPECIFICATIONS.
   b. WHERE 16d COMMON NAILS ARE CALLED OUT IN IBC TABLE 2304.9.1 USE 16d BOX NAILS.
2. ALL NAILS NOTED ON THE DRAWINGS SHALL BE AS SHOWN BELOW UNLESS NOTED OTHERWISE; NAILS FOR 3RD PARTY HARDWARE SHALL BE AS REQUIRED BY MANUFACTURER OF HARDWARE.
3. ALL FASTENERS FOR PRESERVATIVE AND FIRE RETARDENT TREATED WOOD SHALL BE HOT DIPPED ZINC COATED GALVANIZED STEEL, STAINLESS STEEL, SILICONE BRONZE, OR COPPER, UNLESS WOOD IS BORATE TREATED. EXCEPTION: PLAIN CARBON STEEL FASTENERS, INCLUDING NUTS AND WASHERS, IN SBX/DOT AND ZINC BORATE PRESERVATIVE-TREATED WOOD IN AN INTERIOR, DRY ENVIRONMENT AREPERMITTED.
4. LENGTH OF NAILS ATTACHING SHEATHING MAY BE REDUCED PROVIDED THAT THE MINIMUM PENETRATION NOTED BELOW IS MET.
5. NAILS USED IN SIMPSON HARDWARE (OR HARDWARE OF EQUAL VALUE) SHALL BE AS SPECIFIED BY THE MANUFACTURER.
6. OTHER FASTENERS MAY BE USED TO REPLACE NAILS BUT THEY MUST HAVE EQUIVALENT, OR LARGER, DIAMETERS AND PENETRATION LENGTHS.

ALL NAILS NOTED ON THE DRAWINGS SHALL BE AS SHOWN BELOW, UNLESS NOTED OTHERWISE.

NAIL SIZE	TYPE	STANDARD LENGTH (INCHES)	DIAMETER (INCHES)	MINIMUM PENETRATION REQUIRED (INCHES)
8d	COMMON	2 1/2	.131	1 3/8
10d	COMMON	3	.148	1 1/2
16d	SINKER	3 1/4	.148	1 1/2
16d	BOX	3 1/2	.135	1 1/2

SCHEDULE B

DEFERRED SUBMITTALS

FOR THE PURPOSE OF THIS SECTION, DEFERRED SUBMITTALS ARE DEFINED PER THE IBC. SUBMITTAL DOCUMENTS FOR DEFERRED SUBMITTAL ITEMS SHALL BE SUBMITTED TO THE ENGINEER, ARCHITECT, AND BUILDING OFFICIAL FOR THEIR REVIEW FOR GENERAL CONFORMANCE WITH THE DESIGN OF THE BUILDING. DEFERRED STRUCTURAL SUBMITTALS FOR THIS PROJECT ARE:
1. PREFABRICATED METAL PLATE WOOD TRUSSES
2. STEEPLE...

SCHEDULE C

WIND COMPONENTS AND CLADDING

WIND ZONE	COMPONENTS AND CLADDING NEGATIVE PRESSURE EFFECTIVE WIND AREA (SQ FT.)				
	10 sq ft.	20 sq ft.	50 sq ft.	100 sq ft.	500 sq ft.
1	33.4	33.4	28.7	25.1	19.5
2	63.1	59.1	53.7	49.6	47.3
3	75.1	65.4	52.6	43.0	39.3
4	25.4	24.4	23.0	21.9	19.5
5	31.4	29.3	26.5	24.4	19.5

SCHEDULE D

TYPICAL BLOCKING SCHEDULE

DOOR STOPS	STAIR BLOCKING
VISUAL DISPLAYS	DECORATIVE METAL BETWEEN WINDOWS
MARKER BOARDS	DRINKING FOUNTAINS
TACK BOARDS	WALL HUNG SINKS
BABY CHANGING STATIONS	ROSTRUM
EXIT SIGNS	DECORATION HOOKS
CHAIR RAIL	JANITOR SHELVING
COAT RACKS	RA VENTS AT ENTRIES
CABINETS	COLUMNS AT ENTRIES
SOUND PANELS	CAN LIGHTS AT ENTRIES
TOILET PARTITIONS	HYMN BOOK SHELVES
HANDICAP BARS	DIMMER SWITCHES IN GYM
BATHROOM ACCESSORIES	CURTAIN AT STAGE
TOWEL DISPENSORS	CURTAINS IN OFFICES
TOILET PAPER HOLDERS	JANITOR TAP AND HOSE HARDWARE
NAPKIN HOLDERS	FONT MIRRORS
SHELVES	FONT HANDRAILS
MIRRORS	FONT BENCHES
COUNTERS	CLOTHING HOOKS
COUNTER BRACKETS	FONT GLASS SCREEN
ACCESS PANELS	CHAIR STORAGE SHELVING
HANDRAILS	INTERIOR SOFFIT FOR SIX PIECE CORNICE
FIRE CABINETS	WATER HEATERSEISMIC STRAPS (2) UNISTRUT. RUNNING PARALLEL TO FRAMING
WALL MOUNTED HANDRAILS	

SCHEDULE E

SHEATHING TYPE AND NAILING SCHEDULE

LOCATION	SHEATHING	EDGE NAILING[1, 2]	FIELD NAILING[1, 2]	BOUNDARY NAILING[1, 2]	BLOCKING AT PANEL EDGES
ROOF, UNBLOCKED	19/32" 40/20 SPAN RATING	10d AT 6"o.c.	10d AT 6"o.c.	10d AT 6"o.c.	NO
ROOF, BLOCKED[4] TYPE 1	19/32" 40/20 SPAN RATING	10d AT 6"o.c.	10d AT 6"o.c.	10d AT 6"o.c.	YES
ROOF, BLOCKED[4] TYPE 2	19/32" 40/20 SPAN RATING	10d AT 3"o.c.	10d AT 6"o.c.	10d AT 2"o.c.	YES
EQUIPMENT[3] PLATFORM	23/32" 48/24 SPAN RATING T&G	10d AT 6"o.c.	10d AT 12"o.c.	10d AT 6"o.c.	NO
ROSTRUM[3]	(2) LAYERS 19/32" 40/20 SPAN RATING	10d AT 6"o.c.	10d AT 12"o.c.	10d AT 6"o.c.	NO
PLATFORM[3]	(2) LAYERS 19/32" 40/20 SPAN RATING	10d AT 6"o.c.	10d AT 12"o.c.	10d AT 6"o.c.	NO
WALLS	SEE WOOD WALL SCHEDULE				

NOTES:
1. SEE PARTIAL PLAN BELOW FOR LOCATION OF BOUNDARY, EDGE, AND FIELD NAILING.
2. ALL FASTENERS FOR PRESERVATIVE AND FIRE RETARDANT TREATED WOOD SHALL BE HOT DIPPED ZINC COATED GLAVANIZED STEEL, STAINLESS STEEL, SILICONE BRONZE, OR COPPER, UNLESS WOOD IS BORATE TREATED. EXCEPTION: PLAIN CARBON STEEL FASTENERS, INCLUDING NUTS AND WASHERS, IN SBX/DOT AND ZINC BORATE PRESERVATIVE- TREATED WOOD IN AN INTERIOR, DRY ENVIRONMENT ARE PERMITTED.
3. FOR EQUIPMENT PLATFORM, ROSTRUM, AND PLATFORM SHEATHING SHALL BE GLUED AND NAILED TO THE STRUCTURE.
4. SPECIAL INSPECTION REQUIRED.

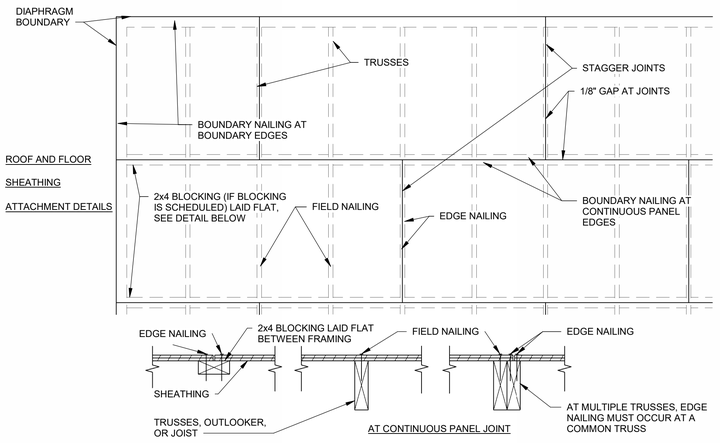

SCHEDULE F

STEEL ANGLE LINTEL SCHEDULE FOR VENEER

CLEAR OPENING	SIZE OF ANGLE
UP TO 7'-0"	4" x 4" x 3/8"
7'-1" TO 9'-0"	6" x 4" x 5/16"
9'-1" TO 10'-0"	6" x 4" x 5/16"
10'-1" TO 11'-0"	6 x 4" x 3/8"
11'-1" TO 12'-0"	6" x 4" x 7/16"
12'-1" TO 13'-0"	8" x 4" x 7/16"
13'-1" AND OVER	REQUIRES SPECIAL ANALYSIS, CONTACT ENGINEER

NOTES:
1. LINTELS CARRY BRICK VENEER OR STONE ONLY.
2. WHERE FLOORS, ROOFS, OR CONCENTRATED LOADS OCCUR ABOVE, FURTHER ANALYSIS IS NECESSARY. CONTACT ARCHITECT AND ENGINEER.
3. ANGLES ARE TO BE HOT DIPPED GALVANIZED AND "PAINTED".
4. ANGLE ARE TO BE ORIENTED WITH 4" LEG HORIZONTAL.
5. ANCHOR ANGLES TO BEAMS, HEADERS, TOP-PLATES, ETCETERA WITH (2) 3" SDS SCREW AT 12"o.c., STAGGERED.
6. AT LOCATIONS WHERE ANGLE IS USED FOR BRICK BENEER OR STONE AT STUD WALL, USE 3x12 BLOCKING BEHIND ANGLE LOCATION.
7. AT LOCATIONS WHERE ANGLE EXTENDS BEYOND OPENING AND BEARS ON BRICK PROVIDE 1" OF BEARING EACH END FOR EACH FOOT OF SPAN. MINIMUM BEARING OF 6" EACH SIDE OF OPENING.

bhd ARCHITECTS
www.bhdarchitects.com
Phone 801.571.0010
Fax 801.571.0303
Toll Free 888.571.0010
65 East Wadsworth Park Drive
Suite 205 Draper, Utah 84020

Matthew C. McBride No. 353893 5/29/25 STATE OF UTAH

ARW ENGINEERS

THE CHURCH OF JESUS CHRIST OF LATTER-DAY SAINTS

Nibley 6 & Nibley UT West Stake

Approx. 3410 South 1200 West, Nibley, Utah
41.670809, -111.860775

Owner #: 514-4728
Plan Series: Heritage 24
County Parcel: 03:050:0016
BHD #: 2403
Date: 29 May 2025

Drawing Issue and Revision Schedule

#	Date	Description
1	29 May 2025	Bid Documents

Schedules

S604

C:\Users\jackson\Documents\S-25705 - Nibley 6 - Her 24 - 2025_jackson@EM82.rvt
5/20/2025 3:10:15 PM

STRUCTURAL STEEL SPECIAL INSPECTION SCHEDULE

ESTABLISHED PER 2021 IBC SECTION 1705.2.1

INSPECTION TASKS PRIOR TO WELDING (TABLE N5.4-1)	FABRICATOR QUALITY CONTROL		SPECIAL INSPECTOR QUALITY ASSURANCE	
	CONTINUOUS	PERIODIC	CONTINUOUS	PERIODIC
WELDER QUALIFICATION RECORDS AND CONTINUITY RECORDS	●			●
WELDING PROCEDURE SPECIFICATIONS (WPSs) AVAILABLE	●		●	
MANUFACTURER CERTIFICATIONS FOR WELDING CONSUMABLES AVAILABLE	●		●	
MATERIAL IDENTIFICATION (TYPE / GRADE)		●		●
WELDER IDENTIFICATION SYSTEM[1]		●		●
FIT-UP OF GROOVE WELDS (INCLUDING JOINT GEOMETRY)		●		●
* JOINT PREPARATION				
* DIMENSIONS (ALIGNMENT, ROOT OPENING, ROOT FACE, BEVEL)				
* CLEANLINESS (CONDITION OF STEEL SURFACES)				
* TACKING (TACK WELD QUALITY AND LOCATION)				
* BACKING TYPE AND FIT (IF APPLICABLE)				
FIT-UP OF CJP GROOVE WELDS OFHSS T-, Y-, AND K-JOINTS WITHOUT BACKING (INCLUDING JOINT GEOMETRY)	●			●
* JOINT PREPARATIONS				
* DIMENSIONS (ALIGNMENT, ROOT OPENING, ROOT FACE, BEVEL)				
* CLEANLINESS (CONDITION OF STEEL SURFACES)				
* TACKING (TACK WELD QUALITY AND LOCATION)				
CONFIGURATION AND FINISH OF ACCESS HOLES		●		●
FIT-UP OF FILLET WELDS		●		●
* DIMENSIONS (ALIGNMENT, GAPS AT ROOT)				
* CLEANLINESS (CONDITION OF STEEL SURFACES)				
* TACKING (TACK WELD QUALITY AND LOCATION)				
CHECK WELDING EQUIPMENT		●		

[1]THE FABRICATOR OR ERECTOR, AS APPLICABLE, SHALL MAINTAIN A SYSTEM BY WHICH A WELDER WHO HAS WELDED A JOINT OR MEMBER CAN BE IDENTIFIED. STAMPS, IF USED, SHALL BE THE LOW-STRESS TYPE.

INSPECTION TASKS DURING WELDING (TABLE N5.4-2)	CONTINUOUS	PERIODIC	CONTINUOUS	PERIODIC
CONTROL AND HANDLING OF WELDING CONSUMABLES		●		●
* PACKAGING				
* EXPOSURE CONTROL				
NO WELDING OVER CRACKED TACK WELDS		●		●
ENVIRONMENTAL CONDITIONS		●		●
* WIND SPEED WITHIN LIMITS				
* PRECIPITATION AND TEMPERATURE				
WPS FOLLOWED		●		●
* SETTINGS ON WELDING EQUIPMENT				
* TRAVEL SPEED				
* SELECTED WELDING MATERIALS				
* SHIELDING GAS TYPE / FLOW RATE				
* PREHEAT APPLIED				
* INTERPASS TEMPERATURE MAINTAINED (MIN. / MAX)				
* PROPER POSITION (F, V, H, OH)				
WELDING TECHNIQUES		●		●
* INTERPASS AND FINAL CLEANING				
* EACH PASS WITHIN PROFILE LIMITATIONS				
* EACH PASS MEETS QUALITY REQUIREMENTS				
PLACEMENT AND INSTALLATION OF STEEL HEADED STUD ANCHORS	●		●	

INSPECTION TASKS AFTER WELDING (TABLE N5.4-3)	CONTINUOUS	PERIODIC	CONTINUOUS	PERIODIC
WELDS CLEANED		●		●
SIZE, LENGTH AND LOCATION OF WELDS	●		●	
WELDS MEET VISUAL ACCEPTANCE CRITERIA	●		●	
* CRACK PROHIBITION				
* WELD / BASE-METAL FUSION				
* CRATER CROSS SECTION				
* WELD PROFILES				
* WELD SIZE				
* UNDERCUT				
* POROSITY				
ARC STRIKES	●		●	
K-AREA[1]	●		●	
WELD ACCESS HOLES IN ROLLED HEAVY SHAPES AND BUILT-UP HEAVY SHAPES[2]	●		●	
BACKING REMOVED AND WELD TABS REMOVED (IF REQUIRED)	●		●	
REPAIR ACTIVITIES	●		●	
DOCUMENT ACCEPTANCE OR REJECTION OF WELDED JOINT OR MEMBER	●		●	
NO PROHIBITED WELDS HAVE BEEN ADDED WITHOUT THE APPROVAL OF THE EOR		●		●

[1]WHEN WELDING OF DOUBLER PLATES, CONTINUITY PLATES OR STIFFENERS HAS BEEN PERFORMED IN THE K-AREA, VISUALLY INSPECT THE WEB K-AREA FOR CRACKS WITHIN 3 IN. (75mm) OF THE WELD)
[2]AFTER ROLLED HEAVY SHAPES (SEE SECTION A3.1c) AND BUILT-UP HEAVY SHAPES (SEE SECTION A3.1d) ARE WELDED, VISUALLY INSPECT THE WELD ACCESS HOLE FOR CRACKS.

NOTES

1. PERIODIC - OBSERVE THESE ITEMS ON A RANDOM BASIS. OPERATIONS NEED NOT BE DELAYED PENDING THESE INSPECTIONS.
2. CONTINUOUS - PERFORM THESE TASKS FOR EACH WELDED JOINT OR MEMBER.
3. QUALITY CONTROL (QC) SHALL BE PROVIDED BY THE FABRICATOR AND ERECTOR.
4. QUALITY ASSURANCE (QA) SHALL BE PROVIDED BY OTHERS WHEN REQUIRED BY THE AUTHORITY HAVING JURISDICTION (AHJ), APPLICABLE BUILDING CODE (ABC), PURCHASER, OWNER, OR ENGINEER OF RECORD (EOR). NONDESTRUCTIVE TESTING (NDT) SHALL BE PERFORMED BY THE AGENCY OR FIRM RESPONSIBLE FOR QUALITY ASSURANCE, EXCEPT AS PERMITTED IN ACCORDANCE WITH SECTION N6.
5. QC AND QA INSPECTORS SHALL BE QUALIFIED IN ACCORDANCE WITH AISC 360-16 CHAPTER N4.
6. NONDESTRUCTIVE TESTING PERSONNEL SHALL BE QUALIFIED IN ACCORDANCE WITH AISC 360-16 CHAPTER N4.3.
7. NONDESTRUCTIVE TESTING OF WELDED JOINTS SHALL COMPLY WITH AISC 360-16 CHAPTER N5.5a AND b.
8. OBSERVATION OF WELDING OPERATIONS AND VISUAL INSPECTION OF IN-PROCESS AND COMPLETED WELDS SHALL BE THE PRIMARY METHOD TO CONFIRM THAT THE MATERIALS, PROCEDURES AND WORKMANSHIP ARE IN CONFORMANCE WITH THE CONSTRUCTION DOCUMENTS. FOR STRUCTURAL STEEL, ALL PROVISIONS OF AWS D1.1 / D1.1M STRUCTURAL WELDING CODE - STEEL FOR STATICALLY LOADED STRUCTURES SHALL APPLY.
9. THERMALLY CUT SURFACES OF ACCESS HOLES SHALL BE TESTED BY QA USING MT OR PT, WHEN THE FLANGE THICKNESS EXCEEDS 2 IN. (50mm) FOR ROLLED SHAPES, OR WHEN THE WEB THICKNESS EXCEEDS 2 IN. (50mm) FOR BUILT-UP SHAPES. ANY CRACK SHALL BE DEEMED UNACCEPTABLE REGARDLESS OF SIZE OR LOCATION.
10. WHEN REQUIRED BY APPENDIX 3, TABLE A-3.1, WELDED JOINTS REQUIRING WELD SOUNDNESS TO BE ESTABLISHED BY RADIOGRAPHICS OR ULTRASONIC INSPECTION SHALL BE TESTED BY QA AS PRESCRIBED. REDUCTION IN THE RATE OF UT IS PROHIBITED.
11. REDUCTION OF RATE OF ULTRASONIC TESTING - THE RATE OF UT IS ONLY PERMITTED TO BE REDUCED IF APPROVED BY THE EOR AND THE AHJ PER AISC 360-16 CHAPTER N5.5e.
12. FOR STRUCTURES IN RISK CATEGORY II, WHERE THE INITIAL RATE FOR UT IS 10%, THE NDT RATE FOR AN INDIVIDUAL WELDER OR WELDING OPERATOR SHALL BE INCREASED TO 100% SHOULD THE REJECT RATE, THE NUMBER OF WELDS CONTAINING UNACCEPTABLE DEFECTS DIVIDED BY THE NUMBER OF WELDS COMPLETED, EXCEEDS 5% OF THE WELDS TESTED FOR THE WELDER OR WELDING OPERATOR. A SAMPLING OF AT LEAST 20 COMPLETED WELDS FOR A JOB SHALL BE MADE PRIOR TO IMPLEMENTING SUCH AN INCREASE. WHEN THE REJECT RATE FOR THE WELDER OR WELDING OPERATOR, AFTER A SAMPLING OF AT LEAST 40 COMPLETED WELDS, HAS FALLEN TO 5% OR LESS, THE RATE OF UT SHALL BE RETURNED TO 10%. FOR EVALUATING THE REJECT RATE OF CONTINUOUS WELDS OVER 3 FT (1M) IN LENGTH WHERE THE EFFECTIVE THROAT IS 1 IN. (25mm) OR LESS, EACH 12 IN. (300mm) INCREMENT OR FRACTION THEREOF SHALL BE CONSIDERED AS ONE WELD. FOR EVALUATING THE REJECT RATE ON CONTINUOUS WELDS OVER 3 FT (1M) IN LENGTH WHERE THE EFFECTIVE THROAT IS GREATER THAN 1 IN. (25mm), EACH 6 IN. (150mm) OF LENGTH OR FRACTION THEREOF SHALL BE CONSIDERED ON WELD.
13. ALL NDT PERFORMED SHALL BE DOCUMENTED. FOR SHOP FABRICATION, THE NDT REPORT SHALL IDENTIFY THE TESTED WELD BY PIECE MARK AND LOCATION IN THE PIECE. FOR FIELD WORK, THE NDT REPORT SHALL IDENTIFY THE TESTED WELD BY LOCATION IN THE STRUCTURE, PIECE MARK, AND LOCATION IN THE PIECE. WHEN A WELD IS REJECTED ON THE BASIS OF NDT, THE NDT RECORD SHALL INDICATE THE LOCATION OF THE DEFECT AND THE BASIS OF REJECTION
14. DEMAND CRITICAL WELDS SHALL MEET THE PROVISION FOUND IN AISC 341-16 AND WELDING METHODS, PROCEDURES AND QUALITY CONTROL SHALL COMPLY WITH AWS D1.1 AND THE FOLLOWING:
    a. ARC STRIKES, GOUGES AND OTHER IMPERFECTIONS WITHIN OR ADJACENT TO THE JOINT, SHALL BE REPAIRED OR REMOVED.
    b. PREHEAT AND INTER-PASS REQUIREMENTS AS OUTLINED IN SECTION 3.5.
    c. UNREPAIRED CRACKS, GOUGES, AND NOTCHES WILL NOT BE PERMITTED IN THE JOINT AREA.
    d. USE ELECTRODES WITH CHARPY V-NOTCH ABSORBED ENERGY EQUAL TO OR GREATER THAN 20 FT-LBS AT 20 DEGREES FAHRENHEIT UNDER AWS A5 CLASSIFICATION TEST METHODS, AND 40 FT-LBS AT 70 DEGREES FAHRENHEIT USING TEST PROCEDURES PRESCRIBED IN APPENDIX X OF AISC 358. ACCEPTABLE ELECTRODES INCLUDE E70TG-K2, E71 T-1.

INSPECTION TASKS PRIOR TO BOLTING (TABLE N5.6-1)	CONTINUOUS	PERIODIC	CONTINUOUS	PERIODIC
MANUFACTURER'S CERTIFICATIONS AVAILABLE FOR FASTENER MATERIALS		●	●	
FASTENERS MARKED IN ACCORDANCE WITH ASTM REQUIREMENTS		●		●
PROPER FASTENERS SELECTED FOR THE JOINT DETAIL (GRADE, TYPE, BOLT LENGTH IF THREADS ARE TO BE EXCLUDED FROM SHEAR PLANE)		●		●
PROPER BOLTING PROCEDURES SELECTED FOR JOINT DETAIL		●		●
CONNECTING ELEMENTS, INCLUDING THE APPROPRIATE FAYING SURFACE CONDITION AND HOLE PREPARATION, IF SPECIFIED, MEET APPLICABLE REQUIREMENTS		●		●
PRE-INSTALLATION VERIFICATION TESTING BY INSTALLATION PERSONNEL OBSERVED AND DOCUMENTED FOR FASTENER ASSEMBLIES AND METHODS USED	●			●
PROPER STORAGE PROVIDED FOR BOLTS, NUTS, WASHERS AND OTHER FASTENER COMPONENTS		●		●

INSPECTION TASKS DURING BOLTING (TABLE N5.6-2)	CONTINUOUS	PERIODIC	CONTINUOUS	PERIODIC
FASTENER ASSEMBLIES, PLACED IN ALL HOLES AND WASHERS (IF REQUIRED) ARE POSITIONED AS REQUIRED		●		●
JOINT BROUGHT TO THE SNUG-TIGHT CONDITION PRIOR TO THE PRETENSIONING OPERATION		●		●
FASTENER COMPONENT NOT TURNED BY THE WRENCH PREVENTED FROM ROTATING		●		●
FASTENERS ARE PRETENSIONED IN ACCORDANCE WITH THE RCSC SPECIFICATION, PROGRESSING SYSTEMATICALLY FROM THE MOST RIGID POINT TOWARD THE FREE EDGES		●		●

INSPECTION TASKS AFTER BOLTING (TABLE N5.6-3)	CONTINUOUS	PERIODIC	CONTINUOUS	PERIODIC
DOCUMENT ACCEPTANCE OR REJECTION OF BOLTED CONNECTIONS	●		●	

NOTES

1. PERIODIC - OBSERVE THESE ITEMS ON A RANDOM BASIS. OPERATIONS NEED NOT BE DELAYED PENDING THESE INSPECTIONS.
2. CONTINUOUS - PERFORM THESE TASKS FOR EACH BOLTED CONNECTION.
3. QUALITY CONTROL (QC) SHALL BE PROVIDED BY THE FABRICATOR AND ERECTOR.
4. QUALITY ASSURANCE (QA) SHALL BE PROVIDED BY OTHERS WHEN REQUIRED BY THE AUTHORITY HAVING JURISDICTION (AHJ), APPLICABLE BUILDING CODE (ABC), PURCHASER, OWNER, OR ENGINEER OF RECORD (EOR). NONDESTRUCTIVE TESTING (NDT) SHALL BE PERFORMED BY THE AGENCY OR FIRM RESPONSIBLE FOR QUALITY ASSURANCE, EXCEPT AS PERMITTED IN ACCORDANCE WITH SECTION N7.
5. FOR SNUG-TIGHT JOINTS, PRE-INSTALLATION VERIFICATION TESTING AS SPECIFIED IN TABLE N5.6-1 AND MONITORING OF THE INSTALLATION PROCEDURES AS SPECIFIED IN TABLE N5.6-2 ARE NOT APPLICABLE. THE QCI AND QAI NEED NOT BE PRESENT DURING THE INSTALLATION OF FASTENERS IN SNUG-TIGHT JOINTS.
6. FOR PRETENSIONED JOINTS AND SLIP-CRITICAL JOINTS, WHEN THE INSTALLER IS USING THE TURN-OF-NUT METHOD WITH MATCHMARKING TECHNIQUES, THE DIRECT-TENSION-INDICATOR METHOD, OR THE TWIST-OFF-TYPE TENSION CONTROL BOLT METHOD, MONITORING OF BOLT PRETENSIONING PROCEDURES SHALL BE AS SPECIFIED IN TABLE N5.6-2. THE QCI AND QAI NEED NOT BE PRESENT DURING THE INSTALLATION OF FASTENERS WHEN THESE METHODS ARE USED BY THE INSTALLER.
7. FOR PRETENSIONED JOINTS AND SLIP-CRITICAL JOINTS, WHEN THE INSTALLER IS USING THE CALIBRATED WRENCH METHOD OR THE TURN-OF-NUT METHOD WITHOUT MATCHMARKING, MONITORING OF BOLT PRETENSIONING PROCEDURES SHALL BE AS SPECIFIED IN TABLE N5.6-2. THE QCI AND QAI SHALL BE ENGAGED IN THEIR ASSIGNED INSPECTION DUTIES DURING INSTALLATION OF FASTENERS WHEN THESE METHODS ARE USED BY THE INSTALLER.
8. OBSERVATION OF BOLTING OPERATIONS SHALL BE THE PRIMARY METHOD USED TO CONFIRM THAT THE MATERIALS, PROCEDURES AND WORKMANSHIP INCORPORATED IN CONSTRUCTION ARE IN CONFORMANCE WITH THE CONSTRUCTION DOCUMENTS AND THE PROVISIONS OF THE RCSC SPECIFICATION.

GENERAL STEEL SPECIAL INSPECTION NOTES :

1. QUALITY ASSURANCE (QA) INSPECTION OF FABRICATED ITEMS SHALL BE MADE AT THE FABRICATOR'S PLANT. THE QUALITY ASSURANCE INSPECTOR (QAI) SHALL SCHEDULE THIS WORK TO MINIMIZE INTERRUPTION TO THE WORK OF THE FABRICATOR.
2. QA INSPECTION OF THE ERECTED STEEL SYSTEM SHALL BE MADE AT THE PROJECT SITE. THE QAI SHALL SCHEDULE THIS WORK TO MINIMIZE INTERRUPTION TO THE WORK OF THE ERECTOR.
3. WHERE A TASK IS NOTED TO BE PERFORMED BY BOTH QC AND QA, IT IS PERMITTED TO COORDINATE THE INSPECTION FUNCTION BETWEEN THE QCI AND QAI SO THAT THE INSPECTION FUNCTIONS ARE PERFORMED BY ONLY ONE PARTY. WHERE QA RELIES UPON INSPECTION FUNCTIONS PERFORMED BY QC, THE APPROVAL OF THE ENGINEER OF RECORD AND THE AUTHORITY HAVING JURISDICTION IS REQUIRED.
4. THE FABRICATOR'S QCI SHALL INSPECT THE FABRICATED STEEL TO VERIFY COMPLIANCE WITH THE DETAILS SHOWN ON THE SHOP DRAWINGS, SUCH AS PROPER APPLICATION OF JOINT DETAILS AT EACH CONNECTION. THE ERECTOR'S QCI SHALL INSPECT THE ERECTED STEEL FRAME TO VERIFY COMPLIANCE WITH THE DETAILS SHOWN ON THE ERECTION DRAWINGS, SUCH AS BRACES, STIFFENERS, MEMBER LOCATIONS AND PROPER APPLICATION OF JOINT DETAILS AT EACH CONNECTION.
5. THE QAI SHALL BE ON THE PREMISES FOR INSPECTION DURING THE PLACEMENT OF ANCHOR RODS AND OTHER EMBEDMENTS SUPPORTING STRUCTURAL STEEL FOR COMPLIANCE WITH THE CONSTRUCTION DOCUMENTS. AS A MINIMUM, THE DIAMETER, GRADE, TYPE AND LENGTH OF THE ANCHOR ROD OR EMBEDDED ITEM, AND THE EXTENT OR DEPTH OF EMBEDMENT INTO THE CONCRETE, SHALL BE VERIFIED PRIOR TO PLACEMENT OF THE CONCRETE.
6. THE QAI SHALL INSPECT THE FABRICATED STEEL OR ERECTED STEEL FRAME, AS APPROPRIATE, TO VERIFY COMPLIANCE WITH THE DETAILS SHOWN ON THE CONSTRUCTION DOCUMENTS, SUCH AS BRACES, STIFFENERS, MEMBER LOCATIONS AND PROPER APPLICATION OF JOINT DETAILS AT EACH CONNECTION.
7. QUALITY ASSURANCE (QA) INSPECTIONS, EXCEPT NONDESTRUCTIVE TESTING (NDT), MAY BE WAIVED WHEN THE WORK IS PERFORMED IN A FABRICATING SHOP OR BY AN ERECTOR APPROVED BY THE AUTHORITY HAVING JURISDICTION (AHJ) TO PERFORM THE WORK WITHOUT QA. NDT OF WELDS COMPLETED IN AN APPROVED FABRICATOR'S SHOP MAY BE PERFORMED BY THAT FABRICATOR WHEN APPROVED BY THE AHJ. WHEN THE FABRICATOR PERFORMS THE NDT, THE QA AGENCY SHALL REVIEW THE FABRICATOR'S NDT REPORTS.
8. AT COMPLETION OF FABRICATION, THE APPROVED FABRICATOR SHALL SUBMIT A CERTIFICATE OF COMPLIANCE TO THE AHJ STATING THAT THE MATERIALS SUPPLIED AND WORK PERFORMED BY THE FABRICATOR ARE IN ACCORDANCE WITH THE CONSTRUCTION DOCUMENTS. AT COMPLETION OF ERECTION, THE APPROVED ERECTOR SHALL SUBMIT A CERTIFICATE OF COMPLIANCE TO THE AHJ STATING THAT THE MATERIALS SUPPLIED AND WORK PERFORMED BY THE ERECTOR ARE IN ACCORDANCE WITH THE CONSTRUCTION DOCUMENTS.
9. IDENTIFICATION AND REJECTION OF MATERIAL OR WORKMANSHIP THAT IS NOT IN CONFORMANCE WITH THE CONSTRUCTION DOCUMENTS, SHALL BE PERMITTED AT ANY TIME DURING THE PROGRESS OF THE WORK. HOWEVER, THIS PROVISION SHALL NOT RELIEVE THE OWNER OR THE INSPECTOR OF THE OBLIGATION FOR TIMELY, IN-SEQUENCE INSPECTIONS. NONCONFORMING MATERIAL AND WORKMANSHIP SHALL BE BROUGHT TO THE IMMEDIATE ATTENTION OF THE FABRICATOR OR ERECTOR, AS APPLICABLE.
10. NONCONFORMING MATERIAL OR WORKMANSHIP SHALL BE BROUGHT INTO CONFORMANCE, OR MADE SUITABLE FOR ITS INTENDED PURPOSE AS DETERMINED BY THE ENGINEER OF RECORD.
11. CONCURRENT WITH THE SUBMITTAL OF SUCH REPORTS TO THE AHJ, EOR OR OWNER, THE QA AGENCY SHALL SUBMIT TO THE FABRICATOR AND ERECTOR:
    (1) NONCONFORMANCE REPORTS
    (2) REPORTS OF REPAIR, REPLACEMENT OR ACCEPTANCE OF NONCONFORMING ITEMS.

bhd ARCHITECTS
www.bhdarchitects.com
Phone 801.571.0010
Fax 801.571.0303
Toll Free 888.571.0010
65 East Wadsworth Park Drive
Suite 205 Draper, Utah 84020

PROFESSIONAL STRUCTURAL ENGINEER Matthew C. McBride No. 353893 5/29/25 STATE OF UTAH

ARW ENGINEERS
structural consultants
1594 W. Park Circle Ogden, Utah 84404
+1 801 782 6008 arwengineers.com

THE CHURCH OF JESUS CHRIST OF LATTER-DAY SAINTS

Nibley 6 & Nibley UT West Stake

Approx. 3410 South 1200 West, Nibley, Utah
41.670809, -111.860775

Date:	BHD #:	County Parcel:	Plan Series:	Owner #:
29 May 2025	2403	03:050:0016	Heritage 24	514-4728

Drawing Issue and Revision Schedule

#	Date	Description
1	29 May 2025	Bid Documents

Schedules

S605

C:\Users\jacksonp\Documents\S-25705 - Nibley 6 - Her 24 - 2025_jacksonpQEMB2.rvt
5/20/2025 3:10:16 PM

LEGEND OF FIRE SUPPRESSION SYMBOLS AND ABBREVIATIONS

Sprinkler Head Schedule

Symbol	Count	Thread	K-Factor	Description	Note
⊗	-	1/2"	5.6	UPRIGHT	
◉	-	1/2"	5.6	FLAT CONCEALED PENDENT	
⊠	-	1/2"	5.6	DRY BARREL CONCEALED PENDENT	
◁	-	1/2"	5.6	SIDEWALL	
⋈	-	3/4"	8.0	ATTIC BB	
◑	-	1/2"	5.6	ATTIC AP	
⊁	-	1"	5.6	DRY SIDEWALL	
= Total Number of Heads this floor					

SYMBOLS

	AUTOMATIC AIR VENT
	BALL VALVE 2" & SMALLER BUTTERFLY VALVE 2-1/2" & LARGER
1 FS103	SECTION TAG - TOP FIGURE IS SECTION NO. BOTTOM FIGURE IS SHEET NO.
A M101	DETAIL TAG - TOP FIGURE IS DETAIL NO. BOTTOM FIGURE IS SHEET NO.
1	KEYED NOTE IDENTIFICATION
	PIPE TRANSITIONS UPWARDS
	PIPE TRANSITIONS DOWNWARDS
I T	INSPECTOR'S TEST VALVE
L T	LOW TEMPERATURE SENSOR PROVIDED BY DIVISION 28.
T S	TAMPER SWITCH
F S	FLOW SWITCH

SYMBOLS

	WATER FLOW ACTIVATED HORN/STROBE, BELL, OR GONG AS REQUIRED BY LOCAL AHJ.
	NRS GATE VALVE WITH SUPERVISION
	FLOW SWITCH
	FIRE RISER
	SPRINKLER HEADS. REFERENCE SPRINKLER HEAD SCHEDULE.
F	FIRE SPRINKLER WATER
	FIRE SPRINKLER WATER LINE HIDDEN BELOW
	FIRE DEPARTMENT CONNECTION
	CHECK VALVE, ORIENTED IN WATER FLOW DIRECTION AS INDICATED BY ARROW
	SWAY BRACING
	PIPE HANGER
	4-WAY SEISMIC BRACING
	PIPE CONTINUATION

HYDRAULIC DESIGN INFORMATION FOR OFFICE WET SYSTEM

REMOTE AREA = _____SQUARE FEET
DENSITY = _____GPM / SQUARE FEET
RISER BASE = _____GPM _____PSI

HYDRAULIC DESIGN INFORMATION FOR MEZZANINE WET SYSTEM

REMOTE AREA = _____SQUARE FEET
DENSITY = _____GPM / SQUARE FEET
RISER BASE = _____GPM _____PSI

HYDRAULIC DESIGN INFORMATION FOR ATTIC WET SYSTEM

REMOTE AREA = _____SQUARE FEET
DENSITY = _____GPM / SQUARE FEET
RISER BASE = _____GPM _____PSI

HYDRAULIC DESIGN INFORMATION FOR CHAPEL WET SYSTEM

REMOTE AREA = _____SQUARE FEET
DENSITY = _____GPM / SQUARE FEET
RISER BASE = _____GPM _____PSI

RAW WATER FLOW TEST

TEST DATE: XX XXX XXXX TEST TIME: 11:00 AM
STATIC: XX-PSI RESIDUAL: XX-PSI
FLOW: X,XXX-GPM LOCATION:
TEST BY: XXXX.

REDUCED WATER FLOW TEST

TEST DATE: X TEST TIME: X:XX AM
STATIC: XX-PSI RESIDUAL: XX-PSI (15% REDUCTION)
FLOW: X,XXX -GPM LOCATION:
RED BY: ENGINEER OF RECORD NOTE: ADDITIONAL SAFETY FACTOR IS NOT REQUIRED.

FP GENERAL NOTES

1. DRAWING SHOULD NOT BE CONSIDERED AS A SHOP DRAWING. CONTRACTOR TO FIELD VERIFY EXISTING CONDITIONS AND COORDINATE ALL PIPING WITH STRUCTURAL, MECHANICAL AND ELECTRICAL. SUBMIT SHOP DRAWINGS FOR FINAL REVIEW.
2. OFFSETS ARE TO BE ANTICIPATED IN BRANCH LINES AND ARE TO BE COORDINATED BY THE CONTRACTOR WITH EXISTING CONDITIONS AND OTHER TRADES. MAKE ADDITIONAL OFFSETS AS REQUIRED.
3. HANGERS AND BRACING ARE NOT SHOWN ON THIS DRAWING. REFER TO THE SPECIFICATION REQUIREMENTS AND INSTALL ACCORDINGLY.
4. ALL SPRINKLERS ARE TO BE QUICK RESPONSE. PENDANT SPRINKLERS SHALL BE CONCEALED TYPE. SPRINKLERS IN ATTIC ARE TO BE LISTED.
5. CONTRACTOR IS TO DEVELOP SHOP DRAWINGS AND HYDRAULIC CALCULATIONS CONFORMING TO NFPA 13 SPRINKLER. ADDITIONAL HEADS AND/OR PIPING REQUIRED TO MEET SAID STANDARDS IS THE RESPONSIBILITY OF THE CONTRACTOR. LOCATION OF ADDITIONAL HEADS ARE TO BE COORDINATED WITH ARCHITECT AND ENGINEER AND SUBMITTED FOR THEIR REVIEW. PIPE SIZES SHOWN ON DRAWING ARE FOR ILLUSTRATION PURPOSES ONLY FOR GENERAL COORDINATION.
6. NO FIRE PROTECTION LINE SHALL BE DESIGNED OR INSTALLED PRIOR TO CLOSE COORDINATION WITH ALL OTHER DISCIPLINES. FAILURE TO COMPLY WILL RESULT IN THE MODIFICATION OR REINSTALLATION AT THE CONTRACTORS EXPENSE.
7. ALL WORK DONE SHALL BE PERFORMED WITH WATER CONTROL IN MIND. CONTAINMENT OF WATER IS NECESSARY TO PREVENT WATER FROM DAMAGING SURROUNDING AREA.
8. COORDINATE EXACT LOCATION OF PIPING WITH STRUCTURAL MEMBERS, LIGHTS, REFLECTED CEILING PLANS, CABLE TRAY, ELECTRICAL CONDUITS, DUCTWORK, MECHANICAL AND PLUMBING PIPING, AND ALL OTHER TRADES.
9. FIRE SPRINKLERS TO BE INSTALLED TO MEET NFPA-13-CURRENT EDITION REQUIREMENTS.
10. FIRE SPRINKLERS ARE REQUIRED TO BE LOCATED CENTERED IN THE ACT TILES.
11. SHOP DRAWINGS, CALCULATIONS AND MATERIAL SUBMITTALS SHALL BE SUBMITTED TO THE ENGINEER AND OWNER PRIOR TO SUBMITTAL TO THE FIRE MARSHALL.
12. A WARRANTY, FOR PRODUCT AND SYSTEM OPERATION SHALL BE PROVIDED FOR ONE YEAR, UPON SYSTEM ACTIVATION AND ACCEPTANCE.

bhd ARCHITECTS
www.bhdarchitects.com
Phone 801.571.0010
Fax 801.571.0303
Toll Free 888.571.0010
65 East Wadsworth Park Drive
Suite 205 Draper, Utah 84020

PROFESSIONAL ENGINEER
No. 5277290-2202
MICHAEL L. CHRISTENSEN
05/29/2025
STATE OF UTAH

RMC-F, LLC

338 North 3550 West
Layton, UT 84041
801-496-8244

THE CHURCH OF JESUS CHRIST OF LATTER-DAY SAINTS

Nibley 6 & Nibley UT West Stake

Approx. 3410 South 1200 West Nibley, Utah
41.672809 -111.866775

BHD #: 2403
County Parcel: 03:050:0016
Plan Series: Heritage 24
Owner #: 514-4728
Date: 29 May 2025

Drawing Issue and Revision Schedule

#	Date	Description
1	9 Apr 2025	100% Owner Review Drawings

Fire Protection Legend and Notes

FS001

5/29/2025 11:49:42 AM

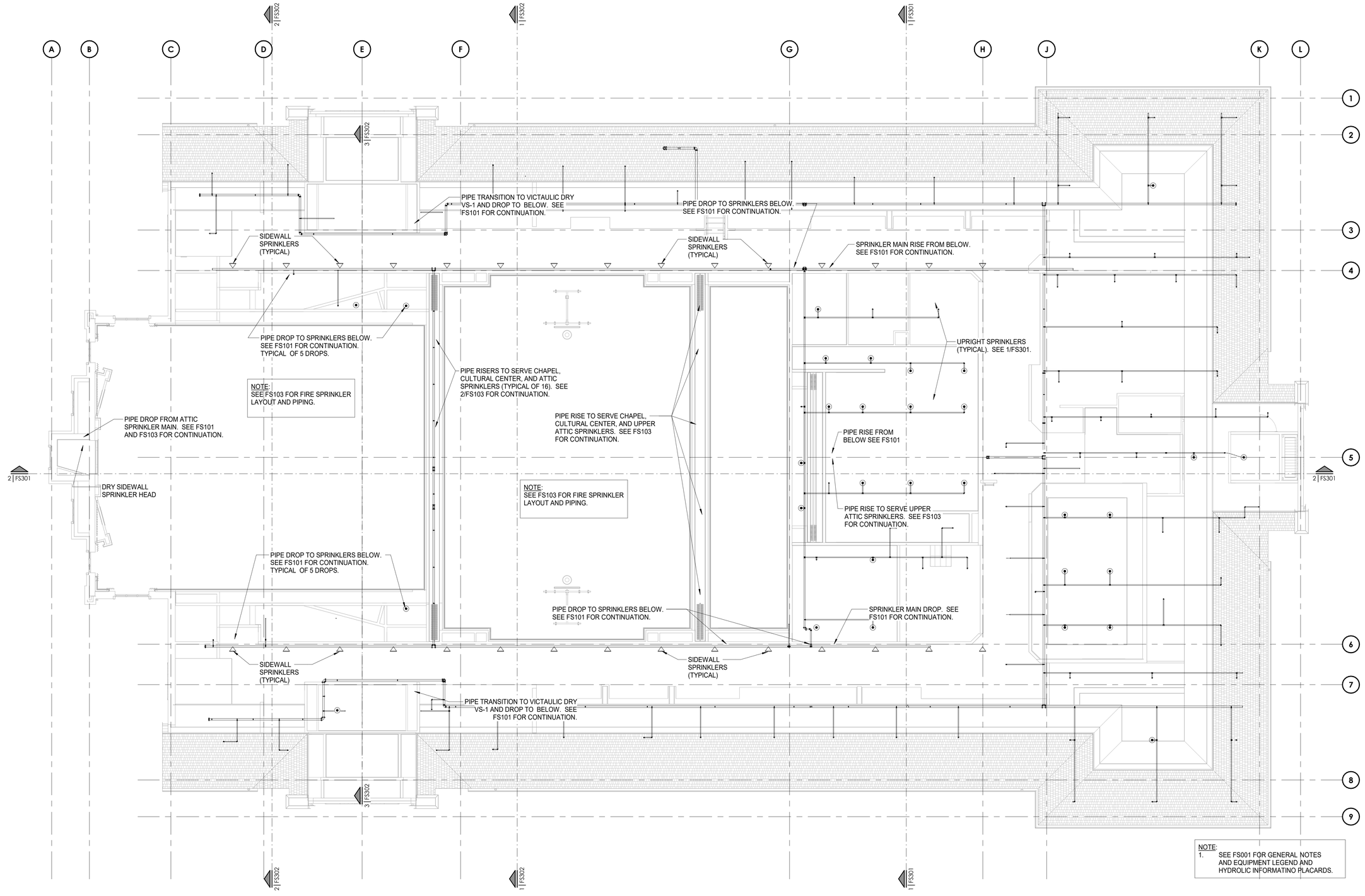

1 EQUIPMENT PLATFORM
1/8" = 1'-0"

5/29/2025 11:49:49 AM

bhd ARCHITECTS
www.bhdarchitects.com
Phone 801.571.0010
Fax 801.571.0303
Toll Free 888.571.0010
65 East Wadsworth Park Drive
Suite 205 Draper, Utah 84020

PROFESSIONAL ENGINEER
No. 9277290-2202
MICHAEL L. CHRISTENSEN
05/29/2025
STATE OF UTAH

RMC-F, LLC

338 North 3550 West
Layton, UT 84041
801-696-8244

THE CHURCH OF JESUS CHRIST OF LATTER-DAY SAINTS

Nibley 6 & Nibley UT West Stake

Approx. 3410 South 1200 West, Nibley, Utah
41.672809, -111.860775

BHD #: 2403
County Parcel: 03:050:0016
Plan Series: Heritage 24
Owner #: 514-4728
Date: 29 May 2025

Drawing Issue and Revision Schedule

#	Date	Description
1	9 Apr 2025	100% Owner Review Drawings

Fire Protection Equipment Platform Floor Plan

FS102

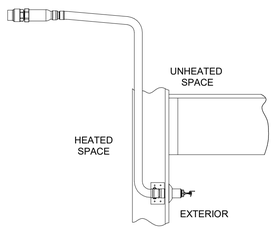

7 VS-FLEX DRY SPRINKLER, SIDEWALL
NOT TO SCALE

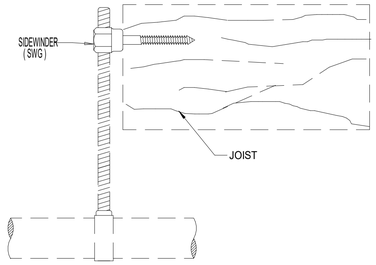

4 HANGER DETAIL (4)
NOT TO SCALE

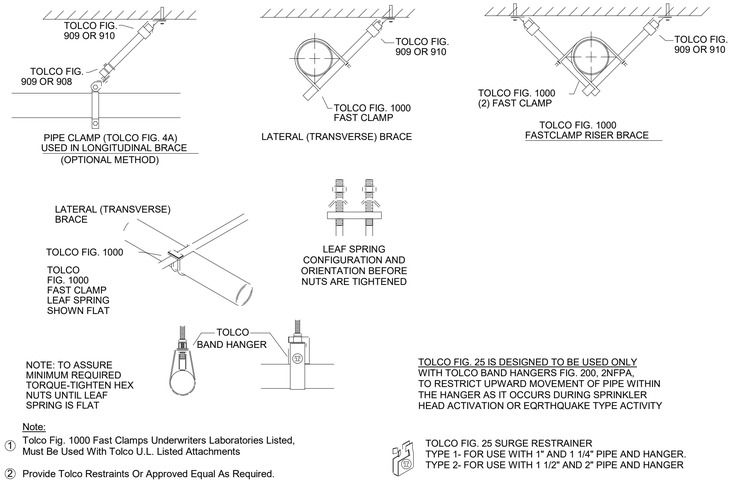

Note:
① Tolco Fig. 1000 Fast Clamps Underwriters Laboratories Listed, Must Be Used With Tolco U.L. Listed Attachments
② Provide Tolco Restraints Or Approved Equal As Required.

1 SEISMIC RESTRAINT COMPONENTS (TYPICAL APPLICATIONS)
NOT TO SCALE

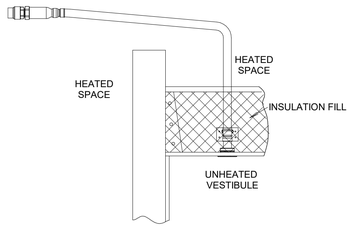

8 VS-FLEX DRY SPRINKLER, CONCEALED PENDENT
NOT TO SCALE

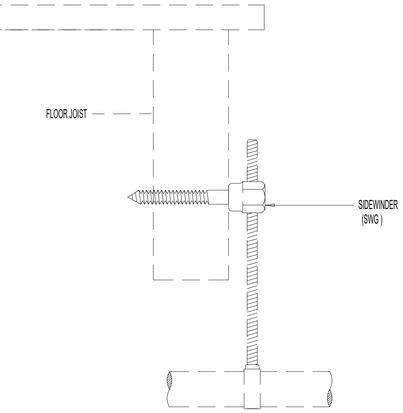

5 HANGER DETAIL (5)
NOT TO SCALE

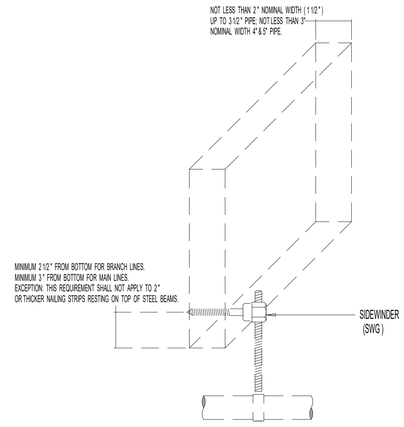

2 HANGER DETAIL (2)
NOT TO SCALE

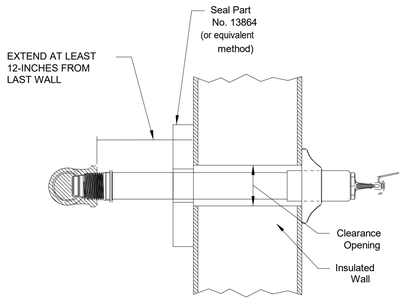

Dry Sprinkler Seal on the Exterior of the Wall

9 DRY SPRINKLER SEAL
NOT TO SCALE

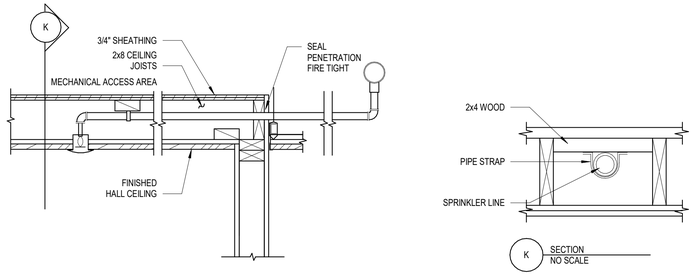

6 FIRE SPRINKLER CORRIDOR SECTION
NOT TO SCALE

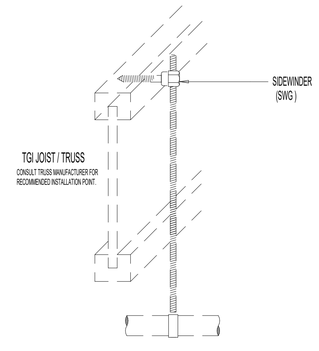

3 HANGER DETAIL (3)
NOT TO SCALE

bhd ARCHITECTS
www.bhdarchitects.com
Phone 801.571.0010
Fax 801.571.0303
Toll Free 888.571.0010
65 East Wadsworth Park Drive
Suite 205 Draper, Utah 84020

PROFESSIONAL ENGINEER
No. 5277290-2202
MICHAEL L. CHRISTENSEN
05/29/2025
STATE OF UTAH

RMC-F, LLC
338 North 3550 West
Layton, UT 84041
801-696-8244

THE CHURCH OF
JESUS CHRIST
OF LATTER-DAY SAINTS

**Nibley 6 &
Nibley UT West Stake**

Approx. 3410 South 1200 West, Nibley, Utah
41.670809, -111.866775

Date: 29 May 2025
BHD #: 2403
County Parcel: 03:050:0016
Plan Series: Heritage 24
Owner #: 514-4728

Drawing Issue and Revision Schedule

#	Date	Description
1	9 Apr 2025	100% Owner Review Drawings

Fire Protection Details

FS502

5/29/2025 11:49:54 AM

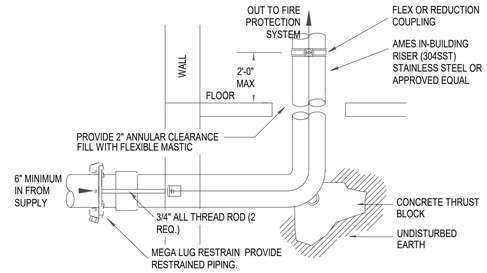

1 STAINLESS STEEL FLANGED SPIGOT DETAIL

NOT TO SCALE

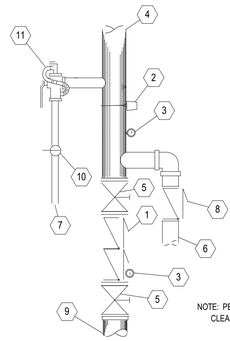

1. BACKFLOW PREVENTION DEVICE DOUBLE CHECK VALVE ASSEMBLY.
2. FLOW SWITCH TO HORN STROBE ALARM, WIRING BY DIVISION 28.
3. WATER PRESSURE GAGE.
4. TO WET SYSTEM.
5. CONTROL VALVE WITH TAMPER SWITCH, WIRING BY DIVISION 28.
6. TO FIRE DEPARTMENT CONNECTION.
7. MAIN DRAIN PIPED TO EXTERIOR.
8. CHECK VALVE.
9. STAINLESS STEEL UNDERGROUND SUPPLY FIRE LINE. PROVIDE RESTRAINTS, FLEXIBLE COUPLINGS, AND ANNULAR CLEARANCE AS REQUIRED BY NFPA.
10. MAINTENANCE VALVE.
11. INSPECTORS TEST WITH PRESSURE RELIEF VALVE.

NOTE: PER UTAH AMENDMENT THERE SHALL BE 12-INCHES CLEAR AROUND AND 36-INCHES CLEAR IN FRONT.

2 FIRE SPRINKLER RISER ASSEMBLY (WITH BACKFLOW)

NOT TO SCALE

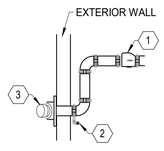

DETAIL KEYED NOTES:

1. SWING CHECK VALVE
2. 1/2" AUTOMATIC BALL DRIP VALVE
3. OUT TO FIRE DEPARTMENT CONNECTION WITH GALVANIZED SCH 40 PIPING- PROVIDE BALL DRIP WHEN TRAPPING PIPE. SIZE CONNECTION AS REQUIRED. NOTE: PIPE FDC TO REMOTE LOCATION WHEN REQUIRED BY FIRE MARSHAL.

3 FIRE DEPARTMENT CONNECTION DETAIL

NOT TO SCALE

bhd ARCHITECTS
www.bhdarchitects.com
Phone 801.571.0010
Fax 801.571.0303
Toll Free 888.571.0010
65 East Wadsworth Park Drive
Suite 205 Draper, Utah 84020

PROFESSIONAL ENGINEER
No. 5277290-2202
MICHAEL L. CHRISTENSEN
05/29/2025
STATE OF UTAH

RMC-F, LLC

338 North 3550 West
Layton, UT 84041
801-696-8244

THE CHURCH OF JESUS CHRIST OF LATTER-DAY SAINTS

Nibley 6 &
Nibley UT West Stake

Approx. 3410 South 1200 West Nibley, Utah
41.670809, -111.860775

BHD #: 2403
County Parcel: 03050:0016
Plan Series: Heritage 24
Owner #: 514-4728
Date: 29 May 2025

Drawing Issue and Revision Schedule

#	Date	Description
1	9 Apr 2025	100% Owner Review Drawings

Fire Protection Details

FS501

5/29/2025 11:49:54 AM

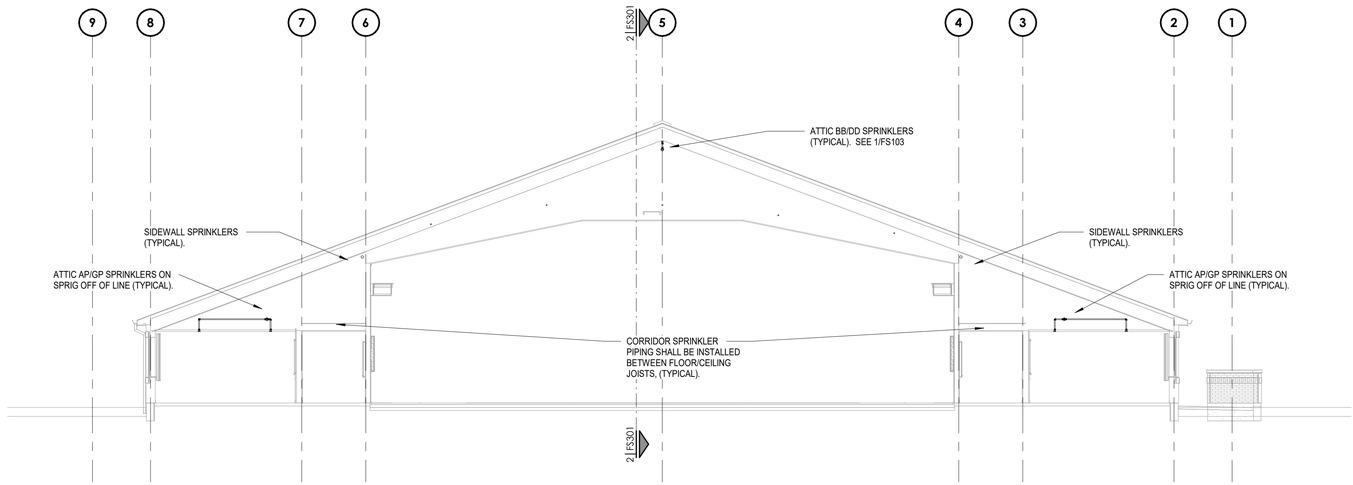

1 Building Section 3
1/8" = 1'-0"

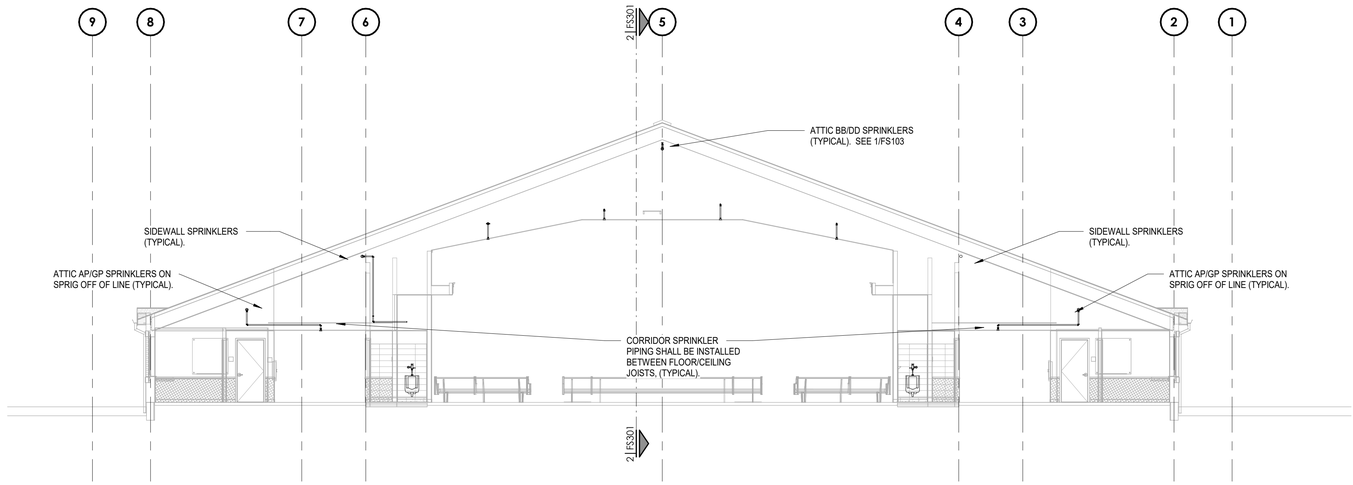

2 Building Section 4
1/8" = 1'-0"

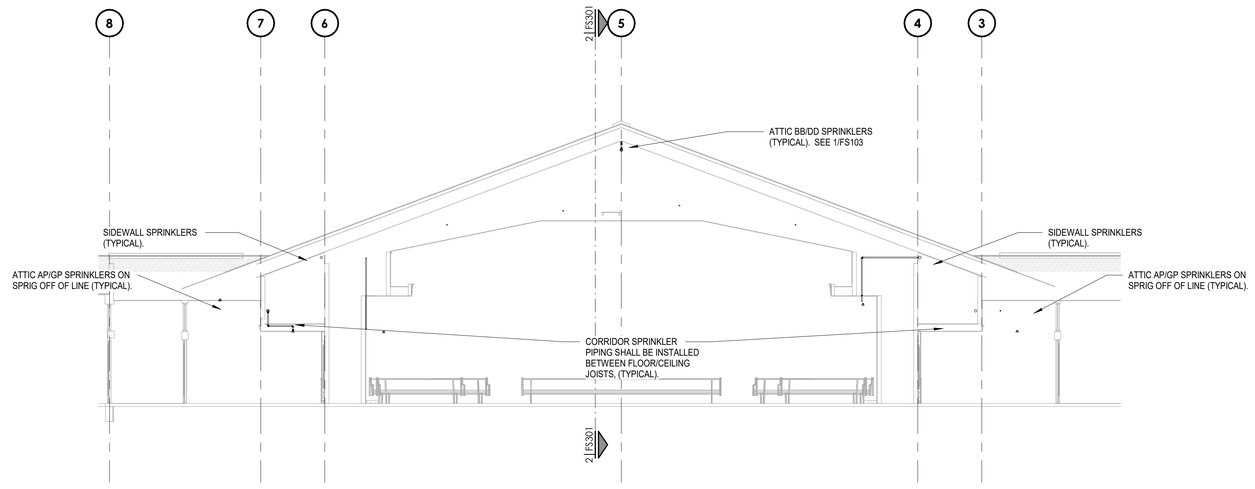

3 Building Section 5
1/8" = 1'-0"

5/29/2025 11:49:54 AM

bhd ARCHITECTS
www.bhdarchitects.com
Phone 801.571.0010
Fax 801.571.0303
Toll Free 888.571.0010
65 East Wadsworth Park Drive
Suite 205 Draper, Utah 84020

PROFESSIONAL ENGINEER
No. 5277290-2202
MICHAEL L. CHRISTENSEN
05/29/2025
STATE OF UTAH

RMC-F, LLC

338 North 3550 West
Layton, UT 84041
801-696-8244

THE CHURCH OF
JESUS CHRIST
OF LATTER-DAY SAINTS

Nibley 6 &
Nibley UT West Stake

Approx. 3410 South 1200 West, Nibley, Utah
41.670809, -111.860775

Date: 29 May 2025
BHD #: 2403
County Parcel: 03:050:0016
Plan Series: Heritage 24
Owner #: 514-4728

Drawing Issue and Revision Schedule

#	Date	Description
1	9 Apr 2025	100% Owner Review Drawings

Fire Protection Sections

FS302

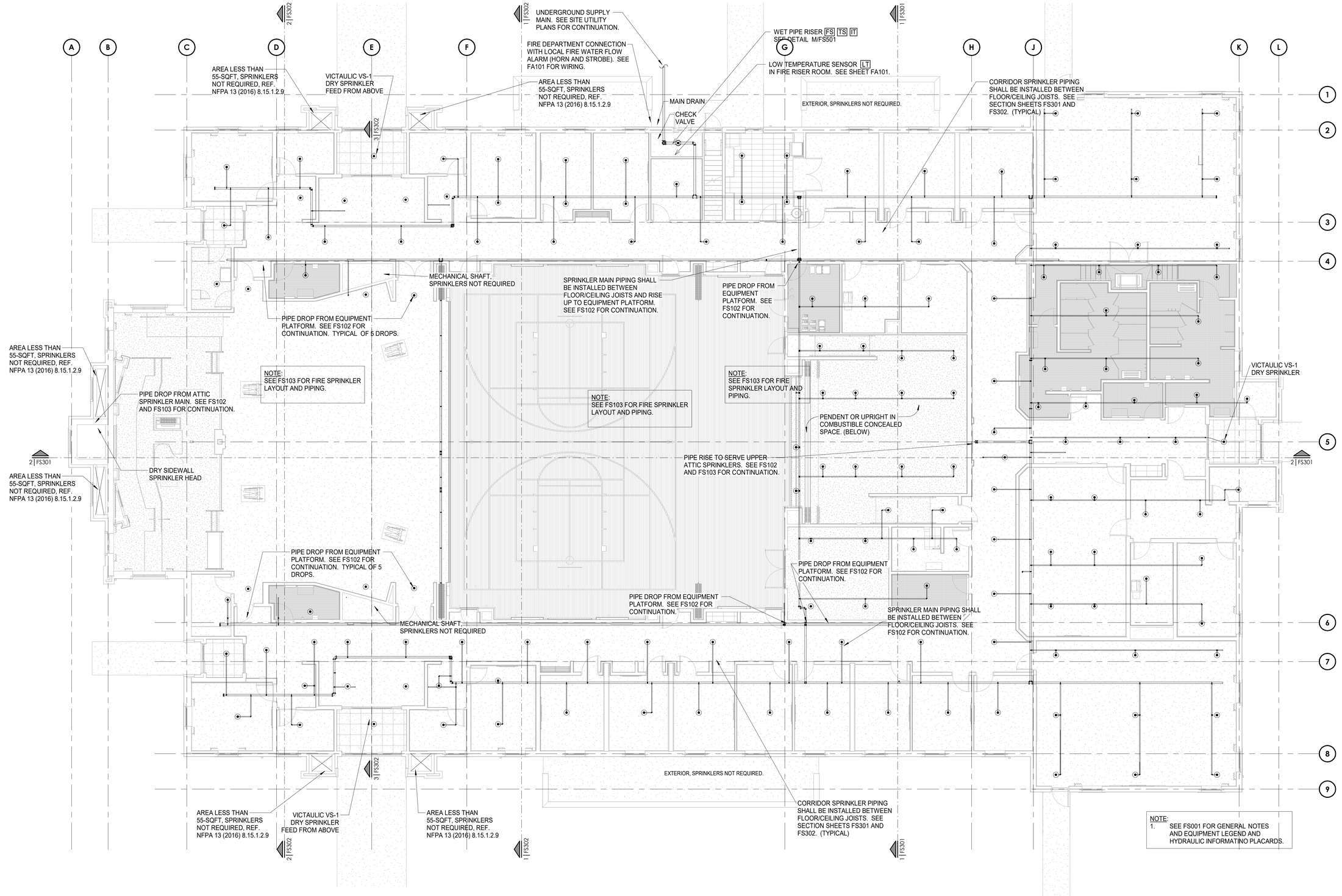

1 FIRE PROTECTION FLOOR PLAN
1/8" = 1'-0"

5/29/2025 11:49:46 AM

bhd ARCHITECTS
www.bhdarchitects.com
Phone 801.571.0010
Fax 801.571.0303
Toll Free 888.571.0010
65 East Wadsworth Park Drive
Suite 205 Draper, Utah 84020

PROFESSIONAL ENGINEER
No. 9277290-2202
MICHAEL L. CHRISTENSEN
05/29/2025
STATE OF UTAH

RMC-F, LLC

338 North 3550 West
Layton, UT 84041
801-496-8244

THE CHURCH OF
JESUS CHRIST
OF LATTER-DAY SAINTS

**Nibley 6 &
Nibley UT West Stake**

Approx. 3410 South 1200 West, Nibley, Utah
41.672809, -111.860775

Owner #: 514-4728
Plan Series: Heritage 24
BHD #: 2403
County Parcel: 03:050:0016
Date: 29 May 2025

Drawing Issue and Revision Schedule

#	Date	Description
1	9 Apr 2025	100% Owner Review Drawings

Fire Protection Floor Plan

FS101

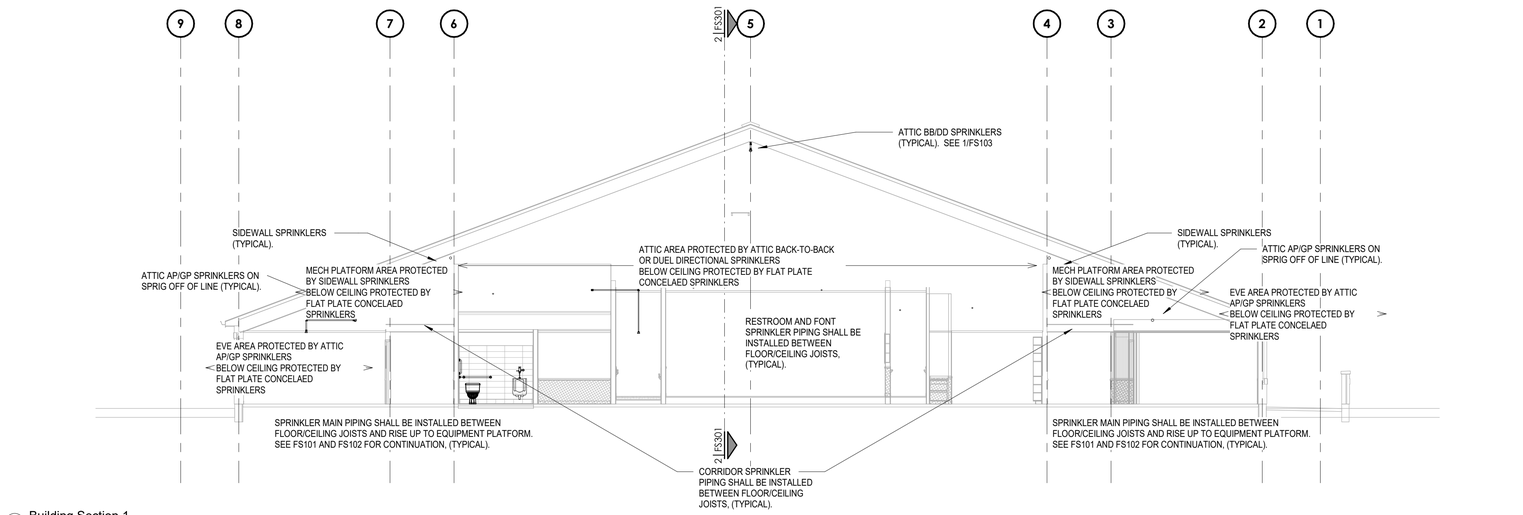

1 Building Section 1
1/8" = 1'-0"

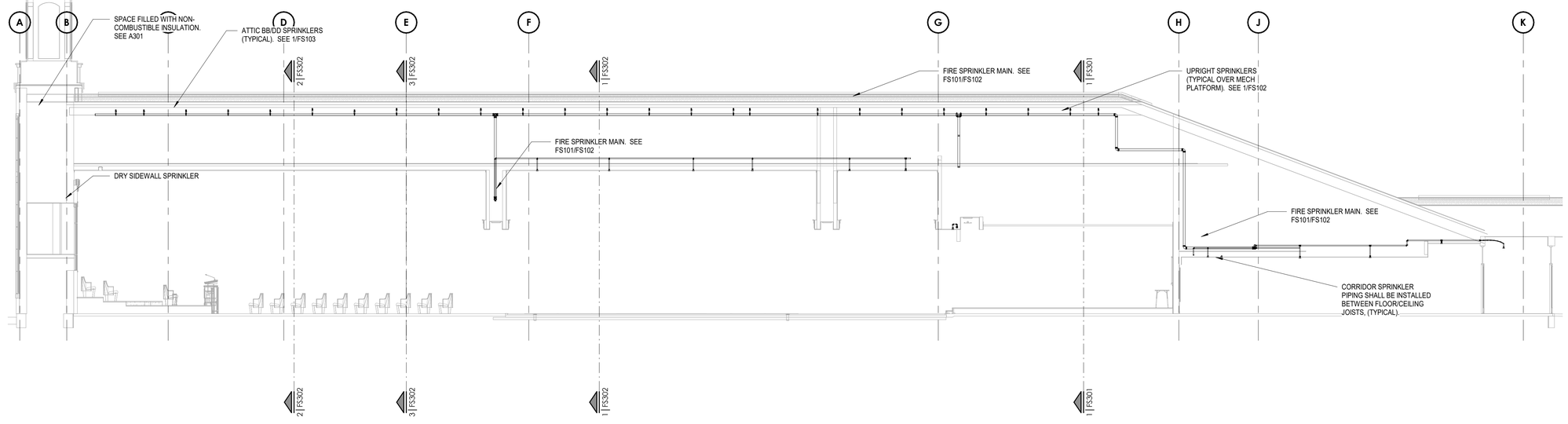

2 Building Section 2
1/8" = 1'-0"

5/29/2025 11:49:53 AM

bhd ARCHITECTS
www.bhdarchitects.com
Phone 801.571.0010
Fax 801.571.0303
Toll Free 888.571.0010
65 East Wadsworth Park Drive
Suite 205 Draper, Utah 84020

PROFESSIONAL ENGINEER
No. 5227290-2202
MICHAEL L. CHRISTENSEN
05/29/2025
STATE OF UTAH

RMC-F, LLC

338 North 3550 West
Layton, UT 84041
801-496-8244

THE CHURCH OF
JESUS CHRIST
OF LATTER-DAY SAINTS

Nibley 6 &
Nibley UT West Stake

Approx. 3410 South 1200 West, Nibley, Utah
41.672809, -111.846775

BHD #: 2403
County Parcel: 03:050:0016
Plan Series: Heritage 24
Owner #: 514-4728
Date: 29 May 2025

Drawing Issue and Revision Schedule

#	Date	Description
1	9 Apr 2025	100% Owner Review Drawings

Fire Protection Sections

FS301

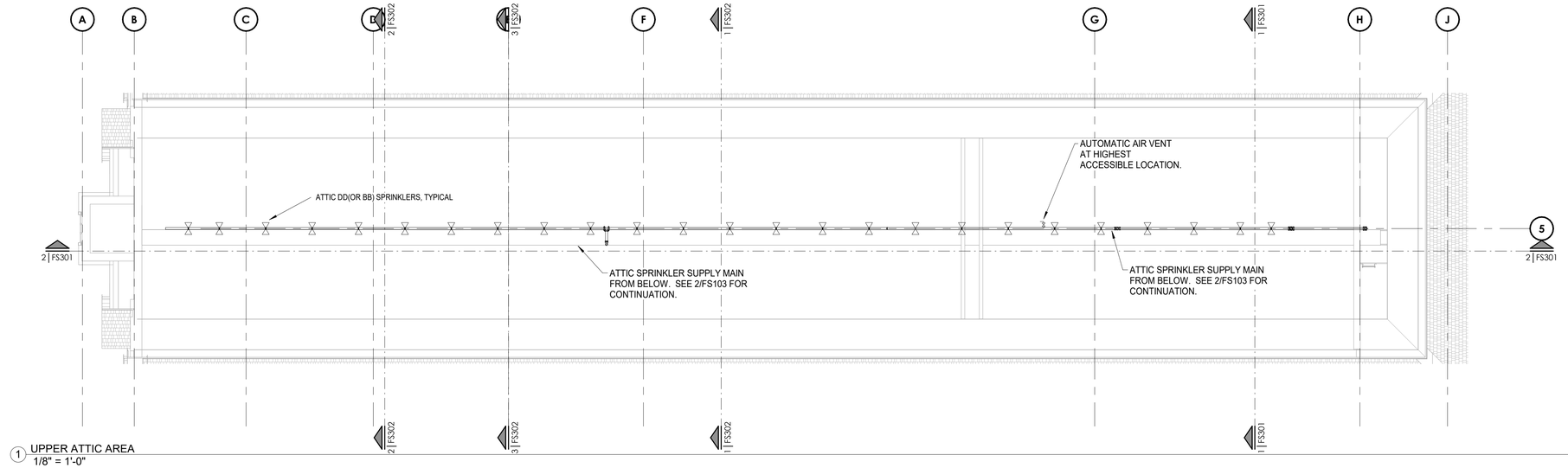

1 UPPER ATTIC AREA
1/8" = 1'-0"

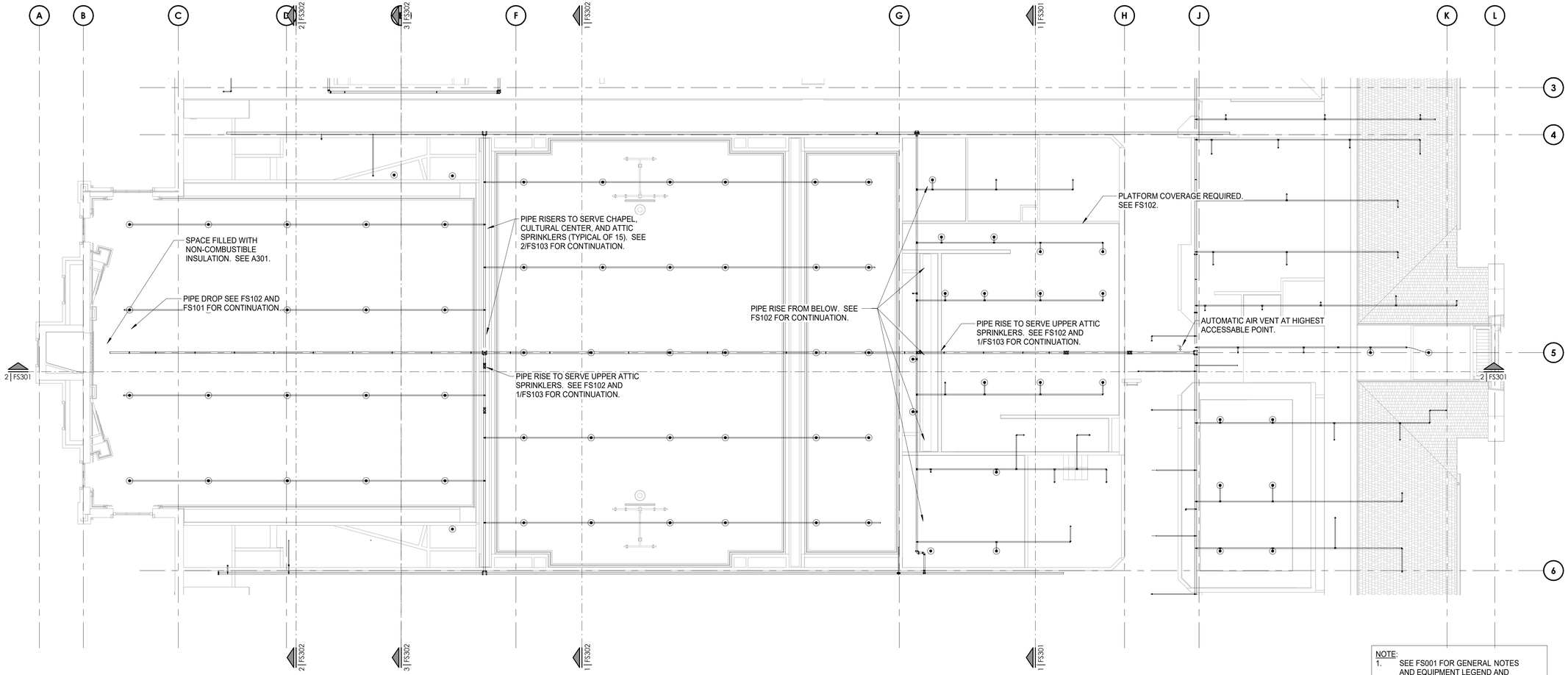

2 ATTIC AREA
1/8" = 1'-0"

NOTE:
1. SEE FS001 FOR GENERAL NOTES AND EQUIPMENT LEGEND AND HYDRAULIC INFORMATINO PLACARDS.
2. IF ATTIC AP SPRINKLERS ARE NOT REQUIRED FOR COVERAGE BASED ON MANUFACTURE ATTIC SPACING CRITERIA AND MAINTAING COVERAGE PER NFPA 13 THEY MAY BE OMITTED .

bhd ARCHITECTS
www.bhdarchitects.com
Phone 801.571.0010
Fax 801.571.0303
Toll Free 888.571.0010
65 East Wadsworth Park Drive
Suite 205 Draper, Utah 84020

PROFESSIONAL ENGINEER
No. 9277290-2202
MICHAEL L. CHRISTENSEN
05/29/2025
STATE OF UTAH

RMC-F, LLC

338 North 3550 West
Layton, UT 84041
801-696-8244

THE CHURCH OF
JESUS CHRIST
OF LATTER-DAY SAINTS

**Nibley 6 &
Nibley UT West Stake**

Approx. 3410 South 1200 West, Nibley, Utah
41.670809, -111.860775

Owner #: 514-4728
Plan Series: Heritage 24
County Parcel: 03:050:0016
BHD #: 2403
Date: 29 May 2025

Drawing Issue and Revision Schedule

#	Date	Description
1	9 Apr 2025	100% Owner Review Drawings

**Fire Protection
Attic Floor Plan**

FS103

5/29/2025 11:49:52 AM

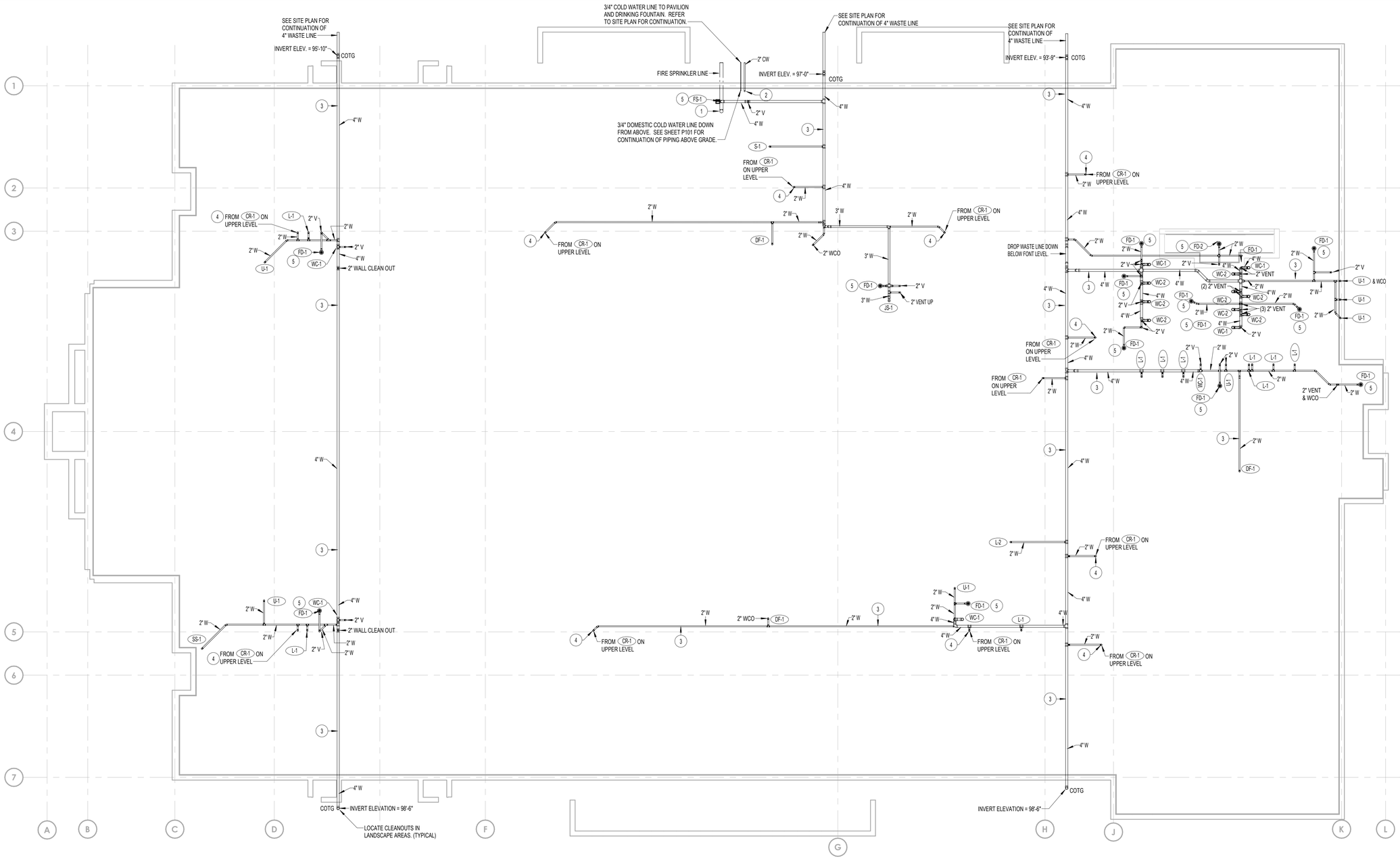

FOUNDATION PLUMBING PLAN

SCALE: 1/8" = 1'-0"

GENERAL NOTES:

A- ALL PLUMBING SHALL COMPLY WITH THE MOST STRINGENT OF APPLICABLE CODES, ORDINANCES, OR THE SPECIFICATIONS.

B- ALL FIXTURES SHALL BE PROPERLY AND INDEPENDENTLY VENTED TO THE ATMOSPHERE.

C- REFER TO MECHANICAL SHEETS FOR LOCATIONS OF MECHANICAL EQUIPMENT AND DUCTWORK. COORDINATE ALL WORK TO FIT AVAILABLE SPACE.

D- GAS LINE TO BE RUN ON EQUIPMENT PLATFORM LEVEL UNLESS OTHERWISE NOTED OR SHOWN.

E- WATER PIPING AND VENT PIPING SHALL BE RUN ON EQUIPMENT PLATFORM LEVEL UNLESS OTHERWISE NOTED OR SHOWN.

F- FOR INDIVIDUAL LINE SIZES TO FIXTURES, SEE PLUMBING FIXTURE SCHEDULE ON SHEET P601.

G- DO NOT RUN PLUMBING PIPES IN SHEAR WALLS UNLESS NOTED OTHERWISE.

H- MINIMUM WASTE PIPING BELOW CONCRETE FLOORS SHALL BE 2".

J- DUE TO CLOSE PROXIMITY OF WATER, VENT AND DRAIN PIPING AS WELL AS DUCTWORK, EQUIPMENT, AND HVAC PIPING, THE PLUMBING CONTRACTOR SHALL COORDINATE THE INSTALLATION WITH THE MECHANICAL AND SHEET METAL CONTRACTORS.

K- FOR PIPE SIZES NOT SHOWN ON THIS SHEET, REFER TO LARGE SCALE PLANS, PIPING SCHEMATICS ON SHEET P401 AND FIXTURE SCHEDULE ON SHEET P601.

L- REFER TO MECHANICAL SHEETS FOR ANY ADDITIONAL WORK.

M- COORDINATE LOCATION OF EACH DOMESTIC WATER ISOLATION VALVE WITH MECHANICAL AND SHEET METAL INSTALLATION TO PROVIDE REQUIRED ACCESS AND VISIBILITY TO VALVE.

N- CONTRACTOR SHALL RUN ALL WATER LINES WITHIN BUILDING INSULATION ENVELOPE.

O- LEAVE 6" CLEAR SPACE ON EQUIPMENT DECK BETWEEN FURNACES, DUCTWORK, ETC. AND HIGH WALL FOR GAS PIPING, CONDUIT, DRAINS, ETC. RACK ALL PIPING AND CONDUIT ON WALL WITH UNISTRUT SUPPORTS.

P- DO NOT RUN PIPES ON PLATFORM FLOOR THAT WILL IMPEDE WALKWAYS.

PLAN NOTES:

1. FIRE WATER LINE TO BUILDING. RISE UP THRU FLOOR AND CONNECT TO FIRE RISER AND ALARM VALVE. REFER TO FIRE SPRINKLER DRAWINGS.
2. 2" DOMESTIC COLD WATER SERVICE LINE TO BUILDING. RISE UP THRU FLOOR AND CONNECT TO PRV STATION ABOVE. REFER TO WATER PRV DETAIL F/ P501.
3. ALL WASTE LINES BELOW FLOORS TO BE GRADED AT 1/4" SLOPE PER FOOT. PROVIDE CLEAN OUTS IN LINES AT ALL CHANGES IN DIRECTION AND AT 100'-0" MAXIMUM INTERVALS.
4. CONDENSATE RECEIVER LOCATED ON EQUIPMENT PLATFORM LEVEL. RISE 2" WASTE LINE UP IN WALL ABOVE WITH CLEANOUT AT 12" ABOVE FLOOR. REFER TO SHEET P101 FOR CONTINUATION OF PIPING ABOVE.
5. PROVIDE TRAP SEAL WITH FLOOR DRAIN OR FLOOR SINK. TRAP SEAL TO BE UPC APPROVED. SEE DETAIL C/P502.

bhd ARCHITECTS
www.bhdarchitects.com
Phone 801.571.0010
Fax 801.571.0303
Toll Free 888.571.0010
65 East Wadsworth Park Drive
Suite 205 Draper, Utah 84020

LICENSED PROFESSIONAL ENGINEER — DAVID L. HANSEN — May 28,2025 — STATE OF UTAH

Engineered Systems Associates
1355 EAST CENTER
POCATELLO, IDAHO 83201
PHONE: (208) 233-0501
FAX: (208) 233-0529
EMAIL:esa@engsystems.com
ESA JOB NUMBER: 25042

THE CHURCH OF JESUS CHRIST OF LATTER-DAY SAINTS

Nibley 6 & Nibley UT West Stake

Approx. 3410 South 1200 West, Nibley, Utah
41.670809, -111.860775

BHD #: 2403
County Parcel: 03:050:0016
Plan Series: Heritage 24
Owner #: 514-4728
Date: 29 Mar 2025

Drawing Issue and Revision Schedule

#	Date	Description
1	29 May 2025	Bid Documents

Foundation Plumbing Plan

P100

5/29/2025 8:49:24 AM

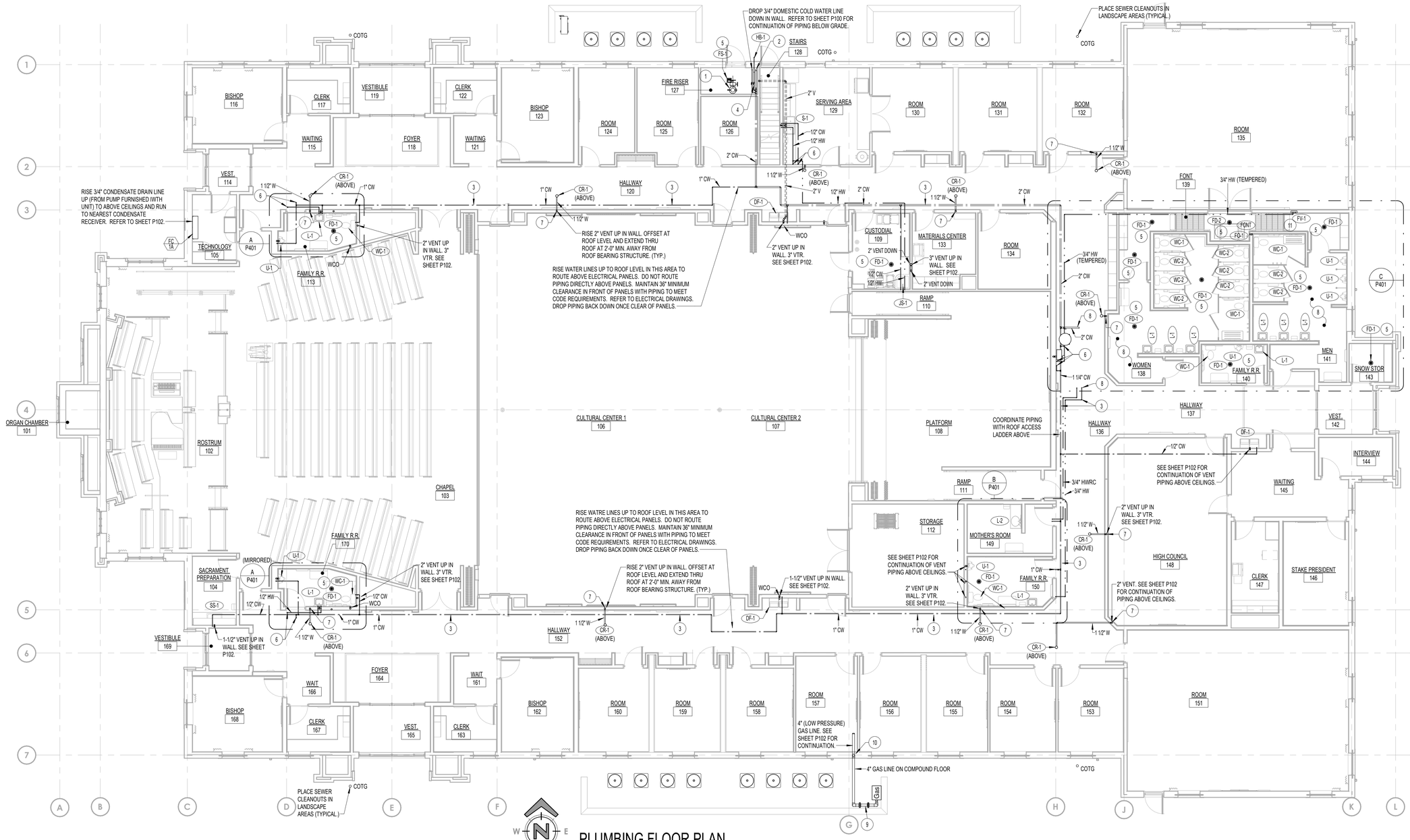

PLUMBING FLOOR PLAN

SCALE: 1/8" = 1'-0"

LEGEND

SYMBOL OR ABBREVIATION	MEANING	SYMBOL OR ABBREVIATION	MEANING
HOT WATER LINE (HW)	———	VENT THRU ROOF	VTR
HOT WATER RECIRC. (HWRC)	———	WALL CLEANOUT	WCO
COLD WATER LINE (CW)	———	CLEANOUT	CO
VENT LINE	- - - - - -	CLEANOUT TO GRADE	COTG
WASTE LINE	———	FLOOR CLEANOUT	FCO
GAS LINE	——— G ———	BALL VALVE	
CONDENSATE DRAIN	——— CD ———	UNION	

GENERAL NOTES:

A- ALL PLUMBING SHALL COMPLY WITH THE MOST STRINGENT OF APPLICABLE CODES, ORDINANCES, OR THE SPECIFICATIONS.

B- ALL FIXTURES SHALL BE PROPERLY VENTED TO THE ATMOSPHERE.

C- REFER TO MECHANICAL SHEETS FOR LOCATIONS OF MECHANICAL EQUIPMENT AND DUCTWORK. COORDINATE ALL WORK TO FIT AVAILABLE SPACE.

D- GAS LINE TO BE RUN ON EQUIPMENT PLATFORM LEVEL UNLESS OTHERWISE NOTED OR SHOWN.

E- WATER PIPING AND VENT PIPING SHALL BE RUN ON EQUIPMENT PLATFORM LEVEL UNLESS OTHERWISE NOTED OR SHOWN.

F- FOR INDIVIDUAL LINE SIZES TO FIXTURES, SEE PLUMBING FIXTURE SCHEDULE ON SHEET P601.

G- DO NOT RUN PLUMBING PIPES IN SHEAR WALLS UNLESS NOTED OTHERWISE.

H- MINIMUM WASTE PIPING BELOW CONCRETE FLOORS SHALL BE 2".

J- DUE TO CLOSE PROXIMITY OF WATER, VENT AND DRAIN PIPING AS WELL AS DUCTWORK, EQUIPMENT, AND HVAC PIPING, THE PLUMBING CONTRACTOR SHALL COORDINATE THE INSTALLATION WITH THE MECHANICAL AND SHEET METAL CONTRACTORS.

K- FOR PIPE SIZES NOT SHOWN ON THIS SHEET, REFER TO LARGE SCALE PLANS, PIPING SCHEMATICS ON SHEET P401 AND FIXTURE SCHEDULE ON SHEET P601.

L- REFER TO MECHANICAL SHEETS FOR ANY ADDITIONAL WORK.

M- COORDINATE LOCATION OF EACH DOMESTIC WATER ISOLATION VALVE WITH MECHANICAL AND SHEET METAL INSTALLATION TO PROVIDE REQUIRED ACCESS AND VISIBILITY TO VALVE.

N- CONTRACTOR SHALL RUN ALL WATER LINES WITHIN BUILDING INSULATION ENVELOPE.

O- LEAVE 6" CLEAR SPACE ON EQUIPMENT DECK BETWEEN FURNACES, DUCTWORK, ETC. AND HIGH WALL FOR GAS PIPING, CONDUIT, DRAINS, ETC. RACK ALL PIPING AND CONDUIT ON WALL WITH UNISTRUT SUPPORTS.

P- DO NOT RUN PIPES ON PLATFORM FLOOR THAT WILL IMPEDE WALKWAYS.

PLAN NOTES:

1. RISE FIRE WATER LINE UP THRU FLOOR AND CONNECT TO FIRE RISER AND ALARM VALVE. REFER TO FIRE SPRINKLER DRAWINGS.
2. RISE 2" DOMESTIC COLD WATER SERVICE LINE UP THRU FLOOR AND CONNECT TO PRV STATION ABOVE. REFER TO WATER PRV DETAIL ON SHEET F/P501.
3. DOMESTIC WATER PIPING TO BE RUN ABOVE EQUIPMENT PLATFORM ABOVE. PIPING SHOWN HERE FOR CLARITY. PIPING RUNS ARE SHOWN HORIZONTALLY FOR CLARITY. PIPING SHALL BE STACKED ON WALL. REFER TO GENERAL NOTE #O.
4. PROVIDE SHUT-OFF VALVE IN 3/4" COLD WATER LINE FEEDING EXTERIOR HOSE BIBB. VALVE TO BE LOCATED IN FIRE RISER ROOM AND TO BE ACCESSIBLE. COORDINATE WITH EQUIPMENT AND DUCTWORK. (REFER TO MECHANICAL DRAWINGS-SHEET M101.)
5. PROVIDE TRAP SEAL WITH FLOOR DRAIN OR FLOOR SINK. TRAP SEAL TO BE UPC APPROVED. SEE DETAIL C/P502.
6. CONNECT 3/4" HOT AND COLD WATER LINES TO WATER HEATER LOCATED ON EQUIPMENT PLATFORM. REFER TO SHEET P102.
7. CONDENSATE RECEIVER LOCATED ON EQUIPMENT PLATFORM LEVEL. DROP 2" WASTE LINE DOWN IN WALL WITH CLEANOUT AT 12" ABOVE MAIN LEVEL FLOOR. REFER TO SHEET P102 FOR VENT PIPING ABOVE. REFER TO DETAIL A/P502 FOR TYPICAL INSTALLATION OF DRAIN.
8. REFER TO LARGE SCALE PLANS ON SHEET P401 FOR CONTINUATION OF WATER AND VENT PIPING ABOVE TOILET ROOMS.
9. GAS METER BY LOCAL GAS COMPANY. SIZE METER TO 2,300,000 BTU CAPACITY WITH LOW (0.5 PSI) DISCHARGE PRESSURE. REFER TO GAS LOAD CALCULATIONS ON SHEET P601. RISE 4" (LOW PRESSURE) GAS LINE ABOVE METER AND INSTALL SEISMIC GAS VALVE. REFER TO DETAIL A/P501. PAINT EXTERIOR PIPE WITH RUST INHIBITIVE PAINT TO MATCH METER.
10. RISE 4" (0.5 PSI) GAS LINE UP INSIDE EXTERIOR WALL CAVITY TO ABOVE CEILINGS. FIELD VERIFY GAS LINE LOCATION WITH BUILDING STRUCTURE AND ELECTRICAL CONDUITS. REFER TO SHEET P102 FOR CONTINUATION OF GAS PIPING TO EQUIPMENT LOCATED ON EQUIPMENT PLATFORM ABOVE.
11. REFER TO DETAIL E/P501 FOR FONT FILL VALVE INSTALLATION.

bhd ARCHITECTS
www.bhdarchitects.com
Phone 801.571.0010
Fax 801.571.0303
Toll Free 888.571.0010
65 East Wadsworth Park Drive
Suite 205 Draper, Utah 84020

REGISTERED PROFESSIONAL ENGINEER — DAVID L. HANSEN — May 28,2025 — STATE OF UTAH

Engineered Systems Associates
1355 EAST CENTER
POCATELLO, IDAHO 83201
PHONE: (208) 233-0501
FAX: (208) 233-0529
EMAIL:esa@engsystems.com

ESA JOB NUMBER: 25042

THE CHURCH OF JESUS CHRIST OF LATTER-DAY SAINTS

Nibley 6 & Nibley UT West Stake

Approx. 3410 South 1200 West, Nibley, Utah
41.670809 , -111.860775

Owner #: 514-4728
Plan Series: Heritage 24
County Parcel: 03:050:0016
BHD #: 2403
Date: 29 Mar 2025

Drawing Issue and Revision Schedule

#	Date	Description
1	29 May 2025	Bid Documents

Plumbing Floor Plan

P101

5/29/2025 8:49:29 AM

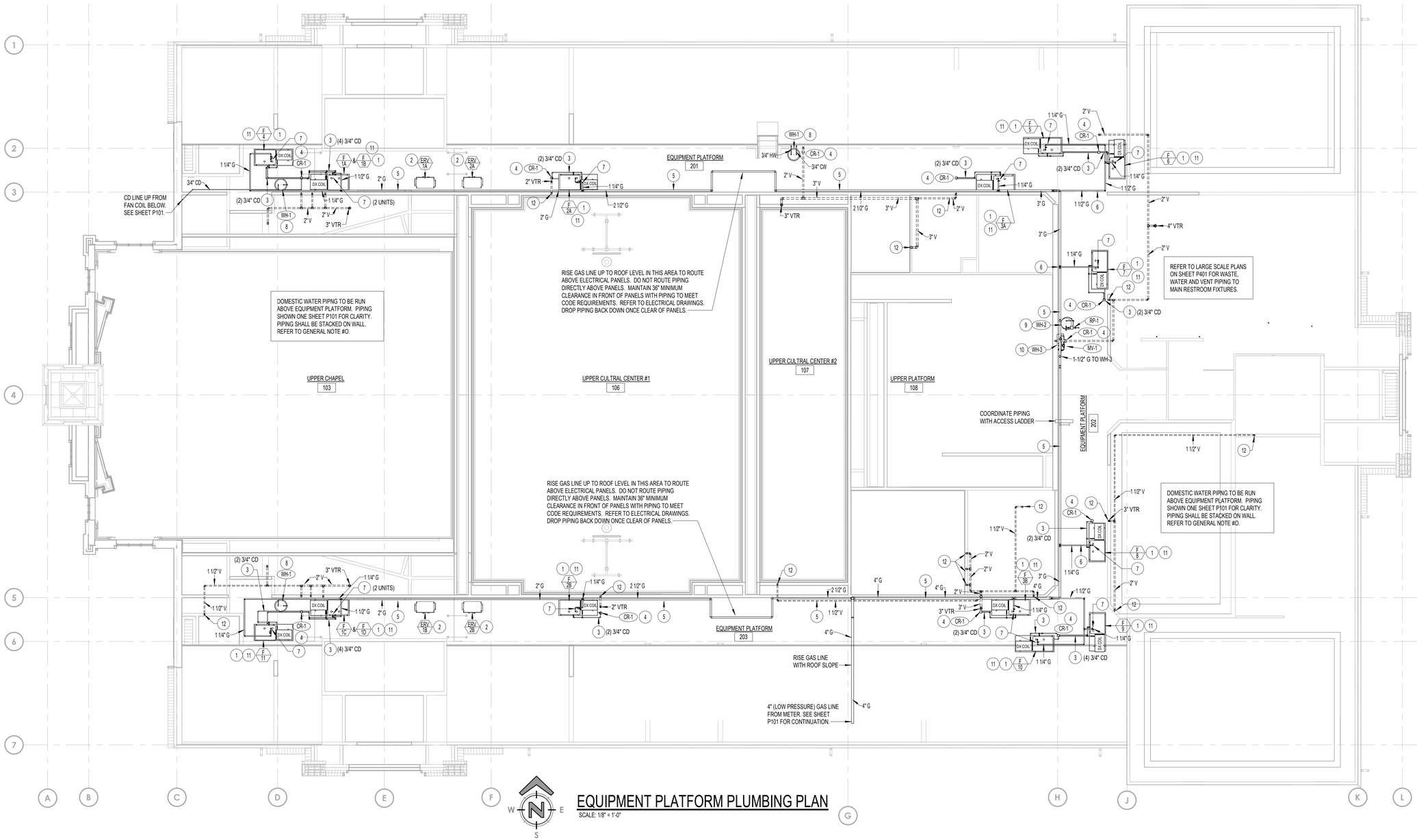

EQUIPMENT PLATFORM PLUMBING PLAN

SCALE: 1/8" = 1'-0"

GENERAL NOTES:

A- ALL PLUMBING SHALL COMPLY WITH THE MOST STRINGENT OF APPLICABLE CODES, ORDINANCES, OR THE SPECIFICATIONS.

B- ALL FIXTURES SHALL BE PROPERLY VENTED TO THE ATMOSPHERE.

C- REFER TO MECHANICAL SHEETS FOR LOCATIONS OF MECHANICAL EQUIPMENT AND DUCTWORK. COORDINATE ALL WORK TO FIT AVAILABLE SPACE.

D- GAS LINE TO BE RUN ON EQUIPMENT PLATFORM LEVEL UNLESS OTHERWISE NOTED OR SHOWN.

E- WATER PIPING AND VENT PIPING SHALL BE RUN ON EQUIPMENT PLATFORM LEVEL UNLESS OTHERWISE NOTED OR SHOWN.

F- FOR INDIVIDUAL LINE SIZES TO FIXTURES, SEE PLUMBING FIXTURE SCHEDULE ON SHEET P601.

G- DO NOT RUN PLUMBING PIPES IN SHEAR WALLS UNLESS NOTED OTHERWISE.

H- MINIMUM WASTE PIPING BELOW CONCRETE FLOORS SHALL BE 2".

J- DUE TO CLOSE PROXIMITY OF WATER, VENT AND DRAIN PIPING AS WELL AS DUCTWORK, EQUIPMENT, AND HVAC PIPING, THE PLUMBING CONTRACTOR SHALL COORDINATE THE INSTALLATION WITH THE MECHANICAL AND SHEET METAL CONTRACTORS.

K- FOR PIPE SIZES NOT SHOWN ON THIS SHEET, REFER TO LARGE SCALE PLANS, PIPING SCHEMATICS ON SHEET P401 AND FIXTURE SCHEDULE ON SHEET P601.

L- REFER TO MECHANICAL SHEETS FOR ANY ADDITIONAL WORK.

M- COORDINATE LOCATION OF EACH DOMESTIC WATER ISOLATION VALVE WITH MECHANICAL AND SHEET METAL INSTALLATION TO PROVIDE REQUIRED ACCESS AND VISIBILITY TO VALVE.

N- CONTRACTOR SHALL RUN ALL WATER LINES WITHIN BUILDING INSULATION ENVELOPE.

O- LEAVE 6" CLEAR SPACE ON EQUIPMENT DECK BETWEEN FURNACES, DUCTWORK, ETC. AND HIGH WALL FOR GAS PIPING, CONDUIT, DRAINS, ETC. RACK ALL PIPING AND CONDUIT ON WALL WITH UNISTRUT SUPPORTS.

P- DO NOT RUN PIPES ON PLATFORM FLOOR THAT WILL IMPEDE WALKWAYS.

PLAN NOTES:

1. FURNACE, DX COOLING COIL AND DRAIN PAN BY MECHANICAL CONTRACTOR. REFER TO MECHANICAL DRAWINGS. PLUMBING CONTRACTOR TO ROUGH-IN AND CONNECT 3/4" CONDENSATE DRAIN LINE FROM DX COIL AND FROM FURNACE. CONNECT SEPARATE 3/4" DRAIN LINE TO DRAIN PAN. RUN (2) SEPARATE DRAIN LINES FROM EQUIPMENT TO NEAREST CR-1 DRAIN HUB.
2. ERV UNIT TO BE INSTALLED BY MECHANICAL CONTRACTOR. REFER TO MECHANICAL DRAWINGS. COORDINATE DRAIN LINES, WATER LINES, AND GAS PIPING WITH UNIT AND CORRESPONDING DUCTWORK.
3. RUN CONDENSATE DRAIN LINE NEAR FLOOR. SUPPORT WITH FLOOR MOUNTED SUPPORTS AT 6'-0" MAXIMUM SPACING. PIPING TO BE GRADED AT 1/8" MINIMUM SLOPE TOWARDS CR-1. ADJUST SUPPORTS AS REQUIRED FOR GRADING. COORDINATE PIPE WITH EQUIPMENT MOUNTED ON PLATFORM FLOOR. SEE DETAIL B/P501.
4. CONDENSATE RECEIVER LOCATED ON EQUIPMENT PLATFORM LEVEL. DROP 2" WASTE LINE DOWN IN WALL BELOW. RISE 2" VENT UP AND CONNECT TO NEAREST VTR AS SHOWN. REFER TO DETAIL A/P502 FOR TYPICAL CR-1 INSTALLATION.
5. RUN GAS PIPING ABOVE EQUIPMENT PLATFORM. REFER TO MECHANICAL DRAWINGS TO COORDIANTE WITH DUCTWORK AND EQUIPMENT.
6. RISE ALL PIPING TO MINIMUM OF 6'-8" (OR AS HIGH AS POSSIBLE) ABOVE PLATFORM FLOOR WHEN CROSSING FROM ONE SIDE TO THE OTHER. COORDINATE PIPING WITH EQUIPMENT AND DUCTWORK. REFER TO MECHANICAL DRAWINGS FOR DUCTWORK LOCATIONS.
7. CONNECT 1-1/4" GAS LINE TO FURNACE WITH SHUT-OFF VALVE, AND FLEXIBLE HOSE CONNECTION. REFER TO DETAIL G/P502 FOR TYPICAL GAS LINE CONNECTION. VENT REGULATOR TO EXTERIOR AS RECOMMENDED BY MANUFACTURER.
8. RISE 1/2" HOT AND COLD WATER LINES UP THRU FLOOR AND CONNECT TO WATER HEATER. WATER HEATER TO BE COMPLETE WITH HEAT TRAP NIPPLES, THERMAL EXPANSION TANK, MIXING VALVE, AND DRAIN PAN. REFER TO DETAIL G/P501 FOR TYPICAL PIPING CONNECTIONS.
9. RISE 3/4" HOT AND COLD WATER LINES, AND 3/4" HOT WATER RECIRC. LINES UP THRU FLOOR AND CONNECT TO WATER HEATER. REFER TO DETAIL D/P501 FOR TYPICAL PIPING CONNECTIONS.
10. GAS FIRED, TANKLESS WATER HEATER WITH MIXING VALVE FOR FONT FILL. REFER TO DETAIL C/P501 FOR PIPING CONNECTIONS AND INSTALLATION.
11. REFRIGERANT PIPING INSTALLED BY MECHANICAL CONTRACTOR. COORDINATE DRAIN LINES WITH REFRIGERANT PIPING.
12. VENT UP IN WALL FROM FIXTURE BELOW. REFER TO SHEET P101.

bhd ARCHITECTS
www.bhdarchitects.com
Phone 801.571.0010
Fax 801.571.0303
Toll Free 888.571.0010
65 East Wadsworth Park Drive
Suite 205 Draper, Utah 84020

REGISTERED PROFESSIONAL ENGINEER — DAVID L. HANSEN — May 28,2025 — STATE OF UTAH

Engineered Systems Associates
1355 EAST CENTER
POCATELLO, IDAHO 83201
PHONE: (208) 233-0501
FAX: (208) 233-0529
EMAIL:esa@engsystems.com

ESA JOB NUMBER: 25042

THE CHURCH OF JESUS CHRIST OF LATTER-DAY SAINTS

Nibley 6 & Nibley UT West Stake

Approx. 3410 South 1200 West, Nibley, Utah
41.677689 - 111.860775

Owner #: 514-4728
Plan Series: Heritage 24
County Parcel: 03:050:0016
BHD #: 2403
Date: 29 Mar 2025

Drawing Issue and Revision Schedule

#	Date	Description
1	29 May 2025	Bid Documents

Equipment Platform Plumbing Plan

P102

5/29/2025 8:49:33 AM

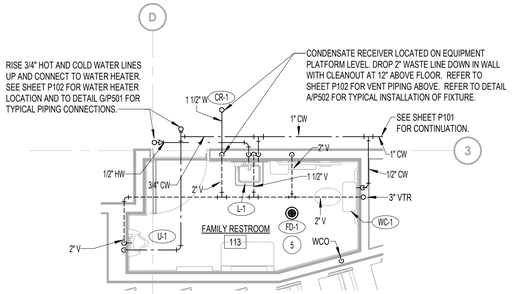

A P401 **LARGE SCALE FAMILY RESTROOM PLAN**
SCALE: 1/4" = 1'-0" (RESTROOM 113 SHOWN - RESTROOM 170 MIRRORED)

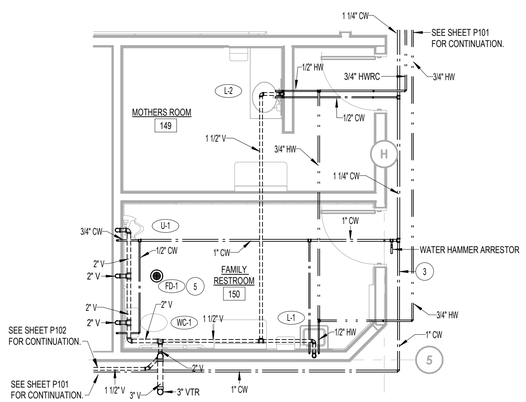

B P401 **LARGE SCALE FAMILY RESTROOM PLAN**
SCALE: 1/4" = 1'-0"

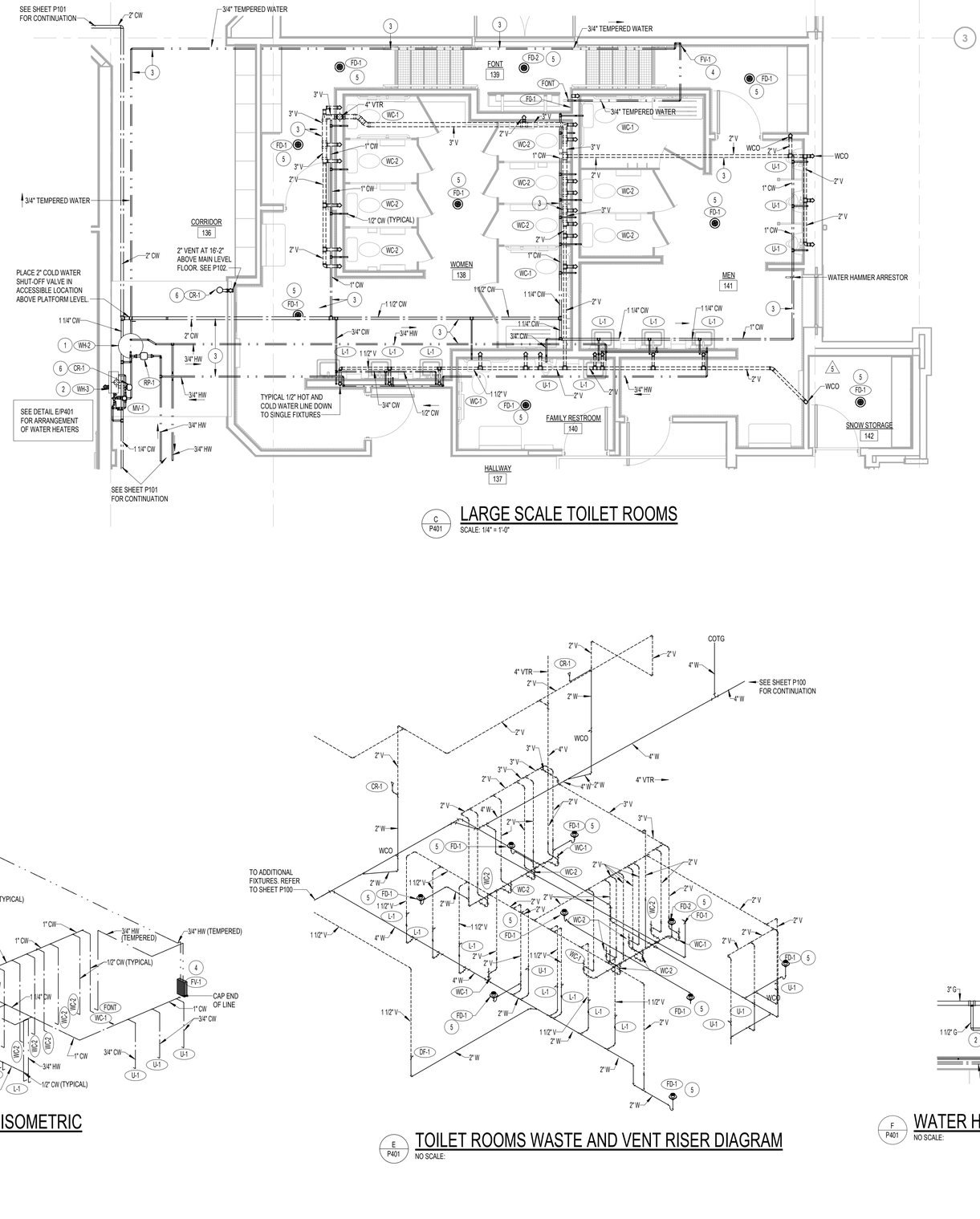

C P401 **LARGE SCALE TOILET ROOMS**
SCALE: 1/4" = 1'-0"

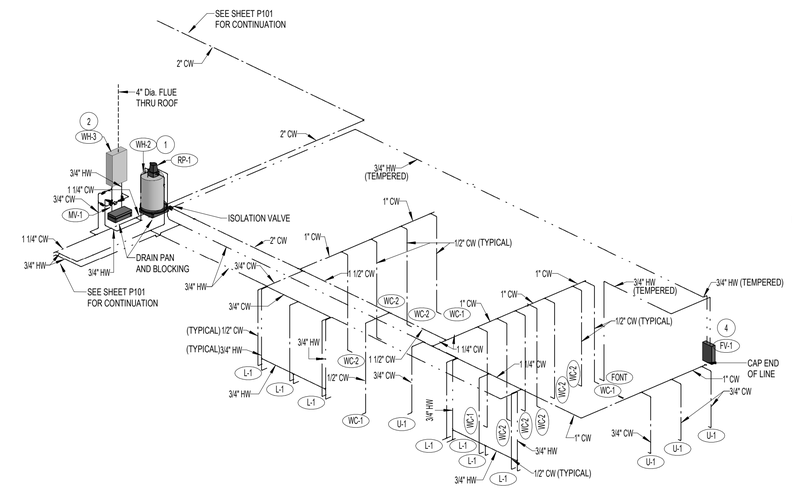

D P401 **TOILET ROOMS WATER PIPING ISOMETRIC**
NO SCALE:

E P401 **TOILET ROOMS WASTE AND VENT RISER DIAGRAM**
NO SCALE:

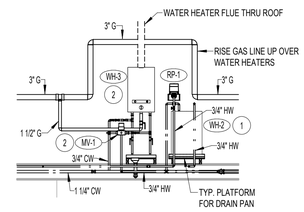

F P401 **WATER HEATER COORDINATION DETAIL**
NO SCALE:

PLAN NOTES:

1. RISE 3/4" HOT AND COLD WATER LINES, AND 3/4" HOT WATER RECIRC. LINES UP THRU EQUIPMENT PLATFORM FLOOR AND CONNECT TO WATER HEATER. WATER HEATER TO BE COMPLETE WITH RECIRCULATION PUMP WITH AQUASTAT CONTROL, THERMAL EXPANSION TANK, HEAT TRAP NIPPLES, MIXING VALVE, AND T&P RELIEF VALVE. REFER TO DETAIL D/P501 FOR TYPICAL PIPING CONNECTIONS.
2. INSTALL GAS FIRED, TANKLESS WATER HEATER WITH MIXING VALVE FOR FONT FILL ON UPPER LEVEL WALL. PROVIDE MIXING VALVE AND DRAIN PAN FOR WATER HEATER. REFER TO DETAIL C/P501 FOR PIPING CONNECTIONS AND INSTALLATION. RUN 3/4" TEMPERED WATER LINE TO FONT FILL VALVE AS SHOWN.
3. DOMESTIC WATER PIPNG TO BE RUN ABOVE EQUIPMENT PLATFORM. PIPING SHALL BE STACKED ON WALL. REFER TO GENERAL NOTE #0 ON SHEET P102.
4. DROP 3/4" TEMPERED WATER PIPING DOWN IN WALL AND CONNECT TO FONT FILL VALVE. REFER TO DETAIL E/P501 FOR TYPICAL FILL VALVE TO BE INSTALLED AND FOR PIPING CONNECTIONS.
5. PROVIDE TRAP SEAL WITH FLOOR DRAIN. TRAP SEAL TO BE UPC APPROVED. SEE DETAIL C/P502.
6. CONDENSATE RECEIVER LOCATED ON EQUIPMENT PLATFORM LEVEL. DROP 2" WASTE LINE DOWN IN WALL WITH CLEANOUT AT 12" ABOVE FLOOR. REFER TO SHEET P102 FOR VENT PIPING ABOVE. REFER TO DETAIL A/P502 FOR TYPICAL INSTALLATION OF FIXTURE.

bhd ARCHITECTS
www.bhdarchitects.com
Phone 801.571.0010
Fax 801.571.0303
Toll Free 888.571.0010
65 East Wadsworth Park Drive
Suite 205 Draper, Utah 84020

REGISTERED PROFESSIONAL ENGINEER
DAVID L. HANSEN
May 28,2025
STATE OF UTAH

Engineered Systems Associates
1355 EAST CENTER
POCATELLO, IDAHO 83201
PHONE: (208) 233-0501
FAX: (208) 233-0529
EMAIL:esa@engsystems.com
ESA JOB NUMBER: 25042

THE CHURCH OF JESUS CHRIST OF LATTER-DAY SAINTS

Nibley 6 & Nibley UT West Stake

Approx. 3410 South 1200 West, Nibley, Utah
41.670809 , -111.840775

Date: 29 Mar 2025
BHD #: 2403
County Parcel: 03:050:0016
Plan Series: Heritage 24
Owner #: 514-4728

Drawing Issue and Revision Schedule			
#	Date	Description	
1	29 May 2025	Bid Documents	

Large Scale Plumbing Plans and Isometrics

P401

5/29/2025 8:49:41 AM

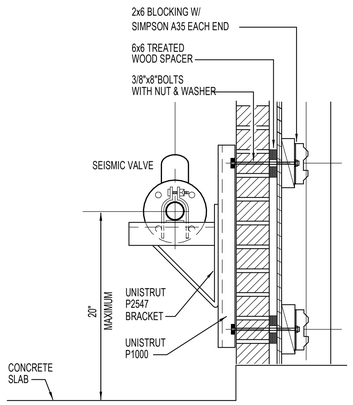

1 SECTION
SCALE: NONE

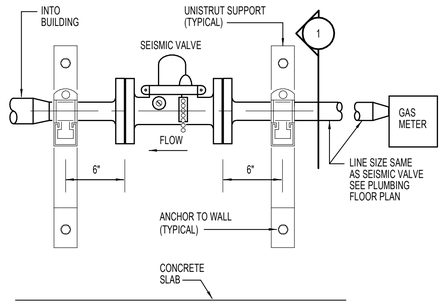

A SEISMIC VALVE DETAIL
SCALE: NONE

NOTES:

1. VALVE MUST BE INSTALLED WITH THE CHAIN AND RESET BUTTON FACING OUT AND ACCESSIBLE..
2. THE CHAIN IS A PLUMB LINE. MAKE SURE VALVE IS MOUNTED ABSOLUTELY LEVEL AND NO PART OF THE CHAIN IS TOUCHING THE RING.
3. VALVE MUST BE INSTALLED WITH GAS FLOW IN DIRECTION OF "ARROW" CAST INTO VALVE BODY.
4. SIZE SEISMIC VALVE ACCORDING TO TOTAL BUILDING MBH.
5. SEISMIC VALVE TO BE LOCATED WITHIN THE FIRST SIX LINEAR FEET OF PIPE FROM METER.
6. SEISMIC VALVE MUST BE 2" MIN. WITH FLANGE.

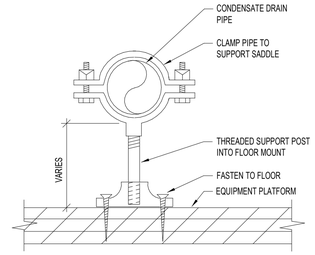

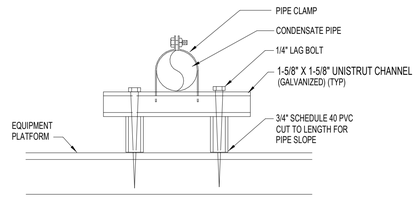

B CONDENSATE DRAIN PIPE SUPPORT DETAIL
NO SCALE

CONDENSATE DRAIN PIPING MAY BE INSTALLED
USING EITHER OF THESE TWO SUPPORT METHODS

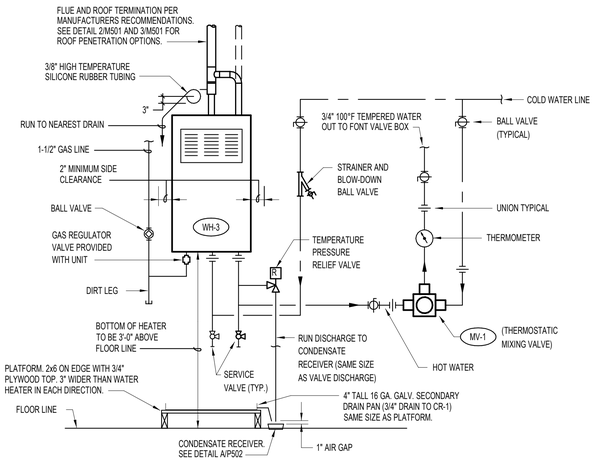

C TANKLESS WATER HEATER & MIXING VALVE DETAIL
NO SCALE

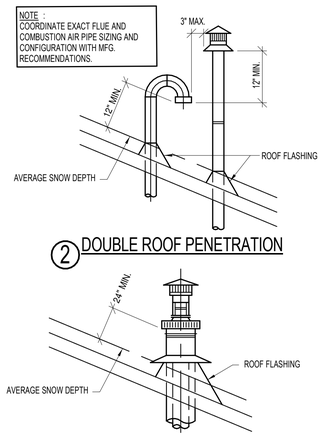

2 DOUBLE ROOF PENETRATION

3 SINGLE ROOF PENETRATION

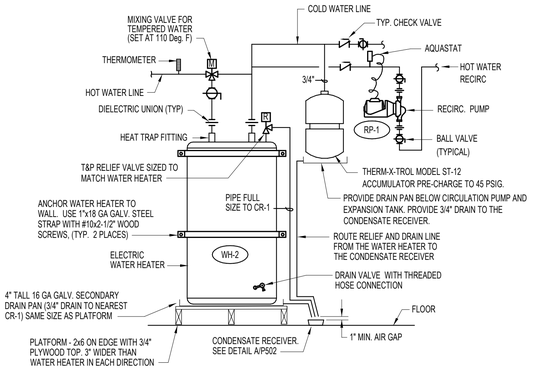

D WATER HEATER PIPING DETAIL
NO SCALE

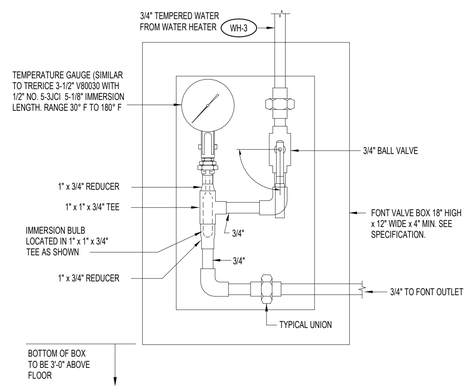

E FONT VALVE PIPING DETAIL
NO SCALE

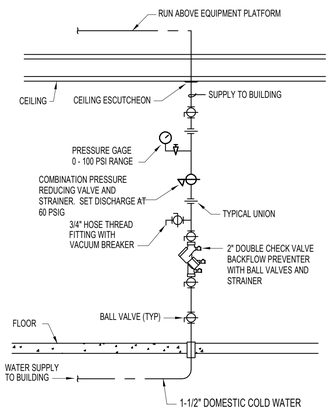

F VERTICAL WATER PRESSURE REDUCING STATION
NO SCALE

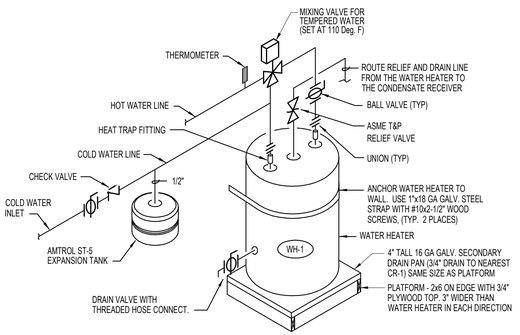

G WATER HEATER PIPING DIAGRAM
NO SCALE

5/29/2025 8:49:42 AM

bhd ARCHITECTS
www.bhdarchitects.com
Phone 801.571.0010
Fax 801.571.0303
Toll Free 888.571.0010
65 East Wadsworth Park Drive
Suite 205 Draper, Utah 84020

REGISTERED PROFESSIONAL ENGINEER
DAVID L. HANSEN
May 28,2025
STATE OF UTAH

Engineered Systems Associates
1355 EAST CENTER
POCATELLO, IDAHO 83201
PHONE: (208) 233-0501
FAX: (208) 233-0529
EMAIL:esa@engsystems.com
ESA JOB NUMBER: 25042

THE CHURCH OF
JESUS CHRIST
OF LATTER-DAY SAINTS

Nibley 6 &
Nibley UT West Stake

Approx. 3410 South 1200 West, Nibley, Utah
41.672689 - 111.860775

Owner #: 514-4728
Plan Series: Heritage 24
County Parcel: 03:050:0016
BHD #: 2403
Date: 29 Mar 2025

Drawing Issue and Revision Schedule

#	Date	Description
1	29 May 2025	Bid Documents

Plumbing Details
and Diagrams

P501

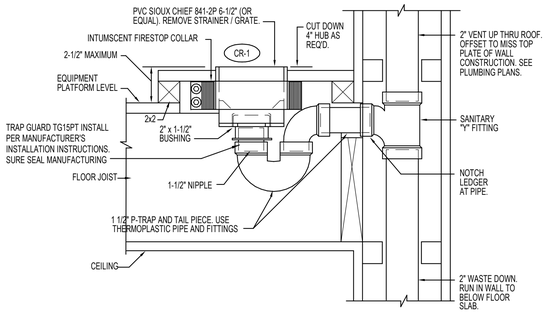

A CONDENSATE RECEIVER DETAIL
NO SCALE

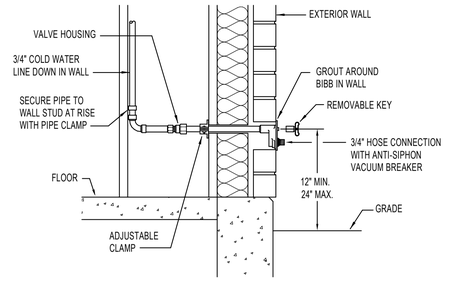

B EXTERIOR HOSE BIBB DETAIL
NO SCALE

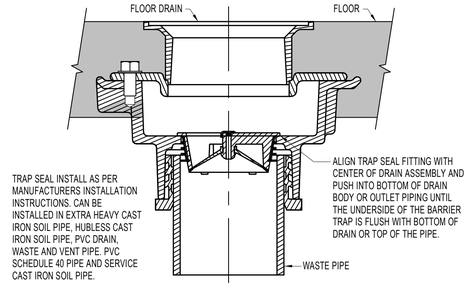

C TRAP SEAL INSTALLATION DETAIL
NO SCALE

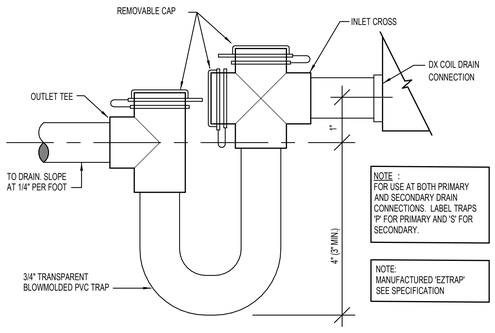

D DX COIL CONDENSATE DRAIN DETAIL
NO SCALE

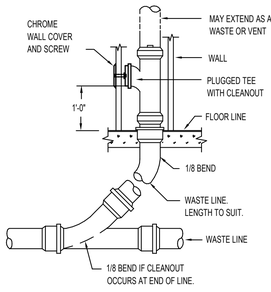

E WALL CLEANOUT DETAIL
NO SCALE

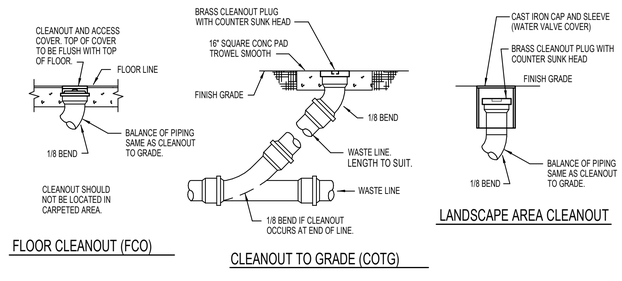

FLOOR CLEANOUT (FCO)

CLEANOUT TO GRADE (COTG)

LANDSCAPE AREA CLEANOUT

F CLEANOUT DETAILS
NO SCALE

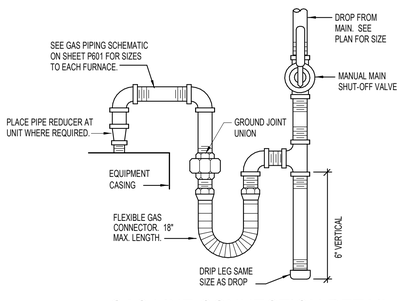

G GAS LINE CONNECTION DETAIL
NO SCALE

5/29/2025 8:49:42 AM

bhd ARCHITECTS
www.bhdarchitects.com
Phone 801.571.0010
Fax 801.571.0303
Toll Free 888.571.0010
65 East Wadsworth Park Drive
Suite 205 Draper, Utah 84020

REGISTERED PROFESSIONAL ENGINEER — DAVID L. HANSEN — May 28,2025 — STATE OF UTAH

Engineered Systems Associates
1355 EAST CENTER
POCATELLO, IDAHO 83201
PHONE: (208) 233-0501
FAX: (208) 233-0529
EMAIL:esa@engsystems.com
ESA JOB NUMBER: 25042

THE CHURCH OF JESUS CHRIST OF LATTER-DAY SAINTS

Nibley 6 & Nibley UT West Stake

Approx. 3410 South 1200 West, Nibley, Utah
41.670839, -111.860775

BHD #: 2403
County Parcel: 03:050:0016
Plan Series: Heritage 24
Owner #: 514-4728
Date: 29 Mar 2025

Drawing Issue and Revision Schedule

#	Date	Description
1	29 May 2025	Bid Documents

Plumbing Details and Diagrams

P502

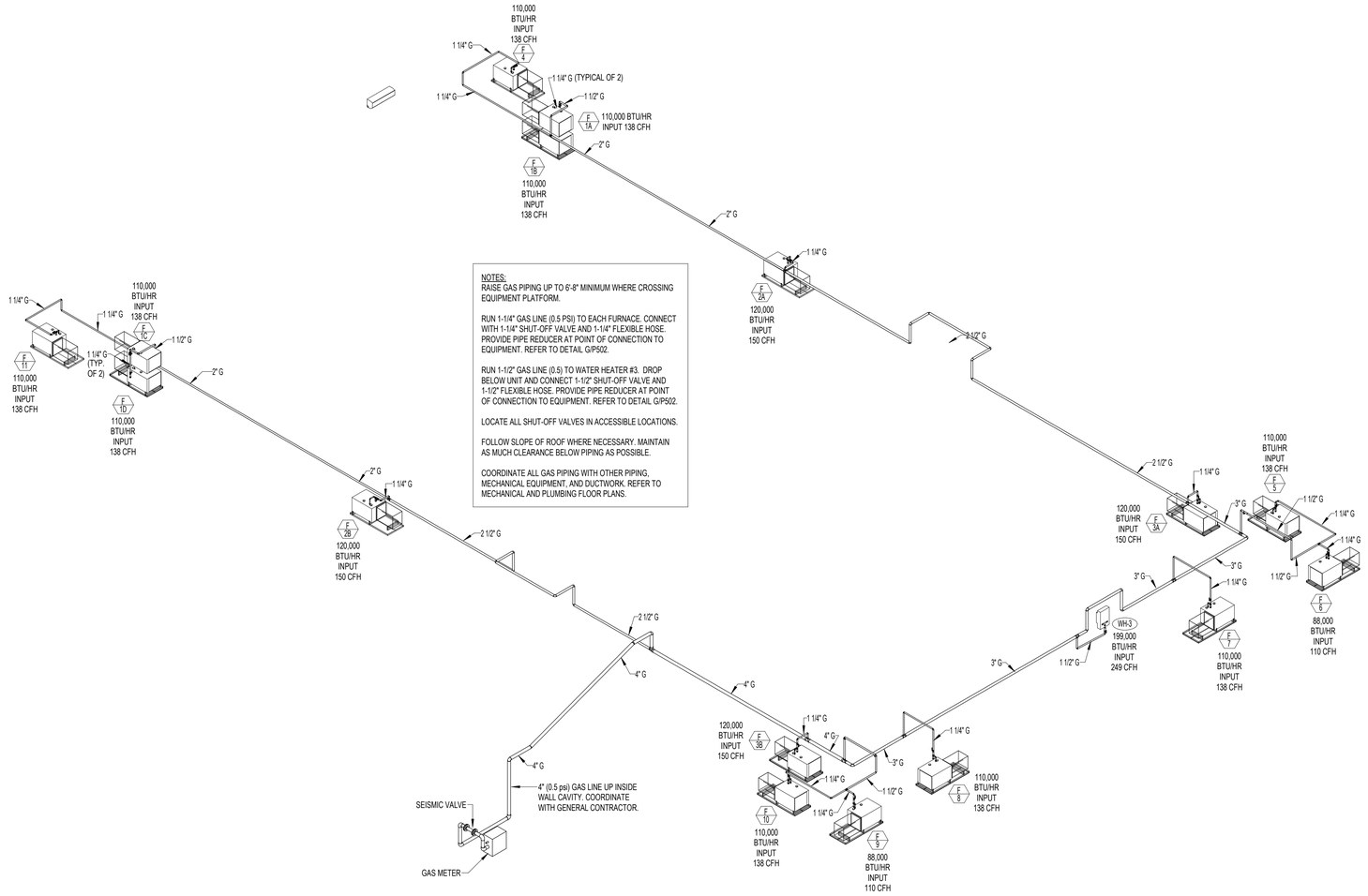

NOTES:
RAISE GAS PIPING UP TO 6'-8" MINIMUM WHERE CROSSING EQUIPMENT PLATFORM.

RUN 1-1/4" GAS LINE (0.5 PSI) TO EACH FURNACE. CONNECT WITH 1-1/4" SHUT-OFF VALVE AND 1-1/4" FLEXIBLE HOSE. PROVIDE PIPE REDUCER AT POINT OF CONNECTION TO EQUIPMENT. REFER TO DETAIL G/P502.

RUN 1-1/2" GAS LINE (0.5) TO WATER HEATER #3. DROP BELOW UNIT AND CONNECT 1-1/2" SHUT-OFF VALVE AND 1-1/2" FLEXIBLE HOSE. PROVIDE PIPE REDUCER AT POINT OF CONNECTION TO EQUIPMENT. REFER TO DETAIL G/P502.

LOCATE ALL SHUT-OFF VALVES IN ACCESSIBLE LOCATIONS.

FOLLOW SLOPE OF ROOF WHERE NECESSARY. MAINTAIN AS MUCH CLEARANCE BELOW PIPING AS POSSIBLE.

COORDINATE ALL GAS PIPING WITH OTHER PIPING, MECHANICAL EQUIPMENT, AND DUCTWORK. REFER TO MECHANICAL AND PLUMBING FLOOR PLANS.

GAS PIPING SCHEMATIC

NO SCALE:

PLUMBING FIXTURE SCHEDULE (1) (2)

MARK	FIXTURE	PIPE SIZE TRAP	WASTE	VENT	C.W.	H.W.	REMARKS
CR-1	CONDENSATE RECEPTOR	1-1/2"	1-1/2"	2"	-	-	SEE DETAIL A/P502, FIELD ASSEMBLED
DF-1	DRINKING FOUNTAIN	1-1/2"	1-1/2"	1-1/2"	1/2"	-	ELECTRIC BI-LEVEL (ADA APPROVED) (3)
FD-1	FLOOR DRAIN	2"	2"	2"	-	-	WITH DEEP SEAL P-TRAP. PROVIDE UPC APPROVED TRAP SEAL SIMILAR TO JONES & STEPHENS MODEL P26001.
FD-2	FONT DRAIN	2"	2"	2"	-	-	SEE SPECIFICATIONS
FO-1	FONT OVERFLOW	2"	2"	2"	-	-	SEE SPECIFICATIONS
FONT	FONT SPOUT	-	-	-	-	3/4"	SUPPLY OUTLET 3/4" TEMPERED WATER
FS-1	FLOOR SINK	4"	4"	2"	-	-	WITH DEEP SEAL P-TRAP. PROVIDE UPC APPROVED TRAP SEAL SIMILAR TO JONES & STEPHENS MODEL P26001.
FV-1	FONT SUPPLY VALVE	-	-	-	-	3/4"	SEE SPECIFICATIONS. 3/4" TEMPERED WATER SUPPLY
HB-1	EXTERIOR HOSE BIBB	-	-	-	3/4"	-	FREEZE PROOF - 20" MINIMUM LENGTH
JS-1	SERVICE SINK	3"	3"	2"	1/2"	1/2"	FLOOR TYPE
L-1	WALL HUNG LAVATORY	1-1/2"	1-1/2"	1-1/2"	1/2"	1/2"	SELF SUPPORTING 20"x18" (ADA APPROVED) WITH OFFSET DRAIN AND INSULATED PIPE COVERS FOR DRAIN, HOT & CW (3)
L-2	COUNTERTOP LAVATORY	1-1/2"	1-1/2"	1-1/2"	1/2"	1/2"	(ADA APPROVED) WITH OFFSET DRAIN AND INSULATED PIPE COVERS FOR DRAIN, HOT & CW (3)
MV-1	MIXING VALVE	-	-	-	3/4"	3/4"	MOUNTED ADJACENT TO WH-3. SET DISCHARGE TEMPERATURE AT 100 Deg. F. MEETS ASSE 1017. SEE DETAIL C/P501 (4)
RP-1	HOT WATER RECIRC. PUMP	-	-	-	-	3/4"	IN-LINE BOOSTER PUMP WITH 3 GPM, 3 SPEED MOTOR AND STRAP-ON AQUASTAT
S-1	SERVING AREA SINK	1-1/2"	1-1/2"	1-1/2"	1/2"	1/2"	TWO COMPARTMENT
SS-1	SACRAMENT SINK	1-1/2"	1-1/2"	1-1/2"	1/2"	-	COUNTER TOP
U-1	URINAL	INT.	2"	2"	3/4"	-	FLUSH VALVE, WALL HUNG, HIGH EFFICIENCY URINAL (3)
WC-1	ADA WATER CLOSET	INT.	4"	2"	1/2"	-	FLUSH TANK, 18" RIM HEIGHT (1.6 GPM PER FLUSH)
WC-2	WATER CLOSET	INT.	4"	2"	1/2"	-	FLUSH TANK (1.6 GPM PER FLUSH)
WH-1	TANK TYPE WATER HEATER	-	-	-	3/4"	3/4"	ELECTRIC 10 GALLON COMPACT MODEL WITH SINGLE 1.5 KW ELEMENT AND T&P RELIEF VALVE. (120/60/1) (4)
WH-2	TANK TYPE WATER HEATER	-	-	-	3/4"	3/4"	ELECTRIC 40 GALLON, (2) NON-SIMULTANEOUS 4.5 KW ELEMENT WITH RECIRC. PUMP (208/60/1) WITH T&P RELIEF VALVE (4)
WH-3	TANKLESS WATER HEATER	-	-	-	3/4"	3/4"	GAS FIRED TANKLESS HEATER WITH 199,000 BTU INPUT AT SEA LEVEL. SET AT 140 Deg. F. PROVIDE T&P RELIEF VALVE (120/60/1) (5)

(1) COLD WATER FIXTURE UNITS ARE 129. WASTE WATER FIXTURE UNITS ARE 144.
(2) SEE SPECIFICATIONS FOR APPROVED MANUFACTURERS AND MODEL NUMBERS.
(3) WHEN MOUNTED PER ARCHITECTURAL ELEVATIONS, ADA ACCESSIBILITY REQUIREMENTS ARE SATISFIED.
(4) WATER HEATER TO BE COMPLETE WITH HEAT TRAP NIPPLES, MIXING VALVE, DRAIN PAN, AND 2 GALLON EXPANSION TANK.
(5) RISE 4" ROUND FLUE UP THRU ROOF WITH WEATHER CAP. PROVIDE DRAIN PAN BELOW HEATER.

GAS PIPING CALCULATIONS:

WH-3	199,000 BTU	F 4	110,000 BTU
F 1A	110,000 BTU	F 5	110,000 BTU
F 1B	110,000 BTU	F 6	88,000 BTU
F 1C	110,000 BTU	F 7	110,000 BTU
F 10	110,000 BTU	F 8	110,000 BTU
F 2A	120,000 BTU	F 9	88,000 BTU
F 2B	120,000 BTU	F 10	110,000 BTU
F 3A	120,000 BTU	F 11	110,000 BTU
F 3B	120,000 BTU		836,000 BTU
	1,199,000 BTU		

TOTAL BTU LOAD — 1,965,000 BTU ACTUAL 2,300,000 DESIGN
BTU / 800 = CFH — 2,875 CFH
TOTAL PIPE DESIGN LENGTH — 450 FEET
LP GAS PIPE SIZE — 4"
DISCHARGE PRESSURE — 0.5 PSI

NOTE:
BTU/HR CAPCITIES ARE MAXIMUM POSSIBLE, BASED ON MANUFACTURER'S LISTED IN SPECIFICATIONS.

bhd ARCHITECTS
www.bhdarchitects.com
Phone 801.571.0010
Fax 801.571.0303
Toll Free 888.571.0010
65 East Wadsworth Park Drive
Suite 205 Draper, Utah 84020

REGISTERED PROFESSIONAL ENGINEER — DAVID L. HANSEN — May 28,2025 — STATE OF UTAH

ESA Engineered Systems Associates
1355 EAST CENTER
POCATELLO, IDAHO 83201
PHONE: (208) 233-0501
FAX: (208) 233-0529
EMAIL:esa@engsystems.com
ESA JOB NUMBER: 25042

THE CHURCH OF JESUS CHRIST OF LATTER-DAY SAINTS

Nibley 6 & Nibley UT West Stake
Approx. 3410 South 1200 West, Nibley, Utah
41.670809, -111.860775

BHD #: 2403
County Parcel: 03:050:0016
Plan Series: Heritage 24
Owner #: 514-4728
Date: 29 Mar 2025

Drawing Issue and Revision Schedule

#	Date	Description
1	29 May 2025	Bid Documents

Gas Piping Calculations and Isometric Plumbing Fixture Schedules

P601

5/29/2025 8:49:43 AM

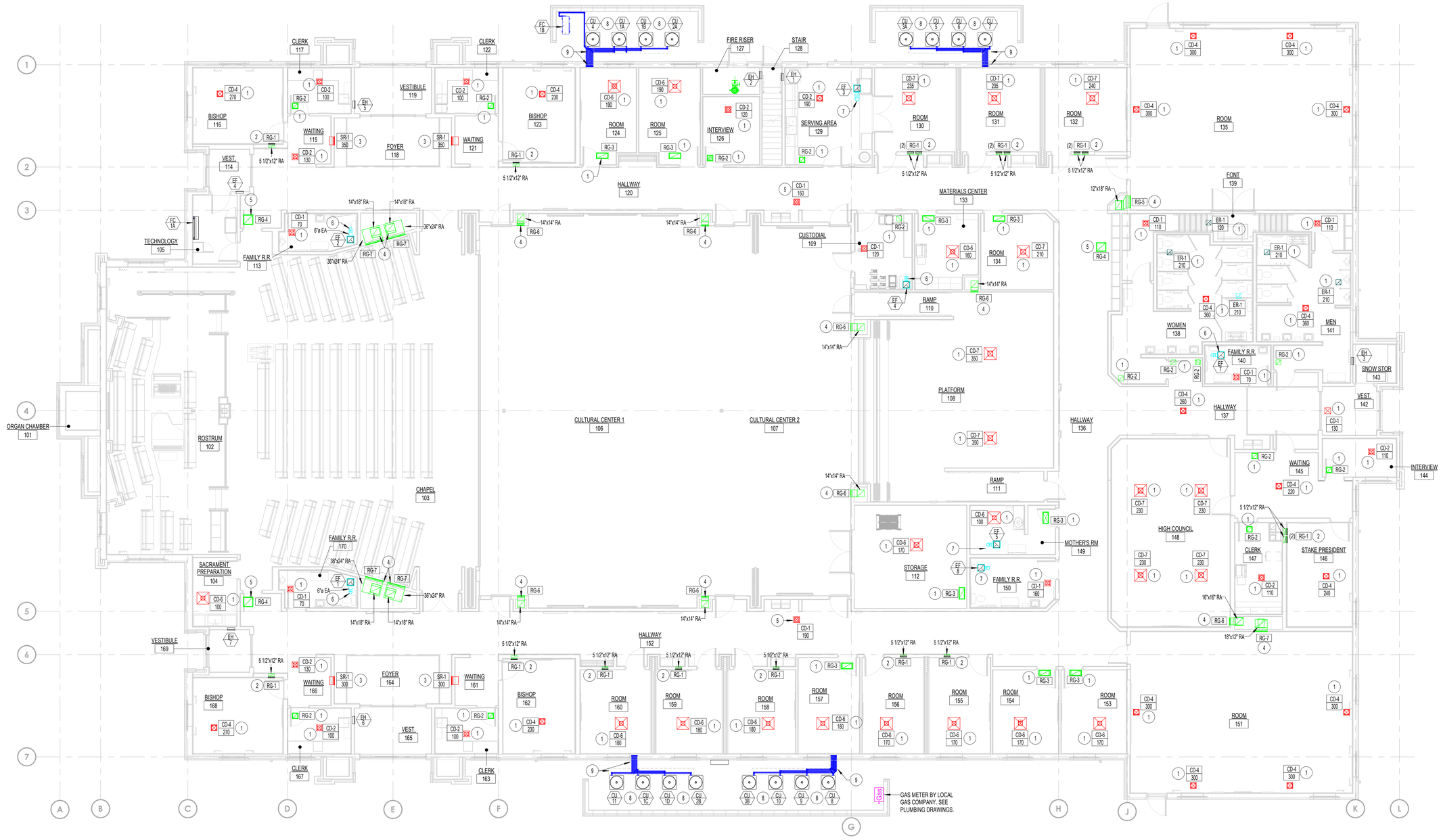

GENERAL NOTES:

A- DRAWINGS SHOW GENERAL ARRANGEMENTS OF PIPING, DUCTWORK, EQUIPMENT, ETC. FOLLOW AS CLOSELY AS ACTUAL BUILDING CONSTRUCTION AND WORK OF OTHER TRADES WILL PERMIT. BECAUSE OF THE SMALL SCALE OF THE DRAWINGS, IT IS NOT POSSIBLE TO INDICATE ALL OFFSETS, FITTINGS, AND ACCESSORIES THAT MAY BE REQUIRED. INVESTIGATE STRUCTURAL AND FINISH CONDITIONS AFFECTING THIS WORK AND ARRANGE WORK ACCORDINGLY. PROVIDE SUCH FITTINGS, VALVES, AND ACCESSORIES REQUIRED TO MEET CONDITIONS AND PROVIDE COMPLETE WORKING SYSTEM.

B- ALL DUCT DIMENSIONS ARE CLEAR DIMENSIONS INSIDE DUCT LINER.

C- DO NOT USE DUCT LINER INSIDE RETURN AIR DUCT RISERS IN 2"x6" WALLS OF PERIMETER ROOMS. COORDINATE SUCH RISERS WITH ELECTRIC CONDUITS AND DEVICES.

D- WRAP ALL OUTSIDE AIR DUCTS WITH EXTERNAL INSULATION.

E- SEE ARCHITECTURAL REFLECTED CEILING PLAN FOR EXACT LOCATION OF GRILLES AND DIFFUSERS.

F- ALL PVC EQUIPMENT, VENTS, PLUMBING VENTS, AND PENTHOUSE EXHAUST VENTS SHALL BE PAINTED TO MATCH ROOF COLOR.

G- DO NOT ROUTE PIPES ABOVE ELECTRICAL PANELS 4'-0" DEEP AND 6'-6" HIGH.

H- SEE SHEET M102 FOR CONTINUATION OF ALL DUCT RISERS AND DUCTWORK ABOVE CEILINGS.

J- COORDINATE EQUIPMENT AND DUCTWORK WITH NATURAL GAS, AND WATER PIPING. REFER TO SHEET P102 FOR PIPING LOCATIONS.

W N E S

MECHANICAL FLOOR PLAN

SCALE: 1/8" = 1'-0"

PLAN NOTES:

1. INSTALL CEILING DIFFUSER OR RETURN GRILLE IN CEILING AS SCHEDULED. COORDINATE GRILLE AND DIFFUSER LOCATIONS WITH LIGHT FIXTURES, CEILING SUPPORTS, AND DUCTWORK ABOVE CEILINGS. REFER TO SHEET M102 FOR DUCTWORK ABOVE CEILINGS. ALL DUCTWORK TO BE RIGID CONSTRUCTION.
2. 12" x 5-1/2" UN-LINED RETURN AIR DUCT DOWN IN WALL CAVITY. INSTALL RETURN AIR GRILLE IN WALL AT 6" ABOVE FLOOR AND CONNECT TO DUCT DROP. REFER TO SHEET M102 FOR DUCTWORK ABOVE CEILINGS. COORDINATE DUCT RISER WITH ELECTRICAL CONDUITS AND OTHER DEVICES. REFER TO DETAIL B/M504 FOR TYPICAL INSTALLATION.
3. MOUNT SIDEWALL SUPPLY REGISTER HIGH ON THE WALL NEAR CEILING. REFER TO ARCHITECTURAL ELEVATION PLANS FOR EXACT PLACEMENT. REFER TO SHEET M102 FOR DUCTWORK CONNECTED TO REGISTER.
4. INSTALL RETURN AIR GRILLE, AS SCHEDULED, IN WALL AT 8" ABOVE FLOOR AND CONNECT TO DUCT DROP IN CHASE. COORDINATE DUCT DROP WITH ELECTRICAL CONDUITS AND OTHER DEVICES. REFER TO SHEET M102 FOR DUCTWORK ABOVE CEILINGS. ALL DUCTWORK TO BE RIGID CONSTRUCTION.
5. DIFFUSER OR RETURN AIR GRILLE LOCATED IN CORRIDOR CEILING. RISE DUCT (SAME SIZE AS GRILLE) UP THRU PLATFORM FLOOR AND CONNECT TO DUCTWORK ABOVE. COORDINATE GRILLE LOCATION WITH DUCTWORK ABOVE, FRAMING OF PLATFORM, AND LIGHT FIXTURES.
6. INSTALL EXHAUST FAN IN CEILING. COORDINATE WITH LIGHT FIXTURES AND WITH DUCTWORK ABOVE CEILINGS. RISE RIGID ROUND EXHAUST DUCT AS CALLED OUT ON PLAN UP WITH ROOF SLOPE TO CONNECT TO EXHAUST PENTHOUSE. REFER TO SHEET M102 FOR CONTINUATION OF DUCTWORK AND LOCATION OF EXHAUST PENTHOUSE. REFER TO DETAIL D/M504 FOR TYPICAL FAN INSTALLATION.
7. INSTALL EXHAUST FAN IN CEILING. COORDINATE WITH LIGHT FIXTURES AND WITH DUCTWORK ABOVE CEILINGS. RISE RIGID ROUND EXHAUST DUCT AS CALLED OUT ON PLAN UP THRU ROOF WITH ROOF CAP. REFER TO DETAIL D/M504 FOR TYPICAL FAN INSTALLATION.
8. COORDINATE INSTALLATION OF CONDENSING UNITS IN MECHANICAL COMPOUND. MAINTAIN CLEARANCES AS RECOMMENDED BY MANUFACTURER, IN FRONT OF GAS METER OR ELECTRAIL PANELS, AND BETWEEN UNITS. PROVIDE 1" THICK NEOPRENE PADS UNDER EACH CORNER OF EACH UNIT FOR VIBRATION ISOLATION.
9. RUN REFRIGERANT PIPING AT GRADE LEVEL IN FRONT OF UNITS. COVER PIPING WITH PRE-FINISHED METAL COVER. EXTEND PIPING INTO WALL CAVITY AND RISE UP TO ABOVE CEILINGS. REFER TO DETAILS ON SHEET M501 FOR TYPICAL PIPING SUPPORTS AND COVERS.

bhd ARCHITECTS
www.bhdarchitects.com
Phone 801.571.0010
Fax 801.571.0303
Toll Free 888.571.0010
65 East Wadsworth Park Drive
Suite 205 Draper, Utah 84020

REGISTERED PROFESSIONAL ENGINEER
DAVID L. HANSEN
May 28,2025
STATE OF UTAH

Engineered Systems Associates
1355 EAST CENTER
POCATELLO, IDAHO 83201
PHONE: (208) 233-0501
FAX: (208) 233-0529
EMAIL:esa@engsystems.com
ESA JOB NUMBER: 25042

THE CHURCH OF JESUS CHRIST OF LATTER-DAY SAINTS

Nibley 6 & Nibley UT West Stake

Approx. 3410 South 1200 West, Nibley, Utah
41.672809 , -111.860775

Owner #: 514-4728
Plan Series: Heritage 24
County Parcel: 03:050:0016
BHD #: 2403
Date: 29 Mar 2025

Drawing Issue and Revision Schedule

#	Date	Description
1	29 May 2025	Bid Documents

Mechanical Floor Plan

M101

5/29/2025 8:45:43 AM

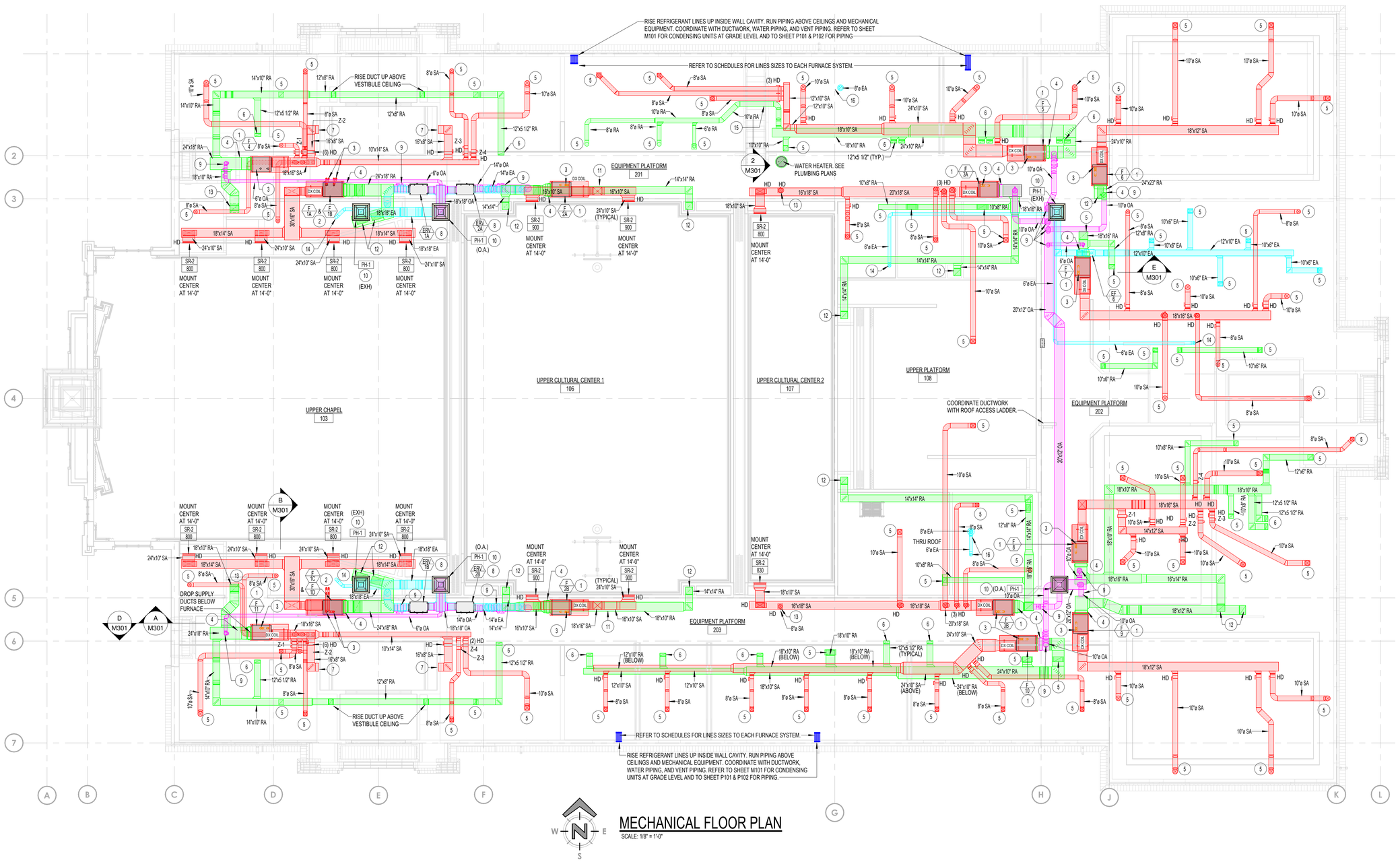

MECHANICAL FLOOR PLAN

SCALE: 1/8" = 1'-0"

GENERAL NOTES:

A- DRAWINGS SHOW GENERAL ARRANGEMENTS OF PIPING, DUCTWORK, EQUIPMENT, ETC. FOLLOW AS CLOSELY AS ACTUAL BUILDING CONSTRUCTION AND WORK OF OTHER TRADES WILL PERMIT. BECAUSE OF THE SMALL SCALE OF THE DRAWINGS, IT IS NOT POSSIBLE TO INDICATE ALL OFFSETS, FITTINGS, AND ACCESSORIES THAT MAY BE REQUIRED. INVESTIGATE STRUCTURAL AND FINISH CONDITIONS AFFECTING THIS WORK AND ARRANGE WORK ACCORDINGLY. PROVIDE SUCH FITTINGS, VALVES, AND ACCESSORIES REQUIRED TO MEET CONDTIONS AND PROVIDE COMPLETE WORKING SYSTEM.

B- ALL DUCT DIMENSIONS ARE CLEAR DIMENSIONS INSIDE DUCT LINER.

C- DO NOT USE DUCT LINER INSIDE RETURN AIR DUCT RISERS IN 2'x6" WALLS OF PERIMETER ROOMS. COORDINATE SUCH RISERS WITH ELECTRIC CONDUITS AND DEVICES.

D- WRAP ALL OUTSIDE AIR DUCT WITH EXTERNAL INSULATION.

E- SEE ARCHITECTURAL REFLECTED CEILING PLAN FOR EXACT LOCATION OF GRILLES AND DIFFUSERS.

F- ALL EQUIPMENT PVC OR CPVC VENTS, PLUMBING VENTS, AND PENTHOUSE EXHAUST VENTS SHALL BE PAINTED TO MATCH ROOF COLOR.

G- DO NOT ROUTE PIPES ABOVE ELECTRICAL PANELS 4'-0" DEEP AND 6'-6" HIGH.

H- SEE SHEET M102 FOR CONTINUATION OF ALL DUCT RISERS AND DUCTWORK ABOVE CEILINGS.

J- COORDINATE EQUIPMENT AND DUCTWORK WITH NATURAL GAS, AND WATER PIPING. REFER TO SHEETS P101 AND P102 FOR PIPING LOCATIONS.

PLAN NOTES:

1. SUSPEND HORIZONTAL FURNACE WITH MATCHING DX COIL ABOVE PLATFORM LEVEL. PROVIDE DRAIN PAN BELOW FURNACE AND COIL SUPPORT EQUIPMENT FROM ROOF STRUCTURE. REFER TO DETAILS ON SHEET M503. KEEP EQUIPMENT AS CLOSE TO WALL AS POSSIBLE TO ALLOW CLEARANCE.
2. INSTALL (2) HORIZONTAL FURNACES WITH MATCHING DX COIL ON PLATFORM LEVEL. STACK EQUIPMENT ABOVE ONE ANOTHER. PROVIDE SINGLE DRAIN PAN BELOW BOTTOM FURNACE AND COIL. SUPPORT EQUIPMENT FROM ROOF STRUCTURE. REFER TO DETAIL D/M502 FOR TYPICAL HORIZONTAL FURNACE INSTALLATION, SUPPORTS AND PIPING CONNECTIONS. KEEP EQUIPMENT AS CLOSE TO WALL AS POSSIBLE TO ALLOW CLEARANCE.
3. RISE (2) 3" ROUND FURNACE VENTS UP THRU ROOF WITH CONCENTRIC TYPE FITTING. REFER TO DETAILS F/M501 AND D/M502 FOR TYPICAL INSTALLATION. DO NOT BLOCK FURNACE ACCESS WITH VENTS. TYPICAL FOR ALL FURNACE SYSTEMS. LOCATE VENTS ALONG BUILDING AXIS AND AWAY FROM ROOF PEAKS AND VALLEYS.
4. PROVIDE EXTERNAL FILTER SECTION FOR ALL FURNACE SYSTEMS. REFER TO DETAIL G/M502. FILTER SECTION AND MIXED AIR PLENUM TO MATCH SIZE OF FURNACE OPENING UNLESS NOTED OTHERWISE.
5. DROP BRANCH DUCT DOWN WITH ROOF STRUCTURE AS REQUIRED TO CONNECT TO CEILING DIFFUSER OR RETURN GRILLE. REFER TO SHEET M101 FOR DIFFUSER LOCATIONS. ALL DUCTWORK TO BE RIGID CONSTRUCTION.
6. DROP 12" x 3-1/2" UN-LINED RETURN AIR DUCT DOWN IN WALL CAVITY FOR RETURN AIR GRILLE BELOW. REFER TO SHEET M101 FOR LOCATION OF RETURN GRILLE IN ROOM BELOW. COORDINATE DUCT RISER WITH ELECTRICAL CONDUITS AND OTHER DEVICES. REFER TO DETAIL B/M504 FOR TYPICAL INSTALLATION.
7. MOUNT SIDEWALL SUPPLY REGISTER HIGH ON THE WALL NEAR CEILING. REFER TO ARCHITECTURAL ELEVATION PLANS FOR EXACT PLACEMENT. REFER TO SHEET M101 FOR CFM REQUIRED.
8. INSTALL ERV UNIT ON EQUIPMENT PLATFORM WITH VIBRATION ISOLATORS. SUPPORT FROM ROOF STRUCTURE. REFER TO ERV SCHEDULE ON SHEET M601 FOR ORIENTATION OF UNITS. CONNECT ERV UNIT TO OUTSIDE AIR DUCT FROM EXTERIOR OF BUILDING, OUTSIDE AIR DUCT TO EACH FURNACE SYSTEM, RELIEF AIR DUCT FROM EACH FURNACE SYSTEM, AND TO EXHAUST AIR DUCT UP TO PENTHOUSE. REFER TO SECTIONS ON SHEET M301 FOR TYPICAL DUCT CONNECTIONS. COORDINATE WITH ALL OTHER DUCTS AND PIPING.
9. CONNECT OUTSIDE AIR (FA) DUCT AND RELIEF AIR DUCT TO MIXED AIR PLENUM DUCT. PROVIDE MOTORIZED DAMPER, DUCT ACCESS DOOR AND MANUAL BALANCING DAMPER IN EACH DUCT. REFER TO FURNACE SCHEDULE ON SHEET M601 FOR MAXIMNUM CFM AMOUNTS OF OUTSIDE AIR / RELIEF AIR REQUIRED AT EACH FURNACE SYSTEM. REFER TO DETAIL C/M504 FOR TYPICAL DAMPER INSTALLATION.
10. MOUNT PENTHOUSE ON SLOPED ROOF WITH SLOPING ROOF CURB. DROP 18" x 18" PLENUM DUCT DOWN THRU ROOF FOR EXHAUST AIR OR OUTSIDE AIR DUCT CONNECTIONS AS SHOWN. COORDINATE PENTHOUSE LOCATIONS WITH ROOF JOISTS AND KEEP AS HIGH AS POSSIBLE TO RIDGE LINE. PENTHOUSES ARE TO BE AT SAME ELEVATION ON ROOF. OUTSIDE AIR AND EXHAUST AIR PENTHOUSES TO BE 10'-0" MINIMUM APART. REFER TO DETAIL A/M504 FOR TYPICAL INSTALLATION.
11. RUN RETURN DUCT AT FLOOR OF EQUIPMENT PLATFORM, BELOW EQUIPMENT. SUPPORT DUCT FROM PLATFORM WITH 2x2 WOOD BLOCKING.
12. DROP RETURN AIR DUCT DOWN IN DUCT CHASE FOR RETURN GRILLE BELOW. REFER TO SHEET M101 FOR LOCATION OF GRILLE AND CONTINUATION OF DUCTWORK.
13. SUPPLY OR RETURN AIR GRILLE LOCATED IN CORRIDOR CEILING BELOW DUCT. DROP DUCT (SAME SIZE AS GRILLE) DOWN THRU PLATFORM FLOOR AND CONNECT TO GRILLE. COORDINATE GRILLE LOCATION WITH FRAMING OF PLATFORM AND WITH LIGHT FIXTURES IN CORRIDOR BELOW.
14. 6" EXHAUST DUCT DOWN TO CEILING MOUNTED FAN BELOW. REFER TO SHEET M101 FOR CONTINUATION.
15. RUN (3) 8" ROUND SUPPLY AIR DUCTS AND (1) 10" ROUND RETURN AIR DUCT THRU STAIRWAY AS SHOWN. DUCTS TO PASS OVER STAIRWAY AS HIGH AS POSSIBLE. REFER TO DETAILS D/M301.
16. RISE 6" ROUND EXHAUST DUCT UP THRU ROOF WITH ROOF CAP.

bhd ARCHITECTS
www.bhdarchitects.com
Phone 801.571.0010
Fax 801.571.0303
Toll Free 888.571.0010
65 East Wadsworth Park Drive
Suite 205 Draper, Utah 84020

LICENSED PROFESSIONAL ENGINEER — DAVID L. HANSEN — May 28,2025 — STATE OF UTAH

Engineered Systems Associates
1355 EAST CENTER
POCATELLO, IDAHO 83201
PHONE: (208) 233-0501
FAX: (208) 233-0529
EMAIL:esa@engsystems.com
ESA JOB NUMBER: 25042

THE CHURCH OF JESUS CHRIST OF LATTER-DAY SAINTS

Nibley 6 & Nibley UT West Stake

Approx. 3410 South 1200 West, Nibley, Utah
41.670809, -111.840775

Owner #: 514-4728
Plan Series: Heritage 24
County Parcel: 03050-0016
BHD #: 2403
Date: 29 Mar 2025

Drawing Issue and Revision Schedule

#	Date	Description
1	29 May 2025	Bid Documents

Equipment Platform Mechanical Plan

M102

5/29/2025 8:45:58 AM

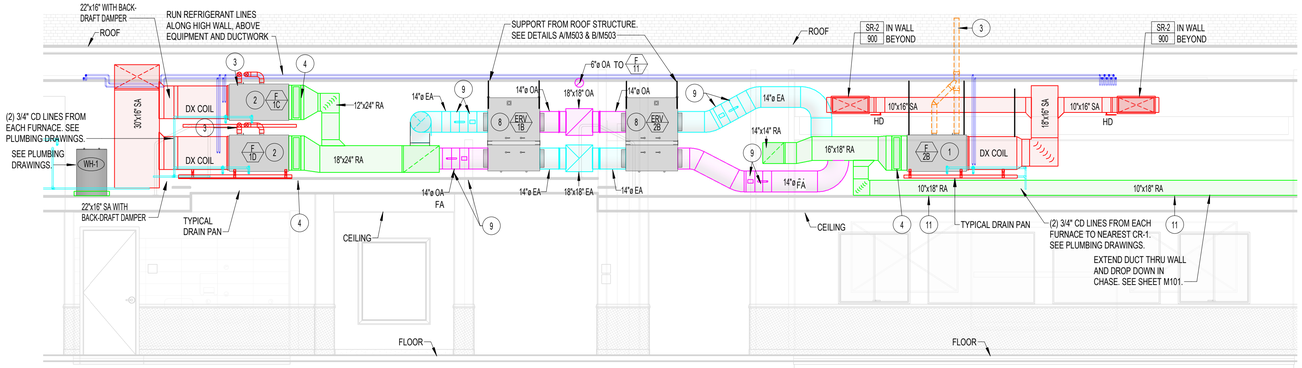

A M301 **MECHANICAL SECTION**
SCALE: 1/4" = 1'-0"

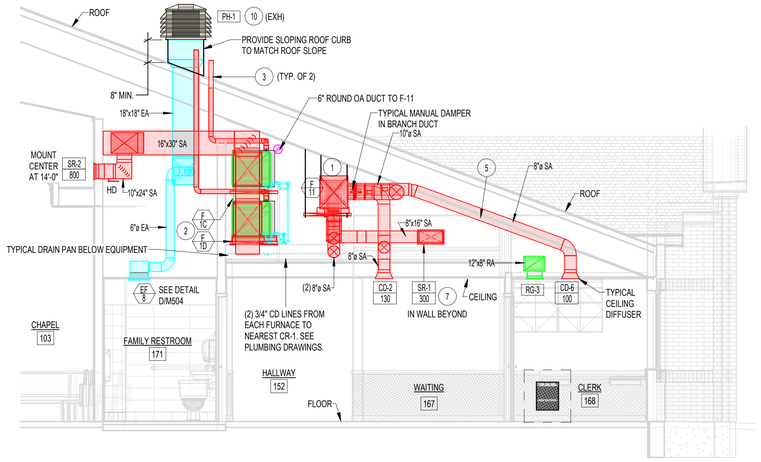

B M301 **MECHANICAL SECTION**
SCALE: 1/4" = 1'-0"

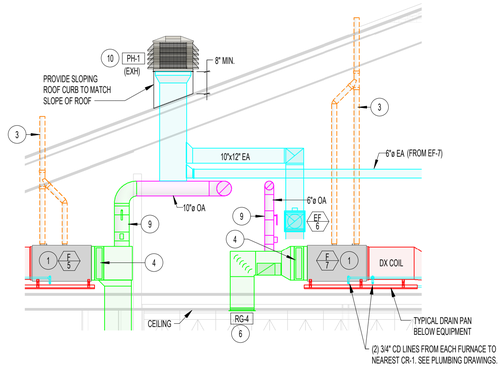

C M301 **MECHANICAL SECTION**
SCALE: 1/4" = 1'-0"

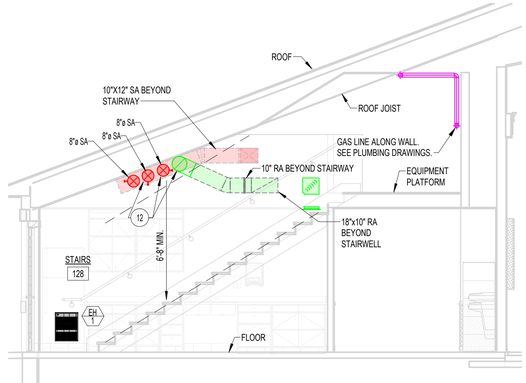

D M301 **MECHANICAL SECTION**
SCALE: 1/4" = 1'-0"

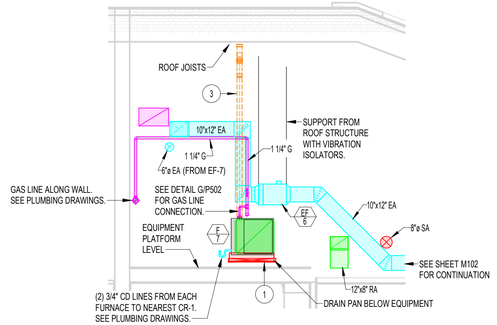

E M301 **MECHANICAL SECTION**
SCALE: 1/4" = 1'-0"

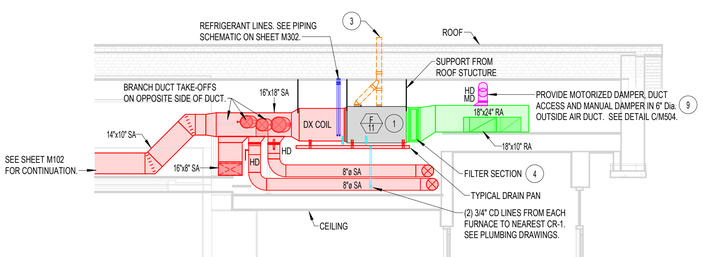

F M301 **MECHANICAL SECTION**
SCALE: 1/4" = 1'-0"

PLAN NOTES:

1. SUSPEND HORIZONTAL FURNACE WITH MATCHING DX COIL ABOVE PLATFORM LEVEL. PROVIDE DRAIN PAN BELOW FURNACE AND COIL. SUPPORT EQUIPMENT FROM ROOF STRUCTURE. REFER TO DETAILS ON SHEET M503. KEEP EQUIPMENT AS CLOSE TO WALL AS POSSIBLE TO ALLOW CLEARANCE.
2. INSTALL (2) HORIZONTAL FURNACES WITH MATCHING DX COIL ON PLATFORM LEVEL. STACK EQUIPMENT ABOVE ONE ANOTHER. PROVIDE SINGLE DRAIN PAN BELOW BOTTOM OF EACH FURNACE AND COIL. SUPPORT EQUIPMENT FROM ROOF STRUCTURE. REFER TO DETAIL D/M502 FOR TYPICAL HORIZONTAL FURNACE INSTALLATION, SUPPORTS AND PIPING CONNECTIONS. KEEP EQUIPMENT AS CLOSE TO WALL AS POSSIBLE TO ALLOW CLEARANCE.
3. RISE (2) 3" ROUND FURNACE VENTS UP THRU ROOF WITH CONCENTRIC TYPE FITTING. REFER TO DETAILS F/M501 AND D/M502 FOR TYPICAL INSTALLATION. DO NOT BLOCK FURNACE ACCESS WITH VENTS. TYPICAL FOR ALL FURNACE SYSTEMS. LOCATE VENTS ALONG BUILDING AXIS AND AWAY FROM ROOF PEAKS AND VALLEYS, AND A MINIMUM OF 10'-0" FROM OUTSIDE AIR INTAKES
4. PROVIDE EXTERNAL FILTER SECTION FOR ALL FURNACE SYSTEMS. REFER TO DETAIL G/M502. FILTER SECTION AND MIXED AIR PLENUM TO MATCH SIZE OF FURNACE OPENING.
5. DROP BRANCH DUCT DOWN WITH ROOF STRUCTURE AS REQUIRED TO CONNECT TO CEILING DIFFUSER. REFER TO SHEET M101 FOR DIFFUSER LOCATIONS. ALL DUCTWORK TO BE RIGID CONSTRUCTION.
6. CEILING DIFFUSER OR RETURN AIR GILLE LOCATED IN CORRIDOR CEILING BELOW DUCT. DROP DUCT (SAME SIZE AS GRILLE UNLESS NOTED OTHERWISE) DOWN THRU PLATFORM FLOOR AND CONNECT TO GRILLE. COORDINATE GRILLE LOCATION WITH FRAMING OF PLATFORM AND WITH LIGHT FIXTURES IN CORRIDOR BELOW.
7. MOUNT SIDEWALL SUPPLY REGISTER HIGH ON THE WALL NEAR CEILING. REFER TO ARCHITECTURAL ELEVATION PLANS FOR EXACT PLACEMENT. REFER TO SHEET M101 FOR CFM REQUIRED.
8. INSTALL ERV UNIT ON EQUIPMENT PLATFORM WITH VIBRATION ISOLATORS. SUPPORT FROM ROOF STRUCTURE. REFER TO ERV SCHEDULE ON SHEET M601 FOR ORIENTATION OF UNITS. CONNECT ERV UNIT TO OUTSIDE AIR DUCT FROM EXTERIOR OF BUILDING. OUTSIDE AIR DUCT TO EACH FURNACE SYSTEM, RELIEF AIR DUCT FROM EACH FURNACE SYSTEM, AND TO EXHAUST AIR DUCT UP TO PENTHOUSE. REFER TO DETAIL H/M502 FOR TYPICAL DUCT CONNECTIONS. COORDINATE WITH ALL OTHER DUCTS AND PIPING.
9. CONNECT OUTSIDE AIR DUCT AND RELIEF AIR DUCT TO MIXED AIR PLENUM DUCT. PROVIDE MOTORIZED DAMPER, DUCT ACCESS DOOR AND MANUAL BALANCING DAMPER IN EACH DUCT. REFER TO FURNACE SCHEDULE ON SHEET M601 FOR MAXIMNUM CFM AMOUNTS OF OUTSIDE AIR / RELIEF AIR REQUIRED AT EACH FURNACE SYSTEM. REFER TO DETAIL C/M504 FOR TYPICAL DAMPER INSTALLATION.
10. MOUNT PENTHOUSE ON SLOPED ROOF WITH SLOPING ROOF CURB. DROP 18" x 18" PLENUM DUCT DOWN THRU ROOF FOR EXHAUST AIR OR OUTSIDE AIR DUCT CONNECTIONS AS SHOWN. COORDINATE PENTHOUSE LOCATIONS WITH ROOF JOISTS AND KEEP AS HIGH AS POSSIBLE TO RIDGE LINE. PENTHOUSES ARE TO BE AT SAME ELEVATION ON ROOF. OUTSIDE AIR AND EXHAUST AIR PENTHOUSES ARE TO 10'-0" MINIMUM APART. REFER TO DETAIL A/M504 FOR TYPICAL INSTALLATION.
11. RUN RETURN DUCT AT FLOOR OF EQUIPMENT PLATFORM, BELOW EQUIPMENT. SUPPORT FROM PLATFORM WITH 2x2 WOOD BLOCKING.
12. RUN (3) 8" ROUND SA DUCTS AND (1) 10" ROUND RA DUCT THRU STAIRWAY AS SHOWN. DUCTS TO PASS OVER STAIRWAY AS HIGH AS POSSIBLE. REFER TO SECTION D/M301.

bhd ARCHITECTS
www.bhdarchitects.com
Phone 801.571.0010
Fax 801.571.0303
Toll Free 888.571.0010
65 East Wadsworth Park Drive
Suite 205 Draper, Utah 84020

REGISTERED PROFESSIONAL ENGINEER — DAVID L. HANSEN — May 28,2025 — STATE OF UTAH

Engineered Systems Associates
1355 EAST CENTER
POCATELLO, IDAHO 83201
PHONE: (208) 233-0501
FAX: (208) 233-0529
EMAIL:esa@engsystems.com

ESA JOB NUMBER: 25042

THE CHURCH OF JESUS CHRIST OF LATTER-DAY SAINTS

Nibley 6 & Nibley UT West Stake

Approx. 3410 South 1200 West, Nibley, Utah
41.670809 , -111.860775

Owner #: 514-4728
Plan Series: Heritage 24
County Parcel: 03:050:0016
BHD #: 2403
Date: 29 Mar 2025

Drawing Issue and Revision Schedule

#	Date	Description
1	29 May 2025	Bid Documents

Mechanical Sections

M301

5/29/2025 8:46:07 AM

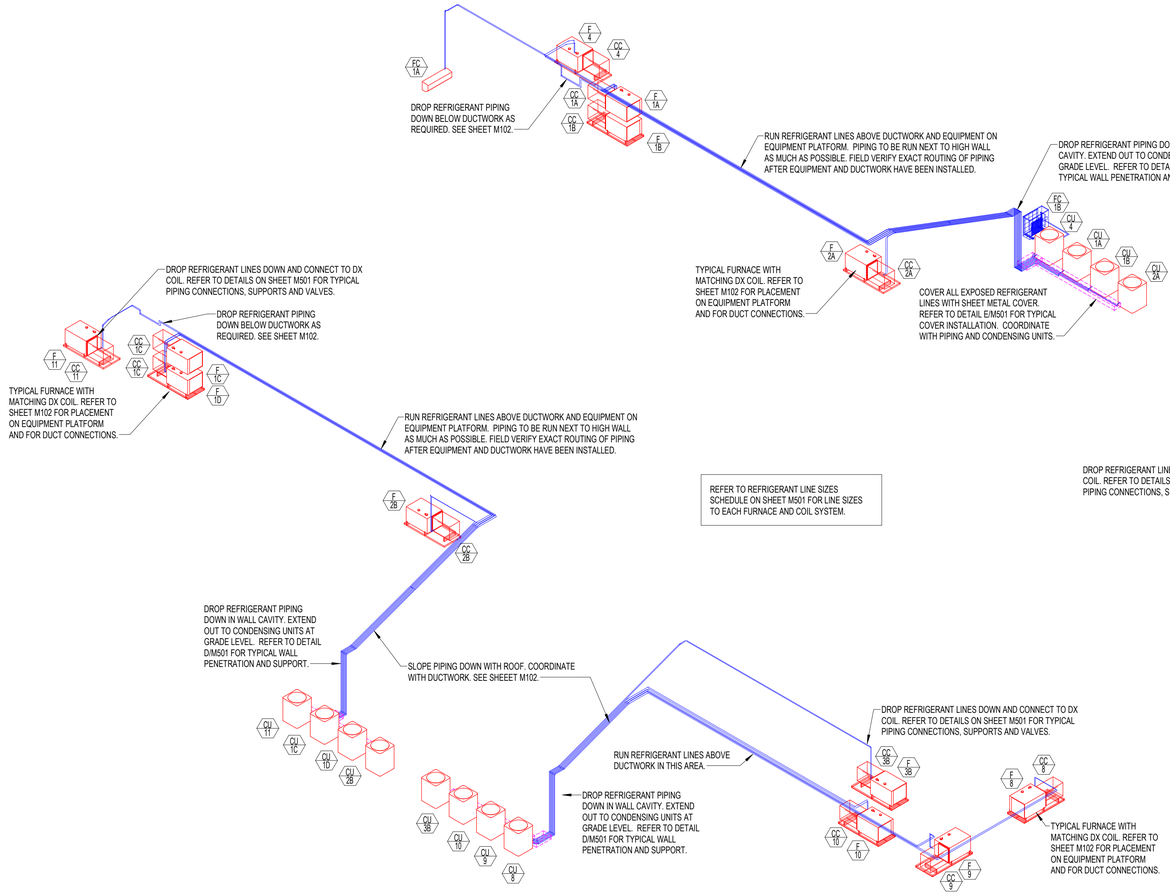

1 M302 **REFRIGERANT PIPING SCHEMATIC**
NO SCALE

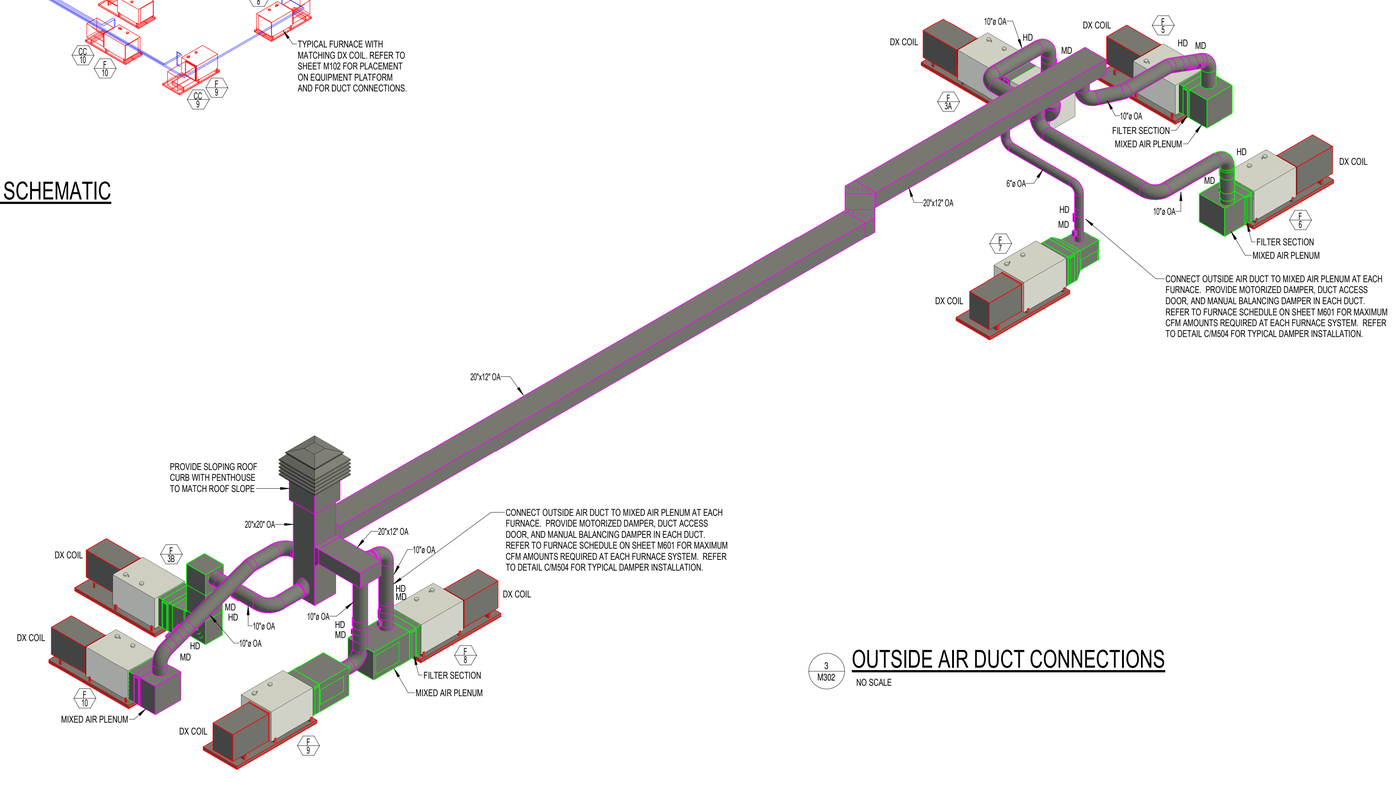

3 M302 **OUTSIDE AIR DUCT CONNECTIONS**
NO SCALE

5/29/2025 8:46:13 AM

bhd ARCHITECTS
www.bhdarchitects.com
Phone 801.571.0010
Fax 801.571.0303
Toll Free 888.571.0010
65 East Wadsworth Park Drive
Suite 205 Draper, Utah 84020

REGISTERED PROFESSIONAL ENGINEER — DAVID L. HANSEN — May 28,2025 — STATE OF UTAH

ESA Engineered Systems Associates
1355 EAST CENTER
POCATELLO, IDAHO 83201
PHONE: (208) 233-0501
FAX: (208) 233-0529
EMAIL:esa@engsystems.com
ESA JOB NUMBER: 25042

THE CHURCH OF JESUS CHRIST OF LATTER-DAY SAINTS

Nibley 6 & Nibley UT West Stake

Approx. 3410 South 1200 West, Nibley, Utah
41.670899 - 111.860775

Owner #: 514-4728
Plan Series: Heritage 24
County Parcel: 03:050:0016
BHD #: 2403
Date: 29 Mar 2025

Drawing Issue and Revision Schedule

#	Date	Description
1	29 May 2025	Bid Documents

Refrigerant Piping Schematic

M302

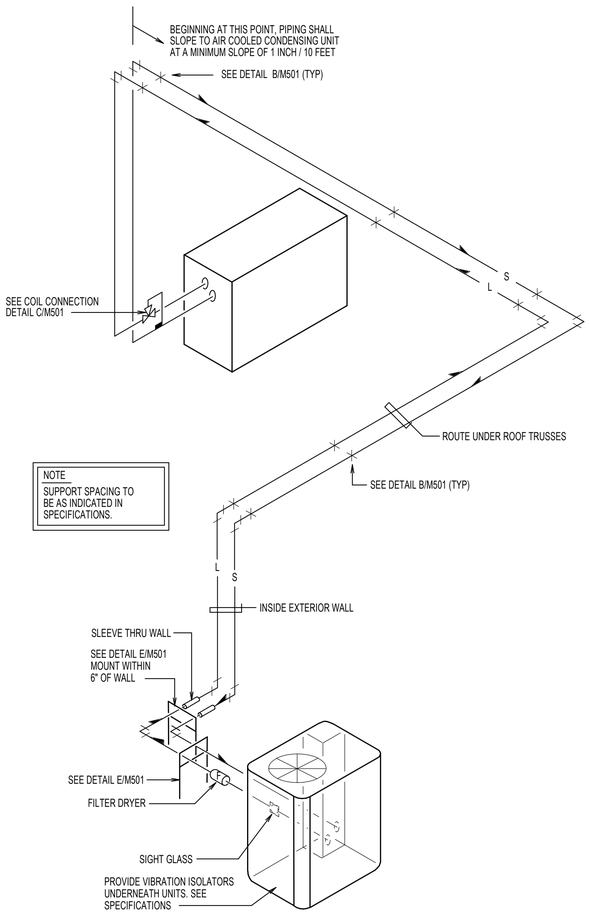

A TYPICAL REFRIGERANT SCHEME

SCALE: NONE

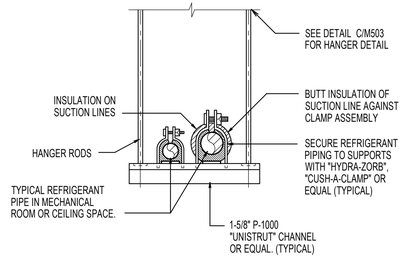

B SUSPENDED REFRIGERANT PIPE SUPPORT

SCALE: NONE

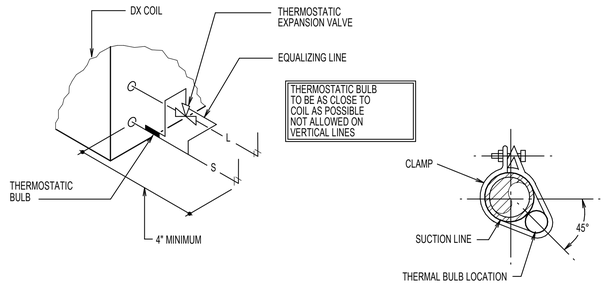

C REFRIGERANT COIL CONNECTION DETAIL

SCALE: NONE

REFRIGERANT PIPING LEGEND

SYMBOL	DESCRIPTION
	EXPANSION VALVE. SEE DETAIL (C M501)
	MOISTURE INDICATING SIGHT GLASS
	FLEXIBLE CONNECTION
	FILTER DRIER
	PIPE SUPPORT. SEE DETAILS (B M501) (D M501)
	EXTERIOR PIPE SUPPORT. SEE DETAIL (E M501)
	TRAP. ONE PIECE FACTORY FABRICATED
	DIRECTION OF SLOPE DOWN
S	SUCTION LINE
L	LIQUID LINE

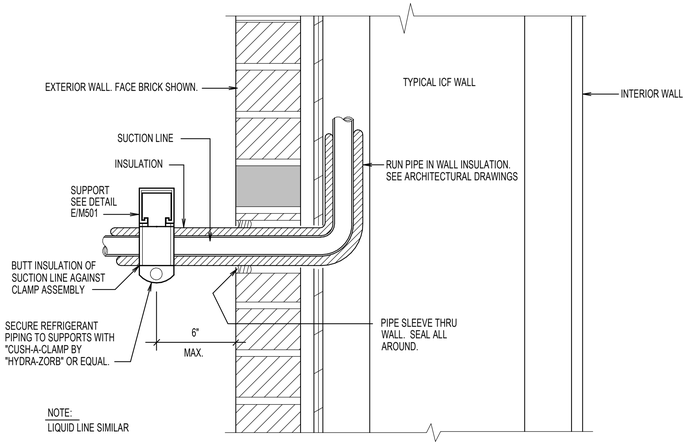

D REFRIGERANT PIPE SUPPORT AT WALL

SCALE: NONE

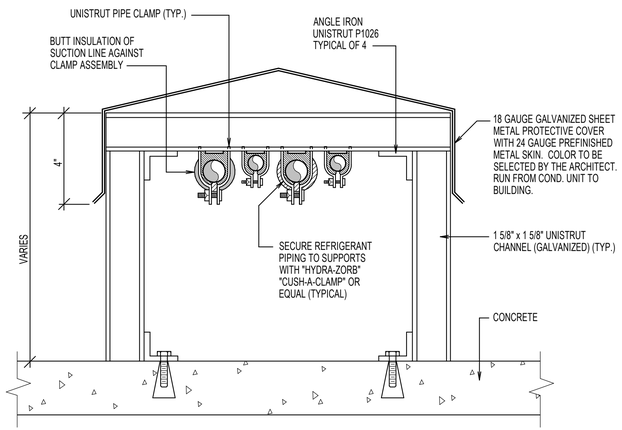

E EXTERIOR REFRIGERANT PIPE SUPPORT DETAIL

SCALE: NONE

REFRIGERANT LINE SIZES

UNIT *	LIQUID	SUCTION	UNIT *	LIQUID	SUCTION
CC 1A	3/8"	7/8"	CC 4	3/8"	7/8"
CC 1B	3/8"	7/8"	CC 5	3/8"	7/8"
CC 1C	3/8"	7/8"	CC 6	3/8"	7/8"
CC 1D	3/8"	7/8"	CC 7	3/8"	7/8"
CC 2A	3/8"	1 1/8"	CC 8	3/8"	7/8"
CC 2B	3/8"	1 1/8"	CC 9	3/8"	7/8"
CC 3A	3/8"	7/8"	CC 10	3/8"	7/8"
CC 3B	3/8"	7/8"	CC 11	3/8"	7/8"

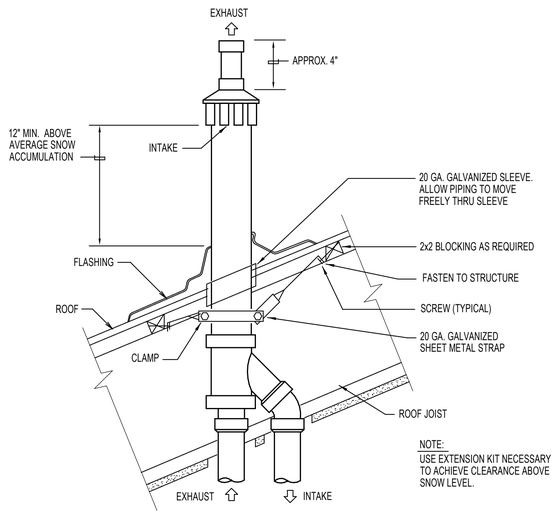

F CONCENTRIC ROOF TERMINATION DETAIL

SCALE: NONE

bhd ARCHITECTS
www.bhdarchitects.com
Phone 801.571.0010
Fax 801.571.0303
Toll Free 888.571.0010
65 East Wadsworth Park Drive
Suite 205 Draper, Utah 84020

Engineered Systems Associates
1355 EAST CENTER
POCATELLO, IDAHO 83201
PHONE: (208) 233-0501
FAX: (208) 233-0529
EMAIL:esa@engsystems.com
ESA JOB NUMBER: 25042

THE CHURCH OF JESUS CHRIST OF LATTER-DAY SAINTS

Nibley 6 & Nibley UT West Stake

Approx. 3410 South 1200 West, Nibley, Utah
41.671809, -111.840775

Date: 29 Mar 2025
BHD #: 2403
County Parcel: 03:050:0016
Plan Series: Heritage 24
Owner #: 514-4728

Drawing Issue and Revision Schedule

#	Date	Description
1	29 May 2025	Bid Documents

Mechanical Details

M501

5/29/2025 8:49:44 AM

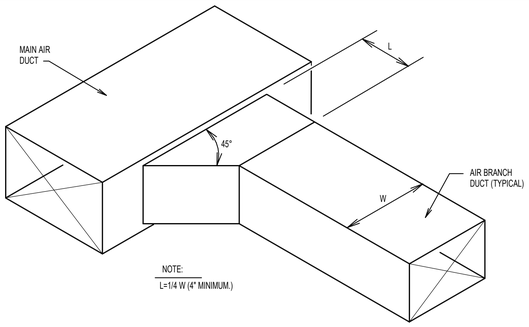

DIMENSION OF LONGEST SIDE, INCHES	SHEET METAL GAUGE (ALL FOUR SIDES)	TRANSVERSE REINFORCING (1)						
		MINIMUM REINFORCING ANGLE SIZE AND MAXIMUM LONGITUDINAL SPACING BETWEEN TRANSVERSE JOINTS AND/OR INTERMEDIATE REINFORCING	AT JOINTS					
			MIN. H. IN.	DRIVE SLIP / PLAIN S SLIP	HEMMED S SLIP	ALTERNT BAR SLIP	REIN-FORCED BAR SLIP	
				RECOM-MENDED GAUGE	RECOM-MENDED GAUGE	RECOM-MENDED GAUGE	RECOM-MENDED GAUGE	
UP THRU 12	26	NONE REQUIRED	1	26	26	24	24	
13 - 18	24	NONE REQUIRED	1	24	24	24	24	
19 - 30	24	1"x1"x1/8" @ 60 IN	1	-	24	24	24	
31 - 36	22	1"x1"x1/8" @ 60 IN	1	-	-	22	22	

(1) TRANSVERSE REINFORCING SIZE IS DETERMINED BY DIMENSION OF SIDE TO WHICH ANGLE IS APPLIED.

(2) LONGITUDINAL JOINTS TO BE PITTSBURGH OR SNAP LOCK TYPE.

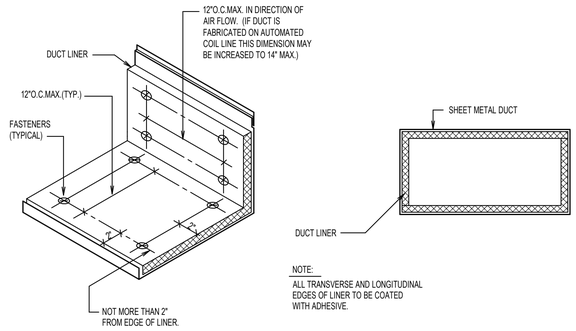

A SUPPLY OR RETURN AIR DUCT BRANCH CONNECTION DETAIL

SCALE: NONE

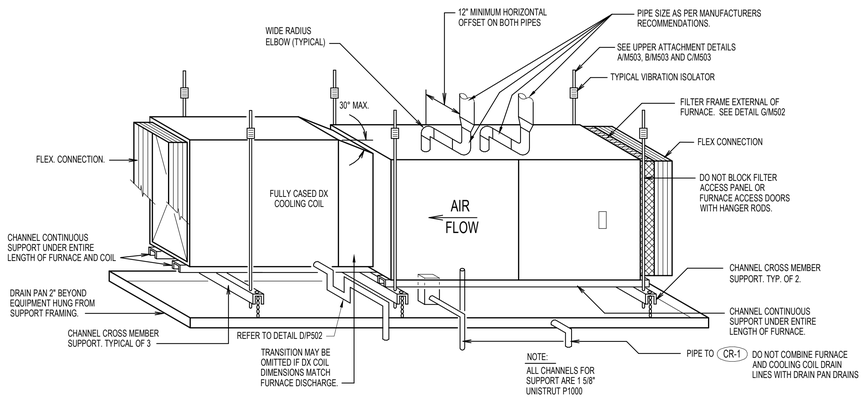

B DUCT CONSTRUCTION DETAIL

SCALE: NONE

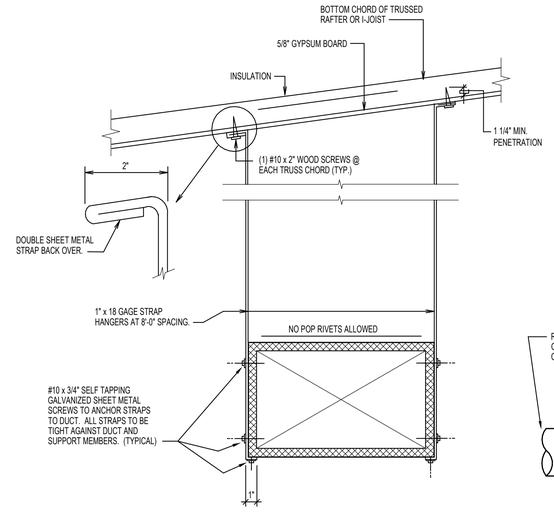

C DUCT LINER DETAIL

SCALE: NONE

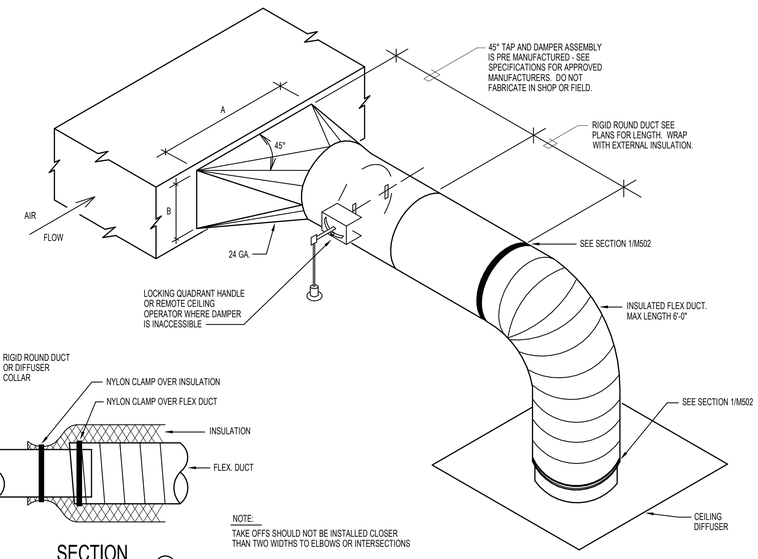

D FURNACE AND CASED DX COOLING COIL

SCALE: NONE

SECTION 1

NOTE:
TAKE OFFS SHOULD NOT BE INSTALLED CLOSER THAN TWO WIDTHS TO ELBOWS OR INTERSECTIONS

NOTE:
AREA OF A x B SHALL BE EQUAL TO 1.5 x AREA BRANCH DUCT

E DUCT STRAP HANGER DETAIL

SCALE: NONE

F HIGH EFFICIENCY SQUARE TO ROUND TAKEOFF DETAIL

SCALE: NONE

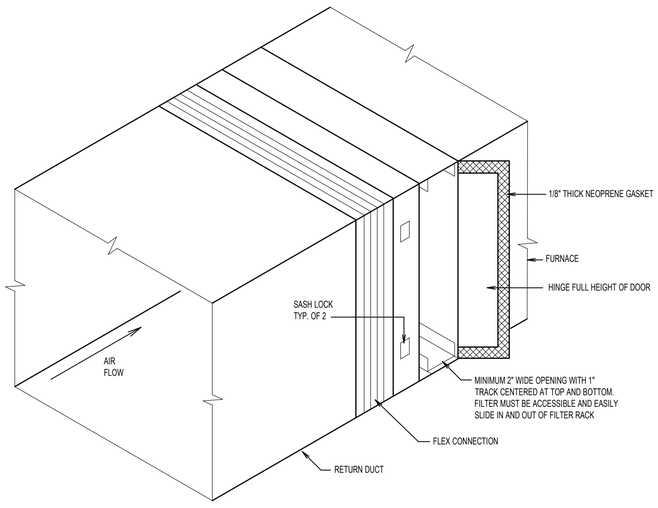

G EXTERNAL FILTER SECTION DETAIL

SCALE: NONE

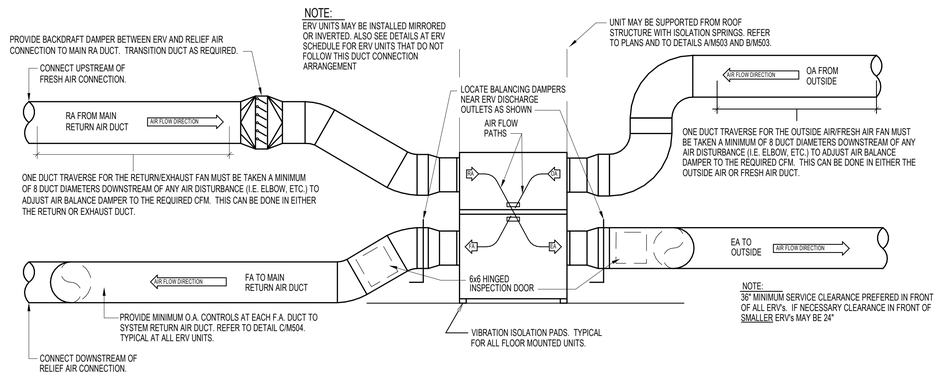

H TYPICAL ERV DAMPERING DETAIL

SCALE: NONE

bhd ARCHITECTS
www.bhdarchitects.com
Phone 801.571.0010
Fax 801.571.0303
Toll Free 888.571.0010
65 East Wadsworth Park Drive
Suite 205 Draper, Utah 84020

REGISTERED PROFESSIONAL ENGINEER
DAVID L. HANSEN
May 28,2025
STATE OF UTAH

ESA Engineered Systems Associates
1355 EAST CENTER
POCATELLO, IDAHO 83201
PHONE: (208) 233-0501
FAX: (208) 233-0529
EMAIL:esa@engsystems.com
ESA JOB NUMBER: 25042

THE CHURCH OF JESUS CHRIST OF LATTER-DAY SAINTS

Nibley 6 & Nibley UT West Stake

Approx. 3410 South 1200 West, Nibley, Utah
41.670809, -111.845775

Owner #: 514-47'28
Plan Series: Heritage 24
County Parcel: 03050000 16
BHID #: 2403
Date: 29 Mar 2025

Drawing Issue and Revision Schedule

#	Date	Description
1	29 May 2025	Bid Documents

Mechanical Details

M502

5/29/2025 8:49:44 AM

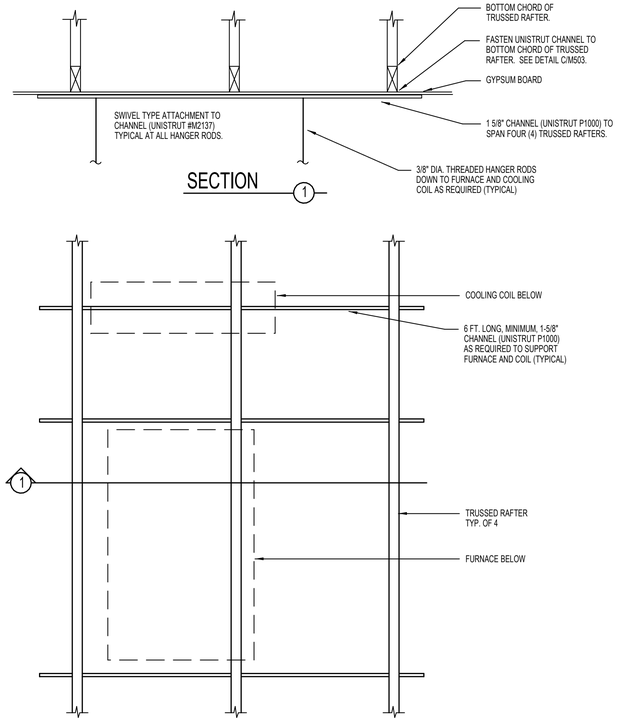

A UPPER SUPPORT DETAIL FOR TRUSSED RAFTERS
SCALE: NONE

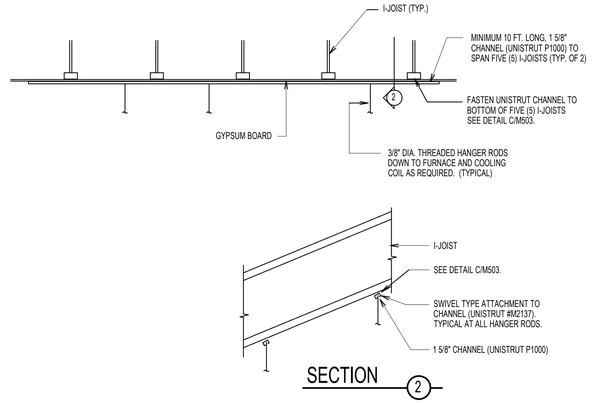

B UPPER SUPPORT DETAIL FOR TRUSSED RAFTER LOCATIONS
SCALE: NONE

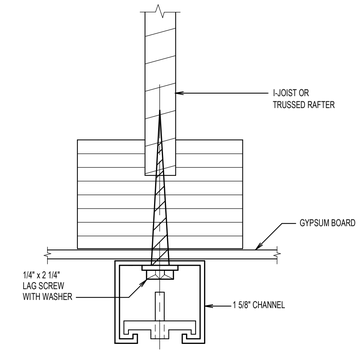

C UPPER ATTACHMENT DETAIL
SCALE: NONE

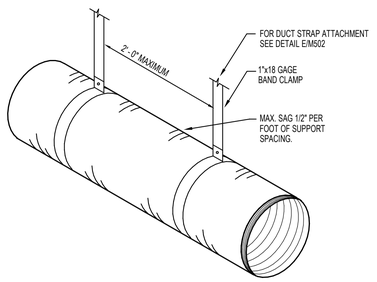

D FLEXIBLE DUCT SUPPORT DETAIL
SCALE: NONE

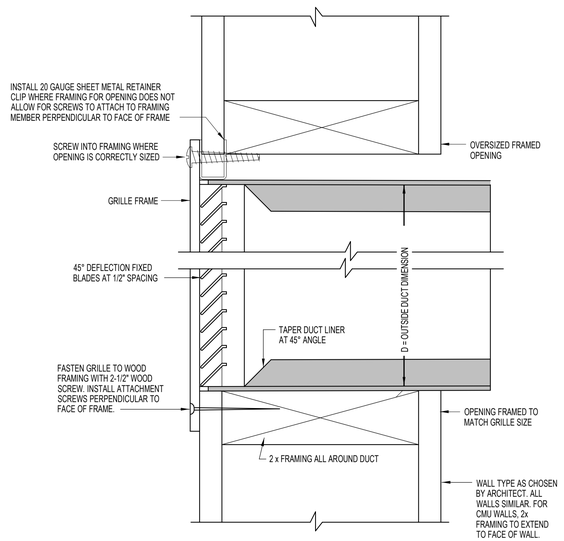

E GRILLE ATTACHMENT DETAIL
NO SCALE

5/29/2025 8:49:44 AM

bhd ARCHITECTS
www.bhdarchitects.com
Phone 801.571.0010
Fax 801.571.0303
Toll Free 888.571.0010
65 East Wadsworth Park Drive
Suite 205 Draper, Utah 84020

REGISTERED PROFESSIONAL ENGINEER
DAVID L. HANSEN
May 28,2025
STATE OF UTAH

Engineered Systems Associates
1355 EAST CENTER
POCATELLO, IDAHO 83201
PHONE: (208) 233-0501
FAX: (208) 233-0529
EMAIL:esa@engsystems.com
ESA JOB NUMBER: 25042

THE CHURCH OF JESUS CHRIST OF LATTER-DAY SAINTS

Nibley 6 & Nibley UT West Stake
Approx. 3410 South 1200 West, Nibley, Utah
41.670809, -111.860775

BHD #: 2403
County Parcel: 03:050:0016
Plan Series: Heritage 24
Owner #: 514-4728
Date: 29 Mar 2025

Drawing Issue and Revision Schedule

#	Date	Description
1	29 May 2025	Bid Documents

Mechanical Details

M503

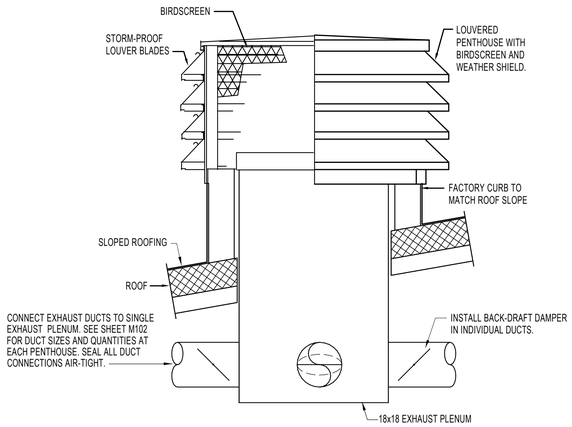

A DUCT CONNECTION AT PENTHOUSE

NO SCALE (OUTSIDE AIR PENTHOUSE SIMILAR)

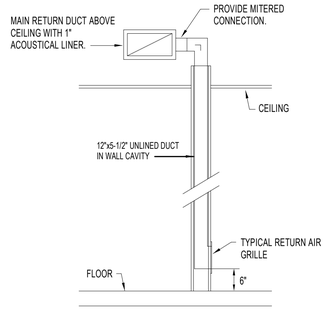

B LOW SIDEWALL RETURN GRILLE DETAIL

NO SCALE

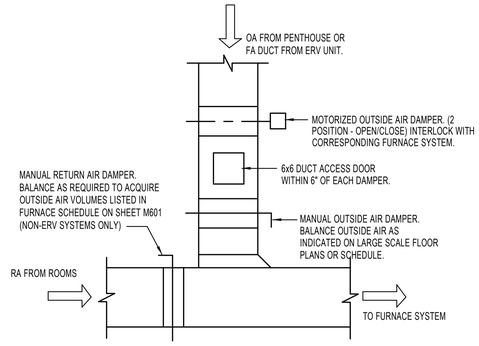

C TYPICAL OUTSIDE AIR DUCT DETAIL

NO SCALE

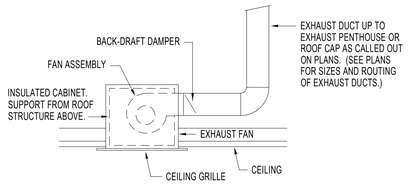

D CEILING MOUNTED EXHAUST FAN DETAIL

NO SCALE

5/29/2025 8:49:44 AM

bhd ARCHITECTS
www.bhdarchitects.com
Phone 801.571.0010
Fax 801.571.0303
Toll Free 888.571.0010
65 East Wadsworth Park Drive
Suite 205 Draper, Utah 84020

REGISTERED PROFESSIONAL ENGINEER — DAVID L. HANSEN — May 28,2025 — STATE OF UTAH

Engineered Systems Associates
1355 EAST CENTER
POCATELLO, IDAHO 83201
PHONE: (208) 233-0501
FAX: (208) 233-0529
EMAIL:esa@engsystems.com
ESA JOB NUMBER: 25042

THE CHURCH OF JESUS CHRIST OF LATTER-DAY SAINTS

Nibley 6 & Nibley UT West Stake

Approx. 3410 South 1200 West, Nibley, Utah
41.670899 , -111.860775

Date: 29 Mar 2025
BHD #: 2403
County Parcel: 03:050:0016
Plan Series: Heritage 24
Owner #: 514-4728

Drawing Issue and Revision Schedule

#	Date	Description
1	29 May 2025	Bid Documents

Mechanical Details

M504

AIR COOLED CONDENSING UNIT SCHEDULE

MARK (3)	MIN. NOMINAL SIZE (TONS) (2)	MINIMUM CIRCUIT AMPACITY	MCOP	CHAR. (5)(6)	REMARKS (1)(4)
CU 1A	4	27.9	50	208/60/1	WITH 0°F LOW AMBIENT HARD START KIT
CU 1B	4	27.9	50	208/60/1	WITH 0°F LOW AMBIENT HARD START KIT
CU 1C	4	27.9	50	208/60/1	WITH 0°F LOW AMBIENT HARD START KIT
CU 1D	4	27.9	50	208/60/1	WITH 0°F LOW AMBIENT HARD START KIT
CU 2A	5	34.6	60	208/60/1	WITH 0°F LOW AMBIENT HARD START KIT
CU 2B	5	34.6	60	208/60/1	WITH 0°F LOW AMBIENT HARD START KIT
CU 3A	5	34.6	60	208/60/1	WITH 0°F LOW AMBIENT HARD START KIT
CU 3B	5	34.6	60	208/60/1	WITH 0°F LOW AMBIENT HARD START KIT
CU 4	4	27.9	50	208/60/1	WITH 0°F LOW AMBIENT HARD START KIT
CU 5	3 1/2"	25.3	40	208/60/1	WITH 0°F LOW AMBIENT HARD START KIT
CU 6	3	21.9	35	208/60/1	WITH 0°F LOW AMBIENT HARD START KIT (7)
CU 7	3 1/2"	25.3	40	208/60/1	WITH 0°F LOW AMBIENT HARD START KIT
CU 8	4	27.9	50	208/60/1	WITH 0°F LOW AMBIENT HARD START KIT
CU 9	3	21.9	35	208/60/1	WITH 0°F LOW AMBIENT HARD START KIT (7)
CU 10	3 1/2	25.3	40	208/60/1	WITH 0°F LOW AMBIENT HARD START KIT
CU 11	4	27.9	50	208/60/1	WITH 0°F LOW AMBIENT HARD START KIT

(1) REFRIGERANT = R-410a
(2) AT DESIGN CONDITIONS AND 95 Deg. F ENTERING AIR TEMPERATURE TO CONDENSER.
(3) COIL MARKS CORRESPOND WITH COOLING COIL AND FURNACE MARKS.
(4) SEE SPECIFICATIONS FOR APPROVED MANUFACTURERS. MINIMUM 13.4 SEER 2.
(5) ELECTRICAL CHARACTERISTICS - COMPRESS: 208V / 1 PHASE / 60 HZ
(6) COORDINATE ACTUAL ELECTRICAL RATINGS OF UNIT SUPPLIED WITH DIVISION 26.
(7) TO BE FURNISHED WITH 2 STAGE HEATING AND COOLING OPTION.

COOLING COIL SCHEDULE (1)(2)

MARK	MIN. REQ'D. CAP. TOT.MBH	MIN. REQ'D. CAP. SEN.MBH	COND.ENT.EVAP. DB° F	COND.ENT.EVAP. WB° F	S.C.F.M.	MAX. PR. DR. IN.W.G. (3)	POSITION	REMARKS (4)(6)
CC 1A	49.2	40.4	79	66	1600	0.22	HORIZONTAL	4 TON NOMINAL (5)
CC 1B	49.2	40.4	79	66	1600	0.22	HORIZONTAL	4 TON NOMINAL (5)
CC 1C	49.2	40.4	79	66	1600	0.22	HORIZONTAL	4 TON NOMINAL (5)
CC 1D	49.2	40.4	79	66	1600	0.22	HORIZONTAL	4 TON NOMINAL (5)
CC 2A	61.1	40.9	79	66	1800	0.29	HORIZONTAL	5 TON NOMINAL (5)
CC 2B	61.1	40.9	79	66	1800	0.29	HORIZONTAL	5 TON NOMINAL (5)
CC 3A	61.1	40.9	79	66	1800	0.29	HORIZONTAL	5 TON NOMINAL (5)
CC 3B	61.1	40.9	79	66	1800	0.29	HORIZONTAL	5 TON NOMINAL (5)
CC 4	49.2	40.2	79	66	1600	0.22	HORIZONTAL	4 TON NOMINAL (5)
CC 5	42.0	35.2	79	66	1400	0.29	HORIZONTAL	3 1/2 TON NOMINAL (5)
CC 6	36.0	32.4	79	66	1200	0.22	HORIZONTAL	3 TON NOMINAL (5)
CC 7	42.0	35.2	79	66	1400	0.29	HORIZONTAL	3 1/2 TON NOMINAL (5)
CC 8	49.2	40.4	79	66	1600	0.22	HORIZONTAL	4 TON NOMINAL (5)
CC 9	36.0	32.4	79	66	1200	0.22	HORIZONTAL	3 TON NOMINAL (5)
CC 10	42.0	35.2	79	66	1400	0.29	HORIZONTAL	3 1/2 TON NOMINAL (5)
CC 11	49.2	40.4	79	66	1600	0.22	HORIZONTAL	4 TON NOMINAL (5)

(1) COIL MARKS CORRESPOND WITH CONDENSING UNIT AND FURNACE MARKS.
(2) COMPLETE WITH FACTORY COIL BOX AND COIL.
(3) WET COIL
(4) USE NEXT LARGE SIZE COIL IF NECESSARY TO MEET MAX. PRESSURE DROP REQUIREMENTS.
(5) HORIZONTAL COIL.
(6) SEE SPECIFICATIONS FOR APPROVED MANUFACTURERS.

FURNACE SCHEDULE (2)(7)

MARK	MIN.REQ'D OUTPUT BTU/HR (1)	MINIMUM A.C.F.M.	MINIMUM OUTSIDE AIR	EXT. S.P. IN.W.G.	MOTOR (3) MIN. H.P.	MOTOR (3) SPEED (5)	REMARKS
F 1A	93,000	1600	420	0.60	1/2	MED. HIGH (4)	110,000 BTU INPUT (6)
F 1B	93,000	1600	420	0.60	1/2	MED. HIGH (4)	110,000 BTU INPUT (6)
F 1C	93,000	1600	420	0.60	1/2	MED. HIGH (4)	110,000 BTU INPUT (6)
F 1D	93,000	1600	420	0.60	1/2	MED. HIGH (4)	110,000 BTU INPUT (6)
F 2A	112,000	1800	840	0.60	1	MED. HIGH (4)	120,000 BTU INPUT (6)
F 2B	112,000	1800	840	0.60	1	MED. HIGH (4)	120,000 BTU INPUT (6)
F 3A	112,000	1800	840	0.60	1	MED. HIGH (4)	120,000 BTU INPUT (6)
F 3B	112,000	1800	840	0.60	1	MED. HIGH (4)	120,000 BTU INPUT (6)
F 4	93,000	1600	200	0.60	1/2	MED. HIGH (4)	110,000 BTU INPUT (6)
F 5	93,000	1400	200	0.60	1/2	MED. HIGH (4)	110,000 BTU INPUT (6)
F 6	68,000	1200	350	0.60	1/3	MED. HIGH (4)	88,000 BTU INPUT (6)(8)
F 7	93,000	1400	200	0.60	1/2	MED. HIGH (4)	110,000 BTU INPUT (6)
F 8	93,000	1600	400	0.60	1/2	MED. HIGH (4)	110,000 BTU INPUT (6)
F 9	68,000	1200	350	0.60	1/3	MED. HIGH (4)	88,000 BTU INPUT (6)(8)
F 10	93,000	1400	400	0.60	1/2	MED. HIGH (4)	110,000 BTU INPUT (6)
F 11	93,000	1600	300	0.60	1/2	MED. HIGH (4)	110,000 BTU INPUT (6)

(1) BTU/HR OUTPUT AT SEA LEVEL RATING
(2) FURNACE MARKS CORRESPOND WITH CONDENSING UNIT AND COOLING COIL MARKS.
(3) ELECTRICAL CHARACTERISTICS - MOTOR: 120V / 1 PHASE / 60 HZ
(4) MAY VARY ACCORDING TO MANUFACTURER. INSTALL NECESSARY JUMPERS SO THAT FAN OPERATES ONLY AT COOLING SPEED WHENEVER THE FAN CIRCUIT IS ENERGIZED.
(5) SET FAN MOTOR SPEED TAP TO LOWEST POSSIBLE SETTING TO ACHIEVE DESIGN AIR FLOW.
(6) HORIZONTAL UNIT WITH ATTACHED DX COIL.
(7) SEE SPECIFICATIONS FOR APPROVED MANUFACTURERS. - 92% MINIMUM AFUE.
(8) FURNACE TO BE FURNISHED WITH 2 STAGE HEATING AND COOLING OPTION.

ENERGY RECOVERY VENTILATOR

MARK	CFM	ELECTRICAL FLA	MCA	MCOP	H.P.	VOLTS	HERTZ	PHASE	REMARKS
ERV 1A	840	18.0	20.3	25	(2) 3/4	115	60	1	(1)(2)
ERV 1B	840	18.0	20.3	25	(2) 3/4	115	60	1	(1)(2)
ERV 2A	840	18.0	20.3	25	(2) 3/4	120	60	1	(1)(2)
ERV 2B	840	18.0	20.3	25	(2) 3/4	120	60	1	(1)(2)

(1) RENEWAIRE MODEL HE1XINV. TWO 0.75 HP FANS. 25 MAX. FUSE SIZE.
(2) CONNECT DUCTWORK AS SHOWN IN DETAIL TO THE RIGHT.

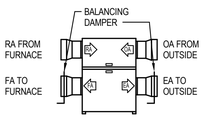

CONNECT MATCHING DUCTS TO LABELED CONNECTIONS

ERV-UNITS 1B, 2A

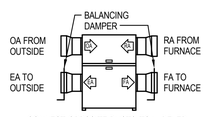

CONNECT OPPOSITE DUCTS TO LABELED CONNECTIONS

ERV-UNITS 1A, 2B

NOTE: PROVIDE BACKDRAFT DAMPER ON FA DUCT BEFORE CONNECTING TO MAIN RETURN AIR DUCT. TYPICAL ALL ERV UNITS.

ELECTRIC HEATER SCHEDULE

MARK	SERVES ROOM	WATTS	CHAR.	AMPS	REMARKS (1)
EH 1	128	2000	208V / 1 PHASE / 60HZ	8.5	QMARK MODEL AWH-4204 WITH SM-1 SEMI-RECESSED FRAME
EH 2	127	2000	208V / 1 PHASE / 60HZ	8.5	QMARK MODEL AWH-4204 WITH SM-1 SEMI-RECESSED FRAME
EH 3	143	2000	208V / 1 PHASE / 60HZ	8.5	QMARK MODEL AWH-4204 WITH SM-1 SEMI-RECESSED FRAME
EH 4	114	2000	208V / 1 PHASE / 60HZ	8.5	QMARK MODEL AWH-4204 WITH SM-1 SEMI-RECESSED FRAME
EH 5	119	2000	208V / 1 PHASE / 60HZ	8.5	QMARK MODEL AWH-4204 WITH SM-1 SEMI-RECESSED FRAME
EH 6	165	2000	208V / 1 PHASE / 60HZ	8.5	QMARK MODEL AWH-4204 WITH SM-1 SEMI-RECESSED FRAME
EH 7	169	2000	208V / 1 PHASE / 60HZ	8.5	QMARK MODEL AWH-4204 WITH SM-1 SEMI-RECESSED FRAME

(1) SEE SPECIFICATIONS FOR OTHER APPROVED MANUFACTURERS.

NOTES:

1- THE MECHANICAL CONTRACTOR SHALL VERIFY MOTOR VOLTAGES WITH THE ELECTRICAL DRAWINGS BEFORE ORDERING MOTORIZED EQUIPMENT AND CONTROLS. STANDARD 200 VOLT FOR 208 VOLT MOTOR NAME PLATE VOLTAGE SHALL BE NEMA STANDARD 230 VOLT FOR THREE PHASE SYSTEM AND SHALL BE NEMA SYSTEM. STARTER HEATERS 240 VOLT THREE PHASE OR SINGLE PHASE INSTALLED SHALL BE COORDINATED WITH THE NAME PLATE DATA.

2- S.C.F.M. LISTED IS STANDARD AIR.

FAN COIL SPLIT SYSTEM A/C UNIT SCHEDULE

INDOOR UNIT SYM.	CFM	BTU	CHAR	MCA		OUTDOOR UNIT SYM.	BTU	MCA	SEER	CHAR	MANUFACTURER	REFRIG. LINES LIQUID	REFRIG. LINES SUCTION
FC 1A	300-400	18,000	208/60/1	1	MITSUBISHI MODEL PKA-A18HA7	FC 1B	18,000	20	15.3	208/60/1	MITSUBISHI PUZA18NHA7 (HEAT PUMP) WITH LOW AMBIENT 'HARD-START' KIT	1/4"	1/2"

1- FIELD VERIFY ACTUAL LENGTHS OF REFRIGERANT PIPING TO BE INSTALLED AND SIZE PIPING ACCORDING TO MANUFACTURER'S INSTRUCTIONS
2- SYSTEM TO BE PROVIDED WITH CURRENT REFRIGERANT (R32 OR R545B).
3- SYSTEM TO BE SUPPLIED WITH LOW AMBIENT (HARD-START) KIT.
4- MOUNT UNIT ON 14" HIGH (MINIMUM) ROOF CURB AND DROP PIPING DOWN THRU CURB WITH CPVC 180 DEGREE GOOSENECK PIPE.

bhd ARCHITECTS
www.bhdarchitects.com
Phone 801.571.0010
Fax 801.571.0303
Toll Free 888.571.0010
65 East Wadsworth Park Drive
Suite 205 Draper, Utah 84020

REGISTERED PROFESSIONAL ENGINEER — DAVID L. HANSEN — May 28,2025 — STATE OF UTAH

ESA Engineered Systems Associates
1355 EAST CENTER
POCATELLO, IDAHO 83201
PHONE: (208) 233-0501
FAX: (208) 233-0529
EMAIL:esa@engsystems.com
ESA JOB NUMBER: 25042

THE CHURCH OF JESUS CHRIST OF LATTER-DAY SAINTS

Nibley 6 & Nibley UT West Stake

Approx. 3410 South 1200 West, Nibley, Utah
41.670809 - 111.860775

Owner #: 514-4728
Plan Series: Heritage 24
County Parcel: 03:050:0016
BHD #: 2403
Date: 29 Mar 2025

Drawing Issue and Revision Schedule

#	Date	Description
1	29 May 2025	Bid Documents

Mechanical Schedules

M601

5/29/2025 8:49:44 AM

EXHAUST FAN SCHEDULE (2)(3)(4)(5)

MARK	SERVES ROOM	MIN. (1) A.C.F.M.	STATIC PRESSURE IN. W.G.	MINIMUM WATTS	CONTROL	REMARKS
EF-1	FAMILY RESTROOM 170	140	.38"	87 W	WITH LIGHTS	CEILING MOUNT
EF-2	FAMILY RESTROOM 113	140	.38"	87 W	WITH LIGHTS	CEILING MOUNT
EF-3	SERVING AREA 129	150	.38"	127 W	WALL SWITCH	CEILING MOUNT
EF-4	CUSTODIAN 109	80	.38"	87 W	WITH LIGHTS	CEILING MOUNT
EF-5	MOTHER'S ROOM 149	80	.38"	87 W	WITH LIGHTS	CEILING MOUNT
EF-6	MEN & WOMEN REST ROOM AND FONT 138 139 141	950	.50"	1/8 HP	WITH LIGHTS	DIRECT DRIVE IN-LINE FAN
EF-7	FAMILY RESTROOM 140	140	.38"	87 W	WITH LIGHTS	CEILING MOUNT
EF-8	FAMILY RESTROOM 150	140	.38"	87 W	WITH LIGHTS	CEILING MOUNT

(1) SET BALANCE DAMPERS TO CFM LISTED ON SCHEDULE.
(2) PROVIDE BACK-DRAFT DAMPER.
(3) CONTROL BY DIVISION 26.
(4) ELECTRICAL CHARACTERISTICS - COMPRESS: 120V / 1 PHASE / 60 HZ
(5) SEE SPECIFICATIONS FOR APPROVED MANUFACTURERS.

DIFFUSER SCHEDULE (2)(3)(4)

MARK	C.F.M. RANGE (1)	DIFFUSER SIZE	NECK CONN.	BLOW	PATTERN	AIR DIST./SIDE A (%)	AIR DIST./SIDE B (%)
CD-1 CFM	50 - 199	9 x 9	8" Dia.	3 WAY	A B A B	38	31
CD-2 CFM	50 - 199	9 x 9	8" Dia.	4 WAY	A B A B	25	25
CD-4 CFM	200-400	12 x 12	10" Dia.	4 WAY	A B A B	25	25
CD-5 CFM	50-199	24 x 24 MODULE 12 x 12 GRILLE	8" Dia.	3 WAY	A B A B	38	31
CD-6 CFM	50-199	24 x 24 MODULE 12 x 12 GRILLE	8" Dia.	4 WAY	A B A B	25	25
CD-7 CFM	200-400	24 x 24 MODULE 12 x 12 GRILLE	10" Dia.	4 WAY	A B A B	25	25

(1) MAXIMUM NC = 25 AT MAXIMUM CFM NOTED.
(2) DESIGN BASED ON TITUS TDC TYPE 6. SEE SPECIFICATIONS FOR OTHER APPROVED MANUFACTURERS.
(3) SEE SPECIFICATIONS FOR APPROVED MANUFACTURERS.
(4) FINISH SHALL BE OFF-WHITE ENAMEL.

REGISTER, LOUVER & GRILLE SCHEDULE (2)

MARK	TYPE	SERVICE	CFM RANGE (1)	NOMINAL SIZE	REMARKS (3)
SR-1	SIDEWALL (5)	SA	300	16 x 8	(9)
SR-2	SIDEWALL (5)	SA	800 - 900	24 x 10	(9)
RG-1	LOW SIDEWALL (5)(6)	RA	150	12 x 6	SERVICED BY 12 x 5-1/2 UNLINED R.A. DUCT IN WALL (10)
RG-2	CEILING (4)	RA	100 - 300	10 x 10	
RG-3	CEILING (4)	RA	50-300	18 x 10 GRILLE 24x12 MODULE	COORDINATE WITH CEILING GRID AND LIGHT FIXTURES WHERE APPLICABLE. (13)
RG-4	CEILING (4)	RA	400-800	18 x 18	COORDINATE WITH CEILING STRUCTURE AND LIGHT FIXTURES WHERE APPLICABLE.
RG-5	LOW SIDEWALL (5)(6)	RA	1200	18 x 24	SERVICED BY 18 x 12 R.A. DUCT IN CHASE (10)(12)
RG-6	LOW SIDEWALL (5)(6)	RA	800-900	18 x 24	SERVICED BY 18 x 10 R.A. DUCT IN CHASE (10)(13)
RG-7	LOW SIDEWALL (5)(6)	RA	1600	42 x 24	SERVICED BY 18 x 16 R.A. DUCT IN CHASE (10)(13)
ER-1	CEILING (4)	EA	50-300	10 x 10	COORDINATE WITH LIGHT FIXTURES WHERE APPLICABLE. (14)
PH-1	PENTHOUSE	EA	1000	18 x 18 x 18	COORDINATE WITH ROOF PEAKS AND VALLEYS (7)(8)(11)

(1) MAXIMUM NC = 25 AT MAXIMUM CFM NOTED.
(2) DESIGN BASED ON TITUS GRILLES. SEE SPECIFICATIONS FOR OTHER APPROVED MANUFACTURERS.
(3) SEE SPECIFICATIONS FOR APPROVED MANUFACTURERS.
(4) FINISH SHALL BE OFF-WHITE ENAMEL.
(5) BAKED ENAMEL FINISH WITH COLOR AS DIRECTED BY ARCHITECT.
(6) RETURN AIR GRILLE TO BE MOUNTED 6" FROM FLOOR TO BOTTOM EDGE OF GRILLE.
(7) BAKED ENAMEL FINISH. COLOR TO MATCH ROOF COLOR AS DIRECTED BY THE ARCHITECT.
(8) PROVIDE ALUMINUM BIRD SCREENS.
(9) SET REGISTER BLADES FOR 15° Deg. UPWARD DEFLECTION.
(10) BLADE ORIENTATION SHALL BE HORIZONTAL.
(11) MAXIMUM ACCEPTABLE FACE VELOCITY THROUGH FREE AREA: 400 FPM
(12) BLADE ORIENTATION SHALL BE WITH SHORT DIMENSION.
(13) BLADE ORIENTATION SHALL BE WITH LONG DIMENSION.
(14) WITH OPPOSED BLADE DAMPER IN GRILLE

DESIGN CONDITIONS	OUTSIDE	INSIDE
WINTER	10°F	70°F
SUMMER	100°F db, 63°F wb	75°F db, 64°F wb

SALEM, UTAH ELEVATION 4613 FT.

LEGEND

SYMBOL	DESCRIPTION	SYMBOL	DESCRIPTION	SYMBOL	DESCRIPTION
L	BRANCH DUCT TAKE-OFF SEE DETAIL A/M502		BDD - (BACK DRAFT DAMPER)	SA	SUPPLY AIR
	SINGLE THICKNESS TURNING VANES		MANUAL VOLUME DAMPER	RA	RETURN AIR/RELIEF AIR TO ERV's
	DUCT TRANSITION		FLEX. CONNECTION 6'-0" MAX LENGTH - SEE DETAIL F/M502	OA	OUTSIDE AIR
	MOTORIZED DAMPER	SD-1	DUCT SMOKE DETECTOR. INSTALL 12x12 ACCESS DOOR AT ALL LOCATIONS	TA	TRANSFER AIR
				FA	FRESH AIR (ERV LABEL)
				EA	EXHAUST AIR
				AF	ABOVE FLOOR
				SL UP	SLOPE UP OR DN

5/29/2025 8:49:45 AM

bhd ARCHITECTS
www.bhdarchitects.com
Phone 801.571.0010
Fax 801.571.0303
Toll Free 888.571.0010
65 East Wadsworth Park Drive
Suite 205 Draper, Utah 84020

REGISTERED PROFESSIONAL ENGINEER — DAVID L. HANSEN — No. — May 28,2025 — STATE OF UTAH

Engineered Systems Associates
1355 EAST CENTER
POCATELLO, IDAHO 83201
PHONE: (208) 233-0501
FAX: (208) 233-0529
EMAIL:esa@engsystems.com

ESA JOB NUMBER: 25042

THE CHURCH OF JESUS CHRIST OF LATTER-DAY SAINTS

Nibley 6 & Nibley UT West Stake

Approx. 3410 South 1200 West, Nibley, Utah
41.672809, -111.840775

BID #: 2403
County Parcel: 03050:0016
Plan Series: Heritage 24
Owner #: 514-4728
Date: 29 Mar 2025

Drawing Issue and Revision Schedule

#	Date	Description
1	29 May 2025	Bid Documents

Mechanical Schedules

M602

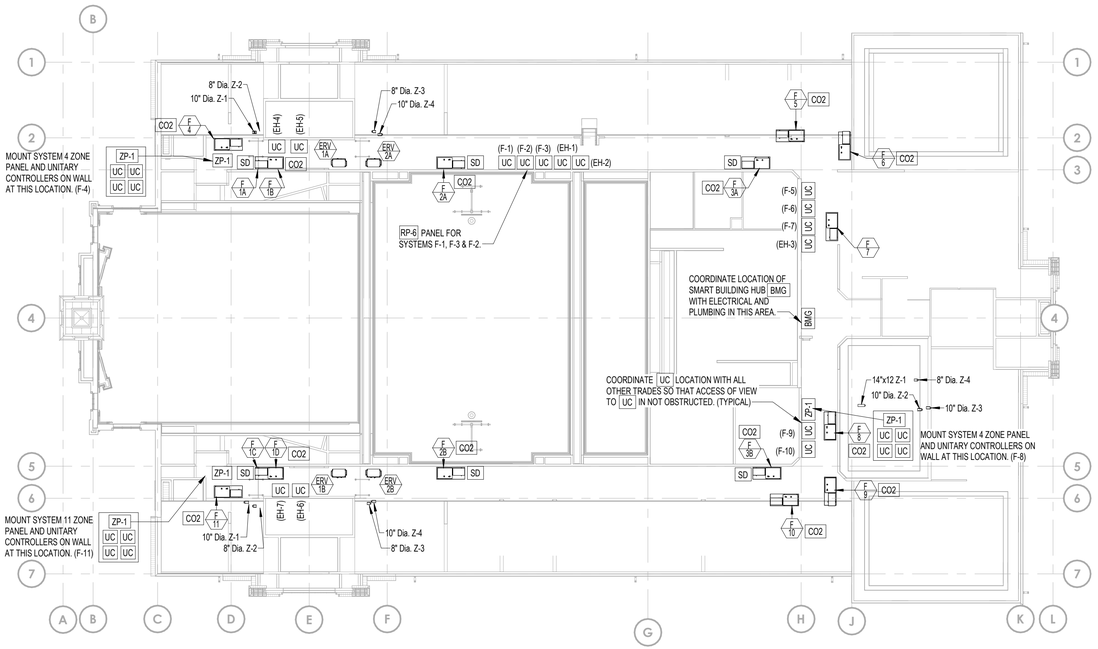

B ME101 EQUIPMENT PLATFORM AUTOMATIC TEMPEERATURE CONTROL PLAN

SCALE: 1/16" = 1'-0"

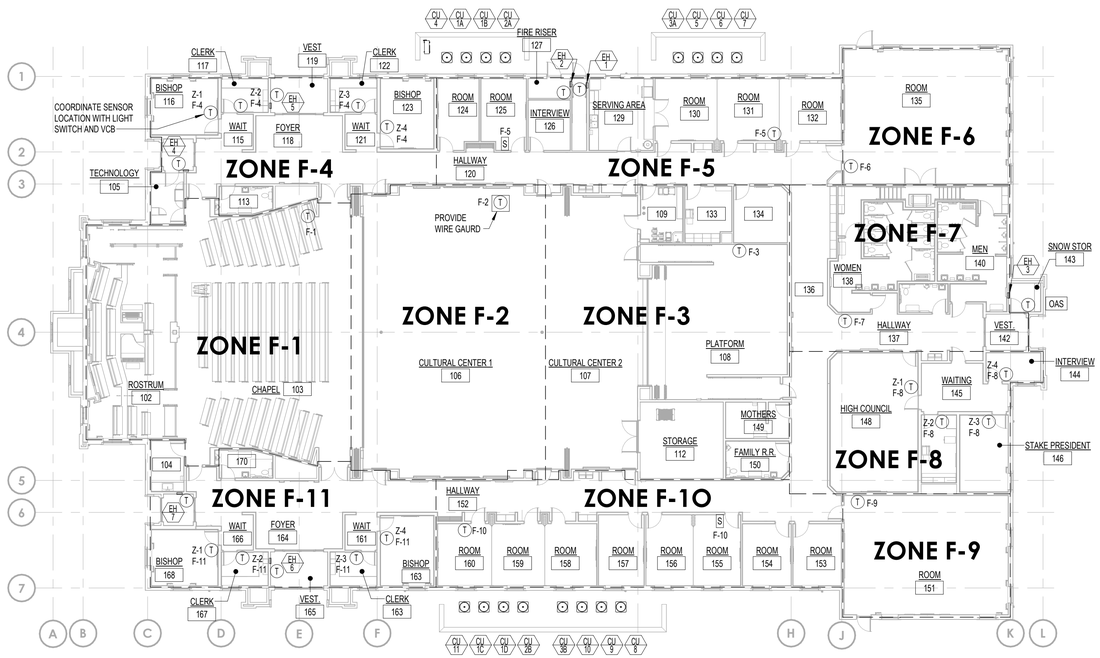

A ME101 MAIN FLOOR AUTOMATIC TEMPERATURE CONTROL PLAN

SCALE: 1/16" = 1'-0"

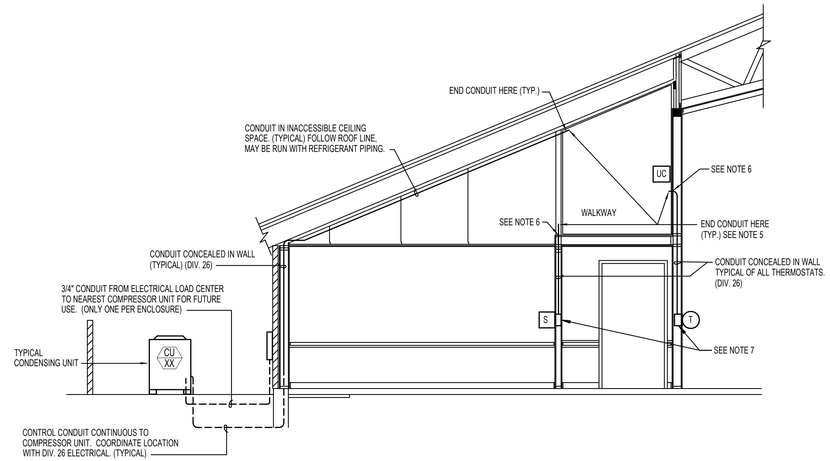

A MINIMUM REQUIRED CONDUIT-TYPICAL DETAIL

SCALE: NONE

NOTE:
ALL TEMPERATURE CONTROL CONDUIT SHALL BE FURNISHED AND INSTALLED BY DIVISION 26.

SYMBOLS

- UC — UNITARY CONTROLLER (DIV. 23). MOUNT MODULE IN ACCESSIBLE LOCATION ON OR NEAR ASSOCIATED FURNACE.
- RP-6 — RELAY PANEL (DIV. 23). MOUNT AT 5'-0" TO BOTTOM OF CABINET.
- T — THERMOSTAT (LCBS) OUTLET (CONDUIT BY DIV. 26)
- S — INDOOR AIR SENSOR OUTLET (CONDUIT BY DIV. 26)
- BMG — BUILDING MANAGEMENT GATEWAY (DIV. 23)
- OAS — GLOBAL OUTDOOR AIR SENSOR (DIV. 23) TO BE INSTALLED ON THE NORTH SIDE OF THE BUILDING (OUT OF DIRECT SUNLIGHT) AND CONNECTED TO ANY ZONE.
- C02 — CO2 SENSOR (DIV. 23). INSTALL UPSTREAM OF RELIEF OR OUTSIDE AIR CONNECTION.
- CRO — COMBINATION RELAY AND THERMAL OVERLOAD DISCONNECT (WITH 20 AMP RIB PANEL 240 1B)
- ZP-1 — 4 ZONE PANEL (DIV. 23)
- Z* — ZONE PANEL (* = ZONE NUMBER)
- SD — DUCT SMOKE DETECTOR

NOTES:
1. BOXES FOR THERMOSTAT (T) AND (S) OUTLETS SHALL BE 2"x4" WITH LONG DIMENSION VERTICAL. USE METAL BRACKET OF COVER PLATE ASSEMBLY TO MOUNT THERMOSTAT HORIZONTAL.
2. CONDUIT TO BE 1/2" UNLESS NOTED OTHERWISE.
3. TEMPERATURE CONTROL WIRING THAT IS NOT IN CONDUIT SHALL BE RUN PARALLEL AND PERPENDICULAR TO BUILDING CONSTRUCTION LINES. SEE SPECIFICATIONS FOR ACCEPTABLE FASTENING METHODS AND MAXIMUM ALLOWABLE SPACING BETWEEN FASTENERS.
4. TEMPERATURE CONTROL WIRING THAT IS NOT IN CONDUIT SHALL BE LABELED. PROVIDE A LABEL AT ALL POINTS WHERE TEMPERATURE CONTROL WIRING ENTERS CONDUIT AND AT CONNECTIONS TO DEVICES.
5. SEAL OPEN END OF CONDUIT AIR-TIGHT AROUND THERMOSTAT / SENSOR WIRE WITH SEALANT COMPOUND. SEE SPECIFICIATIONS FOR APPROVED PRODUCT.
6. SEAL ANNULAR SPACE BETWEEN CONDUIT AND OPENING IN FLOOR OR WALL PENETRATIONS WITH SEALANT COMPOUND. SEE SPECIFICATIONS FOR APPROVED PRODUCT.
7. SEAL OPEN END OF CONDUIT AT J-BOX AIR-TIGHT AROUND THERMOSTAT / SENSOR WIRE. SEAL ALL AIR GAPS AROUND J-BOX TO ISLOATE J-BOX FROM WALL CAVITY. SEAL BACK OF THERMOSTAT AROUND WIRES. PACK J-BOX WITH GLASS FIRE BAT INSULATION. USE SEALING COMPOUND SPECIFICALLY MADE FOR REFRIGERANT AND AIR-CONDITIONING APPLICATIONS. SEE SPECIFICATIONS FOR APPROVED PRODUCTS.
8. ELECTRIC HEATER ZONE. CONNECT UC UP TO 20 AMP RELAY AND THEN TO THERMAL OVERLOAD. REFER TO WIRING DIAGRAM ON SHEET ME706.

CONTROL EQUIPMENT

MARK	DESCRIPTION	CAT. NO. (1)	MARK	DESCRIPTION	CAT. NO. (1)
BMG	BUILDING MANAGEMENT GATEWAY	LGW1000 (GATEWAY) WPM-8000 (WALL PLUG)	RP-6	RELAY PANEL 24X18X6W/COVER	(2) (4)
UC	UNITARY CONTROLLER	YCRL64385R1000	DM-1	DAMPER MOTOR TWO POSITION	MS8105A1030
T	THERMOSTAT WALL MODULE	LCBS WALL MODULE	DM-2	DAMPER MOTOR 2 POS W/END SWITCH	MS8105A1130
	THERMOSTAT COVER PLATE ASSEMBLY	50002883-001	X-1	TRANSFORMER 120, 208, 240V/24V 75VA	AT175F1023
S	REMOTE SENSOR	TR40	X-2	TRANSFORMER 120V/24V 50VA	AT150F1022
G-1	THERMOSTAT GUARD	(2)	SD-1	DUCT SMOKE DETECTOR	(2)
DS	DUCT AIR SENSOR	C7041B2005	SR	SMOKE RELAY 30 AMP 120V COIL	DP2030B5003 (3)
CO_2	CO_2 SENSOR	C7232B1006	RIB	TWO POLE RELAY	RIBU1C (2)
ZP-1	ZONING PANEL (3 ZONES)	HZ322	RIB 20A	TWO POLE RELAY 20 AMP	RIB2401B (6)
ZP-2	ZONING PANEL (4 ZONES)	HZ432	OAS	GLOBAL OUTDOOR AIR SENSOR	C7041F2006 (7)
Z*	ZONE DAMPER (*=ZONE NUMBER)	ZD or ARD (5)	CRO	COMBINATION RELAY & THERMAL OVERLOAD DISCONNECT	(2) (4)
			E-BUS	ECHELON NETWORK CABLE	W221P-2001B

(1) ALL CATALOG NUMBERS SHOWN ARE HONEYWELL UNLESS NOTED OTHERWISE.
(2) SEE SPECIFICATIONS.
(3) PROVIDE ENCLOSURE.
(4) TO BE PURCHASED FROM AN APPROVED PRE-BUILT PANEL BUILDER SEE SPECIFICATION.
(5) SEE PLAN FOR REQUIRED SIZE AND ZONE NUMBER.
(6) USE WITH CRO DISCONNECT FOR ELECTRIC WALL HEATER. CONTROL FROM UC.
(7) ONLY ONE REQUIRED FOR BUILDING. MAY BE CONNECTED TO ANY CONTROLLER AT NORTH SIDE.

bhd ARCHITECTS
www.bhdarchitects.com
Phone 801.571.0010
Fax 801.571.0303
Toll Free 888.571.0010
65 East Wadsworth Park Drive
Suite 205 Draper, Utah 84020

REGISTERED PROFESSIONAL ENGINEER — DAVID L. HANSEN — May 28,2025 — STATE OF UTAH

Engineered Systems Associates
1355 EAST CENTER
POCATELLO, IDAHO 83201
PHONE: (208) 233-0501
FAX: (208) 233-0529
EMAIL:esa@engsystems.com
ESA JOB NUMBER: 25042

THE CHURCH OF JESUS CHRIST OF LATTER-DAY SAINTS

Nibley 6 & Nibley UT West Stake
Approx. 3410 South 1200 West, Nibley, Utah
41.671809, -111.860775

Owner #: 514-4728
Plan Series: Heritage 24
County Parcel: 03050-0016
BID #: 2403
Date: 29 Mar 2025

Drawing Issue and Revision Schedule

#	Date	Description
1	29 May 2025	Bid Documents

Automatic Temperature Control Floor Plans

ME101

5/29/2025 8:49:50 AM

LEGEND:

DIVISION 26 OR FACTORY PRE-WIRED

DIVISION 23 WIRING

NOTES
1. ECHELON BUS (E-BUS) MUST BE INSTALLED AT LEAST 12" AWAY FROM ALL ELECTRICAL DEVICES: I.E. MOTORS, LIGHT, ETC.
2. DO NOT USE THERMOSTAT CABLE AS NETWORK CABLE. USE SPECIFIED CABLE.

DS-DA
UI-3
WHITE
BLUE
WIRE NUT CONNECTORS (SPLICE IN BOX)
4 CONDUCTOR THERMOSTAT CABLE
DS-RA
UI-1
WHITE
BLUE
WIRE NUT CONNECTORS (SPLICE IN BOX)
4 CONDUCTOR THERMOSTAT CABLE

SW-2 SW-1 OUT AN
OFF ON OFF ON 0-100% 20-100% VOLTAGE CURRENT
JUMPER CONFIGURATION
* CO_2 SENSOR

(ONLY IF INDICATED ON SHEET ME101)
* CO_2 SENSOR
SET AT 800 PPM

* NOTE
REMOVE SETSCREW ON BOARD TO POSITION JUMPERS

GREEN — RED
YELLOW — BLACK
BROWN — ORANGE
BROWN — ORANGE
YELLOW — BLACK
GREEN — RED
8 CONDUCTOR THERMOSTAT CABLE

BROWN
YELLOW

2 2 2 2 2 2 2 2 2 3 3 3 3 3 3 3 3 3 4
1 2 3 4 5 6 7 8 9 0 1 2 3 4 5 6 7 8 9 0
AO-1 COM AO-2 AO-3 COM DI-1 DI-2 COM DI-3 DI-4 24 VDC UI-1 COM UI-2 UI-3 COM UI-4 UI-5 COM UI-6

Honeywell
SYSTEM #
UC

24 VAC
24 VAC COM
EGND
SHIELD
SBUS1
SBUS2
NET-1
NET-2
1 2 3 4 5 6 7 8

R RH RC AUX AUX/DO-1 W1 W2 W3/OB/GL G Y1 Y2 Y3/GL
1 1 1 1 1 1 1 1 1 1 1 2
9 0 1 2 3 4 5 6 7 8 9 0

FROM LON NETWORK
TO LON NETWORK
RED BLUE RED WHITE

RED BLUE WHITE ORANGE GREEN YELLOW

4 CONDUCTOR THERMOSTAT CABLE
8 CONDUCTOR THERMOSTAT CABLE SEE NOTES 1, 4 & 6

SEE WIRING SCHEMATIC, X-2
4X4 J-BOX SEE NOTE #7 & 8
X-2
BLUE
YELLOW
BLACK
GREEN
RED
L1
L2
BLUE
RED
WHITE/BLUE
YELLOW
WHITE/YELLOW
ORANGE
RIB

LOW VOLTAGE TERMINAL STRIP
RED R
BLUE C
WHITE W1
ORANGE W2
YELLOW Y
GREEN G
BLUE
GREEN
FAN UNIT

4 CONDUCTOR THERMOSTAT CABLE

SEE NOTE #2
GREEN
BLUE
C
CONDENSING UNIT
4 CONDUCTOR THERMOSTAT CABLE

TRANSFORMER X-2
BLUE BLUE BLACK BLUE
YELLOW GREEN RED YELLOW
ORANGE WHITE/YELLOW WHITE/BLUE RED
RED ORANGE YELLOW
RIB
RED 12 13 BLUE
LCBS UC
BLACK BLACK POWER RED RED
ORANGE ORANGE GREEN GREEN
CO_2 SENSOR
RED 1 2 BLUE
DAMPER MOTOR

WIRING SCHEMATIC, X-2

WIRING DIAGRAM
SYSTEMS: F-5, F-6, F-7, F-9 & F-10

4 CONDUCTOR THERMOSTAT CABLE
4 CONDUCTOR THERMOSTAT CABLE
SYSTEMS: F-6, F-7, & F-9 (T)

4 CONDUCTOR THERMOSTAT CABLE
SYSTEMS: F-5 & F-10 (S) (T)

GLOBAL OUTDOOR AIR SENSOR (DIV 23) TO BE INSTALLED ON THE NORTH SIDE OF THE BUILDING (OUT OF DIRECT SUNLIGHT) AND CONNECTED TO ANY ZONE.
OAS

NOTES
1. REFER TO NOTE 8 ON SHEET ME101.

L1
L2
2 POLE THERMAL DISCONNECT
TO ELECTRIC HEATER
ORANGE
YELLOW
RIB 20A
CRO
WHITE/BLUE
WHITE/YELLOW
X-2

AO-1 COM AO-2 AO-3 COM DI-1 DI-2 COM DI-3 DI-4 24 VDC UI-1 COM UI-2 UI-3 COM UI-4 UI-5 COM UI-6
Honeywell
UC
EH-1
24 VAC 24 VAC COM EGND SHIELD SBUS1 SBUS2 NET-1 NET-2
R RH RC AUX AUX/DO-1 W1 W2 W3/OB/GL G Y1 Y2 Y3/GL
FROM LON NETWORK
TO LON NETWORK
RED BLUE RED WHITE

SYSTEM: EH-1, EH-2 & EH-3 (T)

ELECTRIC HEATER WIRING DIAGRAM

bhd ARCHITECTS
www.bhdarchitects.com
Phone 801.571.0010
Fax 801.571.0303
Toll Free 888.571.0010
65 East Wadsworth Park Drive
Suite 205 Draper, Utah 84020

REGISTERED PROFESSIONAL ENGINEER — DAVID L. HANSEN — May 28,2025 — STATE OF UTAH

Engineered Systems Associates
1355 EAST CENTER
POCATELLO, IDAHO 83201
PHONE: (208) 233-0501
FAX: (208) 233-0529
EMAIL:esa@engsystems.com
ESA JOB NUMBER: 25042

THE CHURCH OF JESUS CHRIST OF LATTER-DAY SAINTS

Nibley 6 &
Nibley UT West Stake
Approx. 3410 South 1200 West, Nibley, Utah
41.670809, -111.866775

BHD #: 2403
County Parcel: 03:050:0016
Date: 29 Mar 2025
Plan Series: Heritage 24
Owner #: 514-4728

Drawing Issue and Revision Schedule

#	Date	Description
1	29 May 2025	Bid Documents

Automatic Temperature Control Wiring Diagram

ME701

5/29/2025 8:49:50 AM

LEGEND:

DIVISION 26 OR FACTORY PRE-WIRED

DIVISION 23 WIRING

NOTES:

FOR NOTES SEE SHEET ME701

3- #12 BLACK/WHITE/GREEN

PART OF 8 CONDUCTOR THERMOSTAT CABLE

8 CONDUCTOR THERMOSTAT CABLE

PART OF 8 CONDUCTOR THERMOSTAT CABLE

PART OF 12 CONDUCTOR THERMOSTAT CABLE

PART OF 8 CONDUCTOR THERMOSTAT CABLE

8 CONDUCTOR THERMOSTAT CABLE

PART OF 8 CONDUCTOR THERMOSTAT CABLE

8 CONDUCTOR THERMOSTAT CABLE

8 CONDUCTOR THERMOSTAT CABLE

DS-DA
UI-3
WHITE
BLUE
WIRE NUT CONNECTORS (SPLICE IN BOX)
4 CONDUCTOR THERMOSTAT CABLE

DS-RA
UI-1
WHITE
BLUE
WIRE NUT CONNECTORS (SPLICE IN BOX)
4 CONDUCTOR THERMOSTAT CABLE

Honeywell
SYSTEM #
UC

24 VAC
24 VAC COM
EGND
SHIELD
SB1/S1
SB2/S2
NET-1
NET-2

R
RH
RC
AUX
AUX/DO-1
W1
W2
W3/DB/GL
G
Y1
Y2
Y1/GL

TO LON NETWORK
FROM LON NETWORK

RED
BLUE
RED
WHITE

TAN
WHITE
ORANGE
GREEN
YELLOW
PINK

4 CONDUCTOR THERMOSTAT CABLE

12 CONDUCTOR THERMOSTAT CABLE SEE NOTES 1, 4 AND 6.

T
SYSTEM: F-1

X-1
FAN
R1
DAMPER
R2
HEAT 1
R3
HEAT 2
R4
COOL 1
R5
COOL 2
R6

TB1
SPACE
L1
N
GND
R1
G
X
SPACE
R3
W1
X
SPACE
R5
Y1
X
SPACE

FAN UNIT "a"
FAN UNIT "b"
FAN UNIT "c"
FAN UNIT "d"

TB2
SPACE
R
X
GND
R2
A2
X
SPACE
R4
W2
X
SPACE
R6
Y2
X
G+
GO
NO
COM
SPACE

RED
BLUE
BLACK
BROWN
BLACK
BROWN
TAN
WHITE
WHITE
GREY
YELLOW
YELLOW
PINK
RED
BLACK
ORANGE
GREEN

PANEL RP-6

SW-2
SW-1
OUT
AN
OFF
ON
OFF
ON
0-100%
20-100%
VOLTAGE
CURRENT
JUMPER CONFIGURATION

* CO_2 SENSOR

SET AT 800 PPM

* NOTE :
REMOVE SETSCREW ON BOARD TO POSITION JUMPERS

GREEN
YELLOW
BROWN
BROWN
YELLOW
GREEN
RED
BLACK
ORANGE
ORANGE
BLACK
RED

GREEN/BLUE
RED/GREEN
SEE NOTE #2
COMPRESSOR UNIT
4 CONDUCTOR THERMOSTAT CABLE
X-2
BLACK
WHITE
BLACK
BROWN
4X4 J BOX SEE NOTE #7
L1
L2
DM-2
1
2
S1
S2
S3
RED
BLUE
WHITE
GREEN
YELLOW
GREEN
R
C
W
Y
G
FAN UNIT "a"
WHITE
BLUE
ERV "A"
ENERGY RECOVERY VENTILATOR. SEE DETAIL ON SHEET ME703 FOR WIRING CONNECTIONS.
120V 1PHZ 60HZ
H
N
SWITCH BY DIV 26
BLACK
#12
WHITE
FAN UNIT DOOR SWITCH
AUX. J-BOX FURNISHED IN FAN UNIT
SMOKE DETECTOR
10 A
SD-1
120 VAC
120 VAC
AUX.
ALARM
12
13
15
16
NC
NO
SR
BLACK #12

GREEN/BLUE
4 CONDUCTOR THERMOSTAT CABLE
COMPRESSOR UNIT SEE NOTE #2
4X4 J BOX SEE NOTE #7
L1
L2
RED
BLUE
WHITE
GREEN
YELLOW
GREEN
R
C
W
Y
G
FAN UNIT "b"
120V 1PHZ 60HZ
H
N
SWITCH BY DIV 26
BLACK
WHITE
BLACK #12
FAN UNIT DOOR SWITCH
AUX. J-BOX FURNISHED IN FAN UNIT

GREEN/BLUE
RED/GREEN
SEE NOTE #2
COMPRESSOR UNIT
4 CONDUCTOR THERMOSTAT CABLE
X-2
BLACK
WHITE
BLACK
BROWN
4X4 J BOX SEE NOTE #7
L1
L2
DM-2
1
2
S1
S2
S3
RED
BLUE
WHITE
GREEN
YELLOW
GREEN
R
C
W
Y
G
FAN UNIT "c"
WHITE
BLUE
120V 1PHZ 60HZ
H
N
SWITCH BY DIV 26
BLACK
#12
WHITE
AUX. J-BOX FURNISHED IN FAN UNIT
FAN UNIT DOOR SWITCH
SMOKE DETECTOR
10 A
SD-1
120 VAC
120 VAC
AUX.
ALARM
12
13
15
16
NC
NO
SR
BLACK #12
ERV "B"
ENERGY RECOVERY VENTILATOR. SEE DETAIL ON SHEET ME703 FOR WITING CONNECTIONS.

GREEN/BLUE
4 CONDUCTOR THERMOSTAT CABLE
COMPRESSOR UNIT SEE NOTE #2
4X4 J BOX SEE NOTE #7
L1
L2
RED
BLUE
WHITE
GREEN
YELLOW
GREEN
R
C
W
Y
G
FAN UNIT "d"
120V 1PHZ 60HZ
H
N
SWITCH BY DIV 26
BLACK
WHITE
BLACK #12
FAN UNIT DOOR SWITCH
AUX. J-BOX FURNISHED IN FAN UNIT

WIRING DIAGRAM

SYSTEM: F-1

5/29/2025 8:49:50 AM

bhd ARCHITECTS
www.bhdarchitects.com
Phone 801.571.0010
Fax 801.571.0303
Toll Free 888.571.0010
65 East Wadsworth Park Drive
Suite 205 Draper, Utah 84020

LICENSED PROFESSIONAL ENGINEER
No. 7928
DAVID L. HANSEN
May 28,2025
STATE OF UTAH

ESA Engineered Systems Associates
1355 EAST CENTER
POCATELLO, IDAHO 83201
PHONE: (208) 233-0501
FAX: (208) 233-0529
EMAIL:esa@engsystems.com
ESA JOB NUMBER: 25042

THE CHURCH OF JESUS CHRIST OF LATTER-DAY SAINTS

Nibley 6 & Nibley UT West Stake

Approx. 3410 South 1200 West, Nibley, Utah
41.670809, -111.840775

Owner #: 514-4728
Plan Series: Heritage 24
County Parcel: 03050-0016
BHD #: 2403
Date: 29 Mar 2025

Drawing Issue and Revision Schedule

#	Date	Description
1	29 May 2025	Bid Documents

Automatic Temperature Control Wiring Diagram

ME702

LEGEND:

DIVISION 26 OR FACTORY PRE-WIRED

DIVISION 23 WIRING

NOTES:

FOR NOTES SEE SHEET ME701

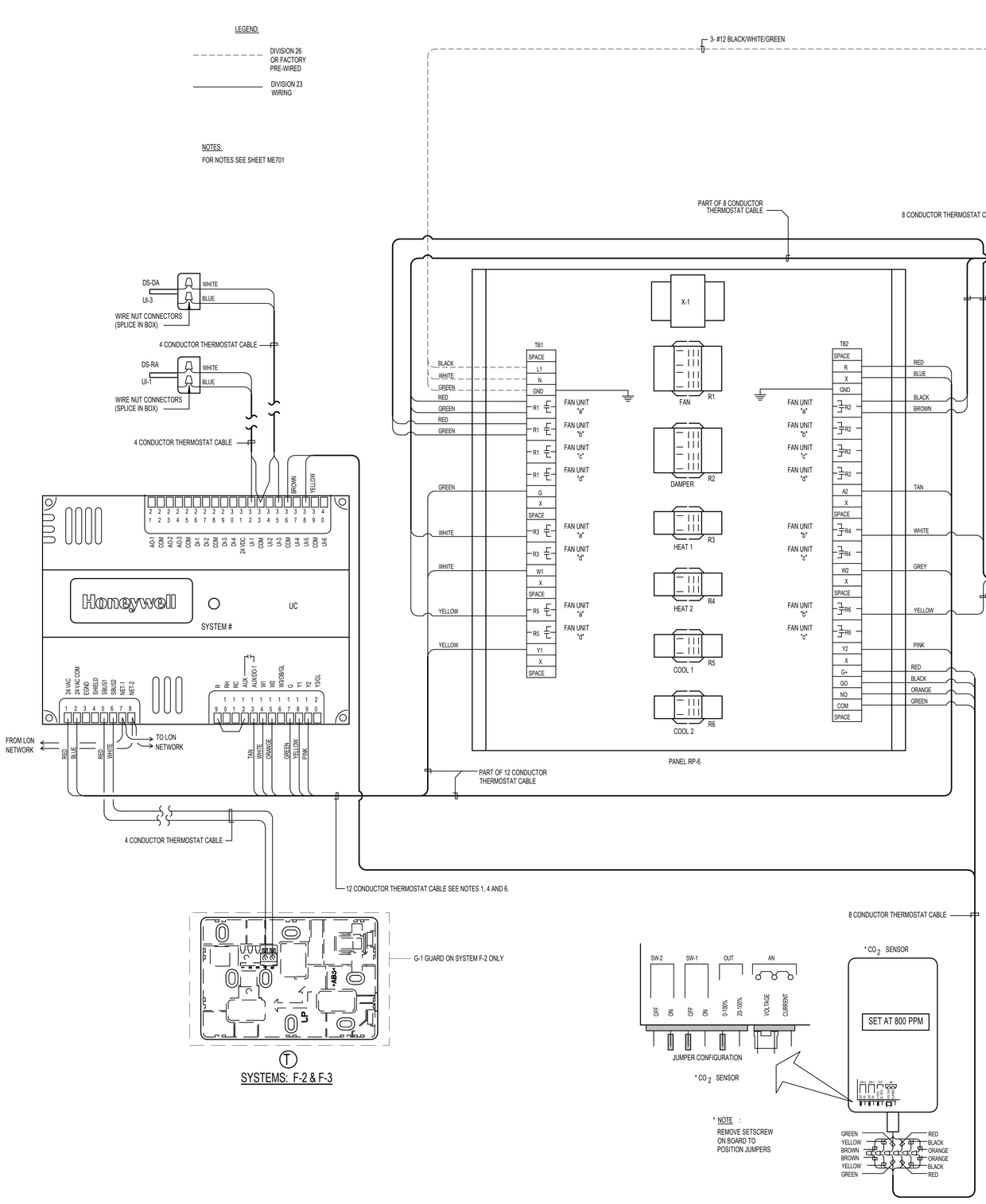

WIRING DIAGRAM

SYSTEMS: F-2, F-3

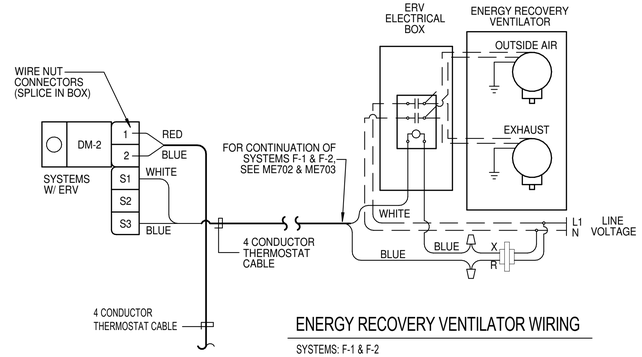

ENERGY RECOVERY VENTILATOR WIRING

SYSTEMS: F-1 & F-2

bhd ARCHITECTS
www.bhdarchitects.com
Phone 801.571.0010
Fax 801.571.0303
Toll Free 888.571.0010
65 East Wadsworth Park Drive
Suite 205 Draper, Utah 84020

REGISTERED PROFESSIONAL ENGINEER — DAVID L. HANSEN — May 28,2025 — STATE OF UTAH

Engineered Systems Associates
1355 EAST CENTER
POCATELLO, IDAHO 83201
PHONE: (208) 233-0501
FAX: (208) 233-0529
EMAIL:esa@engsystems.com
ESA JOB NUMBER: 25042

THE CHURCH OF JESUS CHRIST OF LATTER-DAY SAINTS

Nibley 6 & Nibley UT West Stake

Approx. 3410 South 1200 West, Nibley, Utah
41.670809 , -111.840775

BHD #: 2403
County Parcel: 03.050.0016
Plan Series: Heritage 24
Owner #: 514-4728
Date: 29 Mar 2025

Drawing Issue and Revision Schedule

#	Date	Description
1	29 May 2025	Bid Documents

Automatic Temperature Control Wiring Daigram

ME703

5/29/2025 8:49:50 AM

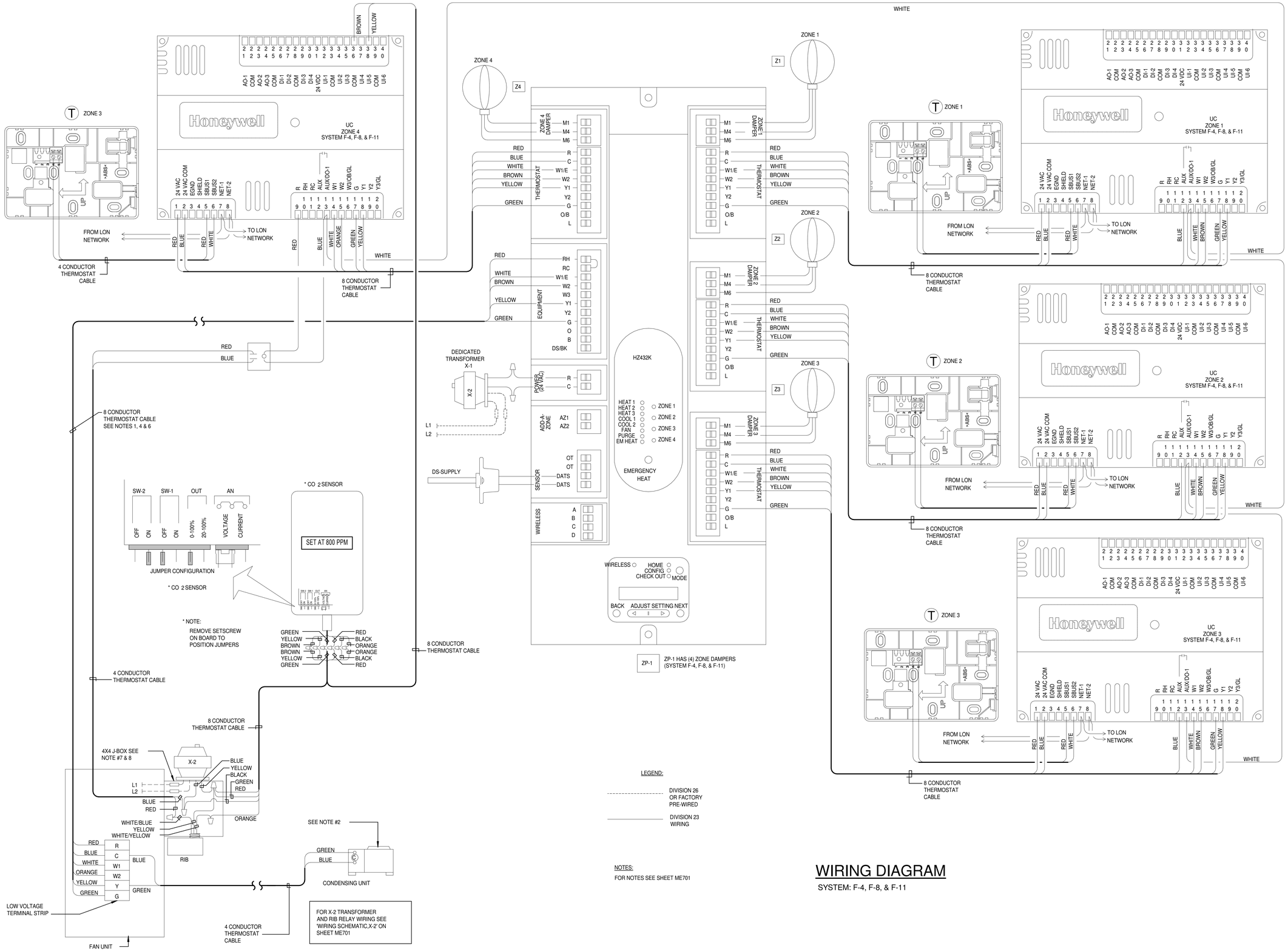

WIRING DIAGRAM

SYSTEM: F-4, F-8, & F-11

5/29/2025 8:49:51 AM

bhd ARCHITECTS
www.bhdarchitects.com
Phone 801.571.0010
Fax 801.571.0303
Toll Free 888.571.0010
65 East Wadsworth Park Drive
Suite 205 Draper, Utah 84020

REGISTERED PROFESSIONAL ENGINEER
No. 1166
DAVID L. HANSEN
May 28,2025
STATE OF UTAH

ESA Engineered Systems Associates
1355 EAST CENTER
POCATELLO, IDAHO 83201
PHONE: (208) 233-0501
FAX: (208) 233-0529
EMAIL:esa@engsystems.com
ESA JOB NUMBER: 25042

THE CHURCH OF JESUS CHRIST OF LATTER-DAY SAINTS

Nibley 6 & Nibley UT West Stake

Approx. 3410 South 1200 West, Nibley, Utah
41.670809, - 111.860775

Date:	BHD #:	County Parcel:	Plan Series:	Owner #:
29 Mar 2025	2403	o3050:0016	Heritage 24	514-4728

Drawing Issue and Revision Schedule

#	Date	Description
1	29 May 2025	Bid Documents

Automatic Temperature Control Wiring Diagram

ME704

A E-BUS CONNECTION DETAIL
NO SCALE

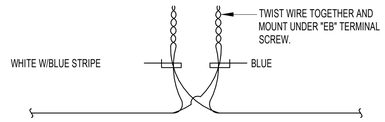

E-BUS WIRING DIAGRAM
NO SCALE

bhd ARCHITECTS
www.bhdarchitects.com
Phone 801.571.0010
Fax 801.571.0303
Toll Free 888.571.0010
65 East Wadsworth Park Drive
Suite 205 Draper, Utah 84020

REGISTERED PROFESSIONAL ENGINEER
No. 6 DAVID L. HANSEN
May 28,2025
STATE OF UTAH

ESA Engineered Systems Associates
1355 EAST CENTER
POCATELLO, IDAHO 83201
PHONE: (208) 233-0501
FAX: (208) 233-0529
EMAIL:esa@engsystems.com
ESA JOB NUMBER: 25042

THE CHURCH OF JESUS CHRIST OF LATTER-DAY SAINTS

Nibley 6 & Nibley UT West Stake
Approx. 3410 South 1200 West, Nibley, Utah
41.670809, -111.860775

Date: 29 Mar 2025
BHD #: 2403
County Parcel: 03:050:0016
Plan Series: Heritage 24
Owner #: 514-4728

Drawing Issue and Revision Schedule

#	Date	Description
1	29 May 2025	Bid Documents

Automatic Temperature Control Panel Schematic

ME705

5/29/2025 8:49:51 AM

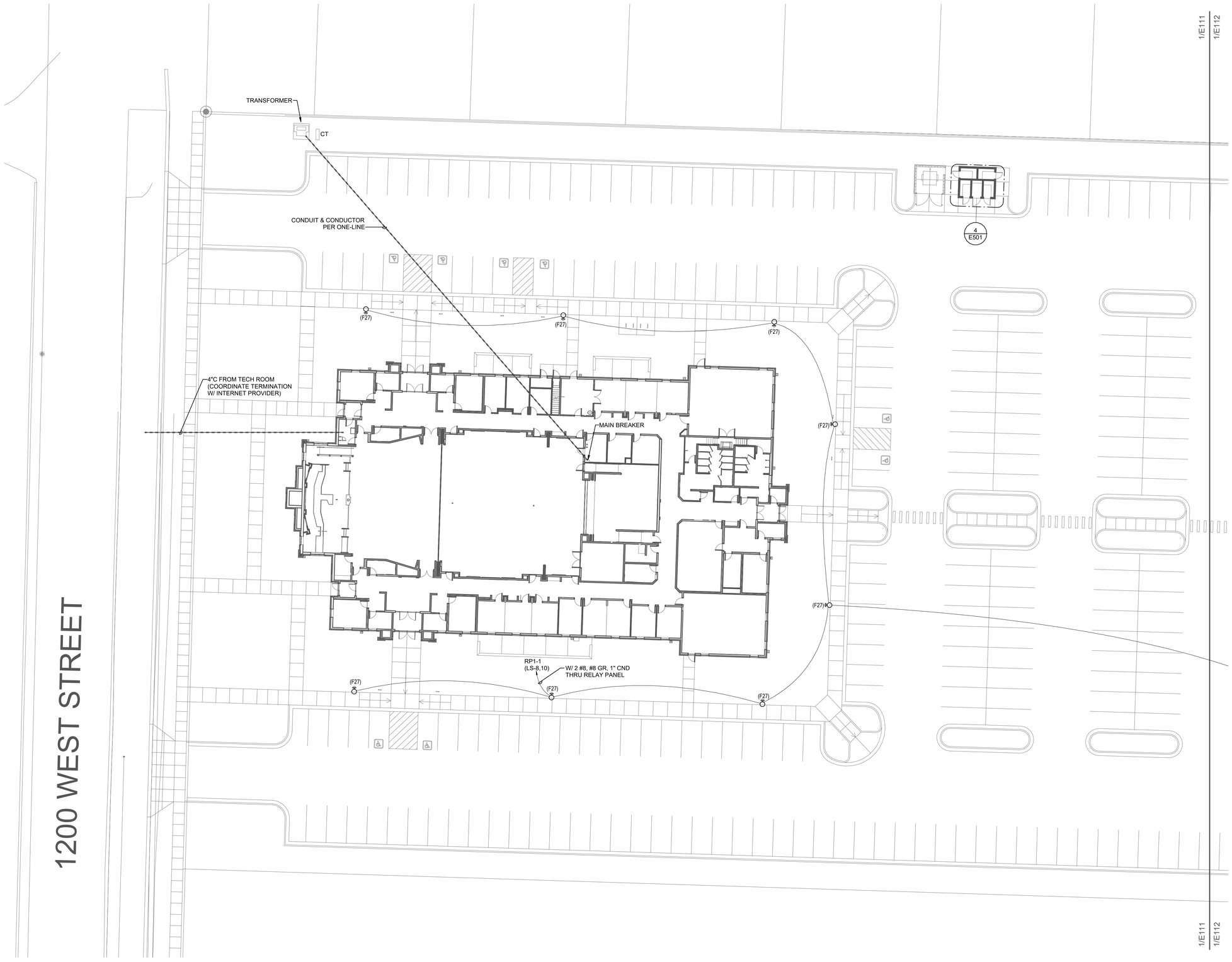

1 Electrical Site Plan - West Side
SCALE: 1" = 20'-0"

0 10' 20' 40'

W E S

bhd ARCHITECTS
www.bhdarchitects.com
Phone 801.571.0010
Fax 801.571.0303
Toll Free 888.571.0010
65 East Wadsworth Park Drive
Suite 205 Draper, Utah 84020

LICENSED PROFESSIONAL ENGINEER
No. 5148728
DAVID G. HINCKLEY
5/29/25
STATE OF UTAH

SPECTRUM ENGINEERS
324 S. State St., Suite 400
Salt Lake City, UT 84111
800-678-7077
801-328-5151
fax: 801-328-5155
www.spectrum-engineers.com

THE CHURCH OF
JESUS CHRIST
OF LATTER-DAY SAINTS

Nibley 6 &
Nibley UT West Stake

Approx. 3410 South 1200 West, Nibley, Utah
41.670809, -111.860775

Date:	BHD #:	County Parcel:	Plan Series:	Owner #:
29 May 2025	2403	03:050:0016	Heritage 24	514-4728

Drawing Issue and Revision Schedule

#	Date	Description
1	29 May 2025	Bid Documents

Electrical Site Plan - West Side

ES111

Autodesk Docs://250274 - Nibley 6 Meetinghouse/250274-Elec Central.rvt
5/29/2025 9:59:09 AM

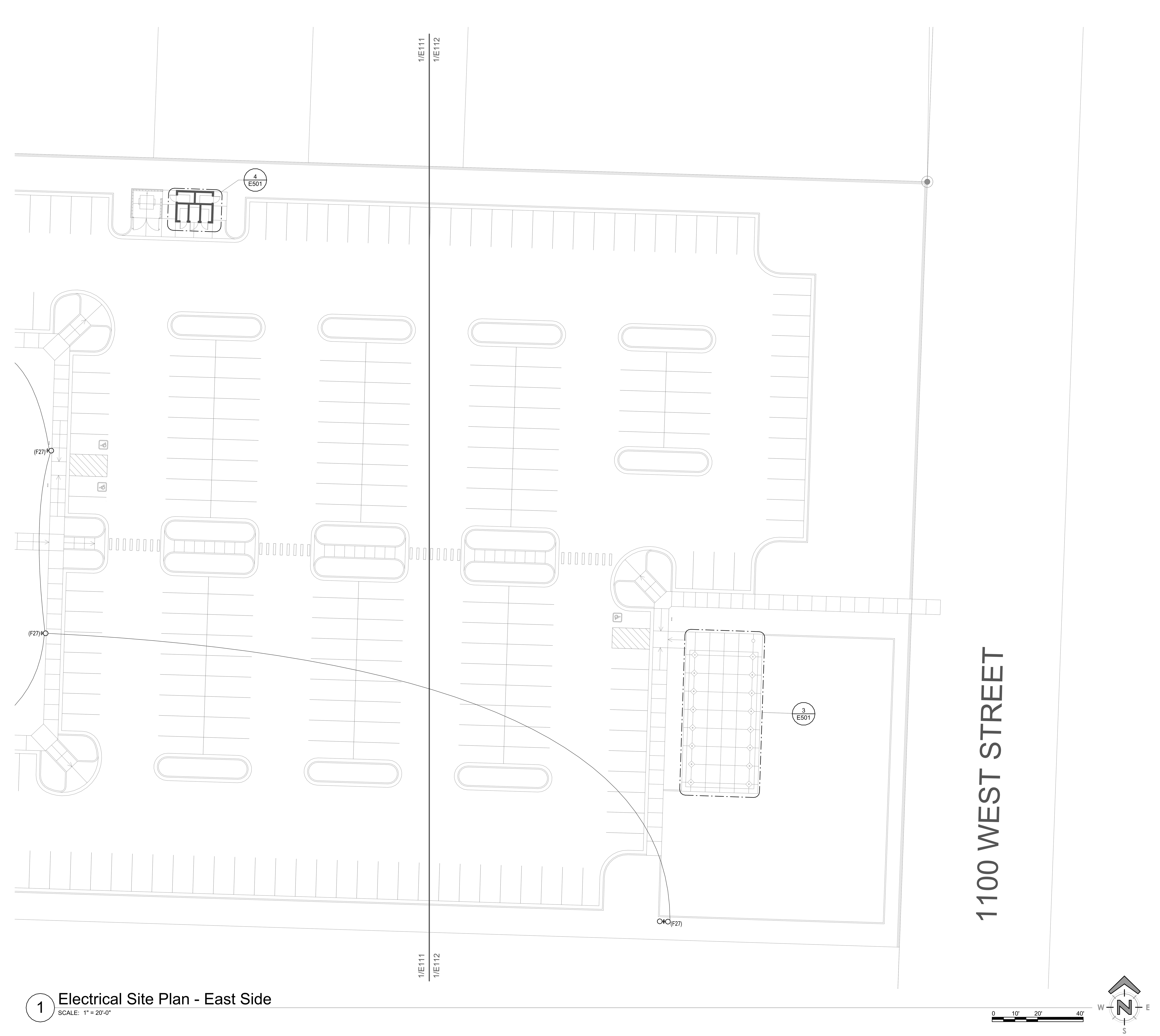

1 Electrical Site Plan - East Side

SCALE: 1" = 20'-0"

bhd ARCHITECTS
www.bhdarchitects.com
Phone 801.571.0010
Fax 801.571.0303
Toll Free 888.571.0010
65 East Wadsworth Park Drive
Suite 205 Draper, Utah 84020

LICENSED PROFESSIONAL ENGINEER
No. 5148728
DAVID G. HINCKLEY
5/29/25
STATE OF UTAH

SPECTRUM ENGINEERS
324 S. State St., Suite 400
Salt Lake City, UT 84111
800-678-7077
801-328-5151
fax: 801-328-5155
www.spectrum-engineers.com

THE CHURCH OF JESUS CHRIST OF LATTER-DAY SAINTS

Nibley 6 & Nibley UT West Stake

Approx. 3410 South 1200 West, Nibley, Utah
41.670809, -111.860775

Date:	BHD #:	County Parcel:	Plan Series:	Owner #:
29 May 2025	2403	03:050:0016	Heritage 24	514-4728

Drawing Issue and Revision Schedule

#	Date	Description
1	29 May 2025	Bid Documents

Electrical Site Plan - East Side

ES112

GENERAL SHEET NOTES

1 SEE MECHANICAL AND TECHNOLOGY SHEETS FOR REQUIRED RACEWAY AND BOXES FOR TEMPERATURE CONTROL, TELEPHONE, DATA, SOUND, VIDEO, SATELLITE, AND TV SYSTEMS.

SHEET KEYNOTES

1. CIRCUIT EXHAUST FAN TO THE SAME CIRCUIT AS LIGHTS IN ROOM. CONTROL WITH LIGHTING CONTROL.
2. PROVIDE AIRTIGHT JUNCTION BOX FOR LOCATIONS IN EXTERIOR WALL. SEAL AROUND ALL PENETRATIONS TO KEEP THE BOX AIR TIGHT. REFER TO SPECS.
3. LOCATE OUTLET SO RANGE WILL SIT TIGHTLY AGAINST WALL.
4. USE INTERMATIC E1020 OR TORK 701A TIMER SWITCH.
5. FOR FONT AREA, PROVIDE RELAYS AND INTERLOCK SUCH THAT IF THE OCCUPANCY SENSORS ARE ACTIVATED IN EITHER RESTROOM OR THE FONT, THE EXHAUST FAN WILL TURN ON.
6. COORDINATE WITH DETAIL ON SOUND AND ARCHITECTS DRAWINGS FOR MOUNTING LOCATION OF RECEPTACLES IN PULPIT.
7. CIRCUIT EXHAUST FAN WITH LIGHTS IN THIS ROOM AND CONTROL EXHAUST FAN WITH TIMER SWITCH. 0-60 MINUTE (INTERMATIC FD60MWC, PARAGON SWPD60M-W, TORK A560MW).

SHEET KEYNOTES

8. LOCATE BOX SO DUPLEX RECEPTACLE CAN BE MOUNTED HORIZONTALLY IN HARDWOOD BASE.
9. STUB CONDUIT INTO DOOR HEAD FRAME FOR INSTALLATION OF ACCESS CONTROL SYSTEM WIRING. RUN CONDUIT TO ACCESSIBLE LOCATION IN UPPER MECHANICAL SPACE AND TERMINATE IN BOX LABELED 'ACCESS CONTROL'
10. SPLIT WIRE SO UPPER HALF OF RECEPTACLE IS CONTROLLED BY LIGHT SWITCH AND LOWER HALF IS UNSWITCHED ON SAME CIRCUIT.
11. PROVIDE A 4" SQUARE 2-1/8" DEEP BOX FOR AUTOMATIC DOOR ACTIVATING SWITCH FURNISHED BY OTHERS. LEAVE EXTRA CONDUCTOR LENGTH FOR CONNECTION.
12. AUTOMATIC DOOR OPERATOR FURNISHED BY OTHERS. COORDINATE CONDUIT AND CONDUCTOR LENGTHS AND ROUTING FOR COMPLETE, CONCEALED INSTALLATION.
13. COORDINATE WITH ARCHITECTS DRAWINGS MOUNT RECEPTACLE ON THE VERTICAL WALL OF THE RECESSED ORGAN BOX.
14. (2) 1.25" CONDUITS FROM J- BOX TO UPPER SHELF IN ORGAN SPEAKER CHAMBER.

SHEET KEYNOTES

15. PROVIDE #4 CU GROUND TO BUILDING ELECTRICAL GROUND. PROVIDE GROUND BUS IN TELECOM ROOM.
16. COORDINATE LOCATION OF DEVICES WITH DIVISION 27 PRIOR TO ROUGH-IN.
17. REFER TO A411 FOR MOUNTING OF DUPLEX RECEPTACLE AND DATA OUTLET ON SIDE OF PULPIT.
18. PROVIDE 0.5" CONDUIT FROM RECEPTACLE IN RESTROOM TO JUNCTION BOX FOR FUTURE EMERGENCY SWITCH LOCATION AND FROM FUTURE EMERGENCY SWITCH LOCATION TO JUNCTION BOX FOR POWER TO CHANGING STATION. SEE MANUFACTURER'S SHOP DRAWINGS FOR CONFIRMATION OF CONDUIT ROUTING. PROVIDE COVER PLATES FOR SWITCH AND JUNCTION BOX.
19. CIRCUIT EXHAUST FAN W/ LIGHTS IN ROOM AND CONTROL W/ MANUAL TIMER SWITCH.
20. RUN LIGHTING AND FAN THROUGH GFCI LOAD ON RECEPTACLE.
21. BOND ALL METAL PARTS OF FONT SHELL GROUNDING INCLUDING BUT NOT NECESSARILY LIMITED TO METAL HANDRAIL PER THE NEC ARTICLE 680.
22. LINE VOLTAGE THERMOSTAT PROVIDED BY DIVISION 23 AND INSTALLED BY DIVISION 26.

SHEET KEYNOTES

23. SEE ET101/A110 FOR FLOOR BOX LOCATION AND ET601 FOR TYPE.
24. NOT USED.
25. CIRCUIT EXHAUST FAN TO LINE VOLTAGE THERMOSTAT.
26. DISCONNECT FOR WALL HEATER IS PROVIDED BY THE MECHANICAL CONTRACTOR WITH CONNECTIONS BY THE ELECTRICAL CONTRACTOR.
27. MOUNT RECEPTACLE IN AUDIOVISUAL BACK BOX.
28. PROVIDE WALL MOUNTED RECEPTACLE FOR TV LOCATION. COORDINATE EXACT LOCATION WITH AUDIOVISUAL PLANS.
29. RUN 1" CONDUIT BACK TO RECIRCULATION PUMP IN MEZZANINE.
30. NOT USED.
31. SEE SHEET E501 FOR PAVILION AND STORAGE BUILDING ELECTRICAL PLANS.

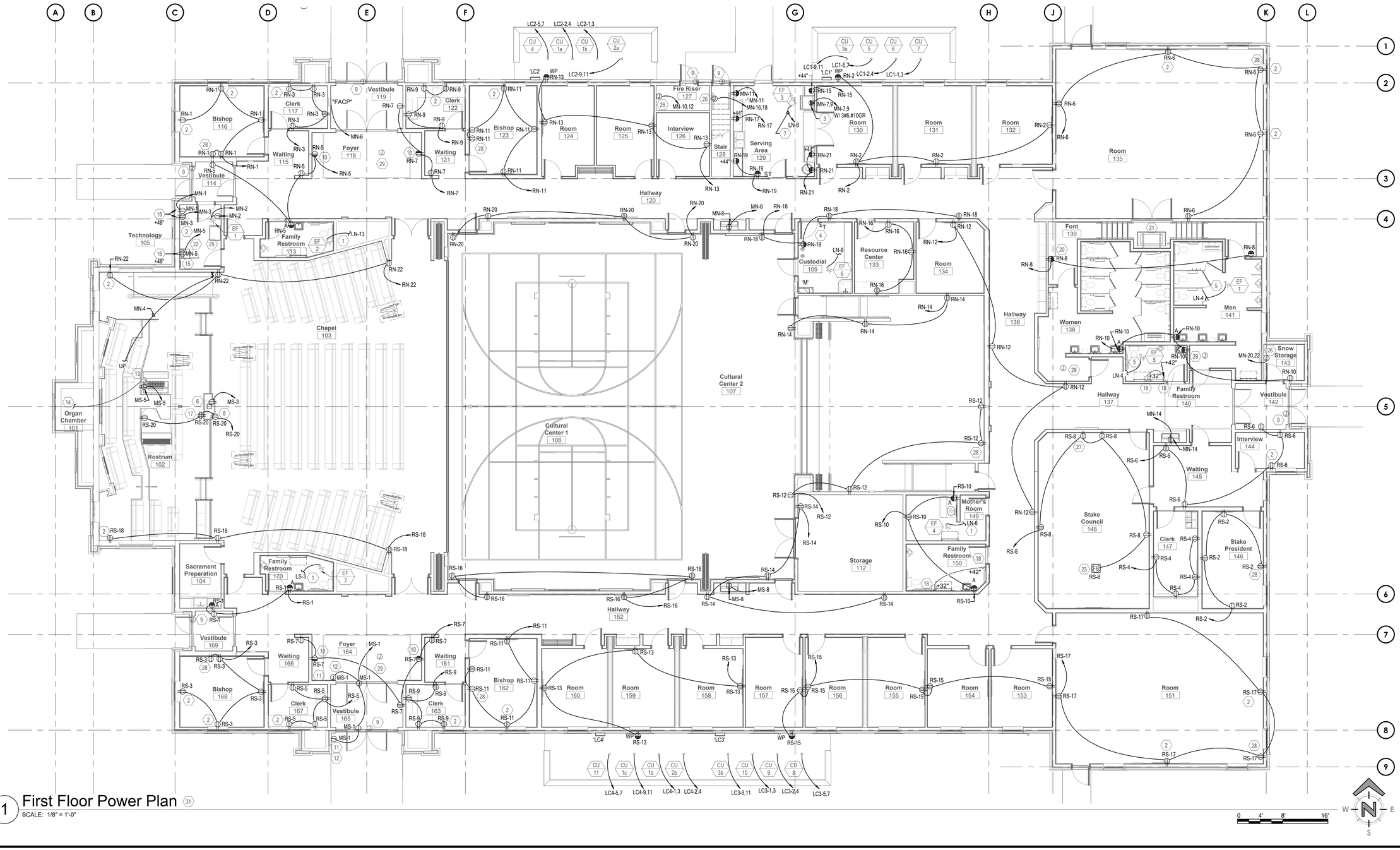

1 First Floor Power Plan (31)
SCALE: 1/8" = 1'-0"

bhd ARCHITECTS
www.bhdarchitects.com
Phone 801.571.0010
Fax 801.571.0303
Toll Free 888.571.0010
65 East Wadsworth Park Drive
Suite 205 Draper, Utah 84020

LICENSED PROFESSIONAL ENGINEER
No. 5148728
DAVID G. HINCKLEY
5/29/25
STATE OF UTAH

SPECTRUM ENGINEERS
324 S. State St., Suite 400
Salt Lake City, UT 84111
800-678-7077
801-328-5151
fax: 801-328-5155
www.spectrum-engineers.com

THE CHURCH OF JESUS CHRIST OF LATTER-DAY SAINTS

Nibley 6 & Nibley UT West Stake
Approx. 3410 South 1200 West, Nibley, Utah
41.670697, -111.868775

Owner #: 514-4728
Plan Series: Heritage 24
County Parcel: 03.050.0016
BHD #: 2403
Date: 29 May 2025

Drawing Issue and Revision Schedule

#	Date	Description
1	29 May 2025	Bid Documents

First Floor Power Plan

E101

Autodesk Docs://250274 - Nibley 6 Meetinghouse/250274-Elec Central.rvt
5/29/2025 9:59:13 AM

GENERAL SHEET NOTES

1. VERIFY MECHANICAL EQUIPMENT AND LOCATIONS WITH MECHANCIAL DRAWINGS.
2. REFER TO EQUIPMENT SCHEDULE ON SHEET E602 FOR MECHANICAL EQUIPMENT FEEDER INFORMATION.

SHEET KEYNOTES

1. ELECTRICAL PANELS TO BE SURFACE MOUNTED.
2. PROVIDE POWER AND CONTROL CABLING TO PROJECTION SCREEN.
3. DOOR ACCESS CONTROL PANEL TO BE LOCATED HERE. PROVIDE OUTLET FOR PANEL.

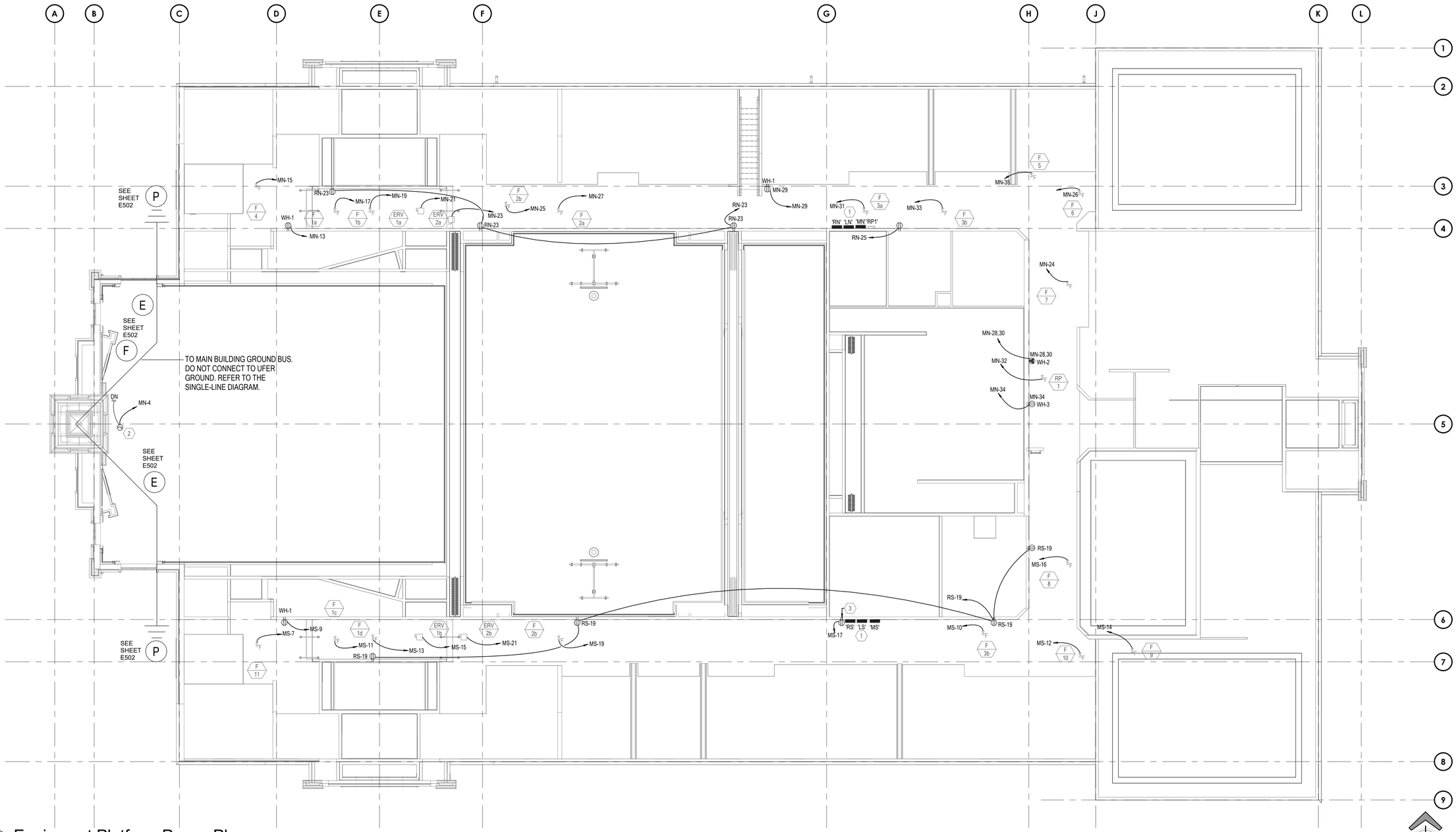

1 Equipment Platform Power Plan
SCALE: 1/8" = 1'-0"

bhd ARCHITECTS
www.bhdarchitects.com
Phone 801.571.0010
Fax 801.571.0303
Toll Free 888.571.0010
65 East Wadsworth Park Drive
Suite 205 Draper, Utah 84020

LICENSED PROFESSIONAL ENGINEER
No. 5148728
DAVID G. HINCKLEY
5/29/25
STATE OF UTAH

SPECTRUM ENGINEERS
324 S. State St., Suite 400
Salt Lake City, UT 84111
800-678-7077
801-328-5151
fax: 801-328-5155
www.spectrum-engineers.com

THE CHURCH OF JESUS CHRIST OF LATTER-DAY SAINTS

Nibley 6 & Nibley UT West Stake

Approx. 3410 South 1200 West, Nibley, Utah
41.670809, -111.860775

Date:	BHD #:	County Parcel:	Plan Series:	Owner #:
29 May 2025	2403	03:050:0016	Heritage 24	514-4728

Drawing Issue and Revision Schedule

#	Date	Description
1	29 May 2025	Bid Documents

Equipment Platform Power Plan

E102

Autodesk Docs://250274 - Nibley 6 Meetinghouse/250274-Elec Central.rvt
5/29/2025 9:59:15 AM

GENERAL SHEET NOTES

1. EXACT LOCATION OF LIGHT FIXTURES SHALL BE AS SHOWN ON LIGHTING PLAN SHEET E111.
2. CEILING MOUNTED OCCUPANCY SENSORS SHALL NOT BE INSTALLED WITHIN 6 FEET OF ANY MECHANICAL DIFFUSER.
3. LOWER CASE LETTERS ON OR NEAR FIXTURES INDICATE CONTROLLING SWITCHES. SWITCH LEGS NOT ALWAYS SHOWN.
4. SEE ME SHEETS FOR ELECTRICAL WORK FOR CONTROLS.
5. PROVIDE UNSWITCHED HOT CONDUCTOR TO ALL BATTERY FIXTURES AND EXIT SIGNS.

SHEET KEYNOTES

1. PROVIDE SUFFICIENT BOX DEPTH FOR POWER PACKS AND CORRECT PLASTER RING TO ACCOMMODATE ACTUAL RELAY UNIT AND OCCUPANCY SENSOR INSTALLED. ALSO PROVIDE PROPER SEPARATION OF 120V AND CLASS 2 WIRING AS NECESSARY IN ACCORDANCE WITH NEC. SET SENSITIVITY AND TIME DELAY OF SENSOR AT MAXIMUM. TYPICAL OF ALL POWER PACKS.
2. FIXTURE TO BE ON CONTINUOUSLY (NOT SWITCHED).
3. PROVIDE ON/OFF SWITCH WITH DIMMING. SEE DETAIL 1/E605 FOR SWITCH LABELING.
4. PROVIDE 0-10V SLIDE DIMMING ADJACENT TO LIGHT SWITCH.
5. CIRCUIT THROUGH THE LIGHTING CONTROL PANEL ON MEZZANINE, ADJACENT TO PANEL C1. SEE EXTERIOR LIGHTING CONTROL ON DIAGRAM SHEET E606.
6. RUN LIGHTING THROUGH MINI INVERTER LOCATED IN MEZZANINE ADJACENT TO PANEL C1 (EXCEPT FOR F26 LIGHTING, WHICH COMES WITH ITS OWN EM BATTERY BACKUP. THESE LIGHTS WILL RECEIVE SWITCHED POWER FROM THE RELAY PANEL AND CONSTANT POWER TO THE BATTERY BACKUP).
7. PROVIDE ON/OFF SWITCH FOR LIGHTING AREA. MANUAL ON/AUTO OFF WITH OCCUPANCY SENSORS. SEE DIAGRAM 2 ON SHEET E606.

SHEET KEYNOTES

8. PROVIDE 0-10V DIMMING THROUGH ROOM CONTROLLER.
9. PROVIDE DIMMER SWITCH (CONNECT TO OUTPUT OF 2 VERTICAL COVE LIGHTS, THEN TO FIXTURE TO ALLOW IT TO DIM INDEPENDENTLY OF THE OTHER FIXTURES BUT BE SHUT OFF WHEN THE COVE LIGHTS ARE SHUT OFF).
10. PROVIDE WIRE GUARD.
11. MOUNT LIGHTS ON UNDERSIDE OF UPPER SHELF IN ORGAN SPEAKER CHAMBER.
12. TO LOAD SIDE OF GFCI OUTLET.
13. PROVIDE ROOM CONTROLLER TO PROVIDE 0-10V DIMMING.
14. SEE A/A533 FOR MOUNTING OF COVE LIGHT FIXTURES.
15. SEE 2/A401 FOR MOUNTING OF COVE LIGHT FIXTURES.
16. SEE E/A533 FOR MOUNTING OF COVE LIGHT FIXTURES.
17. SEE 3/A401 FOR MOUNTING OF COVE LIGHT FIXTURES.

SHEET KEYNOTES

18. DAYLIGHT ZONE. PROVIDE 0-10V DIMMING FOR DAYLIGHTING ZONE WITH ROOM CONTROLLER LOCATED ADJACENT TO PANEL 'RP1'.
19. 7-BUTTON 2 SWITCHES.
20. WALL MOUNTED OCCUPANCY SENSOR CONNECTED TO ROOM CONTROLLER. MOUNT AT +108".
21. ROUTE THROUGH ROOM CONTROLLER LOCATED IN TECHNOLOGY ROOM. SEE DIAGRAM 2 ON SHEET E605.
22. WIRE OCCUPANCY SENSOR TO POWER PACK.
23. MOUNT STRIP LIGHT ON CEILING SLOPE. AVOID ROUND DUCTS. COORDINATE MOUNTING LOCATION WITH ARCHITECT.
24. SEE SHEET E501 FOR PAVILION AND STORAGE BUILDING ELECTRICAL PLANS.
25. MOUNT WALL SCONCE AT 7'-6" AFF TO TOP OF FIXTURE.

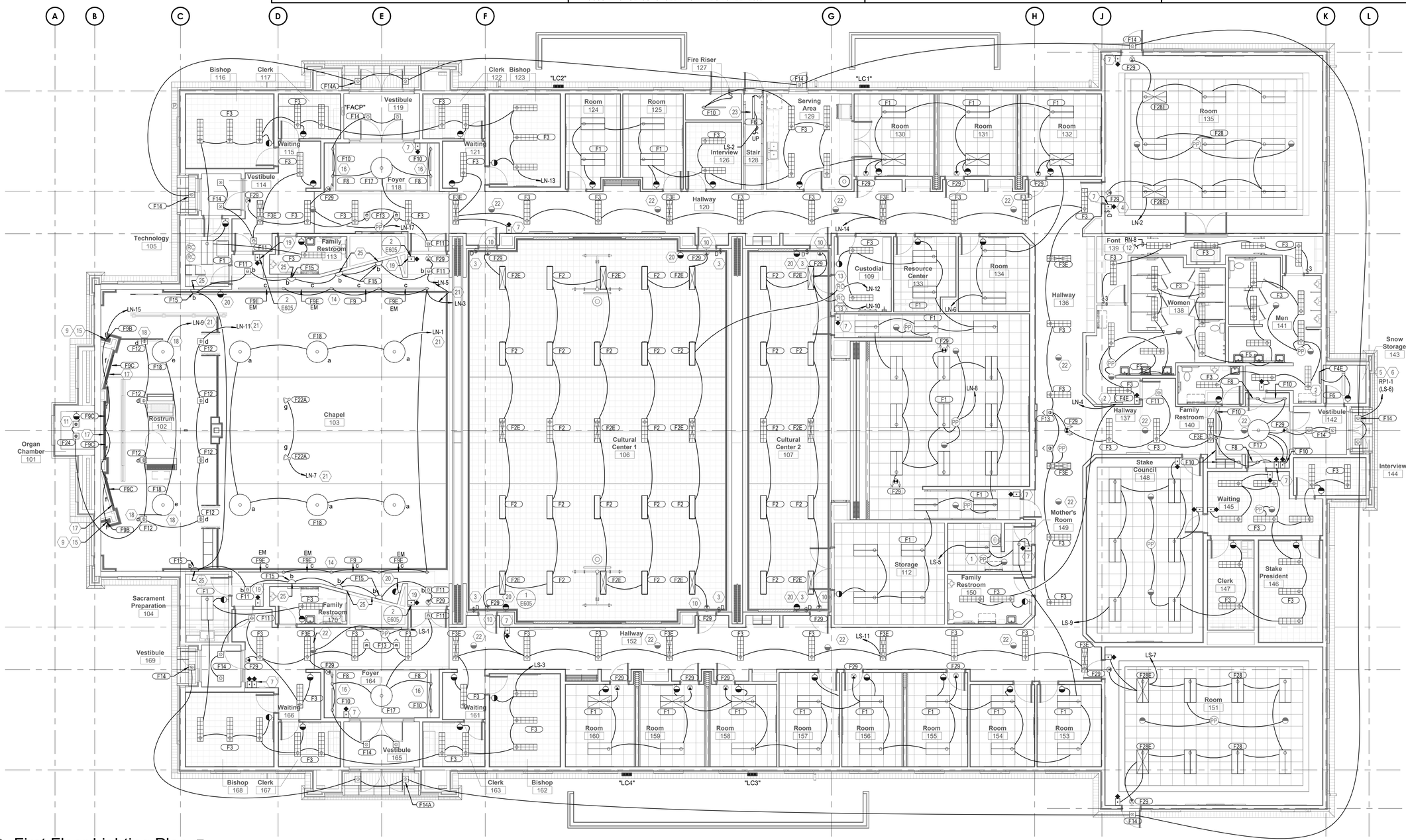

1 First Floor Lighting Plan 24
SCALE: 1/8" = 1'-0"

bhd ARCHITECTS
www.bhdarchitects.com
Phone 801.571.0010
Fax 801.571.0303
Toll Free 888.571.0010
65 East Wadsworth Park Drive
Suite 205 Draper, Utah 84020

LICENSED PROFESSIONAL ENGINEER
No. 5148728
DAVID G. HINCKLEY
5/29/25
STATE OF UTAH

SPECTRUM ENGINEERS
324 S. State St., Suite 400
Salt Lake City, UT 84111
800-678-7077
801-328-5151
fax: 801-328-5155
www.spectrum-engineers.com

THE CHURCH OF JESUS CHRIST OF LATTER-DAY SAINTS

Nibley 6 & Nibley UT West Stake

Approx. 3410 South 1200 West, Nibley, Utah
41.670869, -111.866775

BHD #: 2403
County Parcel: 03.050.0016
Plan Series: Heritage 24
Owner #: 514-4728
Date: 29 May 2025

Drawing Issue and Revision Schedule		
#	Date	Description
1	29 May 2025	Bid Documents

First Floor Lighting Plan

E151

Autodesk Docs://250274 - Nibley 6 Meetinghouse/250274-Elec Central.rvt
5/29/2025 9:59:18 AM

GENERAL SHEET NOTES

1 COORDINATE LIGHT FIXTURE LOCATIONS IN MECHANICAL EQUIPMENT AREAS. CHAIN SUSPEND FIXTURES AS NECESSARY FOR UNOBSTRUCTED ILLUMINATION.

SHEET KEYNOTES

1 PROVIDE 250W LED INVERTER (BODINE ELI-S-250) FOR EXTERIOR EGRESS LIGHTING.

2 PROVIDE LOW VOLTAGE OVERRIDE SWITCH WITH WIRING TO ADJACENT RELAY PANEL. 1 BUTTON SWITCH TO BE LABELED "FLAGPOLE LIGHTING". PROGRAM BUTTON TO PROVIDE MANUAL OVERRIDE OF RELAY SERVING FLAGPOLE LIGHTING ON/OFF.

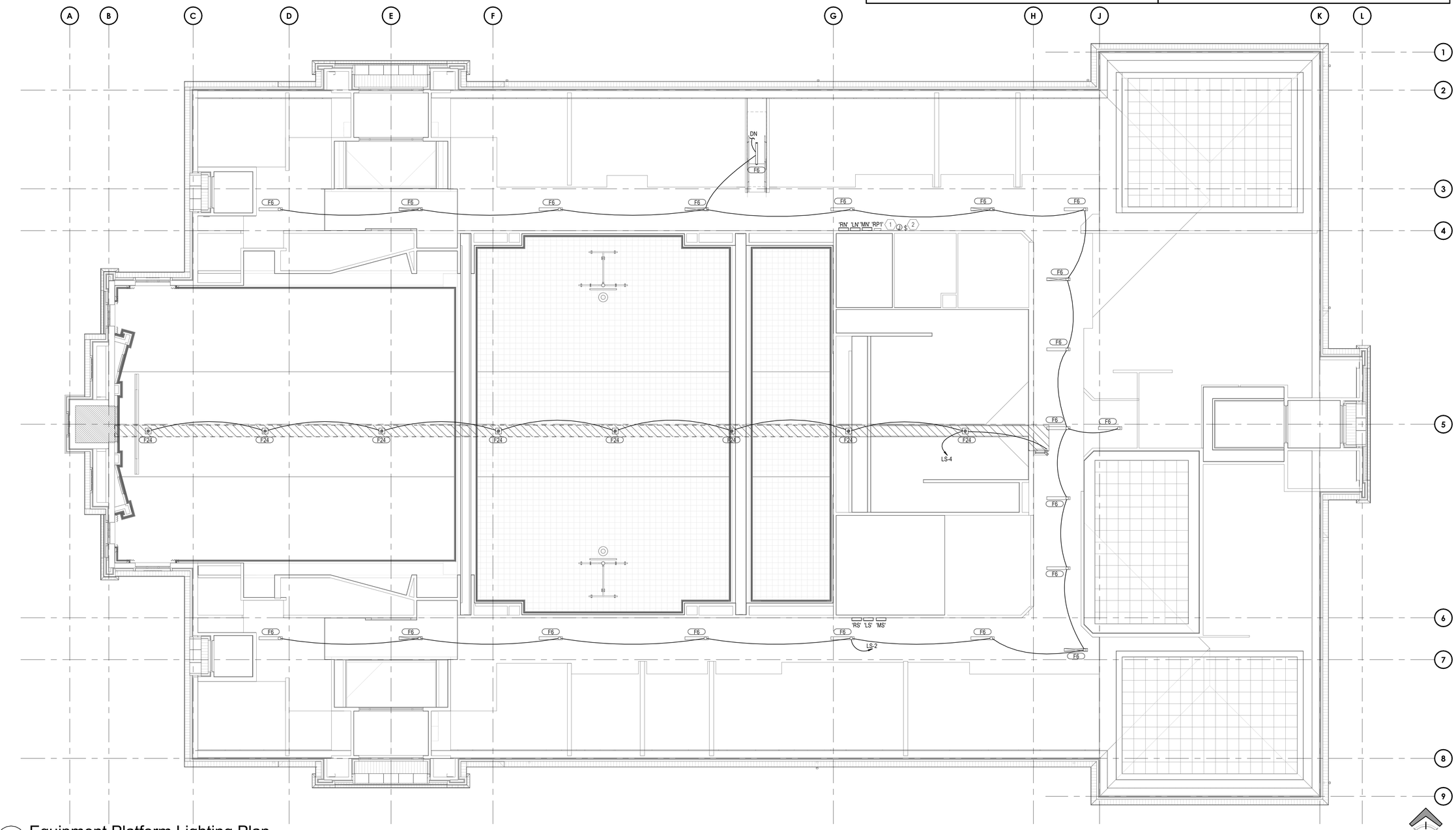

1 Equipment Platform Lighting Plan
SCALE: 1/8" = 1'-0"

bhd ARCHITECTS
www.bhdarchitects.com
Phone 801.571.0010
Fax 801.571.0303
Toll Free 888.571.0010
65 East Wadsworth Park Drive
Suite 205 Draper, Utah 84020

LICENSED PROFESSIONAL ENGINEER
No. 5148728
DAVID G. HINCKLEY
5/29/25
STATE OF UTAH

SPECTRUM ENGINEERS
324 S. State St., Suite 400
Salt Lake City, UT 84111
800-678-7077
801-328-5151
fax: 801-328-5155
www.spectrum-engineers.com

THE CHURCH OF
JESUS CHRIST
OF LATTER-DAY SAINTS

Nibley 6 &
Nibley UT West Stake

Approx. 3410 South 1200 West, Nibley, Utah
41.670809, -111.860775

Date:	BHD #:	County Parcel:	Plan Series:	Owner #:
29 May 2025	2403	03:050:0016	Heritage 24	514-4728

Drawing Issue and Revision Schedule

#	Date	Description
1	29 May 2025	Bid Documents

Equipment Platform Lighting Plan

E152

Autodesk Docs://250274 - Nibley 6 Meetinghouse/250274-Elec Central.rvt
5/29/2025 9:59:20 AM

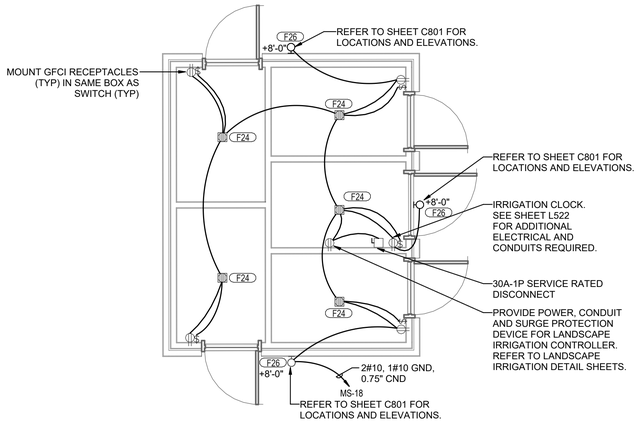

4 Storage Building Electrical Plan

SCALE: 1/4" = 1'-0"

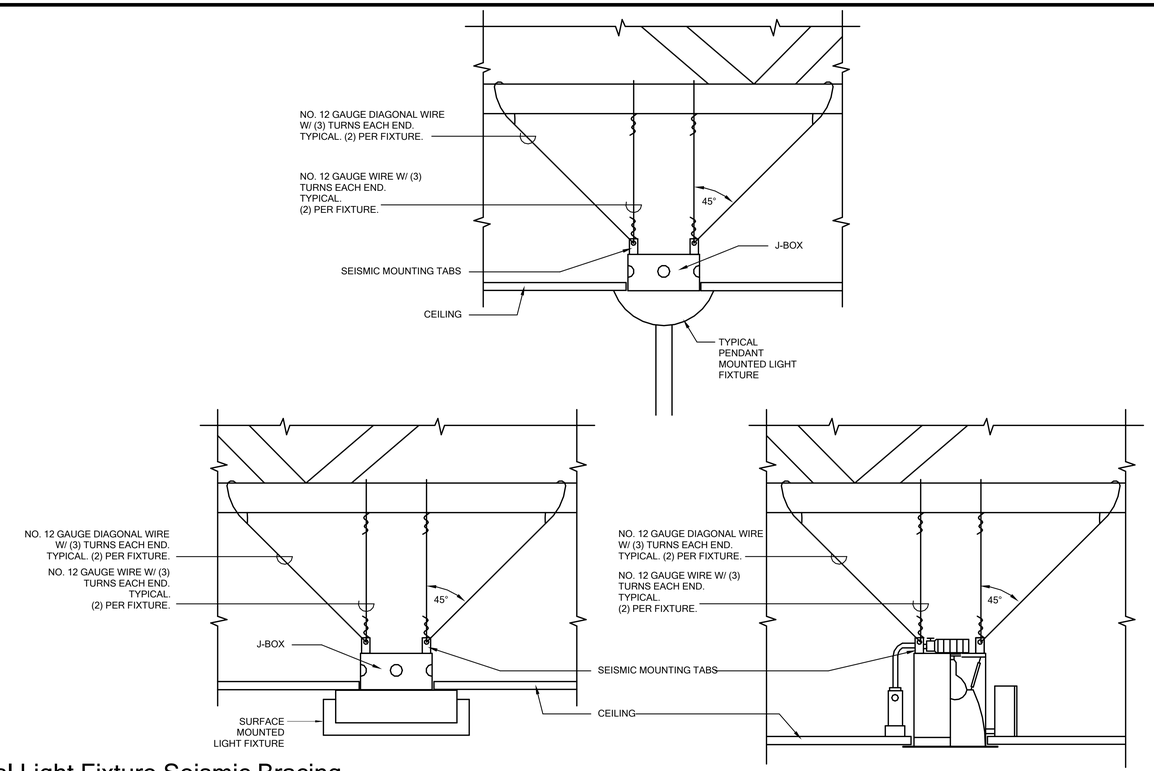

2 Typical Light Fixture Seismic Bracing

NOT TO SCALE

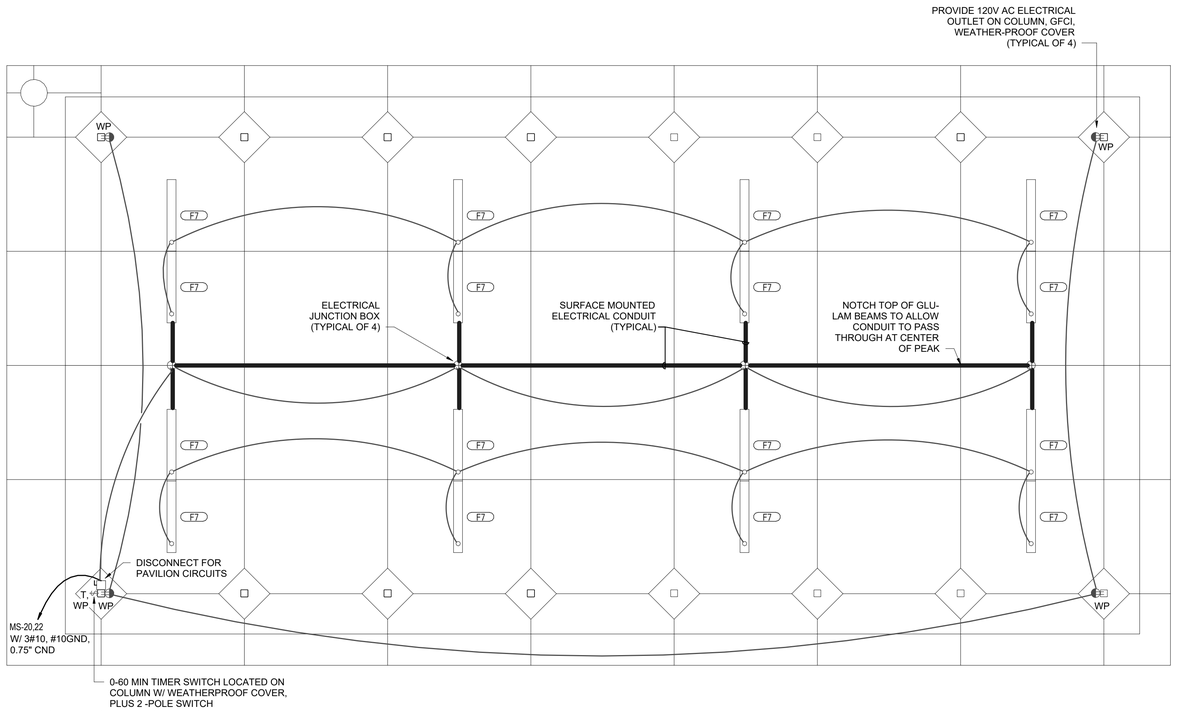

3 Pavilion Electrical Plan

SCALE: 1/4" = 1'-0"

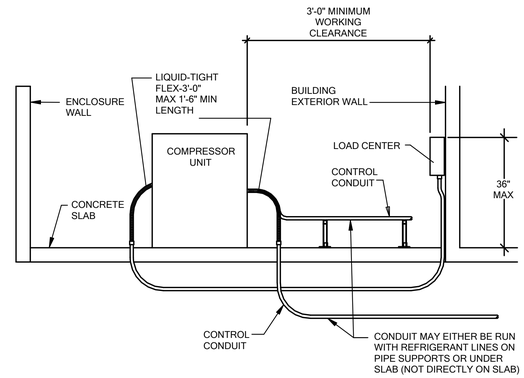

1 Compressor Unit Conduit Detail

NOT TO SCALE

bhd ARCHITECTS
www.bhdarchitects.com
Phone 801.571.0010
Fax 801.571.0303
Toll Free 888.571.0010
65 East Wadsworth Park Drive
Suite 205 Draper, Utah 84020

LICENSED PROFESSIONAL ENGINEER
No. 5148728
DAVID G. HINCKLEY
5/29/25
STATE OF UTAH

SPECTRUM ENGINEERS
324 S. State St., Suite 400
Salt Lake City, UT 84111
800-678-7077
801-328-5151
fax: 801-328-5155
www.spectrum-engineers.com

THE CHURCH OF JESUS CHRIST OF LATTER-DAY SAINTS

Nibley 6 &
Nibley UT West Stake

Approx. 3410 South 1200 West, Nibley, Utah
41.672089, -111.864775

BHD #: 2403
County Parcel: 03:050:0016
Plan Series: Heritage 24
Owner #: 514-4728
Date: 29 May 2025

Drawing Issue and Revision Schedule

#	Date	Description
1	29 May 2025	Bid Documents

Electrical Details

E501

Autodesk Docs://250274 - Nibley 6 Meetinghouse/250274-Elec Central.rvt
5/29/2025 9:59:20 AM

PreQualified Electrical Contractors - 2024			
Company Name	Company Email Address	Company Address	Phone
Bar H Bar Electric	cutter@barhbarelectric.com	3512 E 3100 S St. George, UT 84790	480-686-5978
Breck Electric	breckelectric@gmail.com	1130 South 375 East, Ivins	435-632-5322
Copper Ridge Electric	allen@copperridge-electric.com	342 Commerce St. Bldg 1, Hurricane, UT 84737	435-288-3788
D Blake Electric	office@dblakeelectric.com	685 N Red Rock Rd, St. George	435-673-2559
Ence Electric	enceelectric@gmail.com	851 N Red Rock Rd #B, St. George	435-656-1223
Hunt Electric	carrie@huntelectric.com	1863 W Alexander St, SLC	801-975-8844
iTech Electric	illumisource@gmail.com	2581 N Freeway Drive, Cedar City 84721	435-590-4276
JBI Electric	iburbank@ibico.co	344 Sunland Dr STE 2B, St. George	435-862-4753
KV Electric, Inc.	office@kvelectric.com	188 North 3050 East, St. George	435-673-4696
Red Sands Electric	brian@redsandselectric.com	1716 E 330 S, St. George, UT 84790	435-668-7513
Rich Electric	richelectric.rich@gmail.com	PO Box 447, Santa Clara	435-467-5693
RMS Electric	ryan@rmselectric.net	3811 S 1500 E Cir #211 St. George	435-632-4338
Silver Electric	dh.silverelectric@gmail.com	1598 S 30 E Payson, UT 84651	385-223-0450
Snow Electrical	deanna@snowelectrical.com	1389 South 320 East, St. George	435-673-6653
Southland Electric	Southland@infowest.com	1495 S Blackridge Dr, Bldg B St. George	435-674-5456
Tri State Electric	tony@tristateelectricutility.com	PO Box 1077, St. George, UT 84771	435-619-0347
Triple E Inc.	detriplee@hotmail.com	PO Box 1901, St. George, UT 84771	435-673-1571
Wilkinson Electric	david@wilkinsonelectric.com	952 E Venture Dr St. George	435-673-9641

2 PRE-APPROVED ELECTRICIANS FOR PRIMARY SERVICE & TRANSFORMER

SCALE: NTS

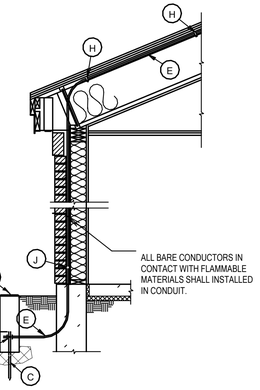

P Cable Installation Detail

SCALE: 1/2" = 1'-0"

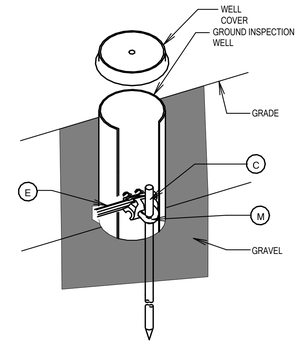

R Ground Inspection Well

NOT TO SCALE

NOTES

1. SUPPORT LIGHTNING CABLES EVERY THREE FEET ALONG ENTIRE RUN USING SPECIFIED FASTENERS.
2. BOND METAL BODIES INTO SYSTEM AS REQUIRED.
3. FURNISH AND INSTALL SURGE PROTECTION DEVICE (SPD) FOR MAIN ELECTRICAL PANEL. REFER TO SPECIFICATIONS.
4. ELECTRICAL CONTRACTOR SHALL COORDINATE ALL CONNECTION REQUIREMENTS TO THE STEEPLE WITH THE GENERAL CONTRACTOR AND STEEPLE SUPPLIER. ELECTRICAL CONTRACTOR SHALL BE ON SITE WHEN THE STEEPLE IS INSTALLED AND MAKE ALL REQUIRED CONNECTIONS TO THE LIGHTNING PROTECTION SYSTEM.
5. REFER TO THE SPECIFICATIONS FOR ADDITIONAL INFORMATION AND REQUIREMENTS.
6. REFER TO THE SPECIFICATIONS FOR FITTING REQUIREMENTS.

LEGEND

- (C) GROUND ROD
- (E) SMOOTH TWIST COPPER CABLE
- (F) PRESSURE TYPE TEE CABLE SPLICER
- (H) COPPER LOOP FASTENER
- (J) LARGE BRONZE CLAMP
- (M) PERPENDICULAR GROUND ROD AND CABLE CLAMP

1 Electrical Details

SCALE: 12" = 1'-0"

bhd ARCHITECTS
www.bhdarchitects.com
Phone 801.571.0010
Fax 801.571.0303
Toll Free 888.571.0010
65 East Wadsworth Park Drive
Suite 205 Draper, Utah 84020

LICENSED PROFESSIONAL ENGINEER
No. 5148728
DAVID G. HINCKLEY
5/29/25
STATE OF UTAH

SPECTRUM ENGINEERS
324 S. State St., Suite 400
Salt Lake City, UT 84111
800-678-7077
801-328-5151
fax: 801-328-5155
www.spectrum-engineers.com

THE CHURCH OF JESUS CHRIST OF LATTER-DAY SAINTS

Nibley 6 & Nibley UT West Stake

Approx. 3410 South 1200 West, Nibley, Utah
41.672089, -111.860775

Owner #: 514-4728
Plan Series: Heritage 24
County Parcel: 03:050:0016
BHD #: 2403
Date: 29 May 2025

Drawing issue and Revision Schedule

#	Date	Description
1	29 May 2025	Bid Documents

Electrical Details

E502

Autodesk Docs://250274 - Nibley 6 Meetinghouse/250274-Elec Central.rvt
5/29/2025 9:59:21 AM

PANELBOARD SCHEDULE

PANEL: LC1 TYPE: Type 1 VOLTS: 120/208 PHASE: 3 WIRES: 4

MOUNTING: Surface LOCATION: MAINS: MLO

FED FROM: M ___ SUBFEED LUGS

AMP: 100 ___ ISO GROUND

___ 200% NEUTRAL

___ SPD

BRANCH BREAKERS

ITEM	AMPS	POLE	WIRE SIZE	CIR. NO.	A	B	C	A	B	C	CIR. NO.	WIRE SIZE	POLE	AMPS	ITEM
CU-7	50	2	2-#8,...	1	2.3			2.1			2	2-#8,...	2	40	CU-6
--	--	--	--	3		2.3			2.1		4	--	--	--	--
CU-5	50	2	2-#8,...	5			2.3			--	6	--	1	--	SPACE
--	--	--	--	7	2.3			--			8	--	1	--	SPACE
CU-3a	60	2	2-#6,...	9		2.9			--		10	--	1	--	SPACE
--	--	--	--	11			2.9			--	12	--	1	--	SPACE

	6748	7305	5200	TOTAL (VA)
Legend:	58	63	43	AMPS/PHASE

CONNECTED LOAD TOTAL 19.3

AIC RATING 10903 AMPS RMS SYSM.

PANELBOARD SCHEDULE

PANEL: LC2 TYPE: Type 1 VOLTS: 120/208 PHASE: 3 WIRES: 4

MOUNTING: Surface LOCATION: MAINS: MLO

FED FROM: M ___ SUBFEED LUGS

AMP: 100 ___ ISO GROUND

___ 200% NEUTRAL

___ SPD

BRANCH BREAKERS

ITEM	AMPS	POLE	WIRE SIZE	CIR. NO.	A	B	C	A	B	C	CIR. NO.	WIRE SIZE	POLE	AMPS	ITEM
CU-1b	60	2	2-#6,...	1	2.9			2.9			2	2-#6,...	2	60	CU-1a
--	--	--	--	3		2.9			2.9		4	--	--	--	--
CU-4	50	2	2-#8,...	5			2.3			--	6	--	1	--	SPACE
--	--	--	--	7	2.3			--			8	--	1	--	SPACE
CU-2a	60	2	2-#6,...	9		2.9			--		10	--	1	--	SPACE
--	--	--	--	11			2.9			--	12	--	1	--	SPACE

	8079	8636	5200	TOTAL (VA)
Legend:	71	76	43	AMPS/PHASE

CONNECTED LOAD TOTAL 21.9

*** PROVIDE 5mA GFCI CIRCUIT BREAKER**

AIC RATING 10903 AMPS RMS SYSM.

PANELBOARD SCHEDULE

PANEL: LC3 TYPE: Type 1 VOLTS: 120/208 PHASE: 3 WIRES: 4

MOUNTING: Surface LOCATION: MAINS: MLO

FED FROM: M ___ SUBFEED LUGS

AMP: 100 ___ ISO GROUND

___ 200% NEUTRAL

___ SPD

BRANCH BREAKERS

ITEM	AMPS	POLE	WIRE SIZE	CIR. NO.	A	B	C	A	B	C	CIR. NO.	WIRE SIZE	POLE	AMPS	ITEM
CU-10	50	2	2-#8,...	1	2.3			2.1			2	2-#8,...	2	40	CU-9
--	--	--	--	3		2.3			2.1		4	--	--	--	--
CU-8	60	2	2-#6,...	5			2.9			--	6	--	1	--	SPACE
--	--	--	--	7	2.9			--			8	--	1	--	SPACE
CU-3b	60	2	2-#6,...	9		2.9			--		10	--	1	--	SPACE
--	--	--	--	11			2.9			--	12	--	1	--	SPACE

	7305	7305	5757	TOTAL (VA)
Legend:	63	63	48	AMPS/PHASE

CONNECTED LOAD TOTAL 20.4

*** PROVIDE 5mA GFCI CIRCUIT BREAKER**

AIC RATING 7065 AMPS RMS SYSM.

PANELBOARD SCHEDULE

PANEL: LC4 TYPE: Type 1 VOLTS: 120/208 PHASE: 3 WIRES: 4

MOUNTING: Surface LOCATION: MAINS: MLO

FED FROM: M ___ SUBFEED LUGS

AMP: 100 ___ ISO GROUND

___ 200% NEUTRAL

___ SPD

BRANCH BREAKERS

ITEM	AMPS	POLE	WIRE SIZE	CIR. NO.	A	B	C	A	B	C	CIR. NO.	WIRE SIZE	POLE	AMPS	ITEM
CU-1d	60	2	2-#6,...	1	2.9			2.9			2	2-#6,...	2	60	CU-2b
--	--	--	--	3		2.9			2.9		4	--	--	--	--
CU-11	60	2	2-#6,...	5			2.9			--	6	--	1	--	SPACE
--	--	--	--	7	2.9			--			8	--	1	--	SPACE
CU-1c	60	2	2-#6,...	9		2.9			--		10	--	1	--	SPACE
--	--	--	--	11			2.9			--	12	--	1	--	SPACE

	8636	8636	5757	TOTAL (VA)
Legend:	76	76	48	AMPS/PHASE

CONNECTED LOAD TOTAL 23.0

*** PROVIDE 5mA GFCI CIRCUIT BREAKER**

AIC RATING 2907 AMPS RMS SYSM.

bhd ARCHITECTS
www.bhdarchitects.com
Phone 801.571.0010
Fax 801.571.0303
Toll Free 888.571.0010
65 East Wadsworth Park Drive
Suite 205 Draper, Utah 84020

LICENSED PROFESSIONAL ENGINEER
No. 5148728
DAVID G. HINCKLEY
5/29/25
STATE OF UTAH

SPECTRUM ENGINEERS
324 S. State St., Suite 400
Salt Lake City, UT 84111
800-678-7077
801-328-5151
fax: 801-328-5155
www.spectrum-engineers.com

THE CHURCH OF JESUS CHRIST OF LATTER-DAY SAINTS

Nibley 6 &
Nibley UT West Stake

Approx. 3410 South 1200 West, Nibley, Utah
41.672089, -111.864775

Date: 29 May 2025
BHD #: 2403
County Parcel: 03.050.0016
Plan Series: Heritage 24
Owner #: 514-4728

Drawing Issue and Revision Schedule

#	Date	Description
1	29 May 2025	Bid Documents

Panelboard Schedules

E601

Autodesk Docs://250274 - Nibley 6 Meetinghouse/250274-Elec Central.rvt
5/29/2025 9:59:21 AM

PANELBOARD SCHEDULE

PANEL: LN | TYPE: NQOD | VOLTS: 120/208 | PHASE: 3 | WIRES: 4

MOUNTING: SURFACE | LOCATION: | MAINS: MLO

FED FROM: M | AMP: 100

___ SUBFEED LUGS
___ ISO GROUND
___ 200% NEUTRAL
___ SPD

BRANCH BREAKERS

ITEM	AMPS	POLE	WIRE SIZE	CIR. NO.	A	B	C	A	B	C	CIR. NO.	WIRE SIZE	POLE	AMPS	ITEM
LTG CHAPEL CHANDELIER	20	1		1	0.6			0.4			2		1	20	LTG 136
LTG CHAPEL COVE	20	1		3		0.6			1.5		4	1-#12,...	1	20	LTG RR/EF-1,5
LTG CHAPEL DOWNLIGHTS	20	1		5			0.3			1.0	6	1-#12,...	1	20	LTG RMS,INT,SERVE/EF-3,4
LTG CHAPEL SPOT	20	1		7	0.1			1.0			8	1-#12,...	1	20	LTG PLAT,CUST,MTRL,EF-6
LTG ROSTRUM CHANDELIER	20	1		9		0.2			0.4		10		1	20	LTG CULTURAL CENTER
LTG ROSTRUM DOWNLIGHTS	20	1		11			0.2			1.0	12		1	20	LTG CULTURAL CENTER
LTG RR,TECH,BSHP,CLRK/EF-2	20	1	1-#12,...	13	0.6			1.2			14		1	20	LTG WAITING, HALLWAY
LTG ROSTRUM COVE	20	1		15		0.6			0.0		16	--	1	20	SPARE
LTG VEST,FOYER,WAITING	20	1		17			0.6			0.0	18	--	1	20	SPARE
SPARE	20	1	--	19	0.0			--			20	--	1	--	SPACE
SPARE	20	1	--	21		0.0			--		22	--	1	--	SPACE
SPARE	20	1	--	23			0.0			--	24	--	1	--	SPACE
					3847	3306	3155	TOTAL (VA)							CONNECTED LOAD TOTAL
					32	28	26	AMPS/PHASE							10.3

Legend:
*** PROVIDE 5mA GFCI CIRCUIT BREAKER**

AIC RATING _____ AMPS RMS SYSM.

PANELBOARD SCHEDULE

PANEL: LS | TYPE: NQOD | VOLTS: 120/208 | PHASE: 3 | WIRES: 4

MOUNTING: SURFACE | LOCATION: | MAINS: MLO

FED FROM: M | AMP: 100

___ SUBFEED LUGS
___ ISO GROUND
___ 200% NEUTRAL
___ SPD

BRANCH BREAKERS

ITEM	AMPS	POLE	WIRE SIZE	CIR. NO.	A	B	C	A	B	C	CIR. NO.	WIRE SIZE	POLE	AMPS	ITEM
LTG VEST,FOYER,WAITING	20	1		1	0.6			0.4			2		1	20	LTG EQUP PLATFORM STRIP
LTG RR,SAC,BSHP,CLRK	20	1		3		0.6			0.1		4		1	20	LTG EQUP PLAT DOWNLIGHTS
LTG ROOMS, MOTHER'S	20	1		5			0.8			0.3	6		1	20	LTG EXTERIOR BLDG
LTG ROOM 152	20	1		7	0.4			0.5			8		2	20	LIGHT POLES
LTG STAKE SUITE	20	1		9		0.8			0.5		10	--	--	--	--
LTG WAITING, HALLWAY	20	1		11			0.4			0.0	12	--	1	20	SPARE
SPARE	20	1	--	13	0.0			0.0			14	--	1	20	SPARE
SPARE	20	1	--	15		0.0			0.0		16	--	1	20	SPARE
SPARE	20	1	--	17			0.0			0.0	18	--	1	20	SPARE
SPARE	20	1	--	19	0.0			--			20	--	1	--	SPACE
SPARE	20	1	--	21		0.0			--		22	--	1	--	SPACE
SPARE	20	1	--	23			0.0			--	24	--	1	--	SPACE
					1853	1872	1489	TOTAL (VA)							CONNECTED LOAD TOTAL
					16	16	12	AMPS/PHASE							5.2

Legend:
*** PROVIDE 5mA GFCI CIRCUIT BREAKER**

AIC RATING _____ AMPS RMS SYSM.

PANELBOARD SCHEDULE

PANEL: MN | TYPE: Type 1 | VOLTS: 120/208 | PHASE: 3 | WIRES: 4

MOUNTING: Surface | LOCATION: | MAINS: MLO

FED FROM: M | AMP: 200

___ SUBFEED LUGS
___ ISO GROUND
___ 200% NEUTRAL
___ SPD

BRANCH BREAKERS

ITEM	AMPS	POLE	WIRE SIZE	CIR. NO.	A	B	C	A	B	C	CIR. NO.	WIRE SIZE	POLE	AMPS	ITEM
RCPT TECHNOLOGY	20	1		1	0.2			0.1			2	1-#12,...	1	20	J-BOX/EF-1 TECHNOLOGY
RCPT TECHNOLOGY	20	1		3		0.2			0.0		4		1	20	PROJECTOR SCREEN
RCPT TECHNOLOGY	20	1		5			0.4			0.5	6		1	20	FACP
OVEN**	50	2		7	4.0			0.2			8		1	20	DRINKING FOUNTAIN *GFCI CB
--	--	--	--	9		4.0			1.0		10		2	20	HEATER FIRE RISER EH-1
REFRIGERATOR	20	1		11			1.5			1.0	12	--	--	--	--
WH-1	20	1		13	0.2			0.2			14		1	20	DRINKING FOUNTAIN *GFCI CB
F-4	20	1		15		1.2			1.0		16		2	20	HEATER STAIR EH-2
F-1a	20	1		17			1.9			1.0	18	--	--	--	--
F-1b	20	1		19	1.9			1.0			20		2	20	HEATER SNOW STOR. EH-3
ERV-1a	25	1	1-#10,...	21		2.2			1.0		22	--	--	--	--
ERV-2a	25	1	1-#10,...	23			2.2			1.2	24		1	20	F-7
F-2b	20	1		25	1.9			1.9			26		1	20	F-6
F-2a	20	1		27		1.9			2.3		28		2	30	WH-2
WH-1	20	1		29			0.2			2.3	30	--	--	--	--
F-3a	20	1		31	1.9			1.2			32		1	20	RP-1
F-3b	20	1		33		1.9			0.2		34		1	20	WH-3
F-5	20	1		35			1.9			0.8	36		1	20	HEAT TAPE*
				37				1.6			38		1	20	HEAT TAPE*
SPARE	20	1	--	39		0.0			0.8		40		1	20	HEAT TAPE*
SPARE	20	1	--	41			0.0			--	42	--	1	--	SPACE
					16266	17566	14746	TOTAL (VA)							CONNECTED LOAD TOTAL
					137	148	123	AMPS/PHASE							48.6

Legend:
*** PROVIDE 5mA GFCI CIRCUIT BREAKER**

AIC RATING 7828 AMPS RMS SYSM.

PANELBOARD SCHEDULE

PANEL: MS | TYPE: Type 1 | VOLTS: 120/208 | PHASE: 3 | WIRES: 4

MOUNTING: Surface | LOCATION: | MAINS: MLO

FED FROM: M | AMP: 125

___ SUBFEED LUGS
___ ISO GROUND
___ 200% NEUTRAL
___ SPD

BRANCH BREAKERS

ITEM	AMPS	POLE	WIRE SIZE	CIR. NO.	A	B	C	A	B	C	CIR. NO.	WIRE SIZE	POLE	AMPS	ITEM
AUTOMATIC DOOR VEST 166	20	1		1	0.0			1.6			2		1	20	HEAT TAPE*
RCPT PULPIT	20	1		3		0.2			0.8		4		1	20	HEAT TAPE*
RCPT ORGAN	20	1		5			0.2			0.8	6		1	20	HEAT TAPE*
F-11	20	1		7	1.2			0.2			8		1	20	DRINKING FOUNTAIN *GFCI CB
WH-1	20	1		9		0.2			1.9		10		1	20	F-3b
F-1c	20	1		11			1.9			1.9	12		1	20	F-10
F-1d	20	1		13	1.9			1.9			14		1	20	F-9
ERV-1b	25	1	1-#10,...	15		2.2			1.2		16		1	20	F-8
RCPT DOOR ACCESS PNL	20	1		17			0.2			1.2	18		1	20	STORAGE BLDG RCPT/LTG
F-2b	20	1		19	1.9			0.8			20		2	20	PAVILION
ERV-2b	25	1	1-#10,...	21		2.2			0.8		22	--	--	--	--
SPARE	20	1	--	23			0.0			0.0	24	--	1	20	SPARE
SPARE	20	1	--	25	0.0			--			26	--	1	--	SPACE
SPARE	20	1	--	27		0.0			--		28	--	1	--	SPACE
SPARE	20	1	--	29			0.0			--	30	--	1	--	SPACE
					9426	9306	6197	TOTAL (VA)							CONNECTED LOAD TOTAL
					83	82	52	AMPS/PHASE							24.9

Legend:
*** PROVIDE 5mA GFCI CIRCUIT BREAKER**

AIC RATING 4516 AMPS RMS SYSM.

PANELBOARD SCHEDULE

PANEL: RN | TYPE: NQOD | VOLTS: 120/208 | PHASE: 3 | WIRES: 4

MOUNTING: SURFACE | LOCATION: | MAINS: MLO

FED FROM: M | AMP: 100

___ SUBFEED LUGS
___ ISO GROUND
___ 200% NEUTRAL
___ SPD

BRANCH BREAKERS

ITEM	AMPS	POLE	WIRE SIZE	CIR. NO.	A	B	C	A	B	C	CIR. NO.	WIRE SIZE	POLE	AMPS	ITEM
RCPT BISHOP 116	20	1		1	0.9			0.7			2		1	20	RCPT ROOM 130, 131, 132, EXT
RCPT CLERK 117	20	1		3		0.7			0.0		4	--	1	20	SPARE
RCPT ROOM 115, 118, 113, 114	20	1		5			0.7			0.9	6		1	20	RCPT ROOM 136
RCPT ROOM 118, 119, 121	20	1		7	0.5			0.6			8	1-#12,...	1	20	RCPT/EF-3/LTG FONT
RCPT CLERK 122	20	1		9		0.7			0.7		10		1	20	RCPT RR, STOR
RCPT BISHOP 123	20	1		11			0.9			0.7	12		1	20	RCPT ROOM 135, HALL
RCPT ROOM 124, 125, 126, EXT	20	1		13	0.7			0.5			14		1	20	RCPT CULT CNTR, PLATFORM
RCPT SERVING AREA	20	1		15		0.2			0.5		16		1	20	RCPT MATERIALS CENTER
RCPT SERVING AREA	20	1		17			0.2			0.7	18		1	20	RCPT HALL, CUST, CULT CNTR
RCPT SERVING AREA	20	1		19	0.4			0.7			20		1	20	RCPT HALL, CULT CNTR
RCPT SERVING AREA	20	1		21		0.4			0.5		22		1	20	RCPT ROSTRUM, CHAPEL
RCPT EQUIPMENT PLATFORM	20	1		23			0.5			0.0	24	--	1	20	SPARE
RCPT EQUIPMENT PLATFORM	20	1		25	0.2			0.0			26	--	1	20	SPARE
SPARE	20	1	--	27		0.0			--		28	--	1	--	SPACE
SPARE	20	1	--	29			0.0			--	30	--	1	--	SPACE
					5240	3780	4680	TOTAL (VA)							CONNECTED LOAD TOTAL
					45	32	40	AMPS/PHASE							13.7

Legend:
*** PROVIDE 5mA GFCI CIRCUIT BREAKER**

AIC RATING _____ AMPS RMS SYSM.

PANELBOARD SCHEDULE

PANEL: RS | TYPE: NQOD | VOLTS: 120/208 | PHASE: 3 | WIRES: 4

MOUNTING: SURFACE | LOCATION: | MAINS: MLO

FED FROM: M | AMP: 100

___ SUBFEED LUGS
___ ISO GROUND
___ 200% NEUTRAL
___ SPD

BRANCH BREAKERS

ITEM	AMPS	POLE	WIRE SIZE	CIR. NO.	A	B	C	A	B	C	CIR. NO.	WIRE SIZE	POLE	AMPS	ITEM
RCPT SAC PREP, VEST, RR	20	1		1	0.5			0.7			2		1	20	RCPT STAKE PRESIDENT
RCPT BISHOP 169	20	1		3		0.9			0.7		4		1	20	RCPT CLERK
RCPT CLERK 168	20	1		5			0.7			0.9	6		1	20	RCPT WAITING, INTERVIEW
RCPT ROOM 162, 165, 166, 167	20	1		7	0.9			0.9			8		1	20	RCPT HIGH COUNCIL
RCPT CLERK 164	20	1		9		0.7			0.5		10		1	20	RCPT ROOM RR, MOTHER'S
RCPT BISHOP 163	20	1		11			0.9			0.7	12		1	20	RCPT CULT CNTR, PLATFORM
RCPT ROOM 159, 160, 161, EXT	20	1		13	0.7			0.7			14		1	20	RCPT CULT CNTR, HALL, STOR
RCPT ROOM 154-158, EXT	20	1		15		1.1			0.7		16		1	20	RCPT CULT CNTR, HALL
RCPT ROOM 152	20	1		17			0.9			0.5	18		1	20	RCPT ROSTRUM, CHAPEL
RCPT EQUP PLATFORM	20	1		19	0.7			0.5			20		1	20	RCPT ROSTRUM, CHAPEL
SPARE	20	1	--	21		0.0			0.0		22	--	1	20	SPARE
SPARE	20	1	--	23			0.0			0.0	24	--	1	20	SPARE
SPARE	20	1	--	25	0.0			--			26	--	1	--	SPACE
SPARE	20	1	--	27		0.0			--		28	--	1	--	SPACE
SPARE	20	1	--	29			0.0			--	30	--	1	--	SPACE
					5760	4680	4680	TOTAL (VA)							CONNECTED LOAD TOTAL
					48	39	39	AMPS/PHASE							15.1

Legend:
*** PROVIDE 5mA GFCI CIRCUIT BREAKER**

AIC RATING _____ AMPS RMS SYSM.

bhd ARCHITECTS
www.bhdarchitects.com
Phone 801.571.0010
Fax 801.571.0303
Toll Free 888.571.0010
65 East Wadsworth Park Drive
Suite 205 Draper, Utah 84020

LICENSED PROFESSIONAL ENGINEER
No. 5148728
DAVID G. HINCKLEY
5/29/25
STATE OF UTAH

SPECTRUM ENGINEERS
324 S. State St., Suite 400
Salt Lake City, UT 84111
800-678-7077
801-328-5151
fax: 801-328-5155
www.spectrum-engineers.com

THE CHURCH OF JESUS CHRIST OF LATTER-DAY SAINTS

Nibley 6 & Nibley UT West Stake

Approx. 3410 South 1200 West Nibley, Utah
41.670809, -111.868775

Owner #: 514-4728
Plan Series: Heritage 24
County Parcel: 03050/0016
BHD #: 2403
Date: 29 May 2025

Drawing Issue and Revision Schedule

#	Date	Description
1	29 May 2025	Bid Documents

Panelboard Schedules

E602

Autodesk Docs://250274 - Nibley 6 Meetinghouse/250274-Elec Central.rvt
5/29/2025 9:59:22 AM

ABBREVIATIONS INDEX

ABBREV.	DESCRIPTION	ABBREV.	DESCRIPTION
#	NUMBER	MH	MANHOLE
AC	ALTERNATING CURRENT	MIC	MICROPHONE
A.F.F.	ABOVE FINISH FLOOR	MIN	MINIMUM
AIC	AMPS INTERRUPTING CAPACITY	MTG	MOUNTING
AM	AMPS METER	MTR	MOTOR
AMP	AMPERE	N/A	NOT APPLICABLE
ANN	ANNUNCIATOR	NC	NORMALLY CLOSED
ATS	AUTOMATIC TRANSFER SWITCH	NEC	NATIONAL ELECTRICAL CODE
AUX	AUXILIARY	NEMA	NATIONAL ELECT. MANUFAC. ASSOC.
AWG	AMERICAN WIRE GAUGE	NFC	NATIONAL FIRE CODE
BC	BARE COPPER	NFPA	NATIONAL FIRE PROTECTION ASSOC.
BFG	BELOW FINISH GRADE	N.I.C.	NOT IN CONTRACT
C	CONDUIT	NO	NORMALLY OPENED
CAB	CABINET	NTS	NOT TO SCALE
CATB	COMMUNITY ANTENNA TELEVISION	OS & Y	OUTSIDE SCREW & YOKE
CATV	CABLE TELEVISION	PB	PUSHBUTTON
CKT	CIRCUIT	PF	POWER FACTOR
CLG	CEILING	PFR	PHASE FAILURE RELAY
CNTR	CONTRACTOR	PNL	PANEL
C.O.	CONDUIT ONLY	PT	POTENTIAL TRANSFORMER
CRT	COMPUTER TERMINAL	PVC	POLYVINYL CHLORIDE CONDUIT
CT	CURRENT TRANSFORMER	(R)	RELOCATE
CU	COPPER	RECEP	RECEPTACLE
C/W	COMPLETE WITH	REQ	REQUIREMENT
DB	DECIBEL	RLA	RATED LOAD AMPS
DC	DIRECT CURRENT	RMS	ROOT MEAN SQUARE
DWG	DRAWING	SE	SERVICE ENTRANCE
(E)	EXISTING	SPEC	SPECIFICATIONS
EC	EMPTY CONDUIT	SPKR	SPEAKER
EG	EMERGENCY GENERATOR	SS	SELECTOR SWITCH
EMT	ELECTRICAL METALLIC TUBING	SW	SWITCH
EX	EXPLOSION PROOF	SWBD	SWITCHBOARD
FACP	FIRE ALARM CONTROL PANEL	SWGR	SWITCHGEAR
FC	FOOT CANDLE	TTB	TELEPHONE TERMINAL BOARD
FT	FOOT	TTC	TELEPHONE TERMINAL CABINET
GFI	GROUND FAULT INTERRUPTER	TV	TELEVISION
GND	GROUND	TYP	TYPICAL
GRC	GALVANIZED RIGID CONDUIT	UG	UNDERGROUND
HP	HORSE POWER	UP	UTAH POWER
HZ	HERTZ	UPS	UNINTERRUPTED POWER SUPPLY
IG	ISOLATED GROUND	V	VOLT (KV-KILOVOLT)
IMC	INTERMEDIATE METALLIC CONDUIT	VAR	VOLT-AMPS/REACTIVE
IN	INCH	VM	VOLT METER
J-BOX	JUNCTION BOX	W	WATTS
KV	KILOVOLT	W/	WITH
KVA	KILOVOLT AMPERES	WH	WATTHOUR METER
KVAR	KILOVARS	W/O	WITHOUT
KW	KILOWATT	WP	WEATHERPROOF
LRA	LOCKED ROTOR AMPS	XFMR	TRANSFORMER
LTG	LIGHTING	XFMR SW	TRANSFER SWITCH
MNF	MANUFACTURER	XP	EXPLOSION PROOF
MATV	MASTER ANTENNA TELEVISION	1P	SINGLE-PHASE
MAX	MAXIMUM	2P	TWO-POLE
MB	MAIN BUS	3P	THREE-POLE
MCC	MOTOR CONTROL CENTER	4P	FOUR-POLE
MCM	1000 CIRCULAR MILLS	∅	PHASE

ENERGY RECOVERY UNIT CIRCUITING...

Load Name	# of Runs	Wire Size	Wire Type	Rating	Apparent Load
ERV-1a	1	1-#10, 1-#10, 1-#10	THWN	25	
ERV-1b	1	1-#10, 1-#10, 1-#10	THWN	25	
ERV-2a	1	1-#10, 1-#10, 1-#10	THWN	25	
ERV-2b	1	1-#10, 1-#10, 1-#10	THWN	25	

FAN CIRCUITING SCHEDULE

Load Name	# of Runs	Wire Size	Wire Type	Rating
F-1a	1	1-#12, 1-#12, 1-#12	THWN	20
F-1b	1	1-#12, 1-#12, 1-#12	THWN	20
F-1c	1	1-#12, 1-#12, 1-#12	THWN	20
F-1d	1	1-#12, 1-#12, 1-#12	THWN	20
F-2a	1	1-#12, 1-#12, 1-#12	THWN	20
F-2b	1	1-#12, 1-#12, 1-#12	THWN	20
F-2b	1	1-#12, 1-#12, 1-#12	THWN	20
F-3a	1	1-#12, 1-#12, 1-#12	THWN	20
F-3b	1	1-#12, 1-#12, 1-#12	THWN	20
F-3b	1	1-#12, 1-#12, 1-#12	THWN	20
F-4	1	1-#12, 1-#12, 1-#12	THWN	20
F-5	1	1-#12, 1-#12, 1-#12	THWN	20
F-6	1	1-#12, 1-#12, 1-#12	THWN	20
F-7	1	1-#12, 1-#12, 1-#12	THWN	20
F-8	1	1-#12, 1-#12, 1-#12	THWN	20
F-9	1	1-#12, 1-#12, 1-#12	THWN	20
F-10	1	1-#12, 1-#12, 1-#12	THWN	20
F-11	1	1-#12, 1-#12, 1-#12	THWN	20

SENSOR GENERAL NOTES

1. THE ELECTRICAL CONTRACTOR SHALL BE RESPONSIBLE FOR CONTACTING THE SENSOR MANUFACTURER FOR PROPER PLACEMENT AND ADJUSTMENT OF OCCUPANCY SENSORS.
2. EACH ZONE SHALL HAVE COVERAGE BY OCCUPANCY SENSOR SUCH THAT NO BLIND SPOT EXIST.
3. UPON COMPLETION OF THE INSTALLATION, THE SYSTEM SHALL BE COMPLETELY COMMISSIONED BY THE MANUFACTURER'S FACTORY AUTHORIZED TECHNICIAN WHO WILL VERIFY ALL ADJUSTMENTS AND SENSOR PLACEMENT TO ENSURE A TROUBLE FREE INSTALLATION.
4. THE LOCATION AND QUANTITIES OF SENSORS SHOWN ON THE DRAWINGS ARE DIAGRAMMATIC AND INDICATE ONLY THE ROOMS WHICH ARE TO BE PROVIDED WITH SENSORS. THE ELECTRICAL CONTRACTOR SHALL PROVIDE ADDITIONAL SENSORS IF REQUIRED TO PROPERLY COVER THE RESPECTIVE ROOM.

GENERAL NOTES

1. CONSULT ARCHITECTURAL REFLECTED CEILING PLANS FOR EXACT LOCATION OF ALL LIGHTING FIXTURES.
2. VERIFY ALL EQUIPMENT DIMENSIONS AND LOCATIONS BEFORE BEGINNING ROUGH IN. CONSULT ALL APPLICABLE CONTRACT DRAWINGS AND SHOP DRAWINGS TO INSURE NEC CODE CLEARANCES REQUIRED AROUND ALL ELECTRICAL EQUIPMENT.
3. CONTRACTOR SHALL VERIFY ALL ELECTRICAL LOADS (VOLTAGE, PHASE, CONNECTION REQUIREMENTS, ETC) OF ALL EQUIPMENT FURNISHED UNDER ALL DIVISIONS, INCLUDING ALL EXISTING EQUIPMENT TO BE RE-USED. REVIEW ALL SHOP DRAWINGS AND EXISTING EQUIPMENT BEFORE BEGINNING ROUGH-IN.
4. SEE APPLICABLE SHOP DRAWINGS FOR ROUGH IN LOCATION OF ALL EQUIPMENT, WIRING DEVICES, ETC. WHERE APPLICABLE MOUNT ALL WIRING DEVICES ABOVE BACK SPLASH EXCEPT THOSE SERVING UNDER COUNTER EQUIPMENT.
5. SEE SPECIFICATION FOR ENERGY SAVING LAMP AND BALLAST REQUIREMENTS.
6. FINISHES OF ALL LIGHT FIXTURES SHALL BE AS SELECTED BY ARCHITECT.
7. THE ELECTRICAL CONTRACTOR SHALL NOTIFY AND COOPERATE WITH THE MECHANICAL CONTRACTOR SUCH THAT NO PIPING, DUCTS, OR EQUIPMENT FOREIGN TO THE OPERATION OF THE ELECTRICAL EQUIPMENT SHALL BE PERMITTED TO BE INSTALLED IN, ENTER OR PASS THRU ELECTRICAL ROOMS OR SPACES, OR ABOVE OR BELOW ELECTRICAL EQUIPMENT IN OTHER AREAS.
8. ELECTRICAL BOXES SHALL NOT BE LOCATED IN MASONRY COLUMNS IN BRICK WALLS OR IN GROUTED CELLS ADJACENT TO OPENINGS. COORDINATE LOCATION OF BOXES WITH MASONRY CONTRACTOR.
9. ALL PENETRATIONS OF FIRE RATED FLOORS, WALLS, AND CEILINGS SHALL BE SEALED WITH APPROVED MATERIAL TO MAINTAIN FIRE RATING OF SURFACE PENETRATED.

COMPRESSOR UNIT CIRCUITING SCHEDULE

Load Name	# of Runs	Wire Size	Wire Type	Rating	True Current
CU-1a	1	2-#6, 1-#10	THWN	60	28
CU-1b	1	2-#6, 1-#10	THWN	60	28
CU-1c	1	2-#6, 1-#10	THWN	60	28
CU-1d	1	2-#6, 1-#10	THWN	60	28
CU-2a	1	2-#6, 1-#10	THWN	60	28
CU-2b	1	2-#6, 1-#10	THWN	60	28
CU-3a	1	2-#6, 1-#10	THWN	60	28
CU-3b	1	2-#6, 1-#10	THWN	60	28
CU-4	1	2-#8, 1-#10	THWN	50	22
CU-5	1	2-#8, 1-#10	THWN	50	22
CU-6	1	2-#8, 1-#10	THWN	40	20
CU-7	1	2-#8, 1-#10	THWN	50	22
CU-8	1	2-#6, 1-#10	THWN	60	28
CU-9	1	2-#8, 1-#10	THWN	40	20
CU-10	1	2-#8, 1-#10	THWN	50	22
CU-11	1	2-#6, 1-#10	THWN	60	28

EXHAUST FAN CIRCUITING SCHEDULE

Load Name	# of Runs	Wire Size	Wire Type	Rating	True Current
J-BOX/EF-1 TECHNOLOGY	1	1-#12, 1#12, 1#12	THWN	20	1
LTG PLAT,CUST,MTRL,EF-6	1	1-#12, 1#12, 1#12	THWN	20	8
LTG RMS,INT,SERVE/EF-3,4	1	1-#12, 1#12, 1#12	THWN	20	9
LTG RR,TECH,BSHP,CLRK/EF-2	1	1-#12, 1#12, 1#12	THWN	20	5
LTG RR/EF-1,5	1	1-#12, 1#12, 1#12	THWN	20	13
RCPT/EF-3/LTG FONT	1	1-#12, 1#12, 1#12	THWN	20	5

ELECTRICAL SYMBOL SCHEDULE

1. SEE FIXTURE SCHEDULE FOR TYPE, MOUNTING AND WATTAGE.
2. HEIGHT MEASURED TO CENTER LINE OF THE BOX FROM THE FINISH FLOOR.
3. REFER TO DRAWINGS FOR DIRECTIONAL ARROWS.
4. SUBSCRIPT KEYS SWITCH TO FIXTURES CONTROLLED.
5. NEMA TYPE 'ND' NON-FUSED UNLESS NOTED 'F' (FUSED), USE 'HD' 480 V.
6. HEIGHT MEASURED TO TOP OF BOX FROM FINISH FLOOR.
7. PROVIDE H.O.A. AND S.S. PUSHBUTTONS AS REQUIRED.
8. DOUBLE ARROWS DENOTE A DOUBLE FACE UNIT.
9. COORDINATE WITH MILLWORK SHOP DRAWINGS AND ELEVATIONS FOR HEIGHT.
10. SUBSCRIPT DENOTES NEMA CONFIGURATION.
11. HEIGHT MEASURED TO BOTTOM OF THE BOX FROM FINISH FLOOR.
12. COORDINATE WITH DOOR HARDWARE SUPPLIER.

STANDARD MOUNTING HEIGHT UNLESS OTHERWISE NOTED ON PLANS

SYMBOL	DESCRIPTION	MOUNTING HEIGHT	NOTES
	ONE CIRCUIT, HOME RUN TO PANEL		
	CONDUIT RUN CONCEALED IN WALL OR CEILING		
	CONDUIT/CIRCUIT CONTINUATION		
	WALL LIGHT FIXTURE	AS NOTED	1.
	FLOOD OR TRACK FIXTURE	AS NOTED	
	WALL MOUNTED EXIT LIGHT	AS NOTED	1.3.8.
$D	VARIABLE INTENSITY SWITCH	SEE SPECS.	6.
$X	LOW VOLTAGE WALLSTATION (SUBSCRIPT INDICATES CONFIGURATION & CONTROL SEQUENCE) SEE DIAGRAM	SEE SPECS.	6., SEE DIAGRAM, SPEC.
	WALL MOUNTED OCCUPANCY SENSOR	SEE SPECS.	
	DUPLEX RECEPTACLE UPPER OUTLET SWITCH CONTROLLED	SEE SPECS.	9. 11.
	DUPLEX RECEPTACLE	SEE SPECS.	9. 11.
A	DUPLEX RECEPTACLE	SEE SPECS.	9.
W	ELECTRIC WATER COOLER RECEPTACLE	SEE SPECS.	SEE DIAGRAM
WP	WEATHERPROOF RECEPTACLE	SEE SPECS.	2. 9.
IG	ISOLATED GROUND RECEPTACLE	SEE SPECS.	2. 9.
	GROUND FAULT INTERRUPTER DUPLEX RECEPTACLE	SEE SPECS.	9. 11.
	DUPLEX RECEPTACLE EMERGENCY POWER (RED)	SEE SPECS.	9. 11.
	SPECIAL PURPOSE OUTLET	SEE SPECS.	10. WITH CAP. 11.
	FOURPLEX RECEPTACLE	SEE SPECS.	9. 11.
	GROUND FAULT INTERRUPTER FOURPLEX RECEPTACLE	SEE SPECS.	9. 11.
FB	FLOOR BOX	SEE SPECS.	SEE DIAGRAM, SPEC.
J	JUNCTION BOX ('F' IN FLOOR)	SEE SPECS.	
	MOTOR OUTLET	SEE SPECS.	
EQ 24	EQUIPMENT NUMBER	SEE SPECS.	
	PANEL BOARD	SEE SPECS.	
	MAIN DISTRIBUTION PANEL	SEE SPECS.	
	TELEPHONE TERMINAL BOARD		
EQ	EQUIPMENT NUMBER		
$T	MANUAL STARTER W/ THERMAL OVERLOAD		
	CEILING LIGHT FIXTURE	CEILING	1.
	RECESSED DOWNLIGHT FIXTURE	CEILING	1.
	LIGHT FIXTURE	AS NOTED	1
	EGRESS LIGHT FIXTURE	AS NOTED	UNSWITCHED
	CEILING MOUNTED EXIT LIGHT	CEILING	1.3.8.
	CEILING MOUNTED OCCUPANCY SENSOR	CEILING	6.
PP	POWER PACK	CEILING	SEE DIAGRAM, SPEC.
RC X	DIGITAL ROOM CONTROLLER (SUBSCRIPT INDICATES NUMBER OF RELAYS)	CEILING	SEE DIAGRAM, SPEC.
	DIGITAL DAYLIGHT SENSOR	CEILING	SEE DIAGRAM, SPECIFICATION
A	LIGHT FIXTURE (LETTER DESIGNATES TYPE)		

bhd ARCHITECTS
www.bhdarchitects.com
Phone 801.571.0010
Fax 801.571.0303
Toll Free 888.571.0010
65 East Wadsworth Park Drive
Suite 205 Draper, Utah 84020

LICENSED PROFESSIONAL ENGINEER
No. 5148728
DAVID G. HINCKLEY
5/29/25
STATE OF UTAH

SPECTRUM ENGINEERS
324 S. State St., Suite 400
Salt Lake City, UT 84111
800-678-7077
801-328-5151
fax: 801-328-5155
www.spectrum-engineers.com

THE CHURCH OF JESUS CHRIST OF LATTER-DAY SAINTS

Nibley 6 &
Nibley UT West Stake

Approx. 3410 South 1200 West, Nibley, Utah
41.672089, -111.864775

Owner #: 514-4728
Plan Series: Heritage 24
County Parcel: 03:050:0016
BHD #: 2403
Date: 29 May 2025

Drawing Issue and Revision Schedule

#	Date	Description
1	29 May 2025	Bid Documents

Symbols, Schedules and Notes

E603

Autodesk Docs://250274 - Nibley 6 Meetinghouse/250274-Elec Central.rvt
5/29/2025 9:59:24 AM

FIXTURE SCHEDULE

TYPE	DESCRIPTION	LAMP	LAMP TEMP	ELECTRICAL DATA	MFR 1	MODEL 1	MFR 2	MODEL 2	MFR 3	MODEL 3	MFR 4	MODEL 4	MFR 5	MODEL 5	MFR 6	MODEL 6
F1	2' x 4' RECESSED FIXTURE FLAT PANEL	4600 LUMEN LED	3500 K	120 V/1-0.0	ALPHALITE	BFPL-24-L-8-35	METALUX	24FP4735C	HE WILLIAMS	LP-2-4-L50-8-35	LSI	SFP24-LED-50-UE-DIM-35	LITHONIA	CPX 2X4 4000LM 35K M2	HUBBELL	CBT24-A-LSCS-EDD
F2	1'X4' RECESSED MOUNTED LOW PROFILE TROFFER 0-10V DIMMING DRIVER, 1% DIMMING (CULTURAL CENTER)	6000 LUMEN LED	3500 K	120 V/1-0.0	METALUX	14-G-R-FA-LD5-60-A19/ 156-UNV-L835-CD-1-U-D F-14W-U	HE WILLIAMS	50-F-S-1-4-L65-8-35-S-AF19 156-DIM-120	COLUMBIA	LJT-14-35-VL-G-FS-A19-E D-U-FK14						
F2E	1'X4' RECESSED MOUNTED LOW PROFILE TROFFER 0-10V DIMMING DRIVER, 1% DIMMING (CULTURAL CENTER)	6000 LUMEN LED	3500 K	120 V/1-0.0	METALUX	14-G-R-FA-LD5-60-A19/ 156-UNV-EL10-L835-CD-1-U-DF-14W-U	HE WILLIAMS	50-F-S-1-4-L65-8-35-S-AF19 156-EM10W-DIM-120	COLUMBIA	LJT-14-35-VL-G-FS-A19-E D-ELL14-U-FK14						
F3	1'x4' RECESSED MOUNTED FLAT PANEL	4000 LUMEN LED	3500 K	120 V/1-0.0	DAY-BRITE	1-FXP-38L-835-4-DS-UNV -DIM-FMA14FP	METALUX	14FPX-42-L835-CD-1-DF-14 W-U	HE WILLIAMS	BP-1-4-LS-8-CS-DFK-124 8W	LSI	SFP14-LED-40-UE-DIM-35-6427 93	EELP	VLFP6-B-14-40L-QT-35/VLFP 6-B-DWK14 FP6-B-SURF	COLUMBIA	CBT14-A-LSCS-EDD/FK14
F3E	1'x4' SURFACE MOUNTED FLAT PANEL WITH 90 MIN EM BATTERY	4000 LUMEN LED	3500 K	120 V/1-0.0	DAY-BRITE	1-FXP-38L-835-4-DS-UNV -DIM-FMA14-EMLED	METALUX	14FPX-42-EL7W-L835-CD-1 -DF-14W-U	HE WILLIAMS	BP-1-4-LS-8-CS-DFK-124 8W-EM PL/15/213(WHT)-EM/10W-DIM-UNV-SURF	LSI	SFP14-LED-40-UE-DIM-35-EM-642793	EELP	VLFP6-B-14-40L-QT-35/VLFP 6-B-DWK14/EB	COLUMBIA	CBT14-A-LSCS-EDD-ELL14/FK14
F4E	2' WALL MOUNTED VANITY FIXTURE WITH ACRYLIC MOUNT ABOVE MIRRORS AT 7'-0". SEE SHEET A408. 90 MIN BATTERY.	2332 LUMEN LED	3500 K	120 V/1-0.0	LSI	W442-LED-SS-30K-UE	METALUX	2BCLED-LD4-16SL-F-UNV-L835-CD1-U	HE WILLIAMS	29-2-L27/835-AF-(L15)-DIM-UNV	LSI	W442-LED-SS-WW-UE	LITHONIA	BLWP2 20L ADP GZ10 LP835	COLUMBIA	CWM2-30VWSM-FRFP-EDU
F5	4' WALL MOUNTED VANITY FIXTURE WITH ACRYLIC MOUNT ABOVE MIRRORS AT 7'-0". SEE SHEET A408.	3164 LUMEN LED	3500 K	120 V/1-0.0	LSI	W444-LED-SS-30K-UE	METALUX	4BCLED-LD4-24HL-F-UNV-L835-CD1-U	HE WILLIAMS	29-4-L54/835-AF-(L30)-DIM-UNV	LSI	W444-LED-SS-WW-UE	LITHONIA	BLWP4 40L ADP GZ10 LP835	COLUMBIA	CWM4-30VWSM-FRFP-EDU
F6	4' LED STRIP LIGHT WITH LENS, SURFACE OR CHAIN SUSPENDED, WITH WIRE GUARD.	2574 LUMEN LED	3500 K	120 V/1-0.0	DAY-BRITE	FSS430L835-UNV-DIM / FSSWG4	METALUX	4SNLED-LD5-26SL-L-W-UNV-L835-CD1-U-WG/SNF-4FT-U	HE WILLIAMS	76-4-L53/835-WG-7614 -DIM-UNV	LSI	AST-4-4L-SA-UNV-835	LITHONIA	CSS L48 ALO3 MVOLT SWW3 80CRI	COLUMBIA	MPS4-30VW-FW-EDU CSHC
F7	4' VANDAL RESISTANT	4600 LUMEN LED	4000 K	120 V/1-0.0	NEW STAR	VIC-4-N-L2-40-1C-RW-12-WH-DM	KENALL	MLHA12-4-45L40K-ICC-1-120	CERTOLUX	VRSE-3556-48-LED-8-40K -048L-UNV						
F8	2' LED MULTIPURPOSE LINEAR, FLAT LENS	2000 LUMEN LED	3500 K	120 V/1-0.0	LEDALITE	TC08L83515WN-SN-02-DE	COOPER IO LED	LM-05L-935-120-ID-UNV-S-SM-STD-XX	HE WILLIAMS	CXC-2'00-L4/835-25-D-DIM-UNV	LSI	CUS-2'-LSC1-1100LP-DIM10-MVOLT-120X120D-35K-90-CL-SI	FOCAL POINT	FCOL-HN-500LF-35K-1C-UNV-LD1-CV-2'	LITECONTROL	30-CC-AI-2'-WHS-35K9-I05 0-D01-UNV
F9	8' LED MULTIPURPOSE LINEAR, FLAT LENS. (2) 4 FT SECTIONS ARE ALSO ACCEPTABLE.	10000 LUMEN LED	3500 K	120 V/1-0.1	LEDALITE	TC08L83550WN-SN-08-DE	COOPER IO LED	LM-15L-935-120-ID-UNV-S-SM-STD-XX	HE WILLIAMS	CXC-8'00-L10/835-25-D-DIM-UNV	LSI	CUS-8'-LSC1-1100LP-DIM10-MVOLT-120X120D-35K-90-CL-SI	FOCAL POINT	FCOL-HN-1000LF-35K-1C-UNV-LD1-CV-8' 35K 80 CRI WH	LITECONTROL	30-CC-AI-8'-WHS-35K9-I10 0-D01-UNV
F9B	LED COVE LIGHT	LED	3500 K	120 V/1-0.0	LITHONIA	ZL1D-L96-6000LM-FST-120V-30K-80CRI	METALUX	8TSNLED-LD5-61SL-LW-UNV-L835-CD1-U	HE WILLIAMS	75R-8-L60/830-DIM-UNV	COLUMBIA	MPS8-35VW-FW-EDU				
F9C	LED COVE LIGHT	LED	3500 K	120 V/1-0.1	TIVOLI	CVLID-30K-XX-120	COOPER IO LED	CS-SL-8SCT-120-ID-UNV-W-SA-STD-1F	CURRENT-GLI	GEWWNL2-30K-A						
F9E	8' LED MULTIPURPOSE LINEAR, FLAT LENS WITH 90 MIN BATTERY PACK. (2) 4 FT SECTIONS ALSO ACCEPTABLE.	9250 LUMEN LED	3500 K	120 V/1-0.1	LEDALITE	TC08L83550WN-SN-08-DE-EM	COOPER IO LED	LM-15L-935-120-ID-UNV-S-SM-STD-XX-EM	HE WILLIAMS	CXC-8'00-L10/835-25-D-DM-UNV-EM	LSI	S8-LED-100L-UNV-DIM135-80CRI-EM	LITHONIA	SS-2-32-MVOLT-APLP	LITECONTROL	30-CC-AI-8'-WHS-35K9-I100-D01-UNV-EM
F10	4' LED MULTIPURPOSE LINEAR, FLAT LENS	3500 LUMEN LED	3500 K	120 V/1-0.0	LEDALITE	TC08L83515WN-SN-04-DE	COOPER IO LED	LM-05L-935-120-ID-UNV-S-SM-STD-XX	HE WILLIAMS	CXC-4'00-L6/835-25-D-DIM-UNV	LSI	4-LSC1-1100LP-DIM10-MVOLT-120X120D-35K-90-CL-SI	LITHONIA	ZL1N L48 3000LM FST MVOLT 35K 80CRI WH	LITECONTROL	30-CC-AI-4'-WHS-35K9-I050-D01-UNV
F11	6" APERTURE RECESSED DOWNLIGHT WITH LED RETROFIT KIT AND SHALLOW HOUSING. WHITE TRIM AND LENS. 1-1/4" CEILING FLANGE.	1200 LUMEN LED	3500 K	120 V/1-0.0	CURRENT-GLI	LRXBR61X9CWVQ/FRAME6R	HALO	LT560WH12930 E7ICAT	LITON	CH618UE-D10 CR6L22SW-T30	ELITE	RL679-1100L-CCT	LITHONIA	WF6 LED 27K30K35K MVOLT 90CRI MW	DMF	DRDH-N-IC-6-100/ DRD2M-10-9-30-A DRD2T-R-6-S-WH
F12	6" APERTURE DOWNLIGHT WITH WHITE TRIM. DAMP LOCATION RATED.	2000 LUMEN LED	3500 K	120 V/1-0.0	LIGHTOLIER	6-R-N-P6R-DL-20-935-M-CC-Z10-U	HALO	PR62D010-PR6M34MDMW	HE WILLIAMS	6DR-L40/835-(L20)-DIM-UNV-OW-OF-CS-N-F1	ELCO	E6LFU20D-E610L2035W	LITHONIA	LBR6-AL02-20LM-35K-AR-LSS-MWD-MVOLT	PRESCOLITE	LF6SL-6LFSL20L35K
F13	6" APERTURE DOWNLIGHT WALL WASH WITH WHITE TRIM. INCANDESCENT LAMP HOUSING, WHITE TRIM, LED LAMP LABEL	1600 LUMEN LED A21 LAMP	3500 K	120 V/1-0.0	LIGHTOLIER	L6RAZ10UVA / L6R15835VA / L6RDD	PDS	HC615D010-HM612835-61R WWC	HE WILLIAMS	6DR-TL-L10/835-DIM-UNV-OW-OF-CS-N-F1	ELCO	EL7ICA-EL25W	LITHONIA	LDN6-35/20-LW6AR-LSS-MVOLT-GZ10-TRW	LITON	LH7-LRS95C-T35
F14	6" APERTURE DOWNLIGHT WITH WHITE TRIM. DAMP LOCATION RATED, IC RATING	2000 LUMEN LED	3500 K	120 V/1-0.0	CURRENT-GLI	LRXBR61X9CWVQ/FRAME6R	PEACHTREE	8BLRD-25-30K-80-SH-TRW-120	SPECTRUM	RDF08LEDXT 30L 40K-MD EX BH27 RD8FXT SG	ELCO	E8LF-U-20-D/E810L-2040W	LITON	CH828UE-D10 CR8L225W-T30	HALO	PR820D010 PR8M34MDMW
F14A	6" APERTURE DOWNLIGHT WITH WHITE TRIM. DAMP LOCATION RATED, IC RATING 4000K	2000 LUMEN LED	4000 K	120 V/1-0.0	CURRENT-GLI	LRXBR61X9CWVQ/FRAME6R	PEACHTREE	8BLRD-25-40K-80-SH-TRW-120	SPECTRUM	RDF08LEDXT 30L 40K-MD EX BH27 RD8FXT SG	ELCO	E8LF-U-20-D/E810L-2040W	LITON	CH828UE-D10 CR8L22SW-T30	HALO	PR820D010 PR8M34MDMW
F15	WALL SCONCE WITH SEMISPHERICAL ACRYLIC LENS AND ALUMINUM TRIM RING TO MATCH PENDANT FIXTURES. SEE ARCHITECTURAL FOR MOUNTING.	LED	3500 K	120 V/1-0.0	Visa Lighting Milwaukee WI USA (800-788-VISA)	CB3430										
F17	30" DIAMETER DOUBLE SEALED BOWL FIXTURE WITH MACHINED ALUMINUM TRIM RING, BOTTOM OF FIXTURES AT +13'-0" ABOVE FINISHED FLOOR	LED VARIES, 9600 LUMENS	3500 K	120 V/1-0.1	VICTOR ILLUMINATING	VLD4130-ACC 90LED-3K-SA-XX-120-SD-DM7	EVERGREEN	SHP-RBR-P30-136L-9-WF9-30K-DIM-CLPT	LIGHTWAY	MONH-30-LED-L1A-2-SCBA-WSA	CRAFT METAL	SC3612L-EEF-120/277 PC-SA-AD-D1-LDS DBL BOWL	SPECTRUM	SPEC18-0004C	LE LAMPISTE	BWL-S-D-36/XX/36-LED 106-DBWL-LDS-CLA-SA
F18	36" DIAMETER DOUBLE SEALED BOWL FIXTURE WITH MACHINED ALUMINUM TRIM RING, BOTTOM OF FIXTURES AT +13'-0" ABOVE FINISHED FLOOR	LED VARIES, 9600 LUMENS	3500 K	120 V/1-0.1	VICTOR ILLUMINATING	VLD4136-ACC 90LED-3K-SA-XX-120-SD-DM7	EVERGREEN	SHP-RBR-P36-156L-9-WF9-30K-DIM-CLPT	LIGHTWAY	MONH-36-LED-L1A-2-SCBA-WSA	CRAFT METAL	SC1809S-EDS-120/277 PC-SA-AD-D1-LED	SPECTRUM	SPEC18-0007B	LE LAMPISTE	BWL-WS-D-13/7/5-LED 13-LDS-CLA-SA
F22A	SURFACE CYLINDRICAL SPOT LAMP HOLDER	1-PAR 38 LED REPLACEMENT 2000LM DIMMABLE	3500 K	120 V/1-0.0	NORA	NTH-131W / NT-366W	HALO	L80815FL9030P	SATCO	90-1502	SISTEMALUX	1590-830-45-120-01-LTE	JUNO	T283L 30K 80CRI PDIM FL WH	LITON	LT850-W/ LP913W
F24	SURFACE CERAMIC LAMP HOLDER. PROVIDE METAL WIRE GUARD, PROVIDE LED LAMP	1-A19 LED REPLACEMENT 1000LM DIMMABLE	3500 K	120 V/1-0.0	LEVITON	49875	P&S	274	ARROWHART	604	BRYANT	5228				
F26	WALL MOUNTED. WET LOCATION FINISH TO MATCH PARKING LOT FIXTURES. PROVIDE FIXTURE WITH VANDAL RESISTANT HARDWARE, 90 MIN BATTERY	1500 LUMEN LED	4000 K	120 V/1-0.0	TRACELITE	TLED112P-42-VS-4K-WH -TRH	LUMARK	AXCS2A DDBXD	STONCO	LPW16-58-WW-G3 UNV-SCBA	LSI	WPSLS-2L-30-XX	LITHONIA	WSQ LED P1 40K SR3 120 BBW PE	HUBBELL	SG1-20-4K7-3-UNV-A4-WHS
F27	PARKING LOT LIGHTING/SQUARE STEEL POLE (NOT HINGED) 18' POLE.	LED		208 V/1-0.1	GARDCO	ECF-S-32L-530-NW-G2 AR-3-UNV-DD-F1-SCBA	BEACON	VP1-160L-50-4K7-3-UNV-A4 -WHS/RSS-B-S-18-40-A-1-B 3-WHS	ALS	P-50-40-3M-RL-WH-UD RSHA-5183-AB-D1-WH	MCGRAW EDISON	GLEON-AE-01-LED-E1-T3-SCBA/SSA18D4-H-SCBA-DM10-BC	LITHONIA	RSX1 LED P2 40K R3 MVOLT SPA DDBXD SSAH 18 4G DM19AS DDBXD	LSI	MRS-LED-6L-SIL-3-UNV-DIM-30-70C RI-XX-4RHPB3-A125-18'-S-XX
F28	2' x 4' RECESSED FIXTURE WITH CENTER ACRYLIC LENS	4500 LUMEN LED	3500 K	120 V/1-0.1	ALPHALITE	ILT-CB-24L(45S2)/835-FK	METALUX	24CZ2-45-UNV-L835-CD1U-FK	HE WILLIAMS	LT24-L52/835-AF-DIM-UNV-FK	LSI	LPASC24-LED-48LUNV-DIM1-35-FK24	LITHONIA	BLC 2X4 5000LM 35K ADSM DGA24	COLUMBIA	LCAT24-30MLG-EDU FK24
F28E	2' x 4' RECESSED FIXTURE WITH CENTER ACRYLIC LENS, 90 MIN BATTERY.	4500 LUMEN LED	3500 K	120 V/1-0.0	ALPHALITE	ILT-CB-24L(45S2)/835-FK-EM	METALUX	24CZ2-45-UNV-L835-CD1U-FK-EM	HE WILLIAMS	LT24-L52/835-AF-DIM-UNV-FK-EM	LSI	LPASC24-LED-48LUNV-DIM1-35-FK24-EM	LITHONIA	BLC 2X4 5000LM 35K ADSM DGA24-EM	COLUMBIA	LCAT24-30MLG-EDU FK24-EM
F29	EXIT SIGN. PROVIDE DIRECTIONAL ARROWS AS SHOWN ON PLANS. PROVIDE CLEAR VANDAL SHIELD FOR FIXTURES IN CULTURAL CENTER.	LED INCLUDED	0 K	120 V/1-0.0	COMPASS	CEG	EVENLITE	TLX-EM-GU-W	HE WILLIAMS	EXIT-G-EM-WHT-D	LSI	EMS-G-WB-WH	ISOLITE	RL-EM-G-WH-(WG2)	CHLORIDE	VEGWEM

Lighting Fixture Symbols

	F1
	F1E
	F2
	F2E
	F3
	F3E
	F4
EM	F4E
	F5
EM	F5E
	F6
	F7
	F8
	F9
	F9E
	F10E
	F11
	F12
	F13
	F14
	F15
	F17
	F18
	F19
	F21
	F22
	F24
	F26E
	F28
	F28E
	F29
	F30

FIXTURE SCHEDULE NOTES:

1. SEE SHEET C703 FOR POLE BASE DETAIL.
2. ORIENT POLE BASE SO POLE MAY BE LOWERED WITHOUT HITTING ANY OBSTRUCTION.
3. SEE SPECIFICATIONS 265600 FOR FIXTURE AND POLE FINISH AND COLOR.
4. THE FIXTURE DESCRIPTION AND SPECIFICATIONS TAKES PRECEDENCE OVER CATALOG NUMBER.
5. ALL LED FIXTURES SHALL BE LISTED BY THE DESIGN LIGHTS CONSORTIUM OR BE ENERGY STAR LABELED. LEDS SHALL HAVE A MINIMUM 100 LM/WATT EFFICIENCY AND A 5 YEAR WARRANTED LIFE. LED LAMP DRIVERS SHALL HAVE INTEGRAL SURGE PROTECTION.
6. REFER TO SPECIFICATION FOR FLUORESCENT BALLAST REQUIREMENTS.
7. ALL LED LAMPS SHALL HAVE DRIVERS COMPATIBLE WITH LINE VOLTAGE DIMMERS.
8. THE INDICATED LED LAMP LM/WATT EFFICIENCIES INDICATED ARE MINIMUM VALUES.

bhd ARCHITECTS
www.bhdarchitects.com
Phone 801.571.0010
Fax 801.571.0303
Toll Free 888.571.0010
65 East Wadsworth Park Drive
Suite 205 Draper, Utah 84020

LICENSED PROFESSIONAL ENGINEER
No. 5148728
DAVID G. HINCKLEY
5/29/25
STATE OF UTAH

SPECTRUM ENGINEERS
324 S. State St., Suite 400
Salt Lake City, UT 84111
800-678-7077
801-328-5151
fax: 801-328-5155
www.spectrum-engineers.com

THE CHURCH OF JESUS CHRIST OF LATTER-DAY SAINTS

Nibley 6 & Nibley UT West Stake

Approx. 3410 South 1200 West, Nibley, Utah
41.672089, -111.864775

Owner #: 514-4728
Plan Series: Heritage 24
County Parcel: 03:030:0016
BHD #: 2403
Date: 29 May 2025

Drawing Issue and Revision Schedule

#	Date	Description
1	29 May 2025	Bid Documents

Schedules and Notes

E604

Autodesk Docs://250274 - Nibley 6 Meetinghouse/250274-Elec Central.rvt
5/29/2025 9:59:25 AM

DISTRIBUTION PANEL SCHEDULE

Switchboard: M

Location: Custodial 109 **Volts:** 120/208 **A.I.C. Rating:** 17,959
Supply From: **Phases:** 3 **Mains Type:** MCB
Mounting: **Wires:** 4 **Mains Rating:** 600
Enclosure: **SPD:** CATEGORY C

CKT	CIRCUIT DESCRIPTION	# OF...	AMPS	LOAD	REMARKS
1	LC1	3	100	19.3	
2	LC2	3	100	21.9	
3	LC4	3	100	23.0	
4	LC3	3	100	20.4	
5	RS	3	100	15.1	
6	LS	3	70	5.2	
7	MS	3	125	24.9	
8	RN	3	100	13.7	
9	LN	3	70	10.3	
10	MN	3	200	48.6	
		TOTAL CONN. LOAD:		202.4	
		TOTAL AMPS:		562	

Legend:

Distribution Wiring Schedule

Load Name	# of Runs	Wire Size	Wire Type	Breaker Rating	True Current	Neutral Rating	Bussing
Short Circuit Rating							
PANEL LC1	1	3-#1/0, 1-#1/0, 1-#4	AI XHHW2	100 A	54 A	100%	ALUMINUM
10000							
PANEL LC2	1	3-#1/0, 1-#1/0, 1-#4	AI XHHW2	100 A	61 A	100%	ALUMINUM
10000							
PANEL LC3	1	3-#1/0, 1-#1/0, 1-#4	AI XHHW2	100 A	57 A	100%	ALUMINUM
10000							
PANEL LC4	1	3-#1/0, 1-#1/0, 1-#4	AI XHHW2	100 A	64 A	100%	ALUMINUM
10000							
PANEL LN	1	3-#1/0, 1-#1/0, 1-#4	AI XHHW2	100 A	29 A	100%	ALUMINUM
10000							
PANEL LS	1	3-#2, 1-#2, 1-#6	AI XHHW2	70 A	16 A	100%	ALUMINUM
10000							
PANEL M	2	2 runs of 3-#500, 1-#500, 1-#2/0	AI XHHW2	600 A	571 A	100%	ALUMINUM
22000							
PANEL MN	1	3-#250, 1-#250, 1-#2	AI XHHW2	200 A	136 A	100%	ALUMINUM
10000							
PANEL MS	1	3-#2/0, 1-#2/0, 1-#4	AI XHHW2	125 A	72 A	100%	ALUMINUM
10000							
PANEL RN	1	3-#1/0, 1-#1/0, 1-#4	AI XHHW2	100 A	40 A	100%	ALUMINUM
10000							
PANEL RS	1	3-#1/0, 1-#1/0, 1-#4	AI XHHW2	100 A	42 A	100%	ALUMINUM
10000							

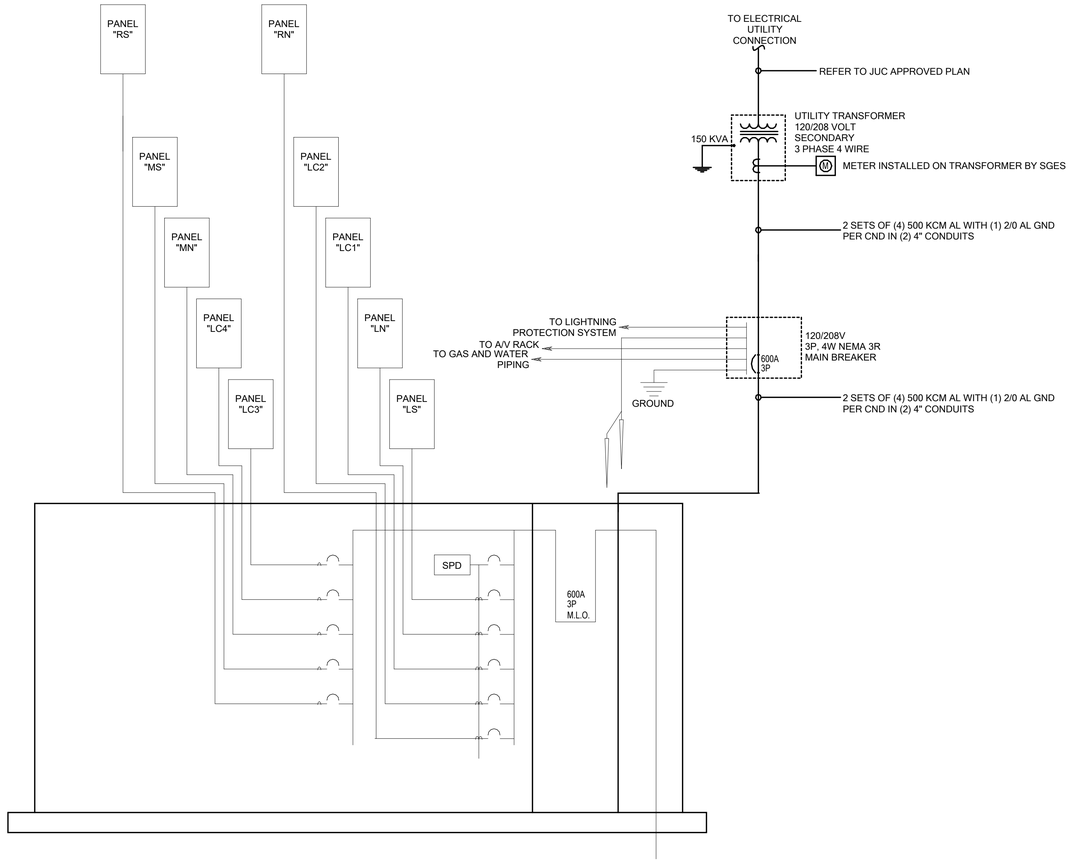

1 One-Line Diagram
SCALE: NO SCALE

bhd ARCHITECTS
www.bhdarchitects.com
Phone 801.571.0010
Fax 801.571.0303
Toll Free 888.571.0010
65 East Wadsworth Park Drive
Suite 205 Draper, Utah 84020

LICENSED PROFESSIONAL ENGINEER
No. 5148728
DAVID G. HINCKLEY
5/29/25
STATE OF UTAH

SPECTRUM ENGINEERS
324 S. State St., Suite 400
Salt Lake City, UT 84111
800-678-7077
801-328-5151
fax: 801-328-5155
www.spectrum-engineers.com

THE CHURCH OF JESUS CHRIST OF LATTER-DAY SAINTS

Nibley 6 &
Nibley UT West Stake

Approx. 3410 South 1200 West, Nibley, Utah
41.6726829, -111.8607175

Date: 29 May 2025
BHD #: 2403
County Parcel: 03.050.0016
Plan Series: Heritage 24
Owner #: 514-4728

Drawing Issue and Revision Schedule

#	Date	Description
1	29 May 2025	Bid Documents

One-Line Diagram

E605

Autodesk Docs://250274 - Nibley 6 Meetinghouse/250274-Elec Central.rvt
5/29/2025 9:59:26 AM

Chapel

BILL OF MATERIALS

LMRC_213 (1), Three Relay Room Controller
LMRC_212 (1), Two Relay Room Controller
LMPC_100-5 (4), Digital PIR Ceiling Mount Occupancy Sensor (extended height)
LMSW_101 (3), 1-Button Digital Wall Switch
LMSW_104 (1), 4-Button Digital Wall Switch

SEQUENCE OF OPERATION

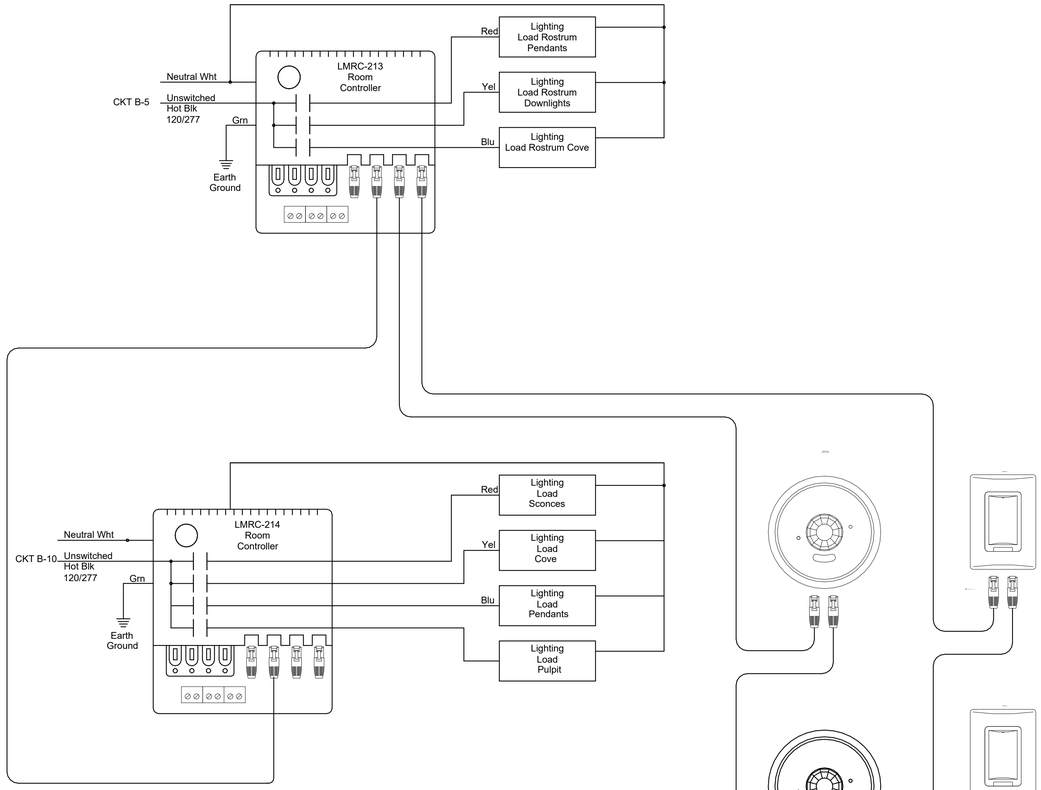

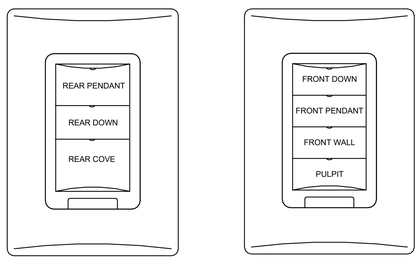

SWITCH LABELS

Overflow\Cultural

BILL OF MATERIALS

LMRC_212 (1), Two Relay Room Controller with 0-10v Dimming
LMRC_101 (1), Single Relay Room Controller
LMDM_101 (4), Digital Dimming Wall Switch
LMPC_100 (4), Digital PIR Ceiling Mount Occupancy Sensor
LMIO_102 (1), Digital Partition Interface

SEQUENCE OF OPERATION

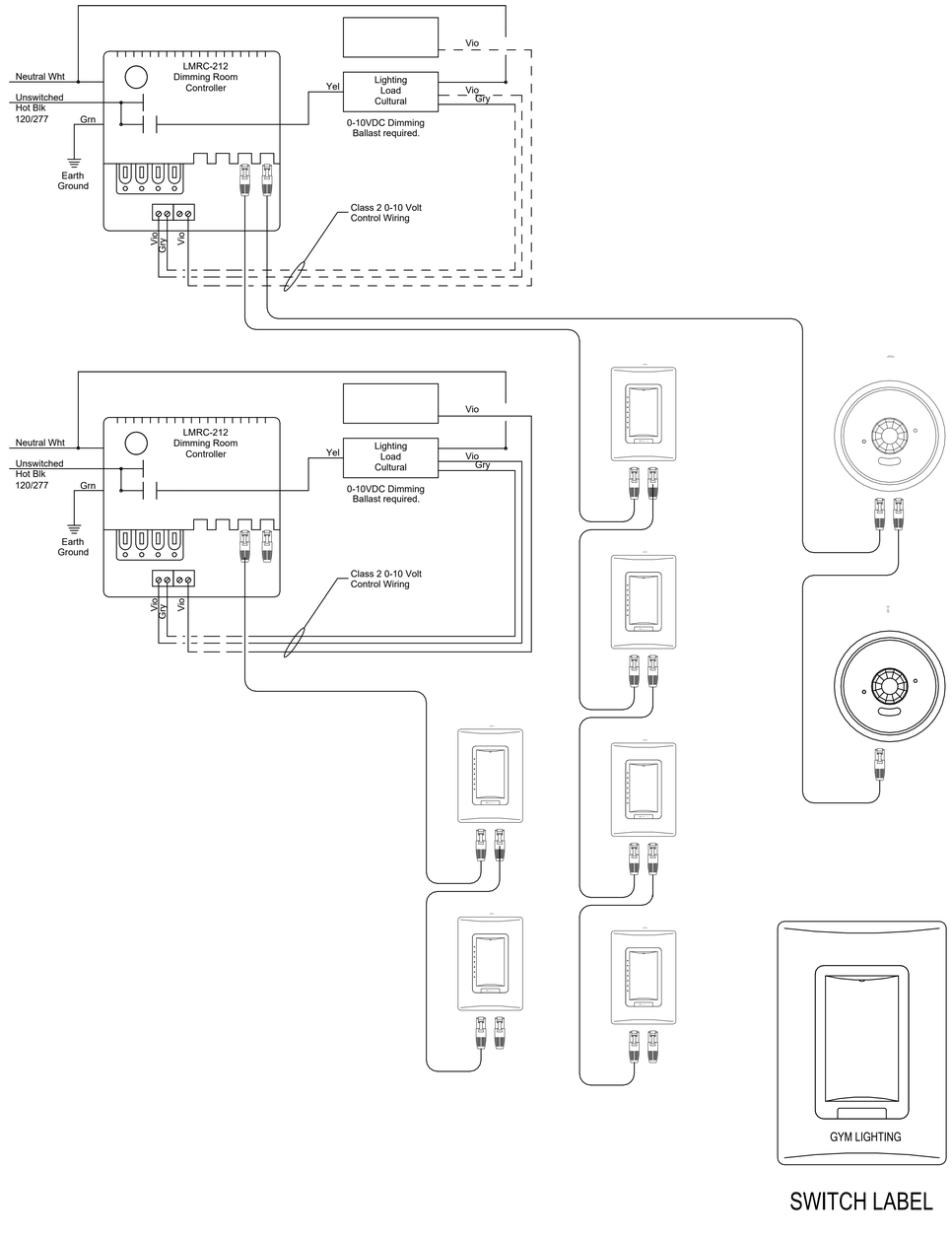

SWITCH LABEL

2 Chapel Lighting Control Wiring Diagram
NO SCALE

1 Cultural Center Lighting Control Wiring Diagram
NO SCALE

bhd ARCHITECTS
www.bhdarchitects.com
Phone 801.571.0010
Fax 801.571.0303
Toll Free 888.571.0010
65 East Wadsworth Park Drive
Suite 205 Draper, Utah 84020

LICENSED PROFESSIONAL ENGINEER
No. 5148728
DAVID G. HINCKLEY
5/29/25
STATE OF UTAH

SPECTRUM ENGINEERS
324 S. State St., Suite 400
Salt Lake City, UT 84111
800-678-7077
801-328-5151
fax: 801-328-5155
www.spectrum-engineers.com

THE CHURCH OF JESUS CHRIST OF LATTER-DAY SAINTS

Nibley 6 &
Nibley UT West Stake

Approx. 3410 South 1200 West, Nibley, Utah
41.672089, -111.860775

Date: 29 May 2025
BHD #: 2403
County Parcel: 03.050.0016
Plan Series: Heritage 24
Owner #: 514-4728

Drawing Issue and Revision Schedule

#	Date	Description
1	29 May 2025	Bid Documents

Lighting Control Wiring Diagrams

E606

Autodesk Docs://250274 - Nibley 6 Meetinghouse/250274-Elec Central.rvt
5/29/2025 9:59:26 AM

Wall Switch Typical

BILL OF MATERIALS

PW_301 (1), Passive Infrared (PIR) Wall Switch Sensor

SEQUENCE OF OPERATION

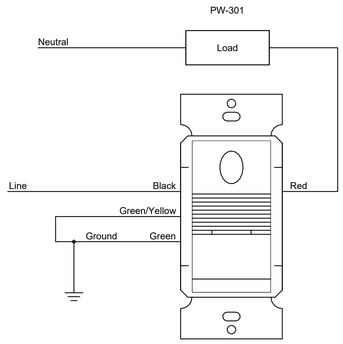

3 Typical Wall Switch Wiring Diagram

NO SCALE

Overflow\Cultural

BILL OF MATERIALS

LMRC_212 (1), Two Relay Room Controller with 0-10v Dimming
LMRC_101 (1), Single Relay Room Controller
LMDM_101 (4), Digital Dimming Wall Switch
LMPC_100 (4), Digital PIR Ceiling Mount Occupancy Sensor
LMIO_102 (1), Digital Partition Interface

SEQUENCE OF OPERATION

8-RELAY CAPACITY
LP8 RELAY PANEL

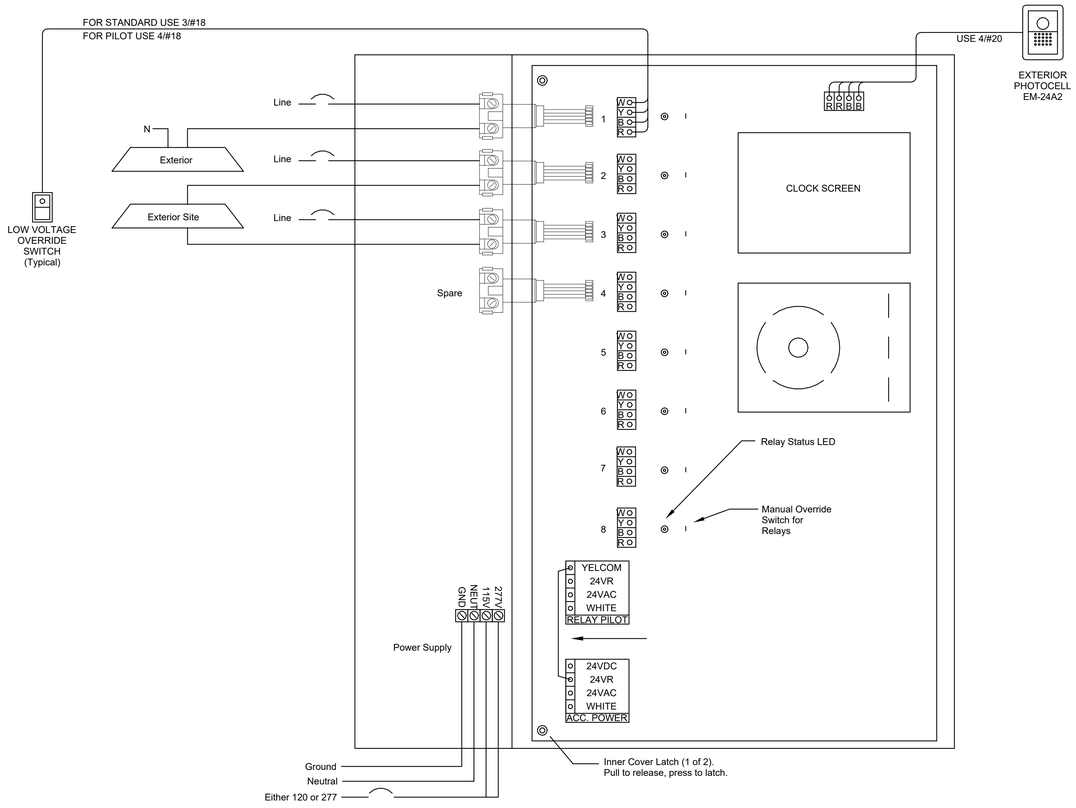

Hallways/Foyers

BILL OF MATERIALS

BZ-150 (1), 20A Power Pack
UT-300-3 (x), Ultrasonic (US) Ceiling Sensor (hallway application)
LVSW-101 (x), Single Button Low Voltage Switch

SEQUENCE OF OPERATION

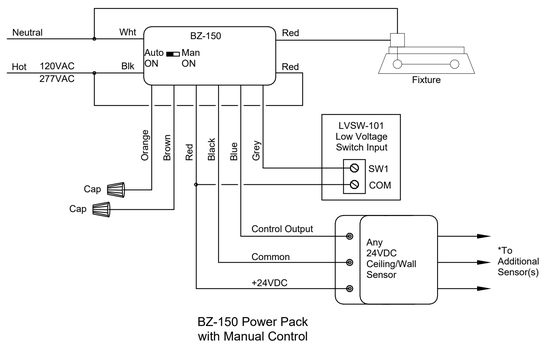

BZ-150 Power Pack
with Manual Control

2 Hallways/Foyers Lighting Control Wiring Diagram

NO SCALE

1 Peanut Panel Lighting Control Wiring Diagram

NO SCALE

bhd ARCHITECTS
www.bhdarchitects.com
Phone 801.571.0010
Fax 801.571.0303
Toll Free 888.571.0010
65 East Wadsworth Park Drive
Suite 205 Draper, Utah 84020

LICENSED PROFESSIONAL ENGINEER
No. 5148728
DAVID G. HINCKLEY
5/29/25
STATE OF UTAH

SPECTRUM ENGINEERS
324 S. State St., Suite 400
Salt Lake City, UT 84111
800-678-7077
801-328-5151
fax: 801-328-5155
www.spectrum-engineers.com

THE CHURCH OF JESUS CHRIST OF LATTER-DAY SAINTS

Nibley 6 &
Nibley UT West Stake

Approx. 3410 South 1200 West, Nibley, Utah
41.672987, -111.860775

Owner #: 514-4728
Plan Series: Heritage 24
BHD #: 2403
County Parcel: 03:050:0016
Date: 29 May 2025

Drawing Issue and Revision Schedule

#	Date	Description
1	29 May 2025	Bid Documents

Lighting Control Wiring Diagrams

E607

Autodesk Docs://250274 - Nibley 6 Meetinghouse/250274-Elec Central.rvt
5/29/2025 9:59:27 AM

GENERAL SHEET NOTES

1 SEE SHEET FA601 FOR FIRE ALARM DIAGRAMS AND SYMBOLS.

2 WIRING FROM DIFFERENT ANNUNCIATION AND INITIATING DEVICES LOOPS MY BE COMBINED IN A COMMON CONDUIT. FOLLOW NEC REQUIREMENTS FOR FILL.

3 COORDINATE FIRE ALARM DEVICES WITH LIGHTING FIXTURES, SPEAKERS, GRILLS, ETC.

4 DO NOT INSTALL SMOKE DETECTORS WITHIN 3' OF ANY MECHANICAL GRILL.

5 NON-POWER LIMITED AND POWER LIMITED WIRING SHALL BE SEPARATED IN FACP.

6 PERMANENTLY IDENTIFY LOCATION OF CIRCUIT BREAKER FEEDING FACP AND PROVIDE RED MARKING ON CIRCUIT BREAKER.

7 ALL FIRE ALARM CABLE THAT IS SUBJECT TO DAMAGE SHALL BE INSTALLED IN CONDUIT (ATTIC, EQUIPMENT PLATFORM, ABOVE SUSPENDED CEILINGS, ETC.

GENERAL SHEET NOTES

8 WHERE FIRE ALARM IS NOT RUN IN CONDUIT (SEE NOTE #4), CABLING SHALL BE RUN PERPENDICULAR AND PARALLEL TO SURFACES OF STRUCTURE MEMBERS, AND FOLLOW SURFACE CONTOURS WHERE POSSIBLE.

9 DO NOT CONNECT, MOUNT OR SUPPORT ANY FIRE ALARM CABLING FROM DATA/COMM MOUNTING OR WIRE MANAGEMENT.

SHEET KEYNOTES

1 PROVIDE PROTECTIVE WIRE GUARD ON DEVICES NOTED.

2 PROVIDE CONNECTION FOR FIRE SPRINKLER SYSTEM EXTERNAL BELL/HORN STROBE.

3 PROVIDE FLUSH MOUNT PULL STATION.

4 PROVIDE OUTPUT RELAY AND WIRING TO SHUNT TRIP KITCHEN OVEN/RANGE CIRCUIT BREAKER UPON ACTIVATION OF SMOKE DETECTOR. PROVIDE SUPERVISORY NOTIFICATION IF SMOKE IS ACTIVATED. HEAT DETECTOR TO PROVIDE ALARM.

1 First Floor Fire Alarm Plan
SCALE: 1/8" = 1'-0"

bhd ARCHITECTS
www.bhdarchitects.com
Phone 801.571.0010
Fax 801.571.0303
Toll Free 888.571.0010
65 East Wadsworth Park Drive
Suite 205 Draper, Utah 84020

LICENSED PROFESSIONAL ENGINEER
No. 5148728
DAVID G. HINCKLEY
5/29/25
STATE OF UTAH

SPECTRUM ENGINEERS
324 S. State St., Suite 400
Salt Lake City, UT 84111
800-678-7077
801-328-5151
fax: 801-328-5155
www.spectrum-engineers.com

THE CHURCH OF JESUS CHRIST OF LATTER-DAY SAINTS

Nibley 6 &
Nibley UT West Stake

Approx. 3410 South 1200 West, Nibley, Utah
41.670689, -111.850772

Owner #: 514-4728
Plan Series: Heritage 24
County Parcel: 03:050:0016
BHD #: 2403
Date: 29 May 2025

Drawing Issue and Revision Schedule

#	Date	Description
1	29 May 2025	Bid Documents

First Floor Fire Alarm Plan

FA101

Autodesk Docs://250274 - Nibley 6 Meetinghouse/250274-Elec Central.rvt
5/29/2025 9:59:29 AM

GENERAL SHEET NOTES

1 SEE SHEET FA601 FOR FIRE ALARM DIAGRAMS AND SYMBOLS.

2 WIRING FROM DIFFERENT ANNUNCIATION AND INITIATING DEVICES LOOPS MY BE COMBINED IN A COMMON CONDUIT. FOLLOW NEC REQUIREMENTS FOR FILL.

3 COORDINATE FIRE ALARM DEVICES WITH LIGHTING FIXTURES, SPEAKERS, GRILLS, ETC.

4 DO NOT INSTALL SMOKE DETECTORS WITHIN 3' OF ANY MECHANICAL GRILL.

5 NON-POWER LIMITED AND POWER LIMITED WIRING SHALL BE SEPARATED IN FACP.

6 PERMANENTLY IDENTIFY LOCATION OF CIRCUIT BREAKER FEEDING FACP AND PROVIDE RED MARKING ON CIRCUIT BREAKER.

7 ALL FIRE ALARM CABLE THAT IS SUBJECT TO DAMAGE SHALL BE INSTALLED IN CONDUIT (ATTIC, EQUIPMENT PLATFORM, ABOVE SUSPENDED CEILINGS, ETC.

GENERAL SHEET NOTES

8 WHERE FIRE ALARM IS NOT RUN IN CONDUIT (SEE NOTE #4), CABLING SHALL BE RUN PERPENDICULAR AND PARALLEL TO SURFACES OF STRUCTURE MEMBERS, AND FOLLOW SURFACE CONTOURS WHERE POSSIBLE.

9 DO NOT CONNECT, MOUNT OR SUPPORT ANY FIRE ALARM CABLING FROM DATA/COMM MOUNTING OR WIRE MANAGEMENT.

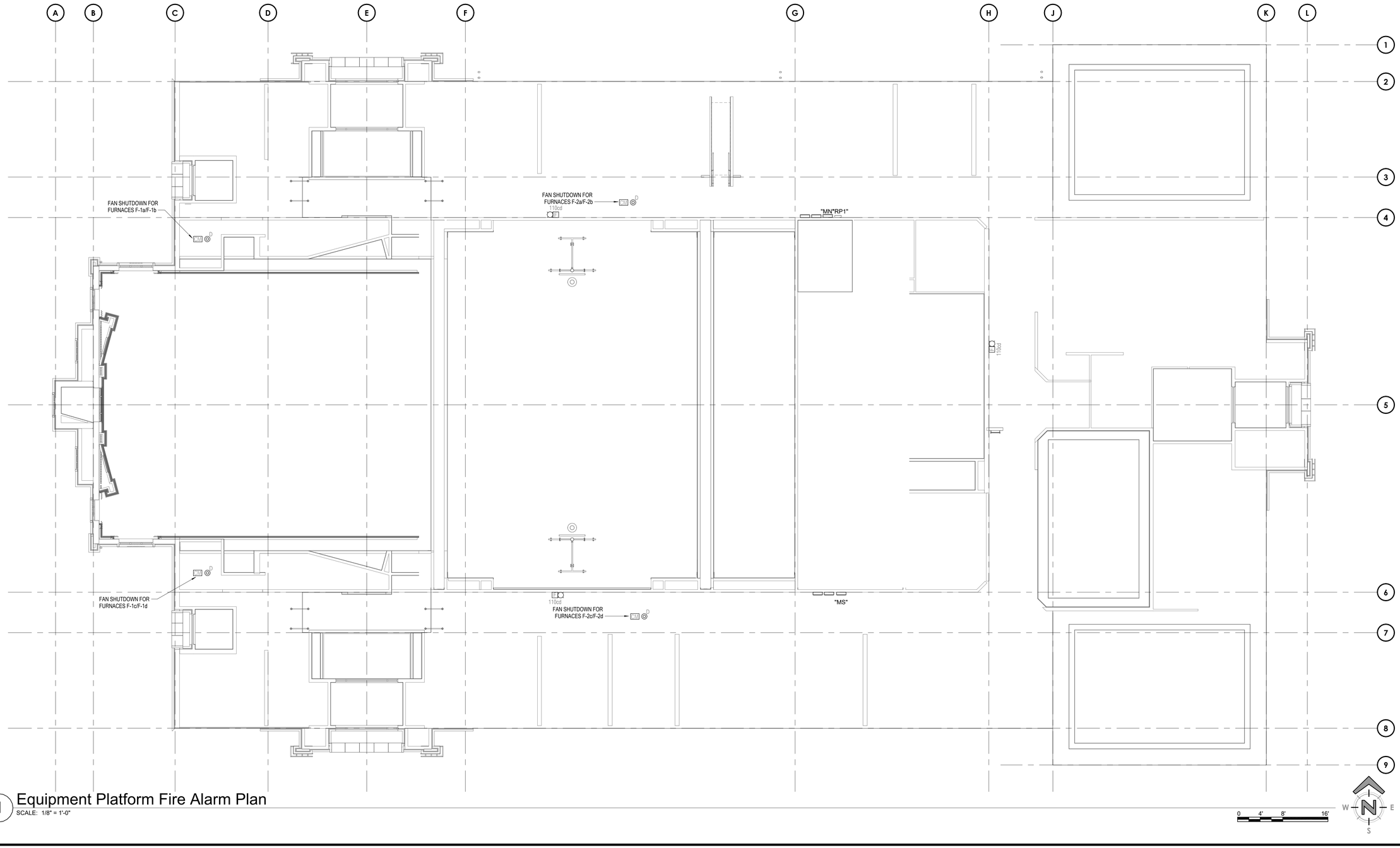

1 Equipment Platform Fire Alarm Plan
SCALE: 1/8" = 1'-0"

bhd ARCHITECTS
www.bhdarchitects.com
Phone 801.571.0010
Fax 801.571.0303
Toll Free 888.571.0010
65 East Wadsworth Park Drive
Suite 205 Draper, Utah 84020

LICENSED PROFESSIONAL ENGINEER
No. 5148728
DAVID G. HINCKLEY
5/29/25
STATE OF UTAH

SPECTRUM ENGINEERS
324 S. State St., Suite 400
Salt Lake City, UT 84111
800-678-7077
801-328-5151
fax: 801-328-5155
www.spectrum-engineers.com

THE CHURCH OF JESUS CHRIST OF LATTER-DAY SAINTS

Nibley 6 & Nibley UT West Stake

Approx. 3410 South 1200 West, Nibley, Utah
41.670809, -111.860775

Date:	BHD #:	County Parcel:	Plan Series:	Owner #:
29 May 2025	2403	03:050:0016	Heritage 24	514-4728

Drawing Issue and Revision Schedule

#	Date	Description
1	29 May 2025	Bid Documents

Equipment Platform Fire Alarm Plan

FA102

Autodesk Docs://250274 - Nibley 6 Meetinghouse/250274-Elec Central.rvt
5/29/2025 10:02:26 AM

FIRE DETECTION SYMBOLS

FACP	FIRE ALARM CONTROL PANEL
F	MANUAL STATION
CO	CARBON MONOXIDE DETECTOR
D	DUCT SMOKE DETECTOR (BY DIV 23). (COORDINATE CONNECTIONS WITH THE MECHANICAL CONTRACTOR)
H	HEAT DETECTOR
S	SMOKE DETECTOR
F	SPEAKER/STROBE WITH 15cd STROBE (HIGHER OUTPUT STROBES AS NOTED ON DRAWINGS)
	AUDIBLE VOICE ALARM ANNUNCIATION: ALARM SIGNAL SHALL BE ANNUNCIATED BY AUDIBLE VOICE EVACUATION MESSAGE. MESSAGE SHALL BE DIGITALLY RECORDED WITH MESSAGE CONTENT MEETING REQUIREMENTS OF THE NFPA AND LOCAL AUTHORITY. MESSAGE SHALL BE FIELD PROGRAMMABLE AND RETAINED IN MEMORY IF POWER IS INTERRUPTED.
	SPEAKER ONLY
	WEATHERPROOF HORN/STROBE WITH 15cd STROBE (HIGHER OUTPUT STROBES AS NOTED ON DRAWINGS)
	15cd STROBE ONLY
EOL	END OF LINE WIRING DEVICE
FS	WATER FLOW SWITCH
TS	VALVE TAMPER SWITCH
LT	LOW TEMPERATURE SENSOR
WP	DEVICE DESIGNED FOR OUTDOOR USE

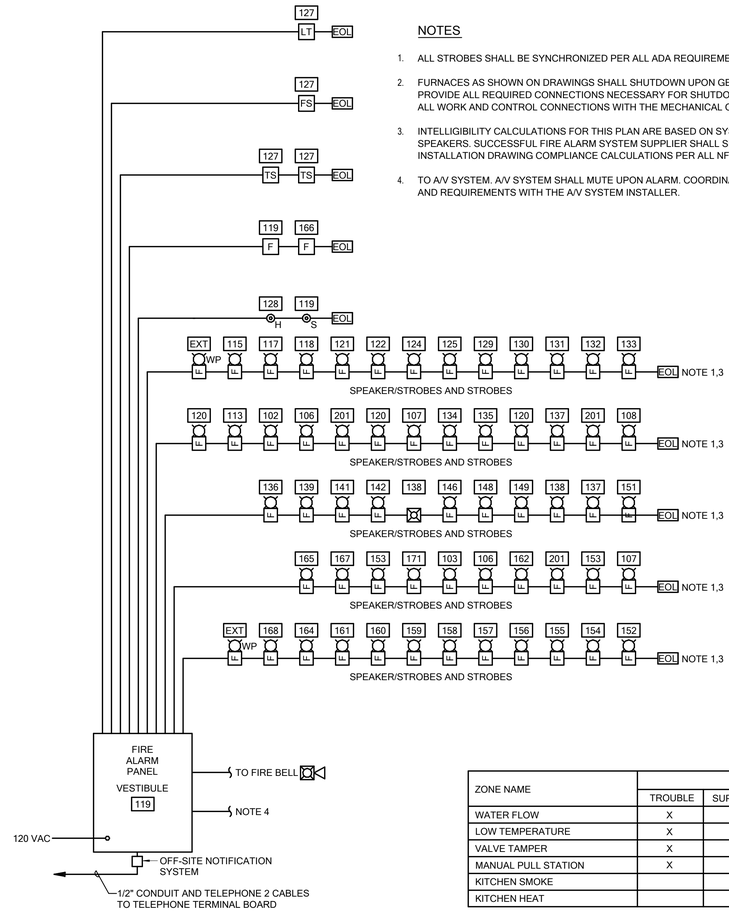

NOTES

1. ALL STROBES SHALL BE SYNCHRONIZED PER ALL ADA REQUIREMENTS.
2. FURNACES AS SHOWN ON DRAWINGS SHALL SHUTDOWN UPON GENERAL ALARM. PROVIDE ALL REQUIRED CONNECTIONS NECESSARY FOR SHUTDOWN. COORDINATE ALL WORK AND CONTROL CONNECTIONS WITH THE MECHANICAL CONTRACTOR.
3. INTELLIGIBILITY CALCULATIONS FOR THIS PLAN ARE BASED ON SYSTEM SENSOR #SPV SPEAKERS. SUCCESSFUL FIRE ALARM SYSTEM SUPPLIER SHALL SHOW ON INSTALLATION DRAWING COMPLIANCE CALCULATIONS PER ALL NFPA REQUIREMENTS.
4. TO A/V SYSTEM. A/V SYSTEM SHALL MUTE UPON ALARM. COORDINATE ALL WORK AND REQUIREMENTS WITH THE A/V SYSTEM INSTALLER.

ZONE NAME	ALARM TYPE			
	TROUBLE	SUPERVISED	ALARM	SHUNT TRIP
WATER FLOW	X		X	
LOW TEMPERATURE	X	X		
VALVE TAMPER	X	X		
MANUAL PULL STATION	X		X	
KITCHEN SMOKE		X		X
KITCHEN HEAT			X	

1 Fire Alarm Diagram
SCALE: NO SCALE

bhd ARCHITECTS
www.bhdarchitects.com
Phone 801.571.0010
Fax 801.571.0303
Toll Free 888.571.0010
65 East Wadsworth Park Drive
Suite 205 Draper, Utah 84020

LICENSED PROFESSIONAL ENGINEER No. 5148728 DAVID G. HINCKLEY 5/29/25 STATE OF UTAH

SPECTRUM ENGINEERS
324 S. State St., Suite 400
Salt Lake City, UT 84111
800-678-7077
801-328-5151
fax: 801-328-5155
www.spectrum-engineers.com

THE CHURCH OF JESUS CHRIST OF LATTER-DAY SAINTS

Nibley 6 & Nibley UT West Stake

Approx. 3410 South 1200 West, Nibley, Utah
41.670809, -111.860775

Date: 29 May 2025 **BHD #:** 2403 **County Parcel:** 03:050:0016 **Plan Series:** Heritage 24 **Owner #:** 514-4728

Drawing Issue and Revision Schedule

#	Date	Description
1	29 May 2025	Bid Documents

Fire Alarm Diagram

FA601

Autodesk Docs://250274 - Nibley 6 Meetinghouse/250274-Elec Central.rvt
5/29/2025 9:59:31 AM

SHEET KEYNOTES

1 MOUNT JUNCTION BOXES HORIZONTALLY AND CENTERED IN HARDWOOD BASE ON FRONT OF ROSTRUM.

2 PROVIDE (2) 3-GANG BOXES, MOUNTED IN THE MILLWORK ON THE SIDE OF THE PULPIT. SEE DETAIL 8/TA501 FOR MOUNTING OF 'CP1', 'CP2' AND OTHER DEVICES IN PULPIT SIDE.

3 SEE ARCHITECTURAL ROSTRUM MILLWORK DETAILS FOR ROUGH-IN AND MOUNTING OF PULPIT MICROPHONE.

4 INSTALL JUNCTION BOX ON VERTICAL FACE OF RISER.

5 LOOP EXTRA CABLES THROUGH JUNCTION BOXES. DO NOT CUT.

6 ORGAN INPUT. LEAVE 5'-0" PIGTAIL IN ORGAN CABLE RECESS ON ROSTRUM. COIL 10'-0" OF CABLE IN RACK AND LABEL.

7 SEE SHEET TT602 FOR CABLE TO 'CP', 'CC', 'BT' AND 'CP1'. INSTALL CONDUITS PER GENERAL NOTE #1, SHEET ET101.

8 TO PULPIT MOTOR CONTROL.

9 PROVIDE 6 EACH, 2" AND 1 EACH, 1.5" CONDUITS STUBBED TO BOTTOM SECTION OF ORGAN CHAMBER.

10 MOUNT NEXT TO POWER OUTLET.

11 MOUNT 'HDMI' AND DATA OUTLET IN FLOOR BOX. PROVIDE 1.25" CONDUIT FROM FLOOR BOX TO RECESSED J-BOX BEHIND 'MON'.

12 INSTALL POWER, DATA JACK AND 'HBR2' (IF REQUIRED) IN LARGE J-BOX BEHIND 'MON'. SECURE AND NEATLY DRESS CABLES SO MOUNT MAY FULLY ARTICULATE WITHOUT DAMAGING CABLING.

13 1.25" CONDUIT.

14 PHONE CONNECTION TO FIRE ALARM PANEL.

15 FIRE ALARM SOUND SYSTEM MUTE CONNECTION.

16 PROVIDE GROUNDING COMPONENTS AS SHOWN ON DETAIL 2/ET602.

17 INSTALL 4 EACH, 2.5" CONDUITS TO MECHANICAL PLATFORM WALKWAY. CONDUIT STUBS TO BE 4" ABOVE PLATFORM FLOOR NEXT TO WALL.

18 INSTALL DATA JACK ADJACENT TO POWER OUTLET FOR PRINTER.

19 INSTALL FLOOR BOX TO BE UNDER COUNCIL TABLE. COORDINATE EXACT LOCATION WITH ARCHITECT.

20 ENSURE THE JUNCTION BOX FOR AUDIO CONNECTION IS NOT BEHIND DISPLAY BOARD.

21 PROVIDE 2 EACH, 1.25" CONDUITS WITH PULL STRING FROM ORGAN LOCATION TO ORGAN CHAMBER FOR ORGAN SPEAKER CABLES. CABLES TO BE INSTALLED BY ORGAN SUPPLIER.

GENERAL SHEET NOTES

1. EACH VOICE AND DATA OUTLET SHALL HAVE A MINIMUM 1" CONDUIT FROM OUTLET TO EQUIPMENT RACK #2 OR EQUIPMENT PLATFORM WALKWAY. INSTALLER IS TO BE FAMILIAR WITH, AND COMPLY WITH THE ANSI/TIA/EIA/569-C STANDARDS. CONDUIT SHALL HAVE A TOTAL DISTANCE OF NO MORE THAN 230'-0". IF TOTAL BENDS ARE MORE THAN 180 DEGREES, INCREASE CONDUIT SIZE ONE TRADE SIZE FOR EVERY ADDITIONAL 90 DEGREES. TYPICAL OF ALL LOCATIONS.
2. INSTALL EACH CABLE TYPE IN A SEPARATE CONDUIT.

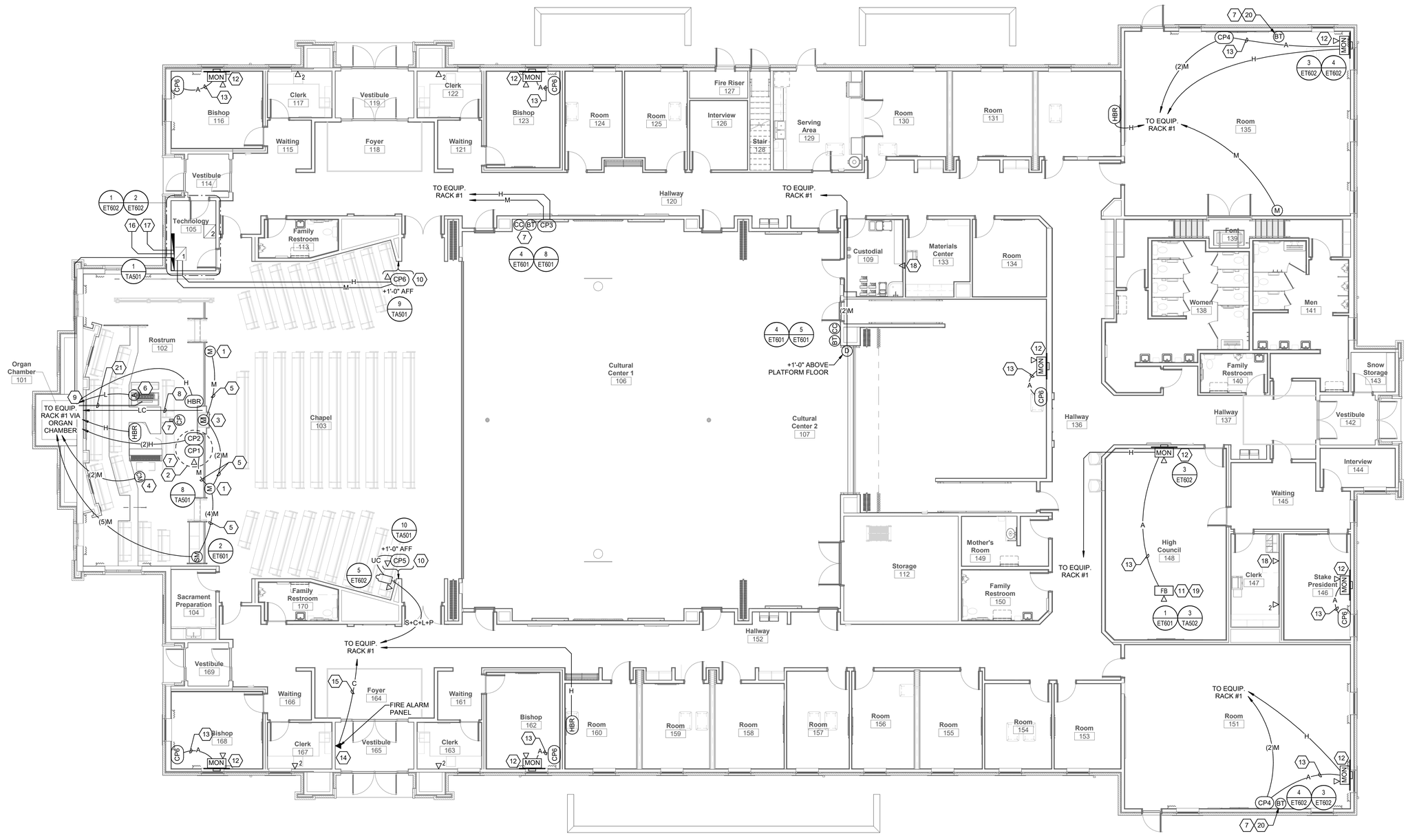

1 MAIN FLOOR AV FLOOR PLAN
SCALE: 1/8" = 1'-0"

bhd ARCHITECTS
www.bhdarchitects.com
Phone 801.571.0010
Fax 801.571.0303
Toll Free 888.571.0010
65 East Wadsworth Park Drive
Suite 205 Draper, Utah 84020

LICENSED PROFESSIONAL ENGINEER
No. 5148728
DAVID G. HINCKLEY
5/29/25
STATE OF UTAH

SPECTRUM ENGINEERS
324 S. State St., Suite 400
Salt Lake City, UT 84111
800-678-7077
801-328-5151
fax: 801-328-5155
www.spectrum-engineers.com

THE CHURCH OF JESUS CHRIST OF LATTER-DAY SAINTS

Nibley 6 & Nibley UT West Stake

Approx. 3410 South 1200 West, Nibley, Utah
41.670809, -111.860775

Owner #: 514-4728
Plan Series: Heritage 24
County Parcel: 03:050:0016
BHD #: 2403
Date: 29 May 2025

Drawing Issue and Revision Schedule

#	Date	Description

MAIN FLOOR AV FLOOR PLAN

ET101

Autodesk Docs://250274 - Nibley 6 Meetinghouse/250274-Tech Central.rvt
5/27/2025 11:24:05 AM

SHEET KEYNOTES

1 MOUNT DATA OUTLET FLUSH IN CEILING COORDINATE WITH DIVISION 27 1501 INSTALLER (TYPICAL).

2 MOUNT DATA OUTLET IN EQUIPMENT MEZZANINE ABOVE, NEXT TO MECHANICAL SYSTEM WEB INTERFACE. COORDINATE EXACT LOCATION WITH MECHANICAL INSTALLER.

3 MOUNT DATA OUTLET IN EQUIPMENT MEZZANINE ABOVE, NEXT TO LIGHTING CONTROLS. COORDINATE EXACT LOCATION WITH LIGHTING INSTALLER.

4 ENSURE THE JUNCTION BOX FOR AUDIO CONTROL IS NOT BEHIND DISPLAY BOARD.

GENERAL SHEET NOTES

1. MOUNT ALL LOUDSPEAKER BACKBOXES ON TILE BRIDGES IN SUSPENDED TILE CEILINGS. SECURE ALL BACKBOXES WITH SEISMIC RESTRAINT CABLE ACCORDING TO 4/ET601.

1 MAIN FLOOR AV CEILING PLAN
SCALE: 1/8" = 1'-0"

bhd ARCHITECTS
www.bhdarchitects.com
Phone 801.571.0010
Fax 801.571.0303
Toll Free 888.571.0010
65 East Wadsworth Park Drive
Suite 205 Draper, Utah 84020

LICENSED PROFESSIONAL ENGINEER
No. 5148728
DAVID G. HINCKLEY
5/29/25
STATE OF UTAH

SPECTRUM ENGINEERS
324 S. State St., Suite 400
Salt Lake City, UT 84111
800-678-7077
801-328-5151
fax: 801-328-5155
www.spectrum-engineers.com

THE CHURCH OF JESUS CHRIST OF LATTER-DAY SAINTS

Nibley 6 &
Nibley UT West Stake

Approx. 3410 South 1200 West, Nibley, Utah
41.670809, -111.840775

BHD #: 2403
County Parcel: 03:050:0016
Plan Series: Heritage 24
Owner #: 514-4728
Date: 29 May 2025

Drawing Issue and Revision Schedule

#	Date	Description

MAIN FLOOR AV CEILING PLAN

ET102

Autodesk Docs://250274 - Nibley 6 Meetinghouse/250274-Tech Central.rvt
5/27/2025 11:24:11 AM

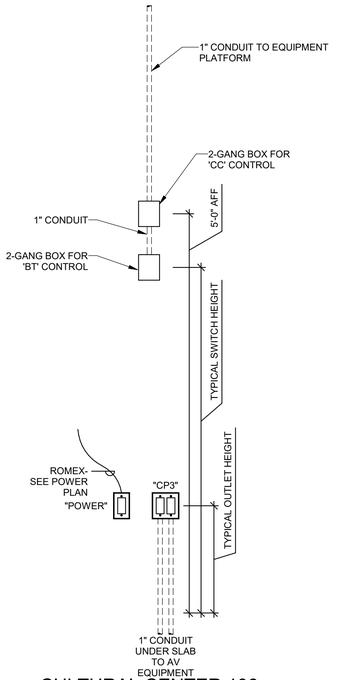

CULTURAL CENTER 106 AV DEVICE MOUNTING DETAIL

8 NO SCALE

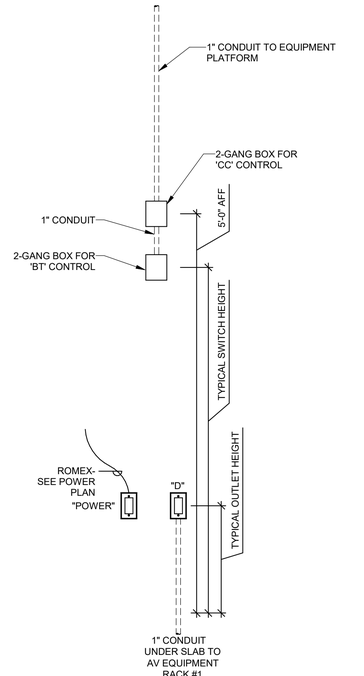

CULTURAL CENTER 107 AV DEVICE MOUNTING DETAIL

5 NO SCALE

ELECTRICAL SYSTEM EQUIPMENT LIST

SYM	DESCRIPTION	QTY	NOTES
(M)(D) (CP5)	2-1/8" DEEP, SINGLE GANG BOX W/ 5/8" PLASTER RING MOUNTED AT ELECTRICAL OUTLET HEIGHT, OR AS NOTED	OFP	
(CP1) (CP2)	2-1/8" DEEP, TRIPLE GANG BOX, MOUNTED ON PULPIT SIDE	OFP	SEE DETAIL 8/TA501 COORDINATE WITH MILLWORK DETAILS ON ARCHITECTURAL SHEETS
(CP3) (CP4) (CP6) (CP7)	3-1/4" DEEP, 4-11/16" SQUARE BOX W/ 5/8" DEEP DOUBLE GANG PLASTER RING MOUNTED AT ELECTRICAL OUTLET HEIGHT	OFP	SEE DETAILS 4/ET602, 3, 7, & 9/TA501 AND 6/TA502
(HBR)	3-1/4" DEEP, 4-11/16" SQUARE BOX W/ 5/8" DEEP SINGLE GANG PLASTER RING MOUNTED AT ELECTRICAL OUTLET HEIGHT, OR AS NOTED	OFP	
(V)	3-1/4" DEEP, 4-11/16" SQUARE BOX W/ 5/8" DEEP, SINGLE GANG PLASTER RING MOUNTED AT ELECTRICAL SWITCH HEIGHT	OFP	
WAP ▽	2-1/8" DEEP, SINGLE GANG BOX W/ 5/8" SINGLE GANG PLASTER RING, FLUSH MOUNTED IN CEILING	OFP	
▽ ▽2	2-1/8" DEEP, DOUBLE GANG BOX MOUNTED AT ELECTRICAL OUTLET HEIGHT W/ 5/8" SINGLE GANG PLASTER RING	OFP	
▼	2-1/8" DEEP, DOUBLE GANG BOX MOUNTED AT FIRE ALARM PANEL W/ 5/8" DEEP SINGLE GANG PLASTER RING, OR AS NOTED	OFP	COORDINATE EXACT LOCATION WITH FIRE ALARM INSTALLER
(BT) (SV) (SVM)	3-1/4" DEEP, 4-11/16" SQUARE BOX W/ 5/8" DEEP, DOUBLE GANG PLASTER RING MOUNTED AT ELECTRICAL SWITCH HEIGHT	OFP	SEE DETAILS 4 & 5/TA501 AND 5/TA502
(CC)	3-1/2" DEEP, 4-11/16" SQUARE BOX W/ 5/8" DEEP, SINGLE GANG PLASTER RING MOUNTED AT 5'-0" ABOVE FINISHED FLOOR	1	SEE DETAILS 4, 5 & 8/ET601
(SM)	2-1/8" DEEP, SINGLE GANG BOX SURFACE MOUNTED	1	SEE DETAIL 2/ET601 COORDINATE WITH MILLWORK DETAILS ON ARCHITECTURAL SHEETS
(CM)	2-1/8" DEEP, SINGLE GANG BOX MOUNTED IN VERTICAL FACE OF RISER	OFP	SEE DETAIL 6/TA501
(CP)	CONTROL PEDESTAL, STUB CONDUITS THROUGH FLOOR	1	COORDINATE WITH MILLWORK DETAILS ON ARCHITECTURAL SHEETS
(A)	2-1/8" DEEP, SINGLE GANG BOX MOUNTED IN RECESS FOR ORGAN CONSOLE	1	
	CAMERA JUNCTION BOX 3-1/4" DEEP, 4-11/16" SQUARE BOX W/ 5/8" DEEP, DOUBLE GANG PLASTER RING MOUNTED AT 90° AFF	OFP	SEE DETAIL 5/ET602
FB	FLOOR BOX, MIN. 4" STEEL, WITH ACCESSORIES REQUIRED TO INSTALL ON-GRADE ARCHITECT TO CHOOSE COLOR AND TYPE OF COVER	1	WIREMOLD RFB-9-OG FSR FL-500P-4-B / FL-ROO-X / FL-GRD4 SEE DETAILS 1/ET601 AND 3/TA502
MON	LARGE CAPACITY JUNCTION BOX, INCLUDING FLANGE KIT AND COVER, MOUNTED IN WALL AT 12" BELOW FINISHED CEILING	OFP	CHIEF PAC 525FCW, SEE DETAILS 3 & 4/ET602
/1	AV EQUIPMENT CABINET W/ 12"x12"x4" METAL JUNCTION BOX RECESSED IN WALL	OFP	AV EQUIPMENT CABINET FURNISHED AND INSTALLED BY AV INSTALLER, SEE DETAILS 6/ET601, 1 & 2/ET602, AND 1/TA501
/2	DATA EQUIPMENT RACK, SWING FRAME	OFP	FURNISHED AND INSTALLED BY DIVISION 27, SEE DETAILS 2/ET602 AND 4/TT602
(IR)	2-1/8" DEEP, DOUBLE GANG BOX MOUNTED IN DOOR HEADER	OFP	SEE DETAIL 3/ET601
$(S)_4$	SPEAKER MOUNTING RING	OFP	FURNISHED BY DIVISION 27, INSTALLED BY DIVISION 26 SEE DETAIL 7/ET601
$(S)_M$	SPEAKER ENCLOSURE	OFP	FURNISHED BY DIVISION 27, INSTALLED BY DIVISION 26 SEE DETAIL 7/ET601
$(S)_6$	SPEAKER MOUNTING RING	OFP	FURNISHED BY DIVISION 27, INSTALLED BY DIVISION 26 SEE DETAIL 7/ET601
	WALL FIELD, PRE-TREATED PAINTED 0.75" PLYWOOD	OFP	FURNISHED AND INSTALLED BY DIVISION 26. SEE DETAILS 1 & 2/ET602

MANUFACTURER'S NAMES AND TELEPHONE NUMBERS ARE LISTED IN THE SPECIFICATIONS
A/R = AS REQUIRED, OFP = OBTAIN FROM PLANS, OFE=OWNER FURNISHED EQUIPMENT

GENERAL PROJECT NOTES

1. NO CHANGES SHALL BE MADE WITHOUT THE PROJECT AV/STRUCTURED CABLING CONSULTANT'S WRITTEN CONSENT.
2. REFER TO DRAWINGS FOR EXACT NUMBER OF COMPONENTS USED IF NOT SPECIFIED IN EQUIPMENT LIST.
3. PROVIDE CONDUIT FOR ALL LOW VOLTAGE CABLES SHOWN ON ET SHEETS AS FOLLOWS:
   - 3.1. PROVIDE CONDUIT FOR H, C, D, A, AND S CABLES FROM DEVICE TO MECHANICAL EQUIPMENT PLATFORM ABOVE TECHNOLOGY ROOM 105. CABLES MAY THEN RUN EXPOSED AND STUB DOWN TO LADDER RACK. PROTECT EXPOSED CABLING ACCORDING TO DIVISION 27. ALLOW NO OTHER CABLE TO ATTACH TO TECHNOLOGY CABLES.
   - 3.2. PROVIDE CONDUIT FOR ALL ROSTRUM DEVICES TO ORGAN CHAMBER AND UNDER SLAB CONDUIT FROM ORGAN CHAMBER TO EQUIPMENT RACKS.
   - 3.3. PROVIDE CONDUIT UNDER SLAB FOR ALL "M", AND "L" CABLES FROM DEVICE TO TECHNOLOGY ROOM EQUIPMENT RACK.
   - 3.4. ALL CABLING IN WALLS SHALL BE IN CONDUIT.
   - 3.5. SIZE CONDUIT AS NOTED OR ACCORDING TO CODE WHICHEVER IS GREATER, WITH 0.75" MINIMUM.
   - 3.6. INSTALL DIFFERENT CABLE TYPES IN SEPARATE CONDUITS UNLESS NOTED OTHERWISE. SEPARATE CABLE TYPES OUTSIDE OF CONDUIT BY 12" MINIMUM
   - 3.7. ALL CONDUITS WITH OR WITHOUT CABLES SHALL HAVE A PULL STRING.
   - 3.8. LABEL ALL CONDUITS WITH DESTINATION.
   - 3.9. DEBUR ALL CONDUIT STUBS AND FIT WITH PLASTIC BUSHING.
   - 3.10. RACEWAY SHALL BE FURNISHED AND INSTALLED BY DIVISION 26. CABLING IS FURNISHED AND INSTALLED BY DIVISION 27. RACEWAY, CABLING, AND TERMINATIONS SHALL BE ACCORDING TO 27 1501.
4. DIVISION 26 INSTALLER IS TO PROVIDE ALL ROUGH-IN INDICATED FOR DIVISION 27 INSTALLER. ALL ROUGH-IN SHALL COMPLY WITH ANSI/TIA/EIA 569-B STANDARDS. THIS INCLUDES, BUT IS NOT LIMITED TO, THE LIMITATION OF (2) 90° BEND FOR CONDUIT. IT IS THE DIVISION 26 INSTALLERS RESPONSIBILITY TO ENSURE COMPLIANCE WITH STANDARD.
5. REFER TO A400 SERIES SHEETS FOR ADDITIONAL INFORMATION ON ROUGH-IN. SEE "A" SHEETS FOR MOUNTING DETAILS IN MILLWORK.
6. SPEAKER TRIM RINGS ARE FURNISHED BY DIVISION 27 AND INSTALLED BY DIVISION 26.
7. "ET" SHEETS SHOW WORK AND MATERIALS BY DIVISION 26 AND DIVISION 27. SEE SPECIFICATIONS AND DRAWING NOTES FOR RESPONSIBILITY FOR EACH ITEM.
8. PROVIDE GROUNDING AS SHOWN ON DRAWINGS AND IN COMPLIANCE WITH CODE AND ANSI/TIA/EIA 569-B
9. DIVISION 26 SHALL FURNISH AND INSTALL SEISMIC RESTRAINT CABLE TO ALL SPEAKER BACKBOXES. DIVISION 27 SHALL ATTACH SEISMIC RESTRAINT CABLE TO SPEAKERS.

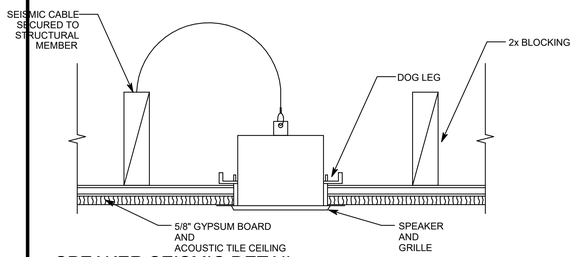

SPEAKER SEISMIC DETAIL

7 NO SCALE

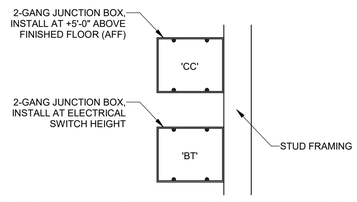

CULTURAL CENTER CONTROLS JUNCTION BOX DETAIL

4 NO SCALE (BT) (CC)

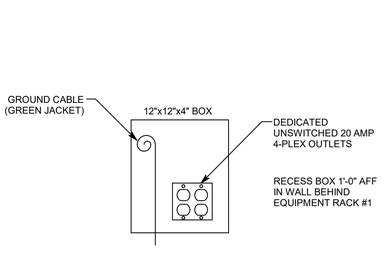

AV POWER JUNCTION BOX

6 NO SCALE /1

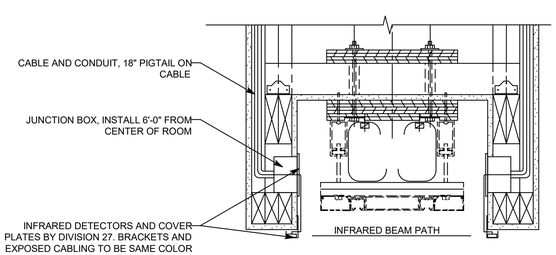

HEADER DETAIL (IN CULTURAL CENTER)

3 NO SCALE (IR)

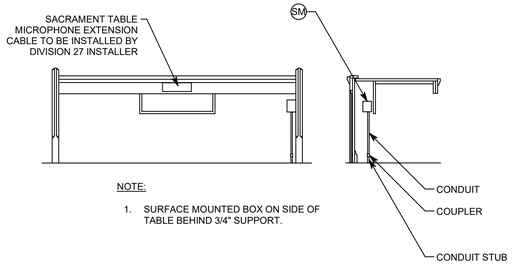

SACRAMENT TABLE MICROPHONE DETAIL

2 NO SCALE (SM)

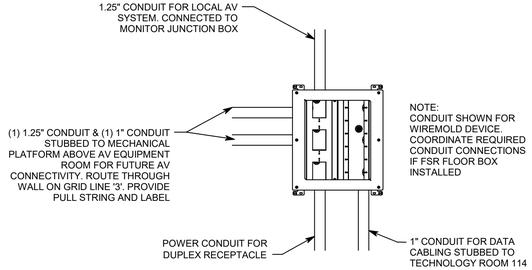

STAKE COUNCIL 147 FLOOR BOX DETAIL

1 NO SCALE FB

bhd ARCHITECTS
www.bhdarchitects.com
Phone 801.571.0010
Fax 801.571.0303
Toll Free 888.571.0010
65 East Wadsworth Park Drive
Suite 205 Draper, Utah 84020

LICENSED PROFESSIONAL ENGINEER
No. 5148728
DAVID G. HINCKLEY
5/29/25
STATE OF UTAH

SPECTRUM ENGINEERS
324 S. State St., Suite 400
Salt Lake City, UT 84111
800-678-7077
801-328-5151
fax: 801-328-5155
www.spectrum-engineers.com

THE CHURCH OF JESUS CHRIST OF LATTER-DAY SAINTS

Nibley 6 & Nibley UT West Stake

Approx. 3410 South 1200 West, Nibley, Utah
41.670809, -111.866775

Owner #: 514-4728
Plan Series: Heritage 24
County Parcel: 03:050:0016
BHD #: 2403
Date: 29 May 2025

Drawing Issue and Revision Schedule

#	Date	Description

AV ROUGH-IN SCHEDULES, NOTES, DETAILS, AND DIAGRAM

ET601

Autodesk Docs://250274 - Nibley 6 Meetinghouse/250274-Tech Central.rvt
5/27/2025 11:24:14 AM

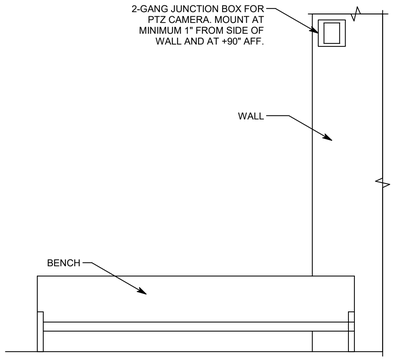

5 CAMERA ENCLOSURE DETAIL
NO SCALE

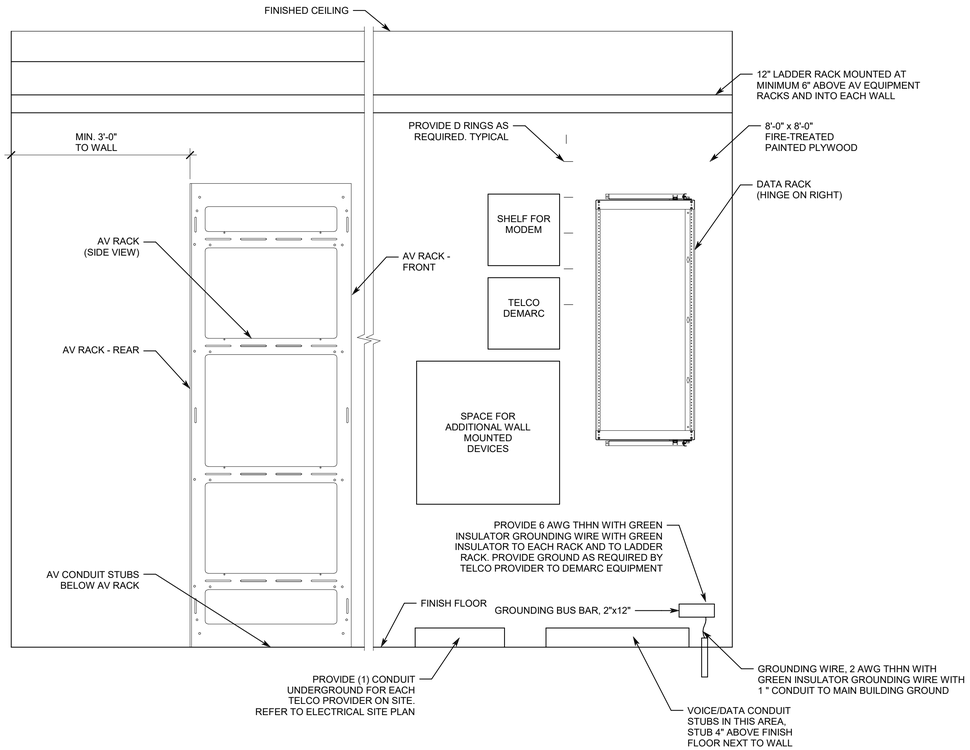

2 TECH 105 WALL ELEVATION
NO SCALE

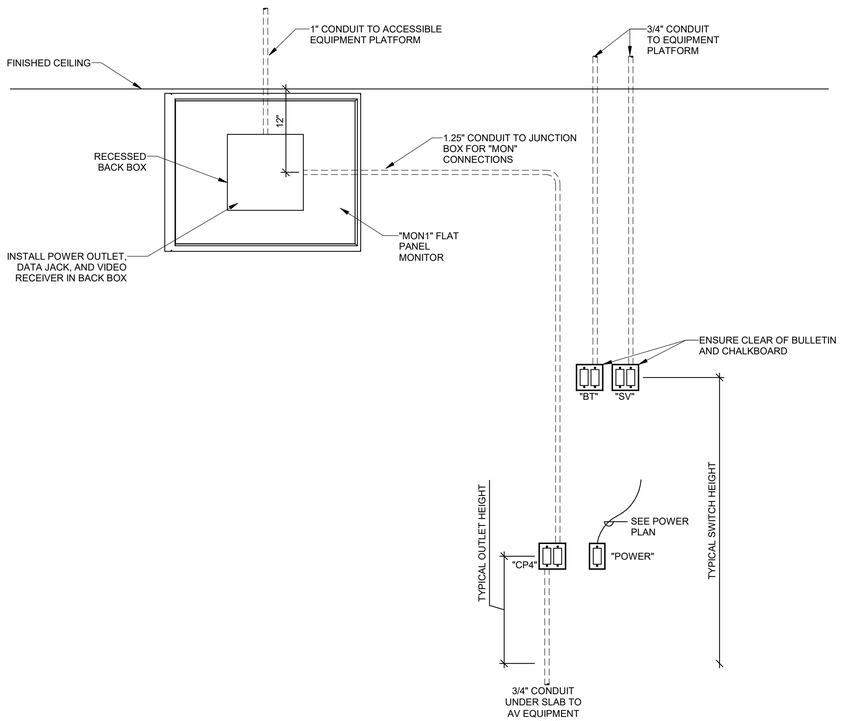

4 ROOMS 135 & 149 WALL ELEVATION DETAIL
NO SCALE

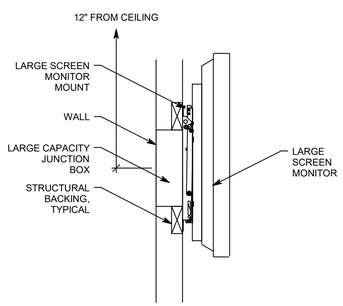

3 WALL MOUNTED FLAT PANEL DETAIL
NO SCALE

MON

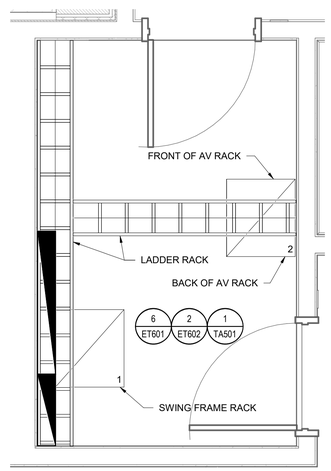

1 TECH ROOM 105 DETAIL
NO SCALE

bhd ARCHITECTS
www.bhdarchitects.com
Phone 801.571.0010
Fax 801.571.0303
Toll Free 888.571.0010
65 East Wadsworth Park Drive
Suite 205 Draper, Utah 84020

LICENSED PROFESSIONAL ENGINEER
No. 5148728
DAVID G. HINCKLEY
5/29/25
STATE OF UTAH

SPECTRUM ENGINEERS
324 S. State St., Suite 400
Salt Lake City, UT 84111
800-678-7077
801-328-5151
fax: 801-328-5155
www.spectrum-engineers.com

THE CHURCH OF JESUS CHRIST OF LATTER-DAY SAINTS

Nibley 6 & Nibley UT West Stake

Approx. 3410 South 1200 West, Nibley, Utah
41.670809, -111.860775

Owner #:	514-4728
Plan Series:	Heritage 24
County Parcel:	03030:0016
BHD #:	2403
Date:	29 May 2025

Drawing Issue and Revision Schedule

#	Date	Description

AV ROUGH-IN DETAILS

ET602

Autodesk Docs://250274 - Nibley 6 Meetinghouse/250274-Tech Central.rvt
5/27/2025 11:24:16 AM

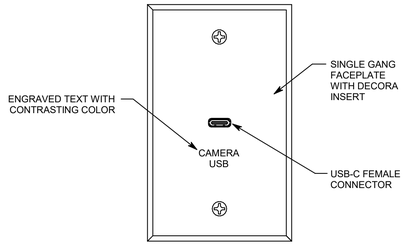

10 CAMERA USB-C CONNECTION PANEL DETAIL 'CP5'

NO SCALE

CP5

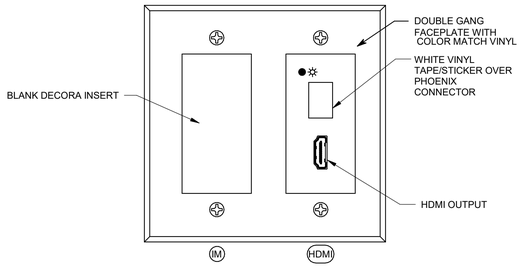

9 CONNECTION PANEL #6

NO SCALE

CP6

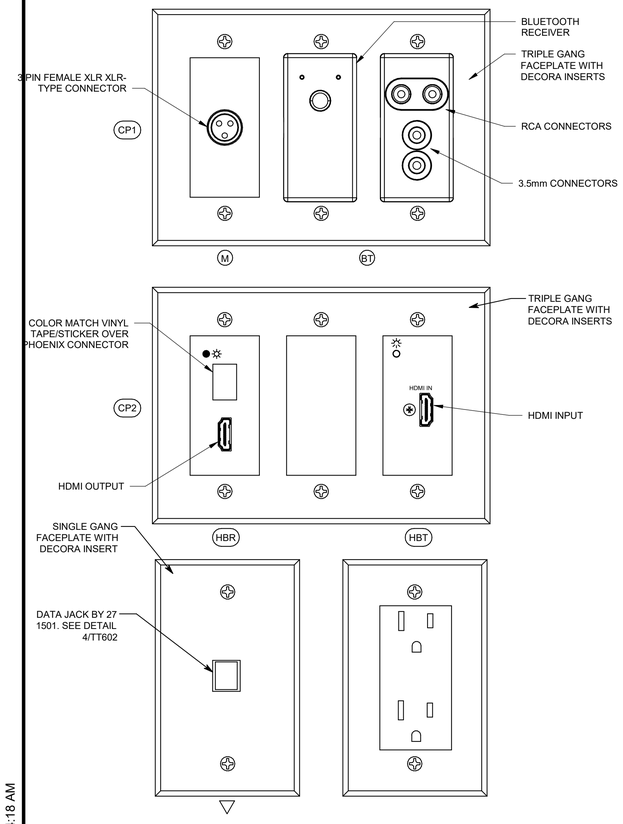

8 PULPIT CONNECTION DETAILS

NO SCALE

CP1 CP2

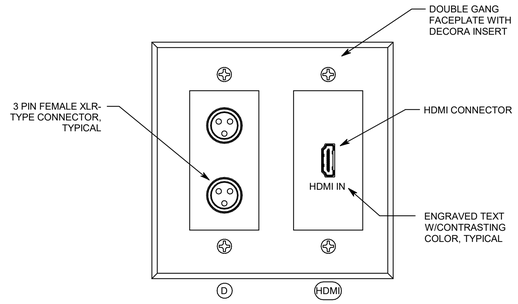

7 CONNECTION PANEL #4

NO SCALE

CP4

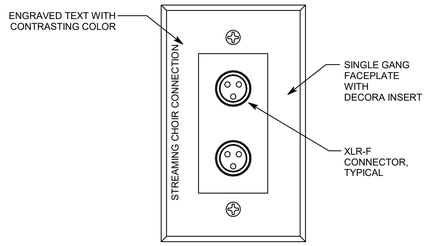

6 CHOIR MIC CONNECTION PANEL DETAIL 'CM'

NO SCALE

CM

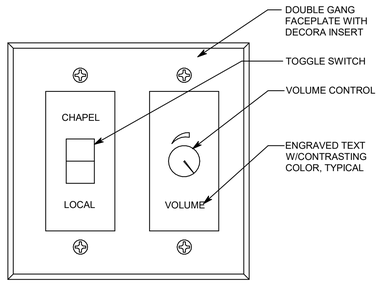

5 VOLUME CONTROL 'SV'

NO SCALE

SV

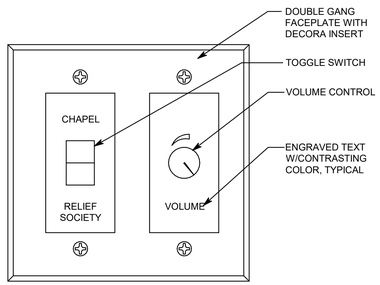

4 MOTHERS ROOM CONTROLLER

NO SCALE

SVM

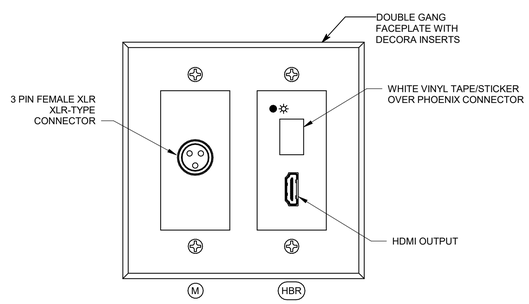

3 CULTURAL CENTER AV CONNECTION PANEL #3

NO SCALE

CP3

2 HELP DESK PANEL

NO SCALE

HDP

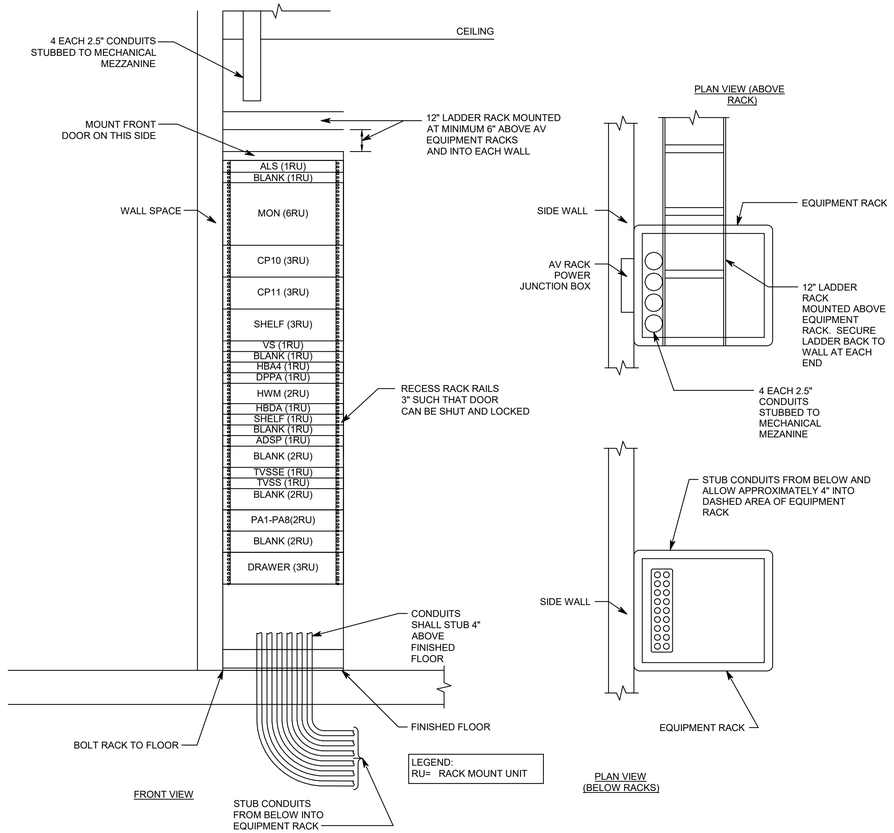

1 EQUIPMENT RACK ELEVATION AND DETAILS

NO SCALE

bhd ARCHITECTS
www.bhdarchitects.com
Phone 801.571.0010
Fax 801.571.0303
Toll Free 888.571.0010
65 East Wadsworth Park Drive
Suite 205 Draper, Utah 84020

LICENSED PROFESSIONAL ENGINEER
No. 5148728
DAVID G. HINCKLEY
5/29/25
STATE OF UTAH

SPECTRUM ENGINEERS
324 S. State St., Suite 400
Salt Lake City, UT 84111
800-678-7077
801-328-5151
fax: 801-328-5155
www.spectrum-engineers.com

THE CHURCH OF JESUS CHRIST OF LATTER-DAY SAINTS

Nibley 6 & Nibley UT West Stake

Approx. 3410 South 1200 West, Nibley, Utah
41.670809, -111.866775

Owner #: 514-4728
Plan Series: Heritage 24
County Parcel: 03:035:0016
BHD #: 2403
Date: 29 May 2025

Drawing Issue and Revision Schedule

#	Date	Description

AV SYSTEMS DETAILS

TA501

Autodesk Docs://250274 - Nibley 6 Meetinghouse/250274-Tech Central.rvt
5/27/2025 11:24:18 AM

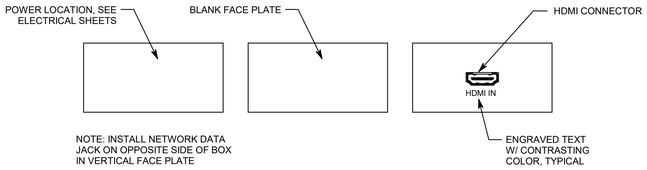

3 CONNECTION PANEL 'FB'

NO SCALE

FB

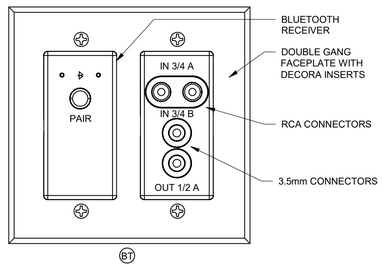

5 BLUETOOTH & LINE LEVEL AUDIO CONECTION 'BT'

NO SCALE

BT

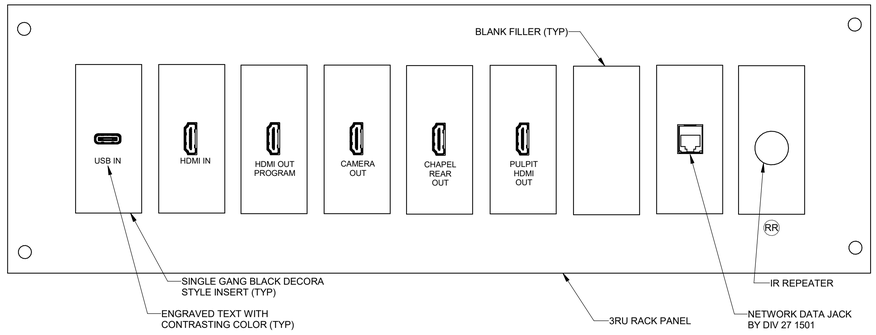

2 CONNECTION PANEL #11

NO SCALE

CP11

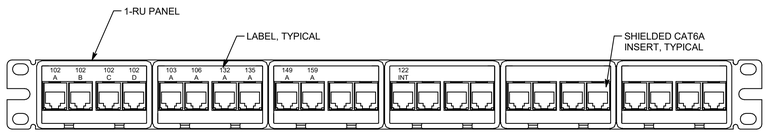

1-RU PANEL = 1 RACK UNIT (1.75")

NOTE:

NUMBER SHOWN MATCHES DESIGN ROOM NUMBERS. FINAL LABELING FOR PATCH PANEL AND OUTLETS SHALL MATCH SIGNAGE POSTED FOR ROOMS.

4 DPPA PATCH PANEL DETAIL, 24-PORT

NO SCALE

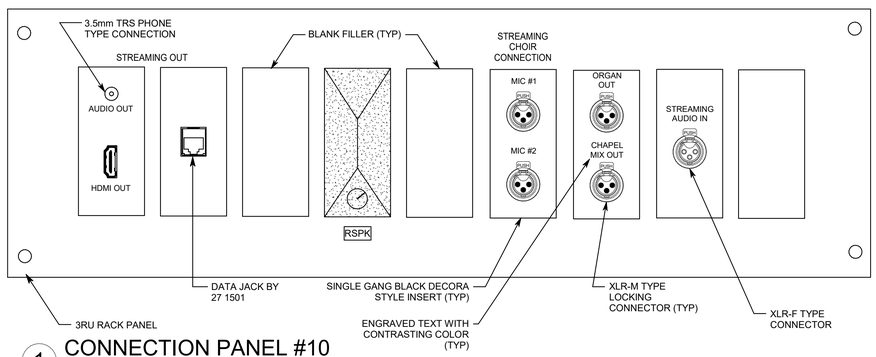

1 CONNECTION PANEL #10

NO SCALE

CP10

bhd ARCHITECTS
www.bhdarchitects.com
Phone 801.571.0010
Fax 801.571.0303
Toll Free 888.571.0010
65 East Wadsworth Park Drive
Suite 205 Draper, Utah 84020

LICENSED PROFESSIONAL ENGINEER
No. 5148728
DAVID G. HINCKLEY
5/29/25
STATE OF UTAH

SPECTRUM ENGINEERS
324 S. State St., Suite 400
Salt Lake City, UT 84111
800-678-7077
801-328-5151
fax: 801-328-5155
www.spectrum-engineers.com

THE CHURCH OF JESUS CHRIST OF LATTER-DAY SAINTS

Nibley 6 & Nibley UT West Stake

Approx. 3410 South 1200 West, Nibley, Utah
41.670809, -111.860775

Owner #: 514-4728
Plan Series: Heritage 24
County Parcel: 03:050:0016
BHD #: 2403
Date: 29 May 2025

Drawing Issue and Revision Schedule

#	Date	Description

AV SYSTEMS DETAILS

TA502

Autodesk Docs://250274 - Nibley 6 Meetinghouse/250274-Tech Central.rvt
5/27/2025 11:24:19 AM

AUDIO-VIDEO SYSTEM EQUIPMENT LIST

SYM	DESCRIPTION	QTY	ACCEPTABLE TYPES
	12" LADDER RACK W/ WALL AND RACK ATTACHMENTS	A/R	CHATSWORTH 10250-712 MIDDLE ATLANTIC CLB-6
HDA	HDMI DISTRIBUTION AMPLIFIER, 2 PORT SHELF	OFP	EXTRON DA2 HD 4K PLUS
			EXTRON RSB 123
HDA4	HDMI DISTRIBUTION AMPLIFIER, 4 PORT SHELF	OFP	EXTRON DA4 HD 4K PLUS
			EXTRON RSB 123
HBDA	HD BASE T DISTRIBUTION AMPLIFIER, 8 PORT	OFP	EXTRON DTP HD DA8 4K 330
HBR	HD BASE T WALL RECEIVER	OFP	EXTRON DTP R HWP 4K 331 D, DECORA BLANK INSERT AND DOUBLE GANG DECORA SURROUND
HBR2	HD BASE T RECEIVER, RACK MOUNT	OFP	EXTRON DTP HDMI 4K 330 RX
HBT2	HD BASE T TRANSMITTER, RACK MOUNT	OFP	EXTRON DTP HDMI 4K 330 TX
CP1	MICROPHONE INPUT MODULE	OFP	EMTECH MSC-M RCI LDS002-MF-X (X=COLOR)
	BLUETOOTH RECEIVER AND LINE LEVEL IN/OUT CONNECTION, DANTE	OFP	QSC ATTERO TECH unD6IO-BT RDL DD-BTN44
CP2	HDMI HD BASE T WALL RECEIVER	OFP	EXTRON DTP R HWP 4K 331 D
	HDMI HD BASE T WALL TRANSMITTER	OFP	EXTRON DTP T HWP 4K 331 D
VS	HDMI SWITCHER	OFP	EXTRON IN 1806/IN 1808
S2H	SDI TO HDMI CONVERTER	OFP	DECIMATOR 12G-CROSS
DPPA	HDBaseT PATCH PANEL, SHIELDED CAT6 CONNECTIONS FURNISHED AND INSTALLED BY VIDEO INSTALLER	OFP	SEE DETAIL 4/TA502
CP	CHAPEL CONTROL PEDESTAL PLATE	OFP	QSC TSC-50-G3 W/ 3-GANG 1/16" METAL BLACK ANODIZED MOUNTING PLATE SEE ARCHITECTURAL MILLWORK DETAILS
CC	CULTURAL CENTER REMOTE CONTROL	OFP	QSC TSC-50-G3
	WALL BOX WITH WINDOW	OFP	FSR WB-PSTSC
NS	OWNER STANDARD NETWORK SWITCH.	OFCI	OWNER FURNISHED-INSTALLED BY DIV 271501, SEE DETAIL TT602
SV	SOURCE AND VOLUME REMOTE CONTROL, 50 WATT	OFP	EMTECH MSC-S W/ MSC-V35 RCI EQUIVALENT SEE DETAIL 5/TA501
RM	FLAT SCREEN TV, 19", FRONT PANEL CONTROLS ACCESSIBLE FROM FRONT WITH RACK MOUNT	OFP	TOTEVISION LED 1562 HDR OR APPROVED EQUIVALENT
S4	4" LOUDSPEAKER LOUDSPEAKER GRILLE LOUDSPEAKER ENCLOSURE	OFP	BIAMP DESONO DX-IC4-W W/ SPA-NC300 JBL CONTROL 14C/T W/ MTC-24NC LOWELL ES-42T W/ ES-4-RIB
SM	4" LOUDSPEAKER	OFP	ATLAS SOUND FC104T72 LOWELL JR410-T470 ELECTRO-VOICE 205-4T
	LOUDSPEAKER GRILLE	OFP	ATLAS SOUND T720-4BT LOWELL CN-4M
	LOUDSPEAKER ENCLOSURE	OFP	ATLAS SOUND E410-11
S6	6" LOUDSPEAKER LOUDSPEAKER GRILLE LOUDSPEAKER ENCLOSURE	OFP	BIAMP DESONO DX-IC6-W W/ SPA-NC300 JBL CONTROL 16C/T W/ MTC-26NC LOWELL ES-62T W/ ES-6-RIB
MON	FLAT SCREEN TV, 65" IN MEETING ROOMS, 50" IN OFFICES	OFCI	OWNER FURNISHED, CONTRACTOR INSTALLED
	FLAT PANEL WALL MOUNT	OFCI	PEERLESS AV HPF650, OWNER FURNISHED, CONTRACTOR INSTALLED
HBR2	HD BASE T RECEIVER, FURNITURE MOUNT	OFP	EXTRON DTP HDMI 4K 330 RX
	ULTRA-SHORT THROW PROJECTOR	OFCI	OWNER FURNISHED
BT	BLUETOOTH RECEIVER AND LINE LEVEL IN/OUT CONNECTION, DANTE	OFP	QSC ATTERO TECH unD6IO-BT RDL DD-BTN44
STR	HDMI TO USB CONVERTER	OFP	RAZER RIPSAW X W/ 6' HDMI PATCH CORD
HAE	HDMI AUDIO EGRESS	1	EXTRON HAE 100 4K PLUS

SYM	DESCRIPTION	QTY	ACCEPTABLE TYPES
	HIGH IMPACT NYLON COVER PLATES FOR ALL DECORA STYLE AV MODULES, NUMBER OF GANGS AS REQUIRED. COLORS TO MATCH NEARBY ELECTRICAL DEVICES	OFP	HUBBELL OR LEVITON SEE PANEL DETAILS TA501 & TA502
M SM	MICROPHONE INPUT MODULE	OFP	EMTECH MSC-M RCI LDS002-MF-X (X=COLOR) (FOR 'SM', SEE DETAIL 5/ET601
A	ORGAN INPUT, CABLE MOUNTED MICROPHONE CONNECTOR	OFP	SWITCHCRAFT A3FB NEUTRIK NC3FX-BAG
	50'-0" MICROPHONE EXTENSION CABLES W/ BLACK CONNECTORS	1	WHIRLWIND MK450 PRO CO OR C2G EQUIVALENT
	25'-0" MICROPHONE EXTENSION CABLES W/ BLACK CONNECTORS	2	WHIRLWIND MK425 PRO CO OR C2G EQUIVALENT
	MICROPHONE, GENERAL USE	2	AUDIO-TECHNICA ATM610AS AKG D5-S
	MICROPHONE, CHAPEL PULPIT	1	AUDIO-TECHNICA ES905CLA
	MICROPHONE, SACRAMENT TABLE	1	EMTECH BLU-SM
	MICROPHONE,GOOSENECK. INSTALL ON PRIMARY ROOM PULPIT WITH METAL PLATE-MOUNTED FEMALE XLR WIRED TO MALE XLR INSIDE PULPIT IN WIREMOLD BOX.	1	AUDIO TECHNICA U855QL W/ CABLE, JUNCTION BOX, AND RCI LDS0002-RCI-PMJ
	10'-0" MICROPHONE EXTENSION CABLE W/ BLACK CONNECTORS	1	WHIRLWIND MK410 PRO CO OR C2G EQUIVALENT
	15'-0" MICROPHONE EXTENSION CABLE W/ BLACK RIGHT ANGLE MALE CONNECTOR FOR PRIMARY ROOM MICROPHONE	1	WHIRLWIND MK415 PRO CO OR C2G EQUIVALENT
	8'-0" PEDESTRIAN STRIP	1	TECHFLEX DRN 3.00BK
	MICROPHONE STAND, FLOOR TYPE	2	ATLAS SOUND MS-20E W/PB21 XEB KONIG AND MEYER 210/9
ALS	ASSISTED LISTENING SYSTEM & TRANSLATION SYSTEM, WIFI, W/ 8 RECEIVERS	1	LISTEN MH-02-01
V	VOLUME CONTROL MODULE	OFP	EMTECH MSC-V10 OR V35 AS APPROPRIATE FOR SPEAKER LOAD RCI LDS002-MSCV-35
SVM	SOURCE AND VOLUME CONTROL	OFP	EMTECH MSC-S WITH EMTECH MSC-V10 WITH SPECIAL LABELING ACCORDING TO DETAIL 4/TA501
CM	MICROPHONE INPUT, DUAL, W/ CUSTOM LABEL	OFP	EMTECH MSC-D, SEE DETAIL 6/TA501
	CAMERA, PTZ, IP STREAMING & CONTROL, CMOS, SDI OUT, WHITE W/ MOUNT	OFP	CLEAR TOUCH RL500 W/ CTS-WMNTB-RL45 SHELF
	INSTALLED HDMI INTERCONNECT CABLE, 3'	A/R	HDMI HIGH SPEED
	INSTALLED HDMI INTERCONNECT CABLE, 6'	A/R	
	HDMI CABLE, 15 FEET, FOR OWNER	3	
	HDMI CABLE, 50 FEET, FOR OWNER	1	
	USB-C TO DISPLAY PORT CABLE INSTALLED BETWEEN 'CP11' & 'VS'	1	
1	AV EQUIPMENT CABINET, FLOOR STANDING W/ FRONT DOOR, BACK DOOR, SIDE PANEL AND REAR RACK RAILS	OFP	MIDDLE ATLANTIC MRK-4426, WITH VFD-44, SPN-44-267, MW-LA, MW-LVRD-44 ATLAS 744-25, WITH MPFD44, SPS44-25, FRD-44
	DRAWER	1	MIDDLE ATLANTIC UD3 ATLAS SOUND SD3-14
	SHELF	1	MIDDLE ATLANTIC SS LOWELL RSD-116
HWM	HORIZONTAL WIRE MANAGER, NOT MORE THAN 3" DEEP	A/R	MIDDLE ATLANTIC OR AS APPROVED
2	DATA RACK, SWING FRAME	OFP	SEE VOICE-DATA EQUIPMENT LIST, SHEET TT601
ADSP	AUDIO MIXER, DIGITAL SIGNAL PROCESSOR W/ POWER SUPPLY, I/O MODULES, RELAYS, AND ACCESSORIES AS REQUIRED.	OFP	QSC CORE 110F V2 W/ UCI & SCRIPTING LICENSES & DANTE LICENCE AS REQUIRED
IOE	IO EXPANSION	1	QSC QIO-GP8X8
IPCC	IP CONTACT CLOSURE MODULE	1	GLOBAL CACHE; TACH IP2CC
	24V POWER SUPPLY	1	RDL PS-24AS
PA	POWER AMPLIFIERS PA1-PA8 (8 x 300 WATT)	OFP	QSC CX-Q 4K8
IR	INFRARED DETECTORS COVER CABLE W/ LIGHT COLORED TUBING	OFP	EMTECH BLU-IR
D	MIC INPUT, DOUBLE	OFP	EMTECH MSC-D OR RCI EQUIVALENT
CP3	CULTURAL CENTER AV CONNECTION PANEL #3	OFP	EMTECH MSC-M OR RCI LDS002-MF-X (X=COLOR) EXTRON DTP R HWP 4K 331 D SEE DETAIL 3/TA501
CP4	CONNECTION PANEL #4	OFP	EMTECH MSC-D OR RCI EQUIVALENT EMTECH MSV-H OR RCI MI 9305 HDMI HIGHSPEED CABLE USE DETAIL 7/TA501
CP5	CONNECTION PANEL #5	OFP	USB-C INPUT ON DECORA INSERT WITH CUSTOM LABELING SEE DETAIL 10/TA501
CP6	CONNECTION PANEL #6	OFP	EMTECH MSV- H RCI MI 9305 W/ HDMI HIGH SPEED CABLE SEE DETAIL 9/TA501

SYM	DESCRIPTION	QTY	ACCEPTABLE TYPES
HDP	HELP DESK PANEL, 1 RU	1	CUSTOM LABELING, SEE DETAIL 2/TA501
STS	STANDARD TERMINAL STRIP	OFP	
ET	ISOLATION TRANSFORMER	A/R	RDL TX-1A PRO CO LOT-1
TVSSE	SURGE SUPPRESSOR AND SWITCHER IP ENABLED W/ UL LISTED PLUG STRIP PROVIDE FOR EQUIPMENT RACK #1 AND #2	OFP	SURGEX SX-AX20E MIDDLE ATLANTIC RLNK P920R-SP W/ RLNK-CONT, RLNK-TEMP
	POWER STRIP, UL LISTED	A/R	6 OUTLET POWER STRIP OR EQUAL
	TVSS/ADSP RELAY INTERFACE	A/R	24 VDC RELAY, POWER SUPPLY AND BASE
TVSS	NON SEQUENCING SURGE SUPPRESSOR	OFP	MIDDLE ATLANTIC PD 915R-SP
CP10	CONNECTION PANEL #10	1	LOWELL D9P-ID-3 OR AS APPROVED CUSTOM XLR INPUT CUSTOM DUAL XLR OUTPUTS CUSTOM HDMI AND 3.5mm TRS CONNECTION *CUSTOM DEVICES MUST BE FABRICATED ON METAL DECORA INSERTS AS SHOWN ON 1/TA502
RSPK	RACK MONITOR SPEAKER, DECORA	1	RDL D-PSP1/PS-24AS
CP11	CONNECTION PANEL #11	OFP	LOWELL D9P-ID-3 OR AS APPROVED CUSTOM HDMI INPUT CUSTOM HDMI OUTPUTS CUSTOM USB-C INPUT *CUSTOM DEVICES MUST BE FABRICATED ON METAL DECORA INSERTS AS SHOWN ON 2/TA502
RR IR HUB	INFRARED RECEIVER W/ HUB, POWER SUPPLY, AND FLASHER	A/R	CABLES2GO C2G 40430 & C2G 40478 OR EQUAL
FB	CONNECTION PANEL "FB"	1	EMTECH MSV- H RCI MI-9305 OR CUSTOM PLATE THAT INTERFACES WITH INSTALLED FLOOR BOX HDMI HIGHSPEED CABLE

MANUFACTURER'S NAMES AND TELEPHONE NUMBERS ARE LISTED IN THE SPECIFICATIONS
A/R = AS REQUIRED, OFP = OBTAIN FROM PLANS, OFCI = OWNER FURNISHED CONTRACTOR INSTALLED EQUIPMENT

GENERAL PROJECT NOTES

1. NO CHANGES SHALL BE MADE WITHOUT THE PROJECT ACOUSTICAL AND TECHNOLOGY CONSULTANT'S WRITTEN CONSENT.
2. REFER TO DRAWINGS FOR EXACT NUMBER OF COMPONENTS USED IF NOT SPECIFIED IN EQUIPMENT LIST.
3. SEE 'ET' SHEETS FOR DEVICE LOCATIONS AND COORDINATION.
4. SEE SHEETS TT601 AND TT602 FOR ADDITIONAL COORDINATION.
5. SECURE ALL LOUDSPEAKER ASSEMBLIES WITH SEISMIC RESTRAINTS. MOUNT ALL LOUDSPEAKER ASSEMBLIES IN SUSPENDED TILE CEILINGS ON TILE BRIDGES EVEN IF NOT SHOWN IN EQUIPMENT LIST.
6. MOUNT ALS ANTENNA VERTICALLY IN ATTIC IN LOCATION CHOSEN TO PROVIDE MAXIMUM COVERAGE OF CHAPEL AND CULTURAL CENTER.

GENERAL SHEET NOTES

1. CONNECT CHAPEL AND ROSTRUM SPEAKERS TOGETHER AT TERMINAL STRIP IN RACK. DISCONNECT CHAPEL SPEAKERS FOR FOLDING PARTITION TESTING.
2. UNLESS OTHERWISE NOTED, MODULES SHALL BE PURCHASED FROM MANUFACTURER LISTED, NOT CUSTOM MADE. COLOR OF INSERTS AND COVER PLATES TO MATCH ELECTRICAL DEVICES.
3. 'TVSSE' DEVICES CAN PROVIDE EMAIL NOTIFICATION WHEN POWER AND TEMPERATURE THRESHOLDS ARE EXCEEDED. SET EMAIL NOTIFICATIONS TO BE SENT TO FM PROVIDED EMAILS ADDRESS WHEN MANUFACTURE RECOMMENDED POWER AND TEMPERATURE LIMITS ARE EXCEEDED.
4. FURNISH SPEAKER ENCLOSURES AND TRIM RINGS TO DIVISION 26 INSTALLER FOR INSTALLATION.
5. REFER TO A SHEETS FOR COORDINATION OF ITEMS MOUNTED IN WOOD MILLWORK.

bhd ARCHITECTS
www.bhdarchitects.com
Phone 801.571.0010
Fax 801.571.0303
Toll Free 888.571.0010
65 East Wadsworth Park Drive
Suite 205 Draper, Utah 84020

LICENSED PROFESSIONAL ENGINEER
No. 5148728
DAVID G. HINCKLEY
5/29/25
STATE OF UTAH

SPECTRUM ENGINEERS
324 S. State St., Suite 400
Salt Lake City, UT 84111
800-678-7077
801-328-5151
fax: 801-328-5155
www.spectrum-engineers.com

THE CHURCH OF JESUS CHRIST OF LATTER-DAY SAINTS

Nibley 6 &
Nibley UT West Stake

Approx. 3410 South 1200 West, Nibley, Utah
41.670809, -111.860775

BHD #: 2403
County Parcel: 03:050:0016
Plan Series: Heritage 24
Owner #: 514-4728
Date: 29 May 2025

Drawing Issue and Revision Schedule

#	Date	Description

AV SYSTEMS SCHEDULES AND NOTES

TA601

Autodesk Docs://250274 - Nibley 6 Meetinghouse/250274-Tech Central.rvt
5/27/2025 11:24:23 AM

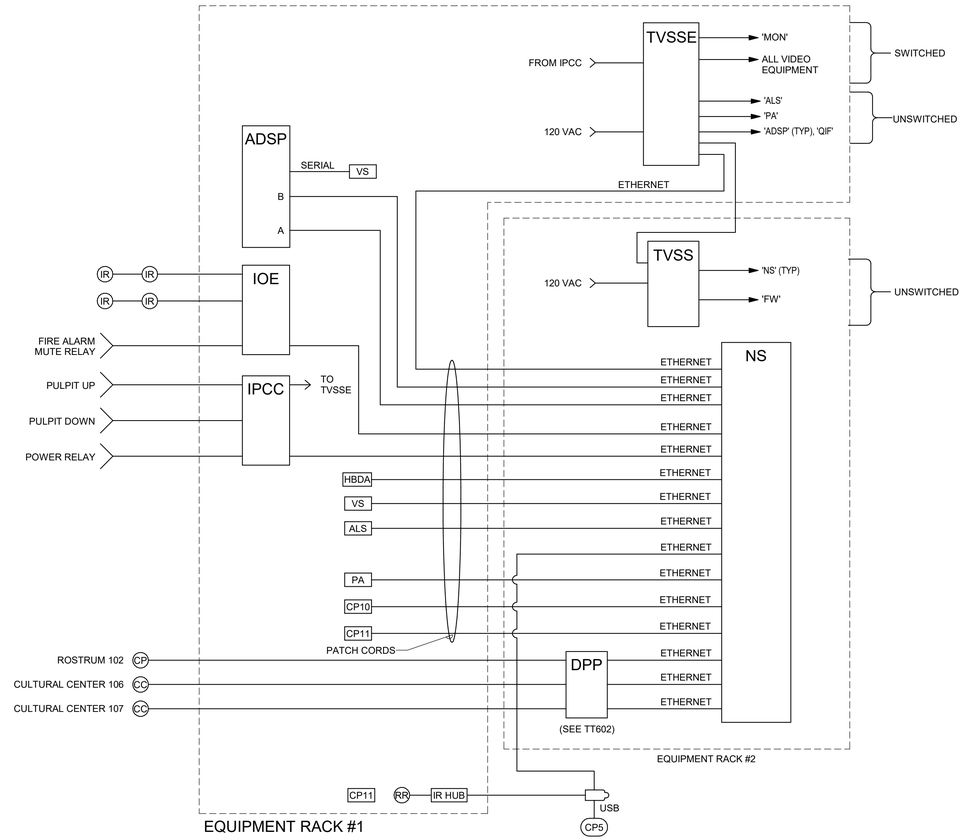

2 CONTROL/LOGIC RISER DIAGRAM

NO SCALE

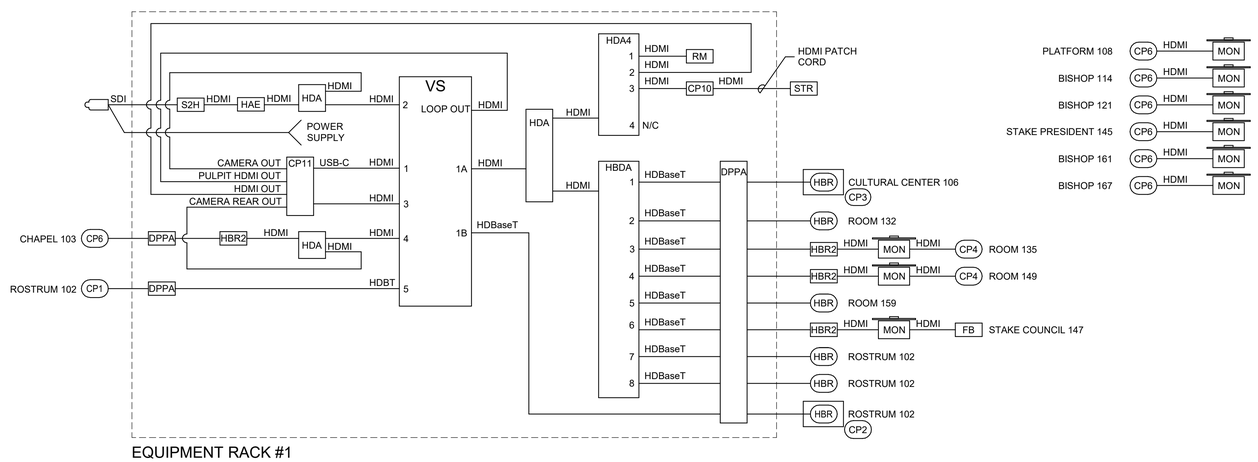

1 VIDEO SYSTEM RISER DIAGRAM

NO SCALE

GENERAL SHEET NOTES

1. WHERE MULTIPLE DEVICES ARE SHOWN ON A SINGLE 'TVSSE' OUTLET, PROVIDE PLUG STRIPS AS REQUIRED.
2. QSC CONTROLLER MUST BE CONNECTED TO POE PORTS.
3. HDBASE T AND QSC DEVICES ARE IP COMMUNICATIONS PROTOCOL DEVICES. TWISTED PAIR CABLES MUST MEET STANDARDS DEFINED IN THE HORIZONTAL COMMUNICATIONS SPECIFICATIONS.
4. N/C INDICATES NO CONNECTION.
5. ADSP AND CONTROL/LOGIC WIRING IS GENERIC. SEE MANUFACTURER'S INSTRUCTION SHEET FOR WIRING DETAILS.
6. USE DHCP FOR IP ADDRESS ASSIGNMENTS.
7. CONFIGURE NETWORK SWITCH FOR PROPER NETWORK ZONES. NETWORK PORTS CONNECTED TO CONVENIENCE OUTLETS AND QSC DEVICE B PORTS SHALL BE CONFIGURED FOR PUBLIC ACCESS. ALL OTHER AV AND FACILITIES DEVICES SHALL BE CONNECTED TO PORTS CONFIGURED FOR FACILITIES ZONE ACCESS.
8. CONFIGURE RLNK TO PROVIDE 2 LEVELS OF POWER RESET. LEVEL 1 SHALL TURN OFF ALL "SWITCHED DEVICES". LEVEL 2 SHALL BE TRIGGERED AT 3AM, AND INCLUDE AMPLIFIER. IN ADDITION TO LEVEL 1 DEVICES. USE IP TRIGGERS.
9. CONFIGURE 'ADSP' TO PROVIDE SERIAL CONTROL OF 'VS' INCLUDING INPUT SELECTION, AND VIDEO MUTE. WHEN VIDEO IS MUTED "LOGO" SCREEN SHALL BE DISPLAYED. UPLOAD STANDARD "MEETING IN PROGRESS" IMAGE FILE TO 'VS'.

bhd ARCHITECTS
www.bhdarchitects.com
Phone 801.571.0010
Fax 801.571.0303
Toll Free 888.571.0010
65 East Wadsworth Park Drive
Suite 205 Draper, Utah 84020

LICENSED PROFESSIONAL ENGINEER
No. 5148728
DAVID G. HINCKLEY
5/29/25
STATE OF UTAH

SPECTRUM ENGINEERS
324 S. State St., Suite 400
Salt Lake City, UT 84111
800-678-7077
801-328-5151
fax: 801-328-5155
www.spectrum-engineers.com

THE CHURCH OF JESUS CHRIST OF LATTER-DAY SAINTS

Nibley 6 &
Nibley UT West Stake

Approx. 3410 South 1200 West, Nibley, Utah
41.670809, -111.860775

Date: 29 May 2025
BHD #: 2403
County Parcel: 03:035:0016
Plan Series: Heritage 24
Owner #: 514-4728

Drawing Issue and Revision Schedule

#	Date	Description

AV SYSTEMS DIAGRAMS

TA602

Autodesk Docs://250274 - Nibley 6 Meetinghouse/250274-Tech Central.rvt
5/27/2025 11:24:25 AM

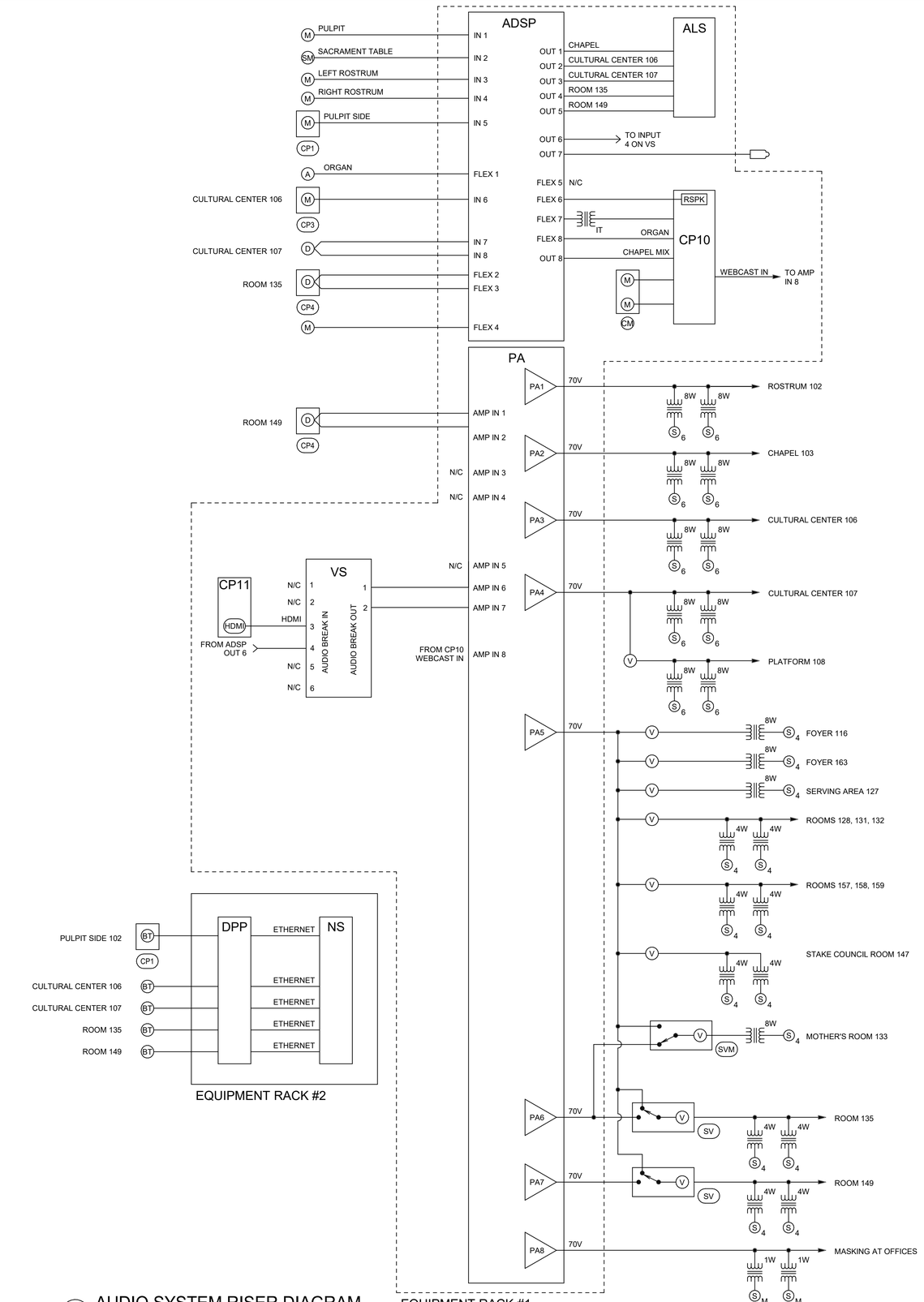

1 AUDIO SYSTEM RISER DIAGRAM
NO SCALE

GENERAL SHEET NOTES

1. WHERE MULTIPLE DEVICES ARE SHOWN ON A SINGLE 'TVSS' OUTLET, PROVIDE PLUG STRIPS AS REQUIRED.
2. QSC CONTROLLER MUST BE CONNECTED TO POE PORTS.
3. HDBASE T AND QSC DEVICES ARE IP COMMUNICATIONS PROTOCOL DEVICES. TWISTED PAIR CABLES MUST MEET STANDARDS DEFINED IN THE HORIZONTAL COMMUNICATIONS SPECIFICATIONS.
4. N/C INDICATES NO CONNECTION.
5. ADSP AND CONTROL/LOGIC WIRING IS GENERIC. SEE MANUFACTURER'S INSTRUCTION SHEET FOR WIRING DETAILS.
6. USE DHCP FOR IP ADDRESS ASSIGNMENTS.
7. PROVIDE A STATIC IP ADDRESS FOR THE ALS SYSTEM. VERIFY ADDRESS WITH OWNER.

bhd ARCHITECTS
www.bhdarchitects.com
Phone 801.571.0010
Fax 801.571.0303
Toll Free 888.571.0010
65 East Wadsworth Park Drive
Suite 205 Draper, Utah 84020

LICENSED PROFESSIONAL ENGINEER
No. 5148728
DAVID G. HINCKLEY
5/29/25
STATE OF UTAH

SPECTRUM ENGINEERS
324 S. State St., Suite 400
Salt Lake City, UT 84111
800-678-7077
801-328-5151
fax: 801-328-5155
www.spectrum-engineers.com

THE CHURCH OF JESUS CHRIST OF LATTER-DAY SAINTS

Nibley 6 &
Nibley UT West Stake

Approx. 3410 South 1200 West, Nibley, Utah
41.672809, -111.846775

BHD #: 2403
County Parcel: 03:050:0016
Plan Series: Heritage 24
Owner #: 514-4728
Date: 29 May 2025

Drawing Issue and Revision Schedule

#	Date	Description

AV SYSTEMS DIAGRAMS

TA603

Autodesk Docs://250274 - Nibley 6 Meetinghouse/250274-Tech Central.rvt
5/27/2025 11:24:27 AM

VOICE-DATA SYSTEM EQUIPMENT/CABLE LIST

THE FOLLOWING IS A PARTIAL LIST OF MATERIALS FOR THE DATA/PHONE SYSTEM. REFER TO SPECIFICATION 27 1501 FOR FULL REQUIREMENTS. VERIFY ALL PART NUMBERS WITH MANUFACTURER'S CATALOG NUMBERS AND NOTIFY CONSULTANT OF DISCREPANCIES PRIOR TO BIDDING. FURNISH MISCELLANEOUS HARDWARE NOT LISTED TO PROVIDE A COMPLETE SYSTEM.

SYM	DESCRIPTION	ACCEPTABLE TYPES
TELCO DEMARC	TELECOMMUNICATIONS PROVIDER DEMARCATION POINT	FURNISHED AND INSTALLED BY PROVIDER
ISP DEMARC	INTERNET SERVICE PROVIDER DEMARCATION POINT	FURNISHED AND INSTALLED BY PROVIDER
DPP	PATCH PANEL, DATA, 48-PORT W/ CAT 6 INSERT, BLUE (QUANTITIES OF PORTS AS REQUIRED +25%)	SEE SPECIFICATION 271501
TVSS	SURGE SUPPRESSOR AND SWITCHER W/ UL LISTED PLUG STRIP	FURNISHED AND INSTALLED BY AV INSTALLER
	UL LISTED POWER STRIP	6 OUTLET POWER STRIP OR EQUAL
D(#)	STATION CABLE, DATA-CAT 6, DATA, BLUE JACKET (#) INDICATES NUMBER OF CABLES IF MORE THAN ONE	SEE SPECIFICATION 271501
WAP ▽	DATA OUTLET, WIRELESS ACCESS POINT SINGLE GANG BEZEL	SEE SPECIFICATION 271501 SEE DETAIL 2/TT602
	BEZEL INSERTS	SEE SPECIFICATION 271501
	CAT 6 JACK-DATA (1)	SEE SPECIFICATION 271501
▼	VOICE OUTLET SINGLE GANG BEZEL	SEE SPECIFICATION 271501
	BEZEL INSERTS	SEE SPECIFICATION 271501
	CAT 6 JACK-DATA (1)	SEE SPECIFICATION 271501
▽ ▽2	DATA OUTLET SINGLE GANG BEZEL	SEE SPECIFICATION 271501
	BEZEL INSERTS	SEE SPECIFICATION 271501
	CAT 6 JACK-DATA (1 OR 2)	SEE SPECIFICATION 271501
FB	DATA OUTLET BEZEL COMPATIBLE WITH FLOOR BOX, SEE DETAIL 1/ET601	SEE SPECIFICATION 271501
	BEZEL INSERTS	SEE SPECIFICATION 271501
	CAT 6 JACK-DATA (1)	SEE SPECIFICATION 271501
	COPPER CAT 6 PATCH CABLES (INCLUDE CABLES LONG ENOUGH TO CONNECT TO EQUIPMENT IN EQUIPMENT CABINET RACK #1 AS NEEDED)	SEE SPECIFICATION 271501
	CAT 6 J-HOOKS	CADDY CAT32Z34
HWM	HORIZONTAL WIRE MANAGER HORIZONTAL WIRE MANAGER SHALL NOT HAVE A DEPTH OF MORE THAN 3"	SEE SPECIFICATION 271501
NS	NETWORK SWITCH, OWNER STANDARD	OWNER FURNISHED-CONTRACTOR INSTALLED
	RACK MOUNT SHELF	MIDDLE ATLANTIC U2
BMG	BUILDING MANAGEMENT GATEWAY	FURNISHED AND INSTALLED BY MECHANICAL CONTROLS CONTRACTOR
FW	INTERNET FIREWALL, OWNER STANDARD,	OWNER FURNISHED-CONTRACTOR INSTALLED
	RACK MOUNT SHELF	MIDDLE ATLANTIC U2
ISP MODEM	INTERNET SERVICE MODEM	OWNER FURNISHED-CONTRACTOR INSTALLED
	WALL MOUNT SHELF	MIDDLE ATLANTIC WMS-20
WAP	WIRELESS ACCESS POINT. OWNER STANDARD.	OWNER FURNISHED-CONTRACTOR INSTALLED. INSTALL AT EACH 'WAP' LOCATION SHOWN ON ET102. SEE DETAIL 2/TT602
2	DATA RACK, SWING FRAME	MIDDLE ATLANTIC SFR-20-18 SEE DETAILS 2/ET602 AND 4/TT602
CC CP BT CP1	AUDIO VIDEO USER INTERFACE	INTERFACE BY AV INSTALLER; DATA CONNECTION BY 27 1501 SEE TA601, TA602, TA603
	CAT6 DATA JACK	SEE SPECIFICATION 27 1501
NHP	NETWORK HELP DESK PANEL	1RU RACK PANEL WITH CUSTOM LABELING SEE DETAIL 3/TT602

NOTE: ALL PATCH PANELS AND ACCESSORIES SHALL BE BLACK IN COLOR

AUDIO-VIDEO CABLE EQUIPMENT LIST

SYM	DESCRIPTION	QTY	ACCEPTABLE TYPES
A(X)	HDMI CABLE, (X) INDICATES NUMBER OF CABLES, IF MORE THAN ONE	A/R	BELDEN HD 800-XX LIBERTY HD 1000-XX OR AS APPROVED BY CONSULTANT ('XX' LENGTH REQUIRED)
C(X)	CONTROL CABLE, WHITE JACKET (X) INDICATES NUMBER OF CABLES, IF MORE THAN ONE	A/R	BELDEN 1872A WEST PENN 4246 LIBERTY 24-4P-L6-EN OR AS APPROVED BY CONSULTANT
H(X)	HDBASE T CABLE, BLACK JACKET, (X) INDICATES NUMBER OF CABLES, IF MORE THAN ONE	A/R	WEST PENN 4246AF COMMSCOPE 1291B F/UTP BELDEN 10GX82F OR AS APPROVED BY CONSULTANT
L(X)	LINE LEVEL CABLE, (X) INDICATES NUMBER OF CABLES, IF MORE THAN ONE	A/R	BELDEN 9451 WEST PENN 454 LIBERTY 22-1P-EZ OR AS APPROVED BY CONSULTANT
LC	LINE LEVEL CABLE FOR PULPIT LIFT MOTOR 3 CONDUCTOR, 20 AWG	A/R	BELDEN 8772 WEST PENN 232 OR AS APPROVED BY CONSULTANT
M(X)	MICROPHONE CABLE, (X) INDICATES NUMBER OF CABLES, IF MORE THAN ONE	A/R	LIBERTY 22-1P-EZ BELDEN 9451 WEST PENN 454 OR AS APPROVED BY CONSULTANT
P(X)	HD-SDI CABLE, RG-6, (X) INDICATES NUMBER OF CABLES, IF MORE THAN ONE	A/R	WEST PENN 6350 BELDEN 1694A OR AS APPROVED BY CONSULTANT
S(X)	SPEAKER CABLE, (X) INDICATES NUMBER OF CABLES, IF MORE THAN ONE	A/R	BELDEN 8471 WEST PENN 225 LIBERTY 16-2C-GRY OR AS APPROVED BY CONSULTANT
UC(X)	USB-C CABLE, TERMINATED AT EACH END, USB 3 COMPLIANT	A/R	BULLET TRAIN AC-BTSSF-USB3-A2C-XX OR APPROVED EQUIVALENT (XX=LENGTH REQUIRED)

MANUFACTURER'S NAMES AND TELEPHONE NUMBERS ARE LISTED IN THE SPECIFICATIONS
A/R = AS REQUIRED

GENERAL PROJECT NOTES

1. LABEL ALL CABLE REGARDLESS OF LENGTH.
2. THE EQUIPMENT LABELING IDENTIFIED ON DETAILS IN THESE DRAWINGS ARE EXAMPLES ONLY. PRIOR TO FABRICATION, SUBMIT THE NOMENCLATURE FOR ALL CABLING AND EQUIPMENT TO THE CONSULTANT APPROVAL.
3. COIL 5' OF EXTRA CABLE AT THE TECHNOLOGY ROOM AND 18"" AT THE OUTLET FOR EACH CABLE RUN.
4. USE CADDY CLIPS OR BRIDLE RINGS FOR ALL CABLE OUTSIDE OF CONDUIT. GENERAL PROJECT NOTES ET601.
5. ALL CABLE AND UTP TO TERMINATE ON BOTH ENDS.
6. ALL VOICE-DATA OUTLETS ON WALLS SHALL BE MOUNTED WITHIN 6" OF A POWER OUTLET. IF CONTRADICTIONS ARISE ON PLANS, NOTIFY ENGINEER.
7. REFER TO SHEET ET101 AND ET102 FOR VOICE-DATA JACK LOCATIONS AND ROUTING OF AV CABLE.
8. EQUIPMENT RACK TO BE INSTALLED BY AV INSTALLER.
9. ALL VOICE-DATA CABLING AND EQUIPMENT SHALL BE INSTALLED ACCORDING TO DIVISION 27 1501.
10. INSTALL OWNER FURNISHED NETWORK EQUIPMENT SHOWN. AS PART OF INSTALLATION SET UP AND CONFIGURE DEVICES IN ACCORDANCE WITH OWNER REQUIREMENTS. COORDINATE WITH LOCAL FACILITIES MANAGER.
11. COORDINATE WITH FACILITIES MANAGER AND PROJECT MANAGER WELL IN ADVANCE OF PROJECT COMPLETION TO ENSURE INSTALLATION OF ALL OWNER FURNISHED EQUIPMENT IS INSTALLED AND SET UP PROPERLY. IN ADDITION, ENSURE OWNER PROVIDES INTERNET SERVICE TO BUILDING PRIOR TO FINAL INSTALLATION OF AV AND VOICE DATA EQUIPMENT.
12. INSTALL A DATA PATCH CABLE TO NS FOR ALL DATA LOCATIONS SHOWN ON PLANS.
13. FURNISH AND INSTALL ALL AUDIO-VIDEO CABLE SHOWN. PROVIDE 3' EXTRA CABLE AT OUTLET END AND 15' EXTRA CABLE AT EQUIPMENT RACK. COIL AND LABEL.
14. INSTALL PATCH IN AND SET-UP OWNER FURNISHED WIRELESS ACCESS POINTS.
15. SEE "TA" AND "ET" SHEETS FOR DEVICE LOCATIONS AND ADDITIONAL COORDINATION.
16. ALL HORIZONTAL CABLING AND TERMINATIONS SHALL BE FROM SINGLE MANUFACTURER, AS NECESSARY SUCH THAT INSTALLER MAY PROVIDE EXTENDED SYSTEM WARRANTY OF 25 YEARS OR MORE.
17. CABLE RUNS ORIGINATING FROM OUTSIDE THE RACK SHALL BE TERMINATED TO DPP, WITH PATCH CABLE TO NETWORK SWITCH. DEVICES IN THE SAME RACK AS THE NETWORK SWITCH MAY BE CONNECTED DIRECTLY TO THE SWITCH.

bhd ARCHITECTS
www.bhdarchitects.com
Phone 801.571.0010
Fax 801.571.0303
Toll Free 888.571.0010
65 East Wadsworth Park Drive
Suite 205 Draper, Utah 84020

LICENSED PROFESSIONAL ENGINEER
No. 5148728
DAVID G. HINCKLEY
5/29/25
STATE OF UTAH

SPECTRUM ENGINEERS
324 S. State St., Suite 400
Salt Lake City, UT 84111
800-678-7077
801-328-5151
fax: 801-328-5155
www.spectrum-engineers.com

THE CHURCH OF JESUS CHRIST OF LATTER-DAY SAINTS

Nibley 6 &
Nibley UT West Stake

Approx. 3410 South 1200 West, Nibley, Utah
41.670809, -111.860775

BHD #: 2403
County Parcel: 03:050:0016
Plan Series: Heritage 24
Owner #: 514-4728
Date: 29 May 2025

Drawing Issue and Revision Schedule

#	Date	Description

TELECOM SCHEDULES, NOTES, AND DIAGRAM

TT601

Autodesk Docs://250274 - Nibley 6 Meetinghouse/250274-Tech Central.rvt
5/27/2025 11:24:29 AM

3 HELP DESK PANEL

NO SCALE

NHP

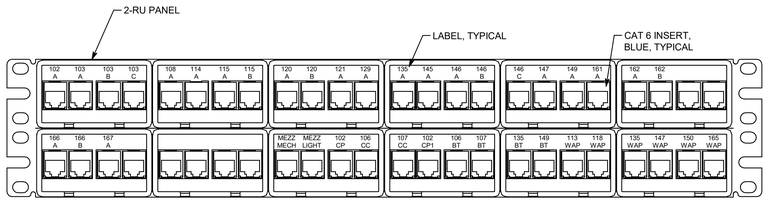

NOTE:

NUMBER SHOWN MATCHES DESIGN ROOM NUMBERS. FINAL LABELING FOR PATCH PANEL AND OUTLETS SHALL MATCH SIGNAGE POSTED FOR ROOMS.

8 PATCH PANEL DETAIL, 48-PORT, TYPICAL

NO SCALE

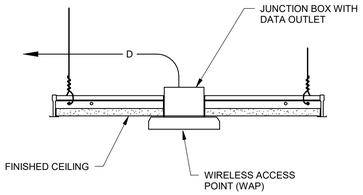

2 WIRELESS ACCESS POINT DETAIL

NO SCALE

WAP

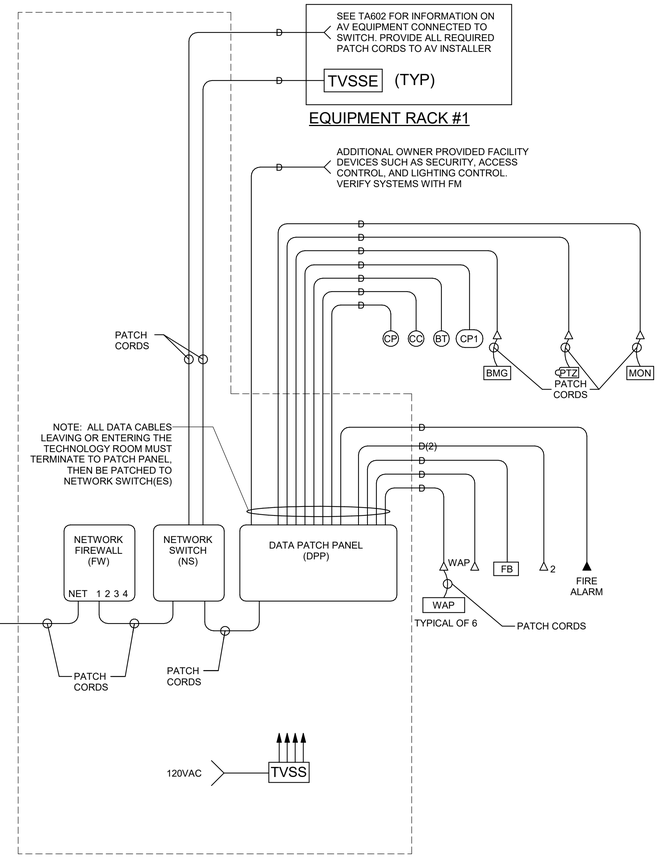

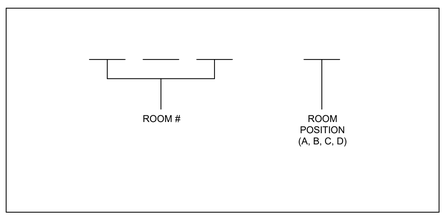

7 CABLE LABEL DETAIL

NO SCALE

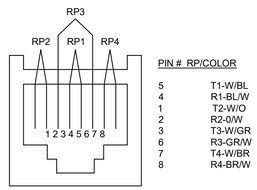

PIN # RP/COLOR

5	T1-W/BL
4	R1-BL/W
1	T2-W/O
2	R2-0/W
3	T3-W/GR
6	R3-GR/W
7	T4-W/BR
8	R4-BR/W

5 OUTLET PINNING DETAIL

NO SCALE

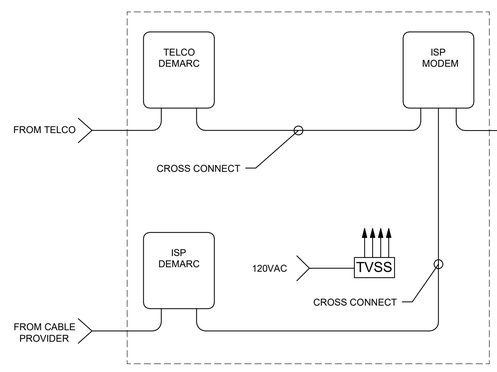

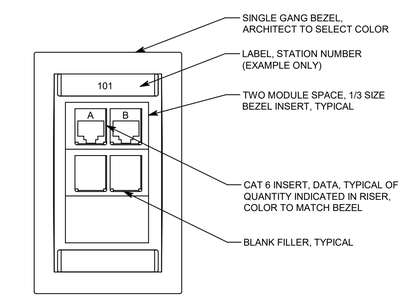

6 TYP DATA OUTLET

NO SCALE

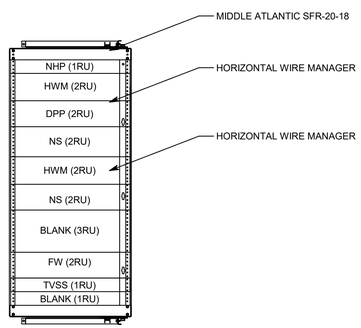

4 DATA RACK ELEVATION

NO SCALE

1 STRUCTURED CABLING RISER DIAGRAM

bhd ARCHITECTS
www.bhdarchitects.com
Phone 801.571.0010
Fax 801.571.0303
Toll Free 888.571.0010
65 East Wadsworth Park Drive
Suite 205 Draper, Utah 84020

LICENSED PROFESSIONAL ENGINEER
No. 5148728
DAVID G. HINCKLEY
5/29/25
STATE OF UTAH

SPECTRUM ENGINEERS
324 S. State St., Suite 400
Salt Lake City, UT 84111
800-678-7077
801-328-5151
fax: 801-328-5155
www.spectrum-engineers.com

THE CHURCH OF JESUS CHRIST OF LATTER-DAY SAINTS

Nibley 6 &
Nibley UT West Stake

Approx. 3410 South 1200 West, Nibley, Utah
41.672809, -111.840775

BHD #: 2403
Date: 29 May 2025
County Parcel: 03:050:0016
Plan Series: Heritage 24
Owner #: 514-4728

Drawing Issue and Revision Schedule

#	Date	Description

TELECOM NOTES AND DETAILS

TT602

Autodesk Docs://250274 - Nibley 6 Meetinghouse/250274-Tech Central.rvt
5/27/2025 11:24:30 AM