Hobbled Dog Cidery

625 West 8300 South
Paradise, UT 84328

NOTE TO CONTACTOR/OWNER

REQUIRED MEANS OF EGRESS AND FIRE PROTECTION SYSTEMS SHALL BE MAINTAINED DURING CONSTRUCTION AND DEMOLITION, REMODELING OR ALTERATIONS. FIRE PREVENTION BUREAU STAFF SHALL APPROVE REVIEW OF ANY EXITING ALTERATIONS. AS PER IFC SECTION 3311.2

CONTRACTOR IS TO ABIDE BY UTAH STATE RULES:

R307-309 FOR DUST CONTROL (http://www.rules.utah.gov/publicat/code/r307/r307-309.htm#T6

R307-801 FOR ABESTOS CONTROL (http://www.rules.utah.gov/publicat/code/r307/r307-801.htm

R307-840 FOR LEAD CONTROL (http://www.rules.utah.gov/publicat/code/r307/r307-840.htm

AND/OR TO CONTACT UTAH DIVISION OF AIR QUALITY (801) 536-4000

D1 NOTES TO CONTRACTOR
NOT TO SCALE

CODE ANALYSIS

PROJECT NAME: HOBBLED DOG CIDERY
ADDRESS: 625 WEST 8300 SOUTH
PROPOSED USE: PARADISE, UTAH 84328
BUSINESS/MANUFACTURING
OWNER/CONTACT PERSON: DWA CONSTRUCTION
JEN ANDERSON - 435-752-6860

JURISDICTION: CACHE COUNTY, UTAH

CODE:

2021 INTERNATIONAL BUILDING CODE
2021 INTERNATIONAL PLUMBING CODE
2021 INTERNATIONAL FIRE CODE
2021 INTERNATIONAL ENERGY CODE COUNCIL
A117.1 AMERICANS NATIONAL STANDARDS INSTITUTE
PROJECT TO COMPLY W/ ICC A117.1-2017
2021 INTERNATIONAL MECHANICAL CODE
2020 NATIONAL ELECTRICAL CODE
2021 NATIONAL FUEL GAS CODE
AMERICANS W/ DISABILITIES ACT ACCESSIBILITY GUIDELINES
A17.1 AMERICAN SOCIETY OF MECHANICAL ENGINEERS

GENERAL:

MIXED OCCUPANCY? B (Small Asembly)/F-2
REQUIRED FIRE SEPARATION 2 (TABLE 508.4)

FIRE RESISTIVE REQUIREMENTS (TABLE 601):

CONSTRUCTION TYPE	IIB	
STRUCTURAL FRAME	0 HR	RATING
BEARING WALLS		
EXTERIOR	0 HR	RATING
INTERIOR	0 HR	RATING
NON BEARING WALLS	0 HR	RATING
FLOOR CONSTRUCTION	0 HR	RATING
ROOF CONSTRUCTION	0 HR	RATING

ALLOWABLE HEIGHT (TABLE 504.3):

B/F-2 OCCUPANCY TYPE IIB NS 55 FEET
ACTUAL HEIGHT = 25'-6"

ALLOWABLE NUMBER OF STORIES (TABLE 504.4):

B OCCUPANCY TYPE IIB NS 3 STORIES
ACTUAL NUMBER OF STORIES = 1 & Mezzanine

ALLOWABLE AREA (TABLE 506.2):

B/F-2 OCCUPANCY TYPE IIB NS 23,000/23,000 S.F.
ACTUAL AREA = 3,438 S.F. 2,252/1,186 S.F.

BUILDING AREA :

PROPOSED BUILDING AREA 3,438 S.F.

PARKING SPACES PROVIDED 36
ACCESSIBLE PARKING SPACES PROVIDED 2

FIRE PROTECTION SYSTEMS:

FIRE EXTINGUISHING SYSTEM: N
STAND/PIPE SYSTEM: N
FIRE ALARM: N

OCCUPANT LOAD CALCULATION (TABLE 1004.1.1):

OCCUPANT CLASS B (150 sq.ft. per person)= 2252 SQ. FT. = 16 PEOPLE
F-2 (200 sq.ft. per person)= 1186 SQ. FT. = 6 PEOPLE
TOTAL = 22 PEOPLE

EGRESS WIDTH (TABLE 1005.1):

CORRIDORS OCCUPANT < OR = 30 36" MIN
OCCUPANT > OR = 30 44" MIN

CORRIDOR DOORS 1.5 INCHES PER OCCUPANT

PLUMBING FIXTURE REQUIREMENTS (TABLE 2902.1):	REQUIRED	PROVIDED (IN BUILDING)
BUILDING TOTAL		
TOTAL PEOPLE = 22 PEOPLE (11 MEN/11 WOMEN)		
DRINKING FOUNTAINS: 1 PER 100	1	2
MALE: WATER CLOSETS REQUIRED: 1 PER 25	1	1
FEMALE:WATER CLOSETS REQUIRED: 1 PER 25	1	1
MALE: LAVATORIES REQUIRED: 1 PER 40	1	1
FEMALE: LAVATORIES REQUIRED: 1 PER 40	1	1
SERVICE SINKS:	1	1

DWA CONSTRUCTION INC.
General Contractor
76 West 2400 North
North Logan, Utah 84341
435-890-2557
jen@dwaconstruct.com

MANSFIELD ARCHITECTURAL SERVICES
445 EAST 275 NORTH
HYDE PARK, UTAH 84318
(435)512-6249
steven.mansfield@usu.edu

Beazer Engineering Inc.
525 East 3700 South
Logan, Utah 84321
435-753-1250
david@beazer-engineering.com

Mortensen Engineering, Inc.
251 South 830 East
Smithfield, Utah 84335
(435) 770-5534

ALLIANCE CONSULTING ENGINEERS
150 EAST 200 NORTH SUITE P
LOGAN, UTAH 84321
(435) 755-5121

SUNRISE ENGINEERING
2100 North Main Street
North Logan, Utah 84341
801-573-0769
sdwood@sunrise-eng.com

ABBREVIATIONS

ABBREVIATIONS

ABBR.	DESCRIPTION	ABBR.	DESCRIPTION
ACC STA	ACCESSIBLE STATION	MECH	MECHANICAL
AC	ACOUSTIC, ACOUSTICAL	MTL	METAL
ADJ	ADJUSTABLE	MIN	MINIMUM
ALT	ALTERNATE	MISC	MISCELLANEOUS
ALUM	ALUMINUM	MT	MOUNT
AB	ANCHOR BOLT	(N)	NEW
ANG	ANGLE	NIC	NOT IN CONTRACT
ASPH	ASPHALT	NTS	NOT TO SCALE
BSMT	BASEMENT	O/C	ON CENTER
BRG	BEARING	OPNG	OPENING
BM	BENCH MARK	OPP	OPPOSITE
BLKG	BLOCKING	OD	OUTSIDE DIAMETER
BD	BOARD	OH	OVERHEAD
B.O.	BOTTOM OF	OF/CI	OWNER FURNISHED/ CONTRACTOR INSTALLED
BLDG	BUILDING	OF/OI	OWNER FURNISHED/ OWNER INSTALLED
B.U.R.	BUILT UP ROOF	PART'N	PARTITION
CLG	CEILING	P-LAM	PLASTIC LAMINATE
CL	CENTER LINE	PL	PLATE
CT	CERAMIC TILE	PLY	PLYWOOD
CB	CHALK BOARD	PREFAB	PREFABRICATED
C	CHANNEL	PROJ	PROJECTION
CO	CLEAN OUT	QT	QUARRY TILE
COL	COLUMN	RAD	RADIUS
CONC	CONCRETE	REF.	REFRIGERATOR
CONN	CONNECTION	REINF	REINFORCED
CONT	CONTINUOUS	REV	REVISION
CONTR	CONTRACTOR	RD	ROUND
DIM	DIMENSION	SCHED	SCHEDULE
DWG	DRAWING	SIM	SIMILAR
EA	EACH	SHT	SHEET
ELECT	ELECTRICAL	SPEC	SPECIFICATION
EWC	ELECTRIC WATER COOLER	SQ	SQUARE
ELEV	ELEVATION	SS	STAINLESS STEEL
EQ	EQUAL	STD	STANDARD
EQUIP	EQUIPMENT	STL	STEEL
EXIST	EXISTING	STOR	STORAGE
(E)	EXISTING	STRUCT	STRUCTURAL
EXP	EXPANSION	SUSP	SUSPENDED, SUSPENSION
EXT	EXTERIOR	SYS	SYSTEM
FIN	FINISH	TB	TACKBOARD
FEC	FIRE EXTINGUISHER CABINET	TEL	TELEPHONE
FLR	FLOOR	TV	TELEVISION
FD	FLOOR DRAIN	TEMP	TEMPORARY
GALV	GALVANIZED	TS	TUBE STEEL
GI	GALVANIZED IRON	THRES	THRESHOLD
GA	GAUGE	TOIL	TOILET
GYP BD	GYPSUM BOARD	T.O.	TOP OF
HDWD	HARD WOOD	T & B	TOP AND BOTTOM
HT	HEIGHT	TYP	TYPICAL
HM	HOLLOW METAL	VERT	VERTICAL
HORIZ	HORIZONTAL	U.N.O.	UNLESS NOTED OTHERWISE
ID	INSIDE DIAMETER	WC	WATER CLOSET
INSUL	INSULATION	WM	WATER METER
INT	INTERIOR	WWF	WELDED WIRE FABRIC
JT	JOINT	W	WIDE FLANGE
MFR	MANUFACTURER	WDO	WINDOW
MB	MARKER BOARD	W/	WITH
MAX	MAXIMUM	W/O	WITHOUT
		WD	WOOD

SYMBOL LEGEND

SYMBOL	DESCRIPTION
A1 / A201	BUILDING SECTION
A1 / A201	SECTION CUT
A1 / A201	DETAIL BUBBLE
A1/A201	INTERIOR ELEVATION
A1 A201	EXTERIOR ELEVATION
1	REVISIONS
SECOND FLOOR 110' - 0"	ELEVATION
201	DOOR NUMBER
10	WINDOW TYPES
1	WALL TYPE
ROOM NAME 201	ROOM TAGS
12 / 6	SLOPE
1	GRID BUBBLE
1 NOTES	KEY NOTES

MATERIALS LEGEND

SYMBOL	DESCRIPTION
	EARTH
	COMPACTED GRANULAR FILL
	FINISHED WOOD
	EXISTING STRUCTURE TO REMAIN
	GYPSUM BOARD
	CONCRETE
	PLYWOOD/OSB
	SHINGLES
	WOOD STUD WALL
	RIDGED INSULATION
	BATT INSULATION
	BRICK/MASONRY
	CONCRETE MASONRY UNIT (CMU)
	PARTICLE BOARD
	CONTINUOUS WOOD
	STEEL

SHEET INDEX

Index of Drawings - Architectural	
Sheet Number	Sheet Name
G100	Cover Sheet
G101	Vicinity Plans
G102	Area & Exit Plans
A100	Footing & Foundation Plan
A101	Main Floor Plan
A102	Mezzanime Floor Plan
A103	Reflected Ceiling Plan
A104	Roof Plan
A200	Elevations
A201	Elevations
A202	Interior Elevations
A300	Building Sections
A301	Building Sections
A302	Wall Sections
A304	Door & Window Schedule
A901	Axons
A902	Axons

Index of Drawings Electrical	
E101	Lighting Plan
E201	Power Plan
E202	Mezzanine Electrical Plan
ES101	Site Electrical Plan
ESP101	Electrical Specifications
ESP102	Electrical Specifications

Index of Drawings Civil	
GN1	Civil Cover Sheet
GN2	General Notes, Legend & Abbreviations
SP1	Site Plan
SP2	Enlarged Plan
SP3	Turn Around Plan
D1	Civil Details
SW1	SWPPP Site Plan
SW2	SWPPP Details

Index of Drawings Mechanical	
M001	Mechanical General Information
M101	Main Floor Mechanical Plan
M102	Mezzanine Mechanical Plan
M200	Mechanical Details & Schedules

Index of Drawings Plumbing	
P001	Plumbing Notes & Specifications
P101	Main Floor Plumbing Plan
P102	Mezzanine Plumbing Plan
P200	Plumbing Details & Schedules

Index of Drawings Structural	
S0.1	Footing & Foundation Specs
S1.0	Footing & Foundation Plan
S1.1	Footing & Foundation Details
S1.2	Footing & Foundation Details
S2.0	CMU Plan

6/19/2024 11:25:12 AM

MANSFIELD ARCHITECTURAL SERVICES
STEVEN R. MANSFIELD ARCHITECT
435-563-2320 - FAX 435-563-1414 mansfield@cc.usu.edu
40 WEST 3600 NORTH, HYDE PARK, UTAH 84318

Hobbled Dog Cidery
OWNERS NAME DWA
PROJECT ADDRESS 625 West 8300 South Paradise, Utah 84328

MARK:	DATE:	DESCRIPTION:
1	Date 1	Revision 1

PROJECT #: 325
DESIGNED BY: srm
DRAWN BY: srm
CHECKED BY: srm
ISSUED : 5/2/2024

STATE OF UTAH
STEVEN R. MANSFIELD
134922
10/19/20213
LICENSED ARCHITECT

Cover Sheet

G100

NW/4 Section 28, Township 10 North, Range 1 East

Scale 1"= 200 Feet

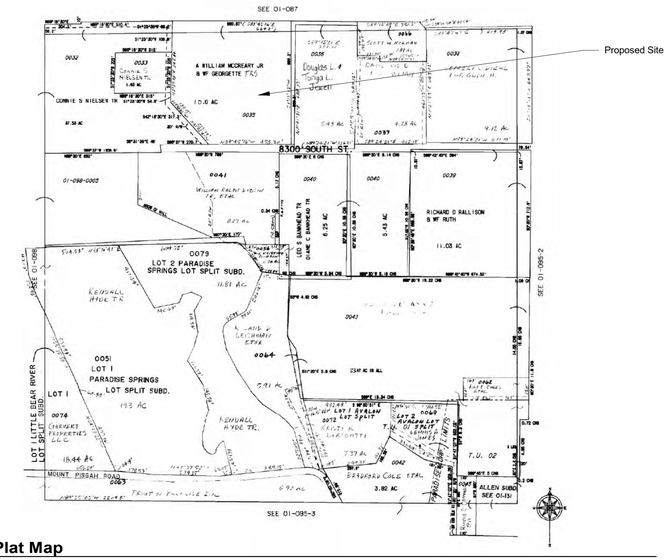

3 **Plat Map**
G101

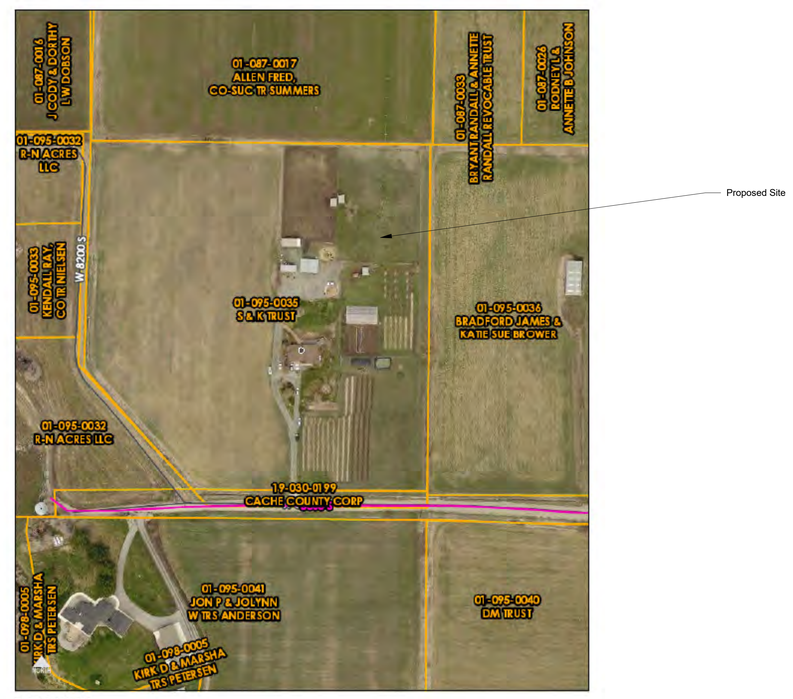

Date: 5/29/2024

2 **Vicinity Map**
G101

6/19/2024 11:25:16 AM

MAS
MANSFIELD ARCHITECTURAL SERVICES
STEVEN R. MANSFIELD ARCHITECT
435-563-2320 - FAX 435-563-4414 mansfield@cc.usu.edu
40 WEST 3800 NORTH, HYDE PARK, UTAH 84318

Hobbled Dog Cidery

OWNERS NAME DWA
PROJECT ADDRESS 791 South 100 West
Smithfield, Utah
625 West 8300 South, Paradise, Utah 84328

MARK:	DATE:	DESCRIPTION:

PROJECT #: 325
DESIGNED BY: Designer
DRAWN BY: Author
CHECKED BY: Checker
ISSUED : 5/2/2024

STATE OF UTAH
STEVEN MANSFIELD
Steven R Mansfield
134922
2/23/2021
LICENSED ARCHITECT

Vicinity Plans

G101

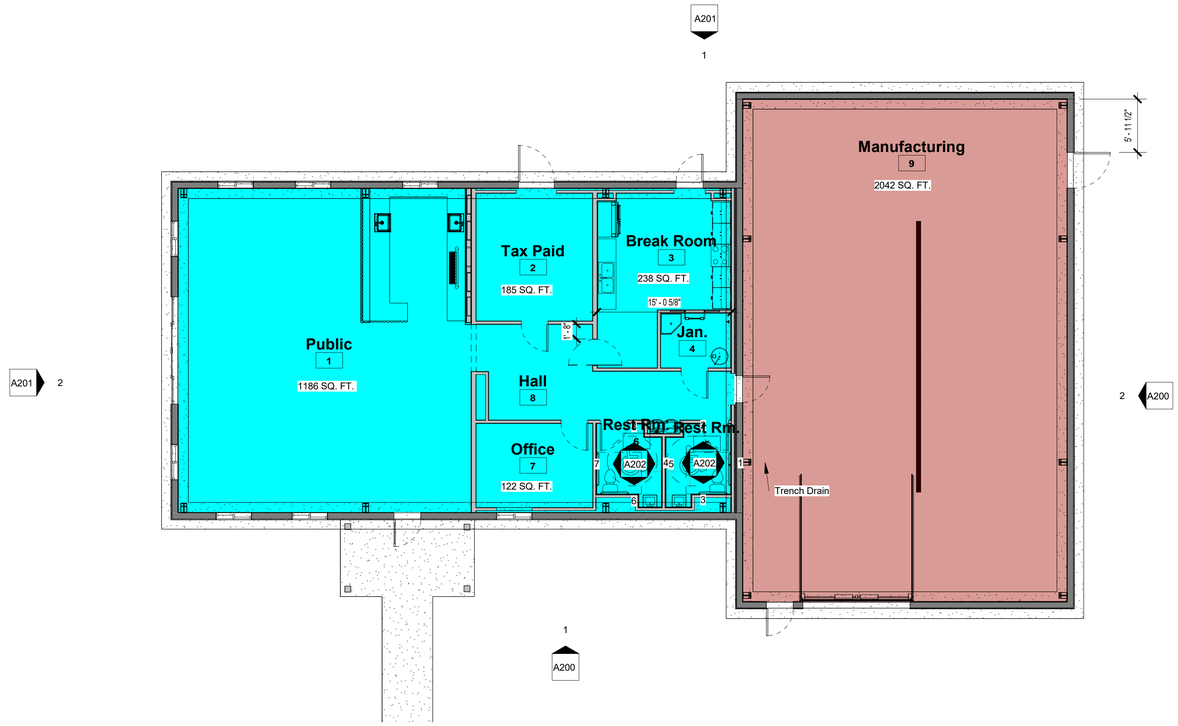

1 **Main Floor Area Plan**
G102 1/8" = 1'-0"

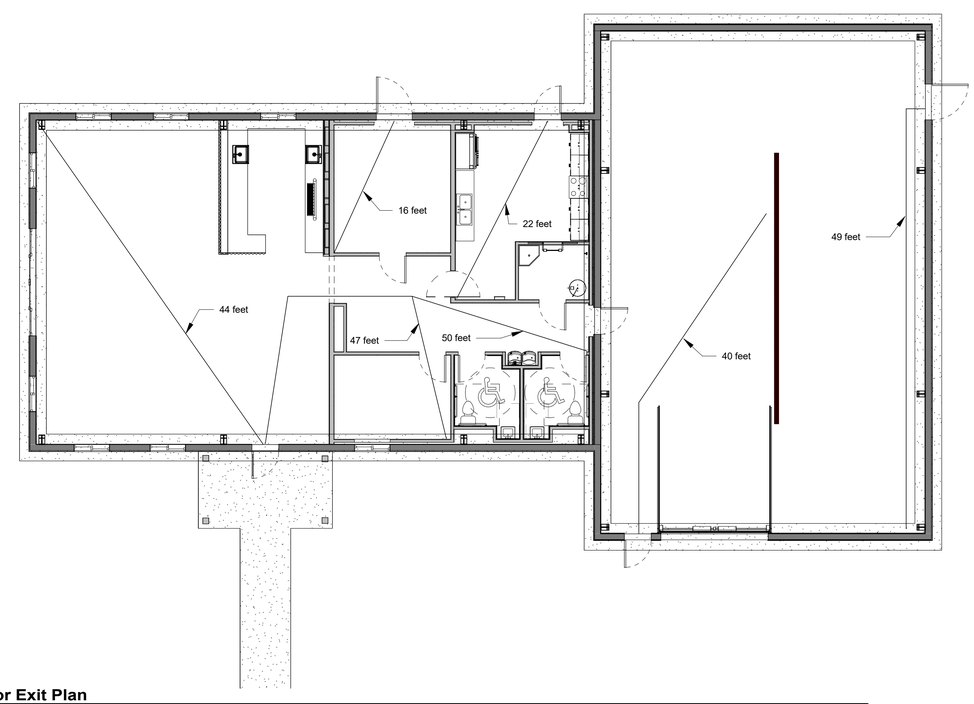

2 **Main Floor Exit Plan**
G102 1/8" = 1'-0"

6/19/2024 11:25:37 AM

MASFIELD ARCHITECTURAL SERVICES
STEVEN R. MANSFIELD ARCHITECT
435-563-2320 - FAX 435-563-1414 mansfield@cc.usu.edu
40 WEST 3800 NORTH, HYDE PARK, UTAH 84318

Hobbled Dog Cidery

OWNERS NAME DWA
PROJECT ADDRESS
625 West 8300 South, Paradise, Utah 84328

MARK:	DATE:	DESCRIPTION:

PROJECT #: 325
DESIGNED BY: Designer
DRAWN BY: Author
CHECKED BY: Checker
ISSUED : 5/2/2024

STATE OF UTAH
STEVEN R. MANSFIELD
Steven R. Mansfield
134922
LICENSED ARCHITECT

Area & Exit Plans

G102

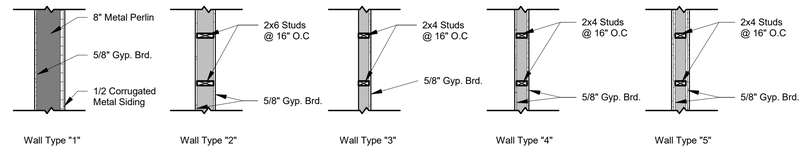

Wall Type "1" Wall Type "2" Wall Type "3" Wall Type "4" Wall Type "5"

2 Hour Rated Wall - UL U301
(2) Layers 5/8" Sheetrock Brand Gypsum Panels, Firecode Core or Sheetrock Brand Gypsum Panels, Water Resistant, Firecode Core, On each side. 2x4 Studs @16" O.C. Base layer attach w/ 1-7/8" nails 6" O.C. Face layer attach w/ 2-3/8" nails 8" O.C.

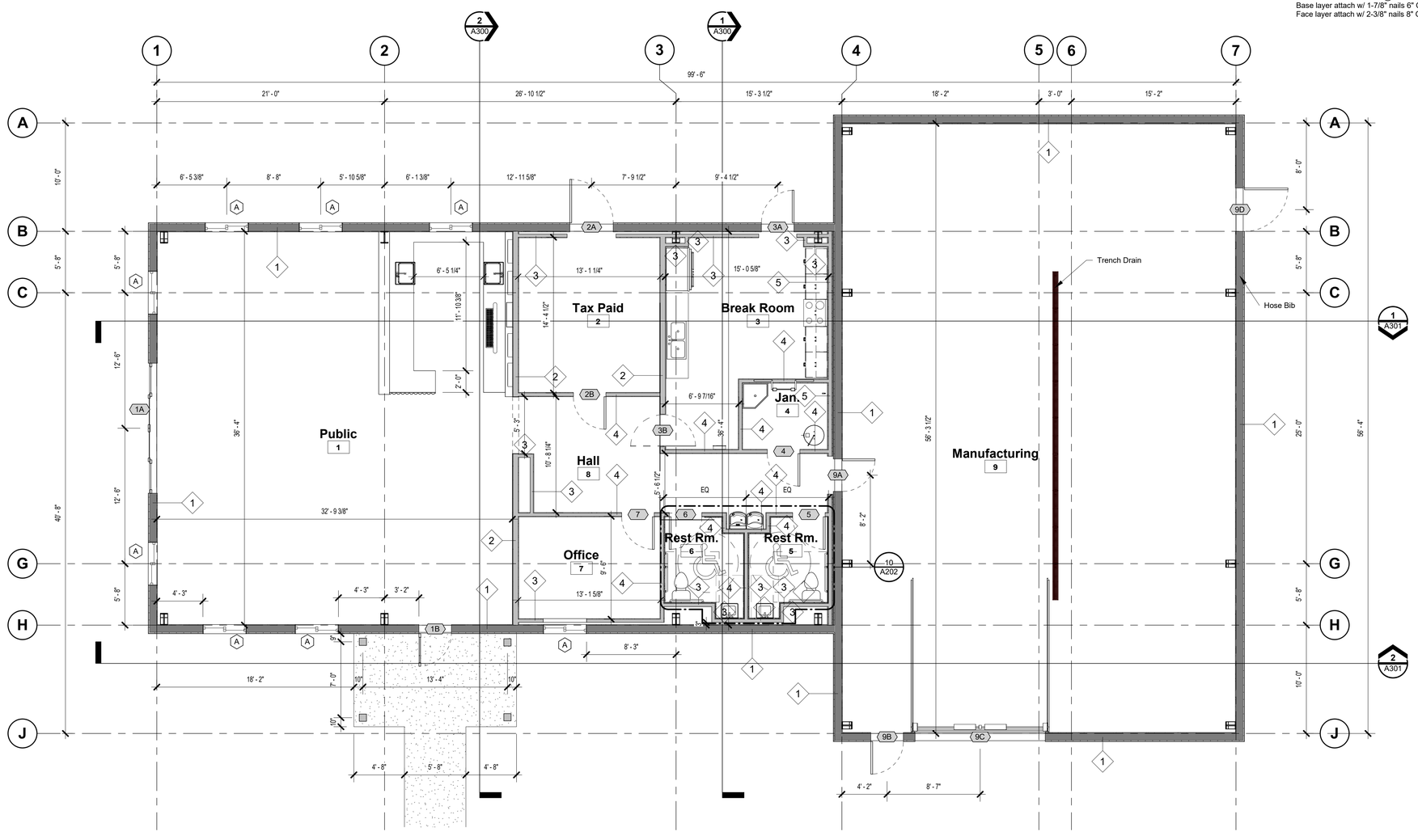

1 **Main Floor Plan**
A101 3/16" = 1'-0"

6/19/2024 11:21:34 AM

STEVEN R. MANSFIELD ARCHITECT
435-563-2320 - FAX: 435-563-1414 mansfield@ccnet.usu.edu
40 WEST 3800 NORTH, HYDE PARK, UTAH 84318

Hobbled Dog Cidery

OWNERS NAME DWA
PROJECT ADDRESS 625 West 8300 South
Paradise, Utah 84328
625 West 8300 South, Paradise, Utah 84328

MARK:	DATE:	DESCRIPTION:

PROJECT #: 325
DESIGNED BY: Designer
DRAWN BY: Author
CHECKED BY: Checker
ISSUED : 5/2/2024

STATE OF UTAH
STEVEN R. MANSFIELD
134922
5/2/2024
LICENSED ARCHITECT

Main Floor Plan

A101

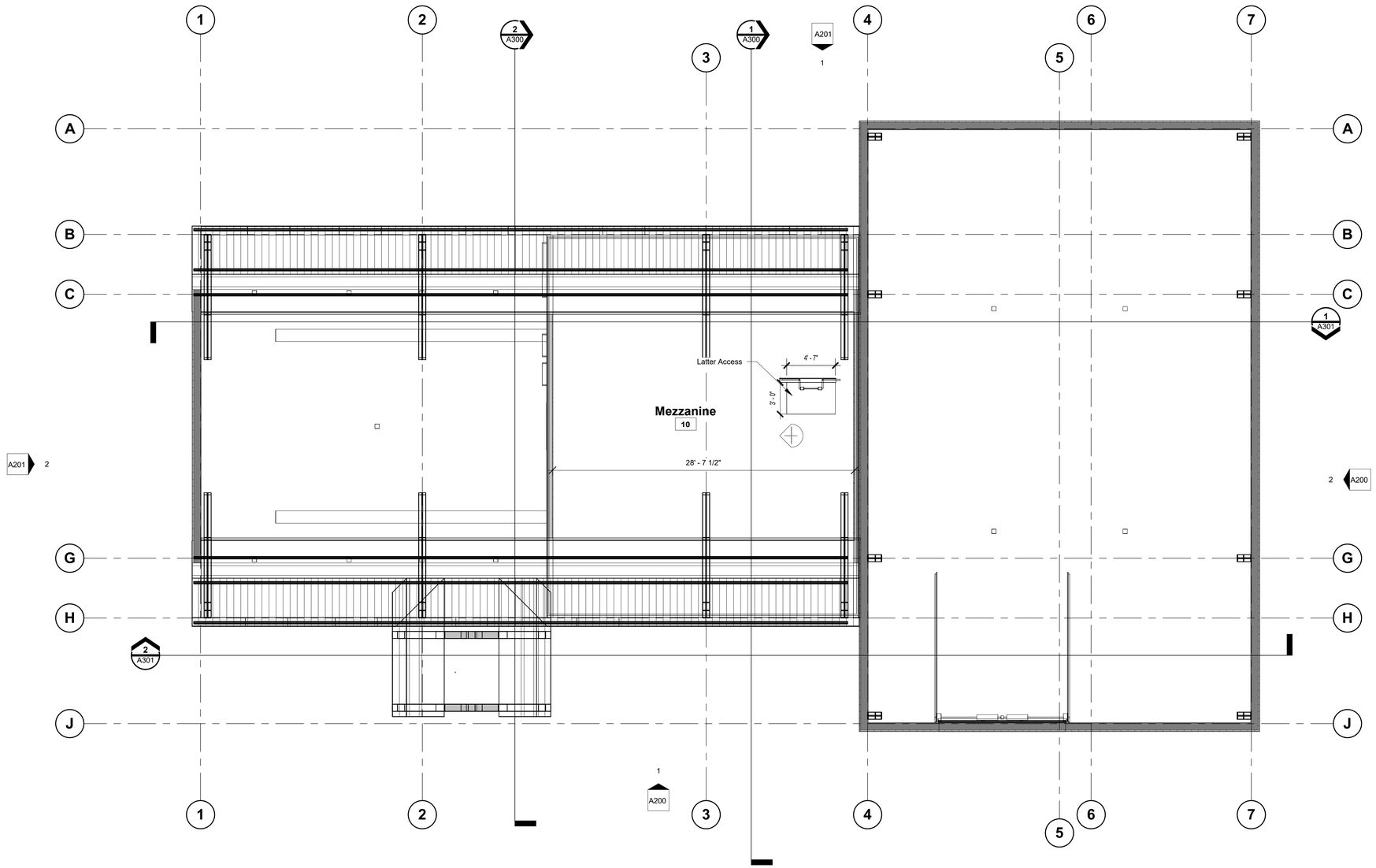

1 A102 **Mezzanine**
3/16" = 1'-0"

6/19/2024 11:21:39 AM

MANSFIELD ARCHITECTURAL SERVICES
STEVEN R. MANSFIELD ARCHITECT
435-563-2320 - FAX 435-563-1414 mansfield@ccnet.com
40 WEST 3800 NORTH, HYDE PARK, UTAH 84318

Hobbled Dog Cidery

OWNERS NAME DWA
PROJECT ADDRESS
625 West 8300 South, Paradise, Utah 84328

MARK:	DATE:	DESCRIPTION:

PROJECT #: 325
DESIGNED BY: Designer
DRAWN BY: Author
CHECKED BY: Checker
ISSUED : 5/2/2024

STATE OF UTAH
STEVEN R. MANSFIELD
Steven R. Mansfield
134922
5/2/2024
LICENSED ARCHITECT

Mezzanime Floor Plan

A102

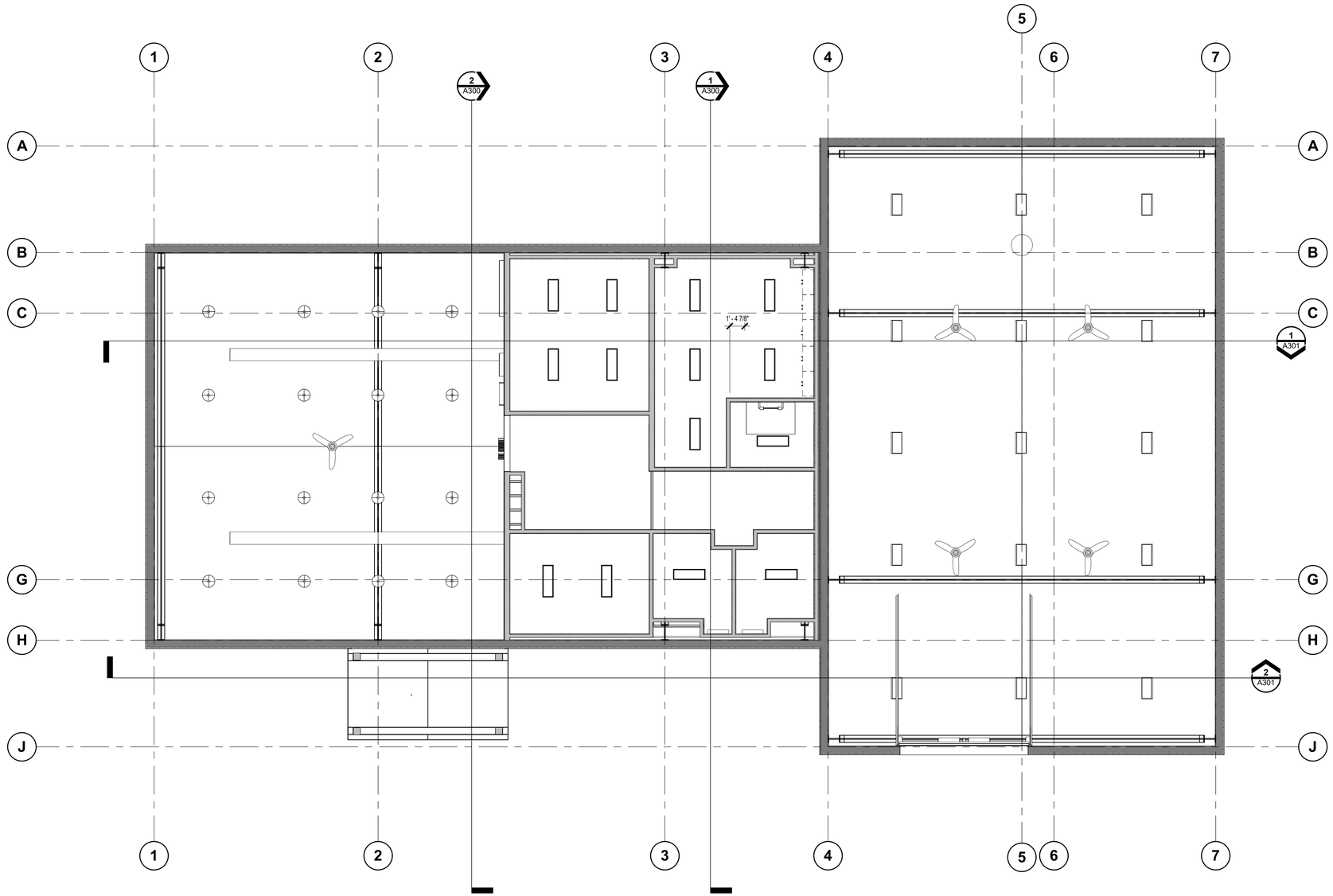

1 **Reflected Ceiling Plan**
A103 3/16" = 1'-0"

6/19/2024 11:21:51 AM

MANSFIELD ARCHITECTURAL SERVICES
STEVEN R. MANSFIELD ARCHITECT
435-563-2320 - FAX 435-563-1414 msfarch@cvcuss.edu
40 WEST 3800 NORTH, HYDE PARK, UTAH 84318

Hobbled Dog Cidery

OWNERS NAME DWA
PROJECT ADDRESS
625 West 8300 South, Paradise, Utah 84328

MARK:	DATE:	DESCRIPTION:

PROJECT #: 325
DESIGNED BY: Designer
DRAWN BY: Author
CHECKED BY: Checker
ISSUED : 5/2/2024

STATE OF UTAH
STEVEN R. MANSFIELD
134922
5/2/2024
LICENSED ARCHITECT

Reflected Ceiling Plan

A103

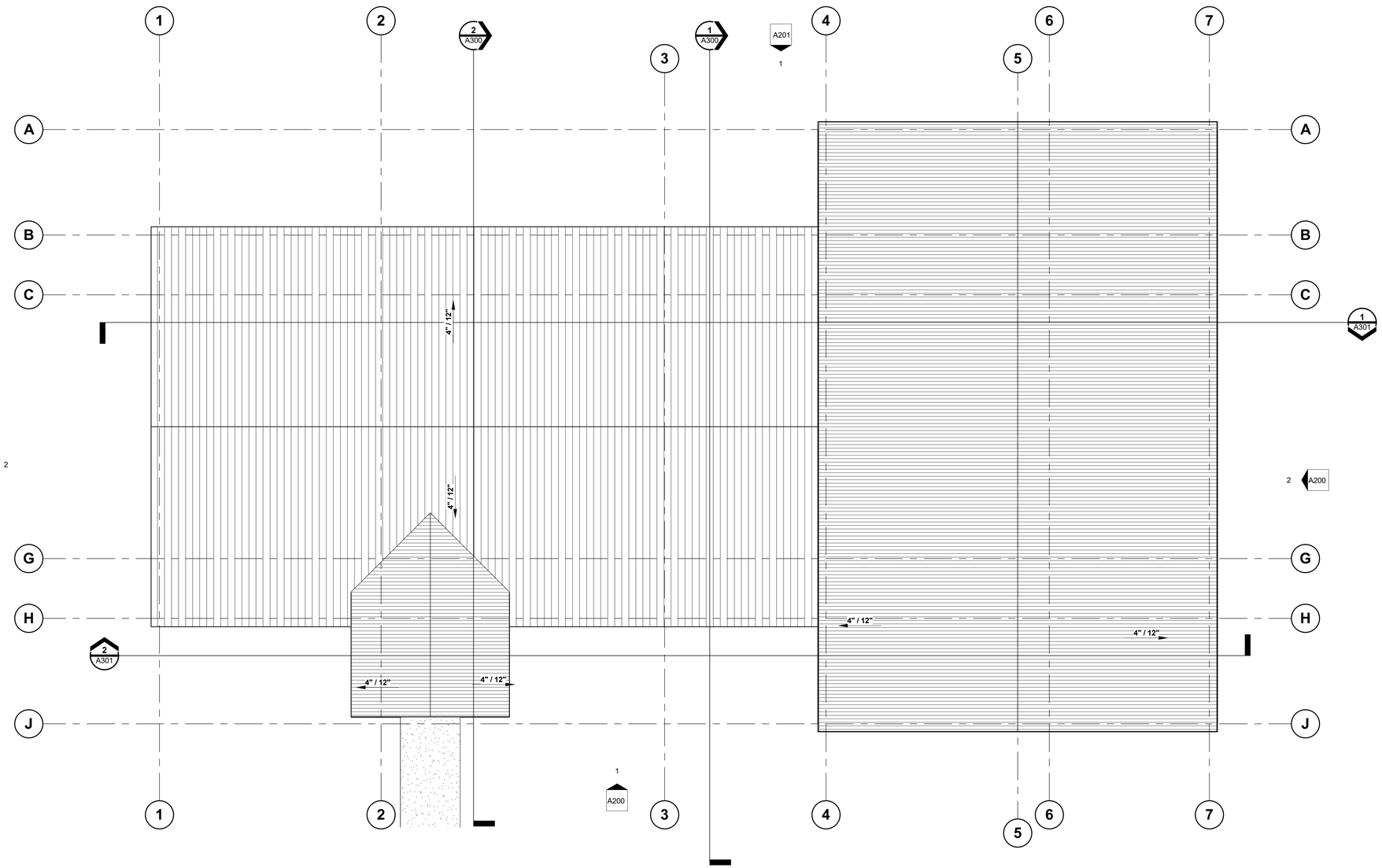

1 Roof Plan
A104 3/16" = 1'-0"

MANSFIELD ARCHITECTURAL SERVICES
STEVEN R. MANSFIELD ARCHITECT
435-563-2320 - FAX 435-563-1414 mansfield@ccnet.com
40 WEST 3800 NORTH, HYDE PARK, UTAH 84318

Hobbled Dog Cidery

OWNERS NAME DWA
PROJECT ADDRESS
625 West 8300 South, Paradise, Utah 84328

MARK:	DATE:	DESCRIPTION:

PROJECT #: 325
DESIGNED BY: Designer
DRAWN BY: Author
CHECKED BY: Checker
ISSUED: 5/2/2024

STATE OF UTAH
STEVEN R. MANSFIELD
134922
5/2/2024
LICENSED ARCHITECT

Roof Plan

A104

6/19/2024 11:21:56 AM

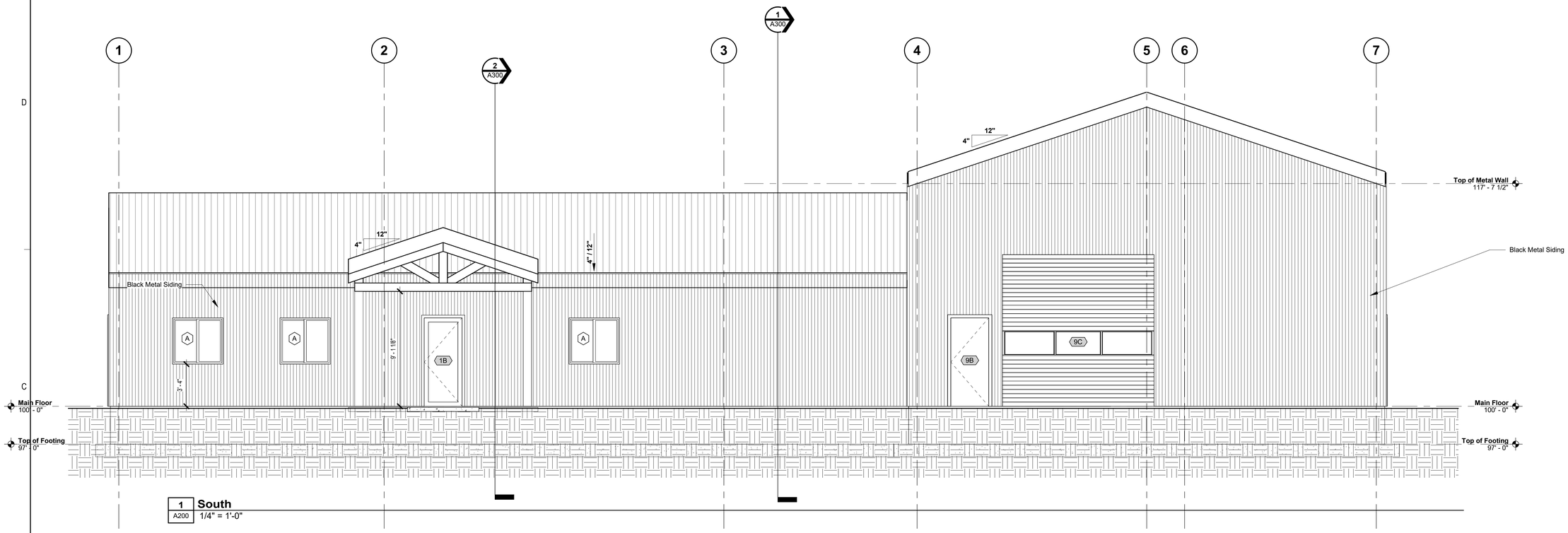

1 South
A200 1/4" = 1'-0"

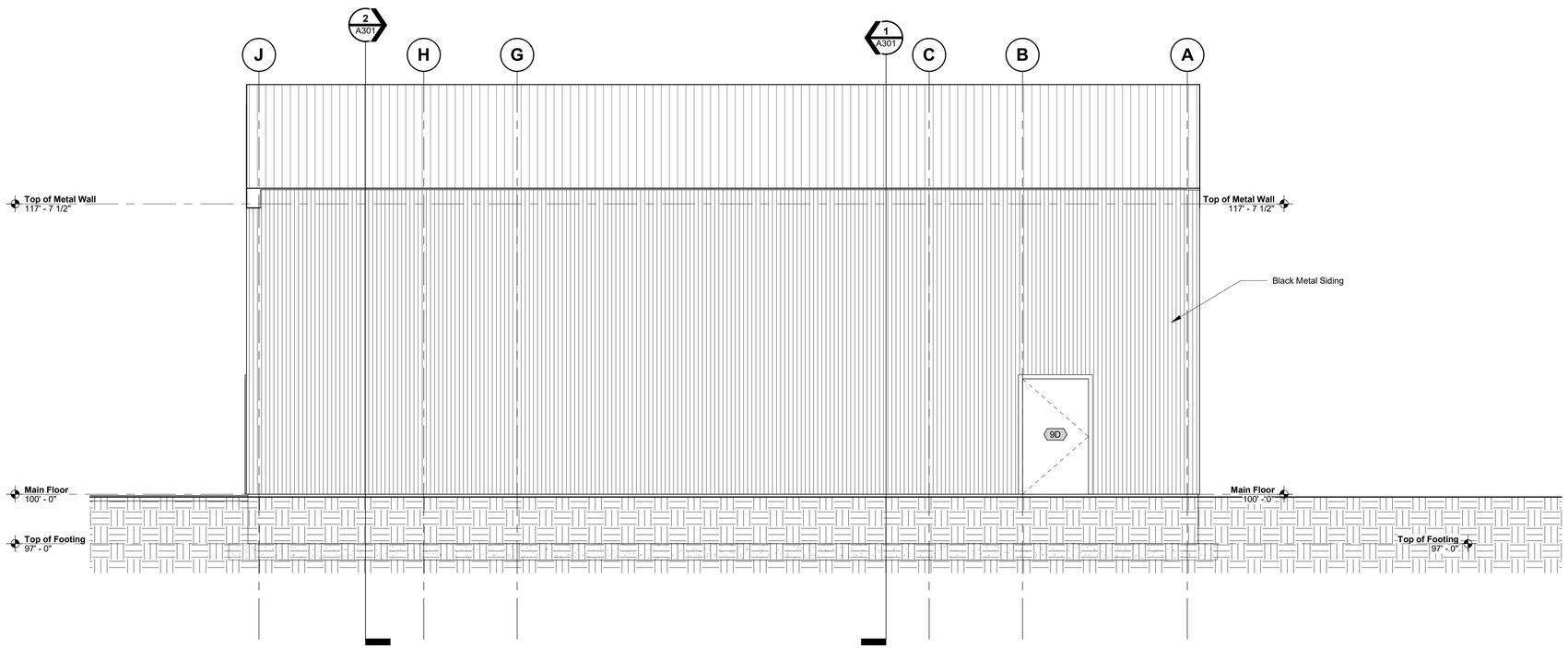

2 East
A200 1/4" = 1'-0"

6/19/2024 11:22:08 AM

MANSFIELD ARCHITECTURAL SERVICES
STEVEN R. MANSFIELD ARCHITECT
435-563-2320 - FAX 435-563-1414 mansfield@cc.usu.edu
40 WEST 3800 NORTH | HYDE PARK, UTAH 84318

Hobbled Dog Cidery

OWNERS NAME DWA
PROJECT ADDRESS 625 West 8300 South
Paradise, Utah 84328

625 West 8300 South, Paradise, Utah 84328

MARK:	DATE:	DESCRIPTION:

PROJECT #: 325
DESIGNED BY: Designer
DRAWN BY: Author
CHECKED BY: Checker
ISSUED: 5/2/2024

STATE OF UTAH
STEVEN R. MANSFIELD
134922
5/2/2024
LICENSED ARCHITECT

Elevations

A200

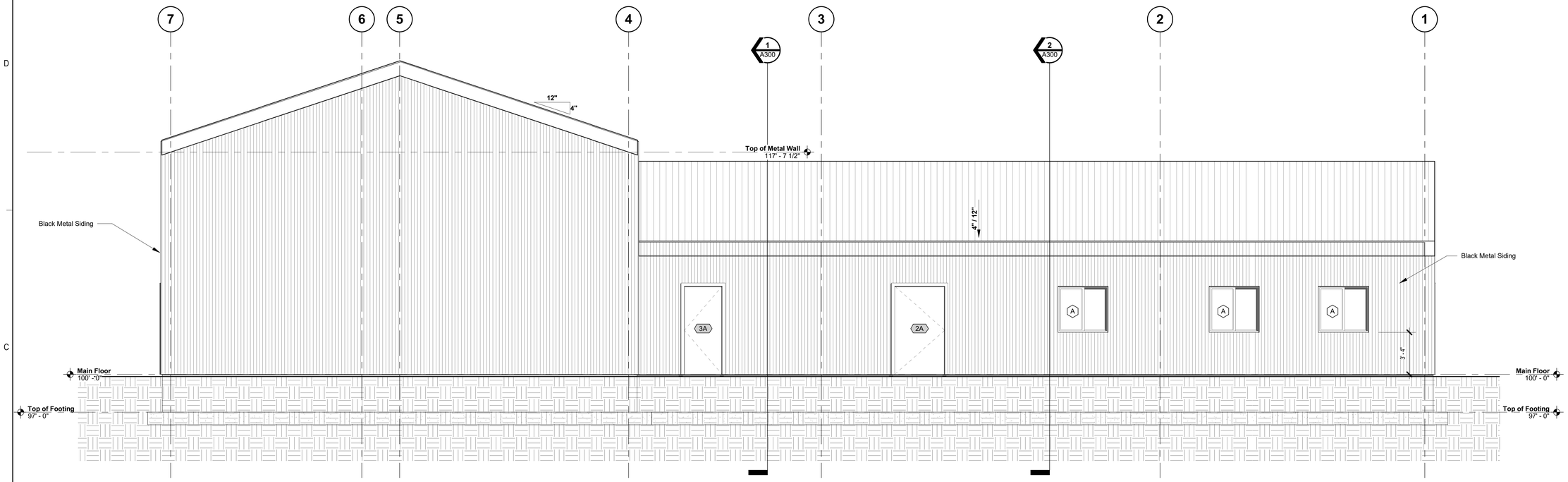

1 North
A201 1/4" = 1'-0"

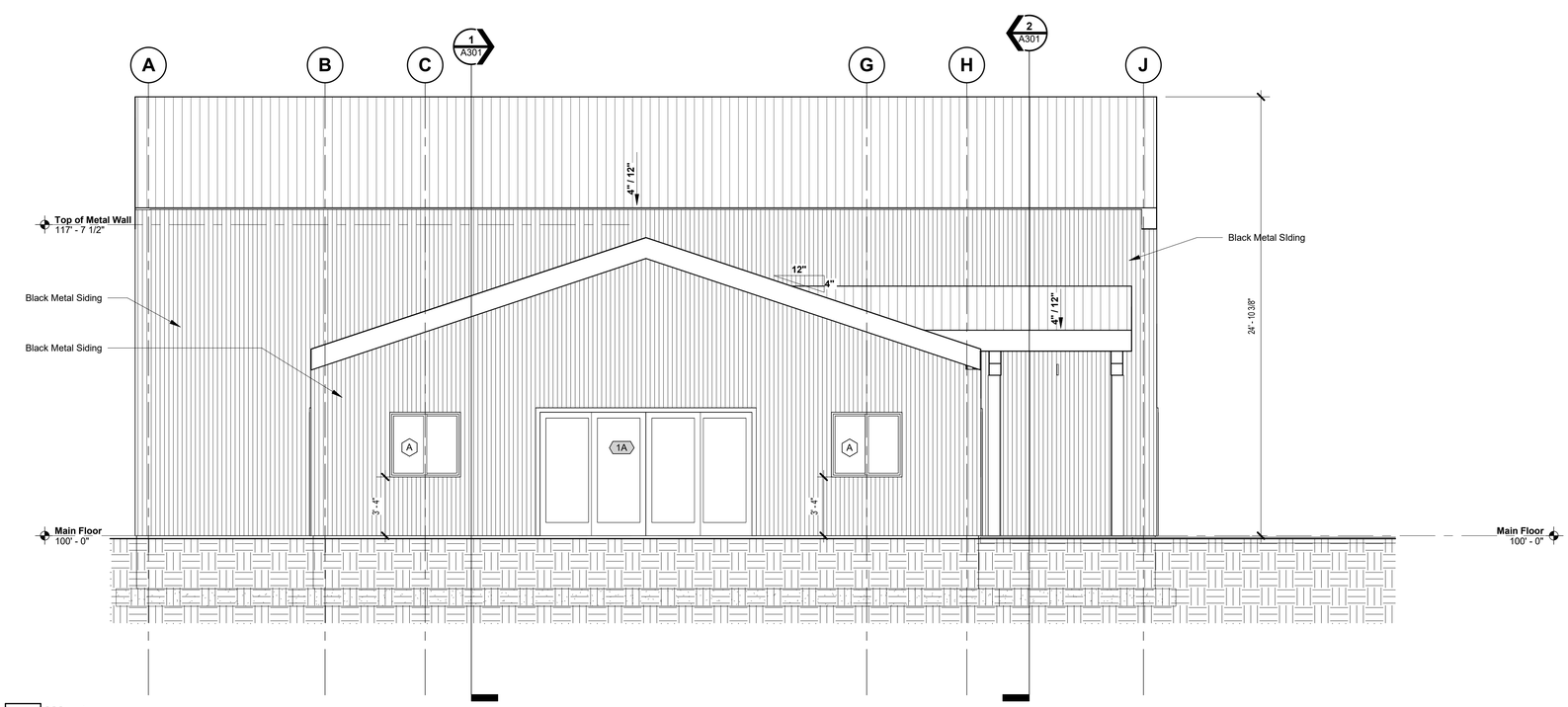

2 West
A201 1/4" = 1'-0"

6/19/2024 11:22:26 AM

MANSFIELD ARCHITECTURAL SERVICES
STEVEN R. MANSFIELD ARCHITECT
435-563-2320 - FAX 435-563-1414 mansfield@cc.usu.edu
40 WEST 3800 NORTH, HYDE PARK, UTAH 84318

Hobbled Dog Cidery

OWNERS NAME DWA
PROJECT ADDRESS
625 West 8300 South, Paradise, Utah 84328

MARK:	DATE:	DESCRIPTION:

PROJECT #: 325
DESIGNED BY: Designer
DRAWN BY: Author
CHECKED BY: Checker
ISSUED : 5/2/2024

STATE OF UTAH
STEVEN R. MANSFIELD
Steven R. Mansfield
134922
5/2/2024
LICENSED ARCHITECT

Elevations

A201

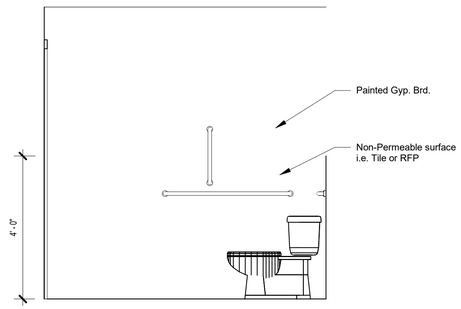

For ADA Mounting Heights Refer to

1 A202 **Elevation 1 - a**
1/2" = 1'-0"

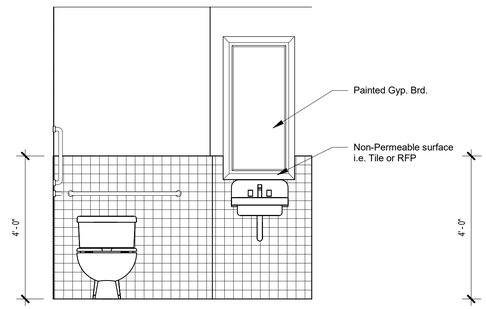

For ADA Mounting Heights Refer to

3 A202 **Elevation 1 - b**
1/2" = 1'-0"

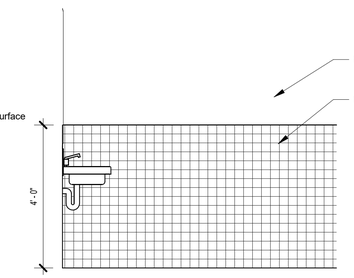

For ADA Mounting Heights Refer to

4 A202 **Elevation 1 - c**
1/2" = 1'-0"

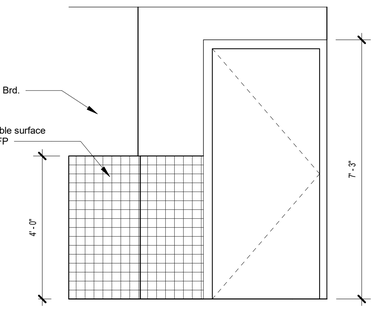

For ADA Mounting Heights Refer to

2 A202 **Elevation 1 - d**
1/2" = 1'-0"

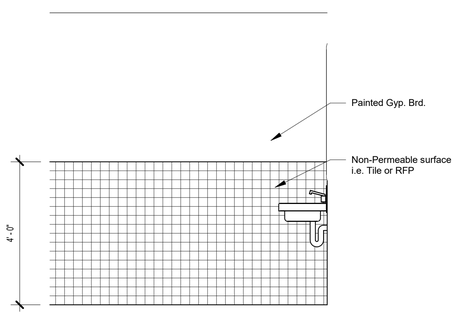

For ADA Mounting Heights Refer to

5 A202 **Elevation 2 - a**
1/2" = 1'-0"

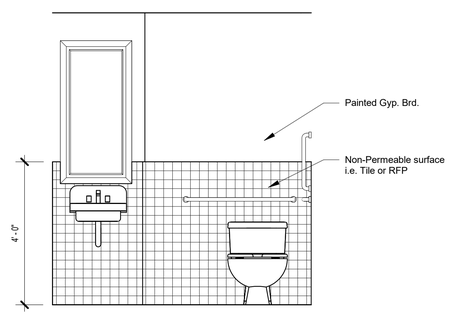

For ADA Mounting Heights Refer to

6 A202 **Elevation 2 - b**
1/2" = 1'-0"

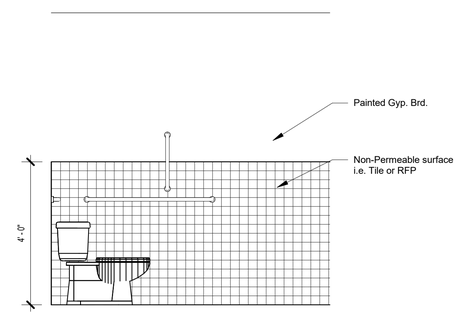

For ADA Mounting Heights Refer to

7 A202 **Elevation 2 - c**
1/2" = 1'-0"

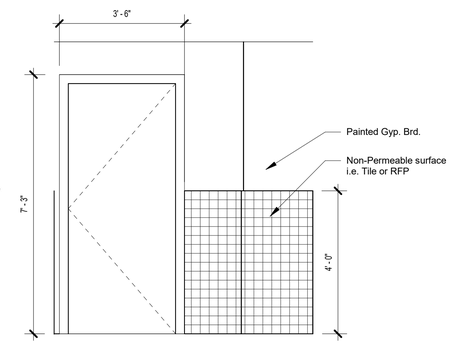

For ADA Mounting Heights Refer to

8 A202 **Elevation 2 - d**

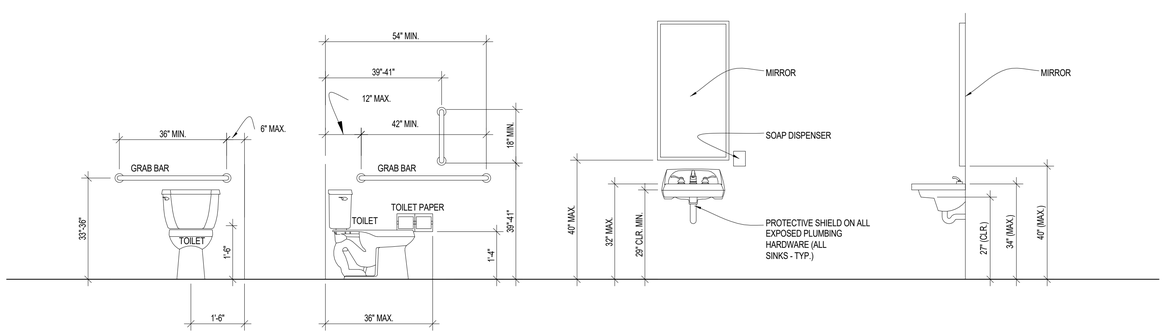

9 A202 **ADA Mounting Heights**
1/2" = 1'-0"

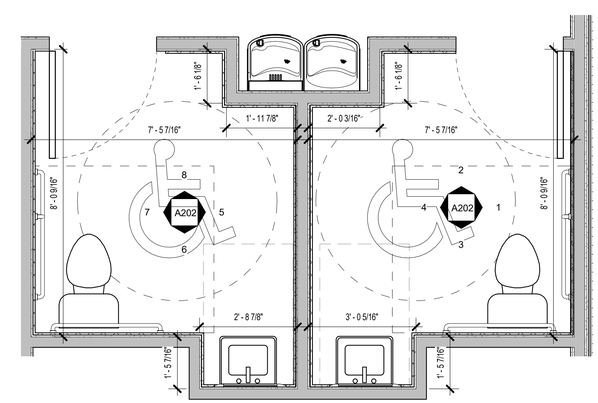

10 A202 **Enlarged Restrooms**
1/2" = 1'-0"

6/19/2024 11:22:32 AM

MANSFIELD ARCHITECTURAL SERVICES
STEVEN R. MANSFIELD ARCHITECT
435-563-2330 - FAX: 435-563-1414 mansfield@ccnet.com
40 WEST 3800 NORTH | HYDE PARK, UTAH 84318

Hobbled Dog Cidery

OWNERS NAME DWA
PROJECT ADDRESS 625 West 8300 South, Paradise, Utah 84328

MARK:	DATE:	DESCRIPTION:

PROJECT #: 325
DESIGNED BY: Designer
DRAWN BY: Author
CHECKED BY: Checker
ISSUED : 5/2/2024

STATE OF UTAH
STEVEN R. MANSFIELD
134922
LICENSED ARCHITECT

Interior Elevations

A202

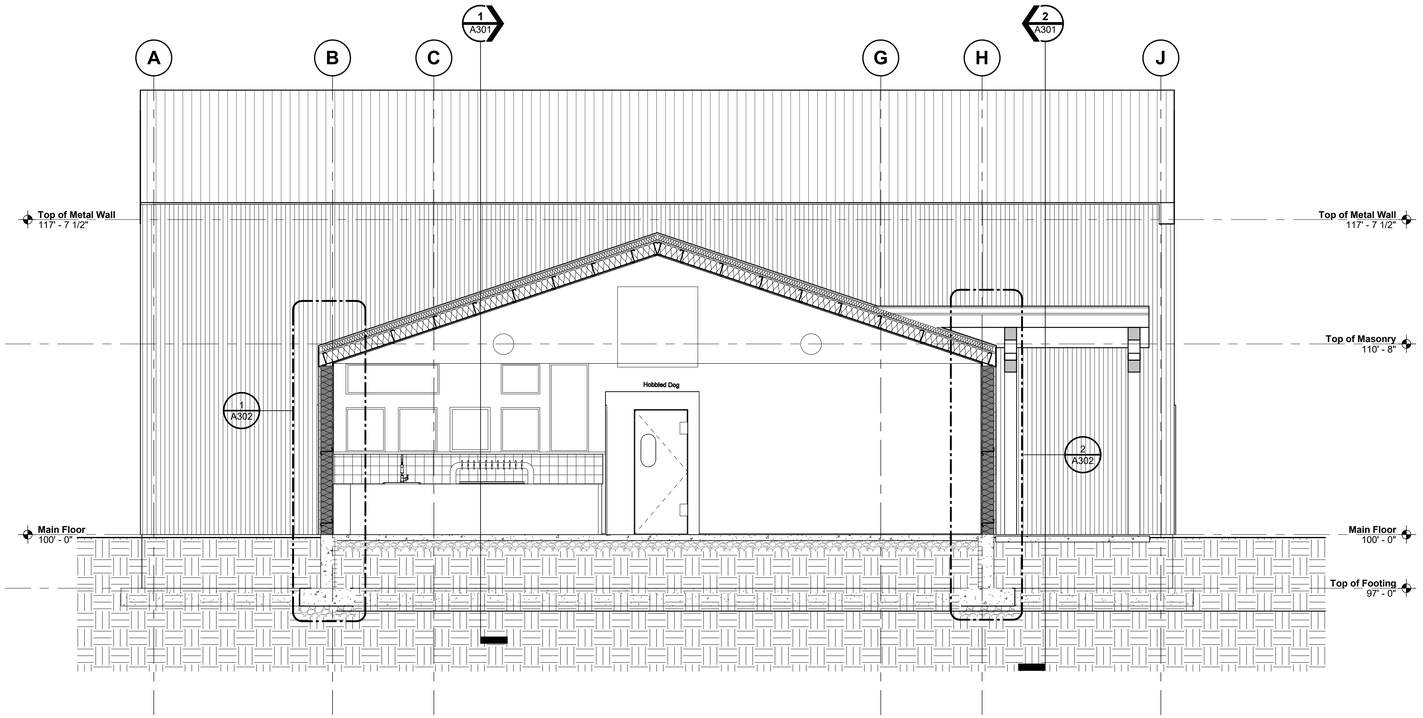

2 Section B
A300 1/4" = 1'-0"

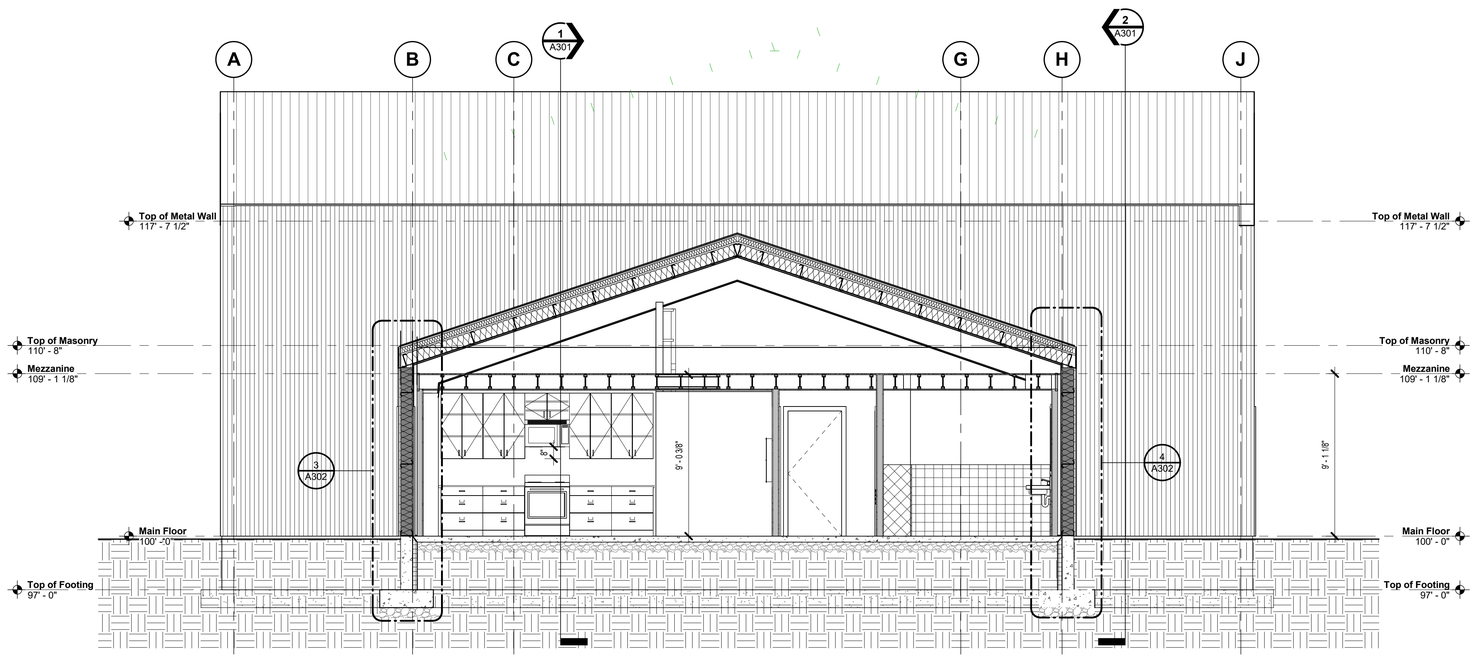

1 Section A
A300 1/4" = 1'-0"

6/19/2024 11:22:47 AM

MANSFIELD ARCHITECTURAL SERVICES
STEVEN R. MANSFIELD ARCHITECT
435-563-2320 - FAX 435-563-1414 mansfield@cc.usu.edu
40 WEST 3800 NORTH, HYDE PARK, UTAH 84318

Hobbled Dog Cidery

OWNERS NAME DWA
PROJECT ADDRESS
625 West 8300 South, Paradise, Utah 84328

MARK:	DATE:	DESCRIPTION:

PROJECT #: 325
DESIGNED BY: Designer
DRAWN BY: Author
CHECKED BY: Checker
ISSUED : 5/2/2024

STATE OF UTAH
STEVEN R. MANSFIELD
134922
5/2/2024
LICENSED ARCHITECT

Building Sections

A300

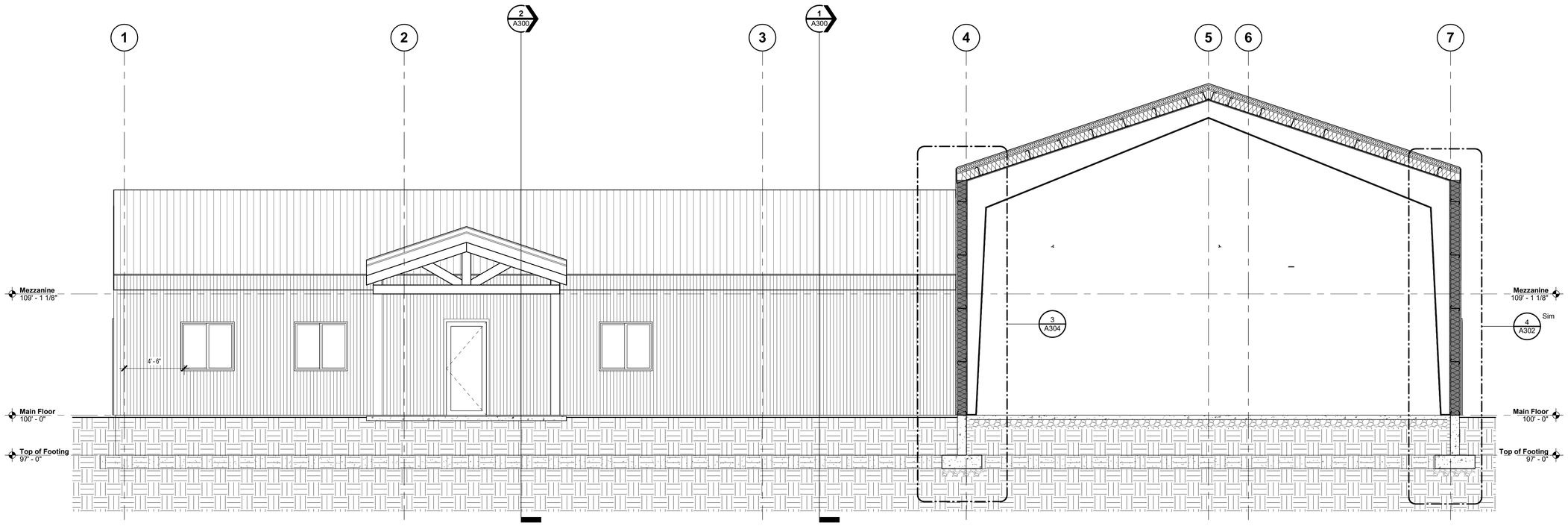

2 A301 **Section D**
1/4" = 1'-0"

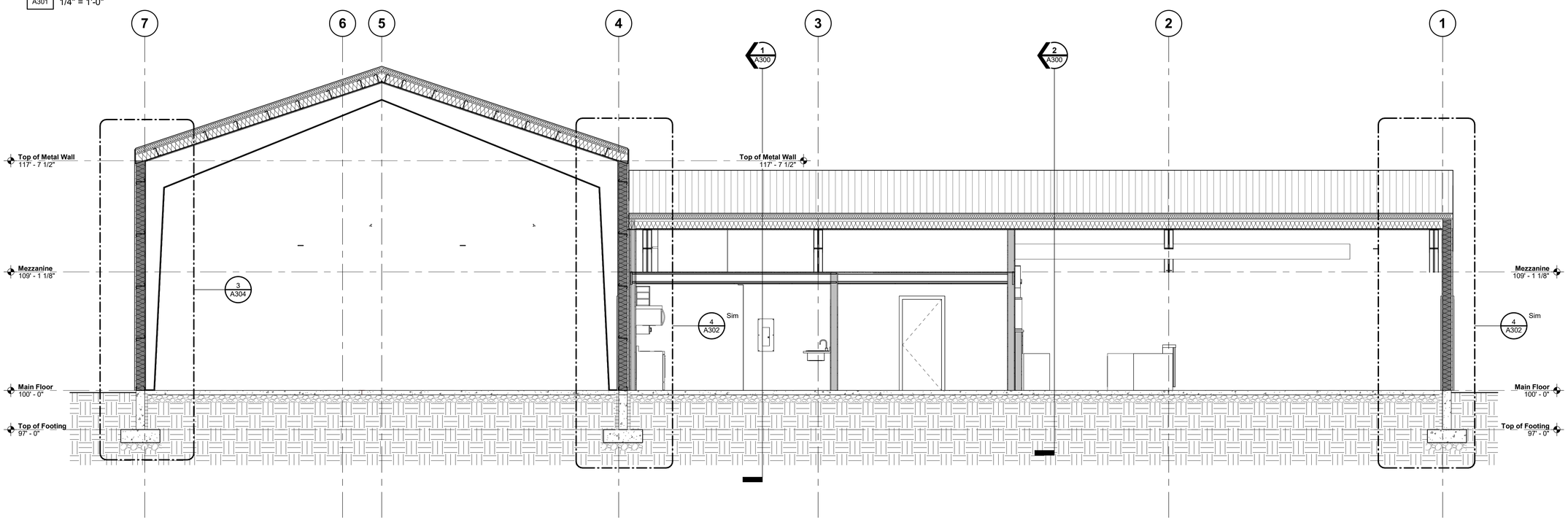

1 A301 **Section C**
1/4" = 1'-0"

6/19/2024 11:23:02 AM

MANSFIELD ARCHITECTURAL SERVICES
STEVEN R. MANSFIELD ARCHITECT
435-563-2320 - FAX 435-563-1414 mansfield@cc.usu.edu
40 WEST 3800 NORTH, HYDE PARK, UTAH 84318

Hobbled Dog Cidery

OWNERS NAME DWA
PROJECT ADDRESS 625 West 8300 South, Paradise, Utah 84328

MARK:	DATE:	DESCRIPTION:

PROJECT #: 325
DESIGNED BY: Designer
DRAWN BY: Author
CHECKED BY: Checker
ISSUED : 5/2/2024

STATE OF UTAH
STEVEN R. MANSFIELD
134922
LICENSED ARCHITECT

Building Sections

A301

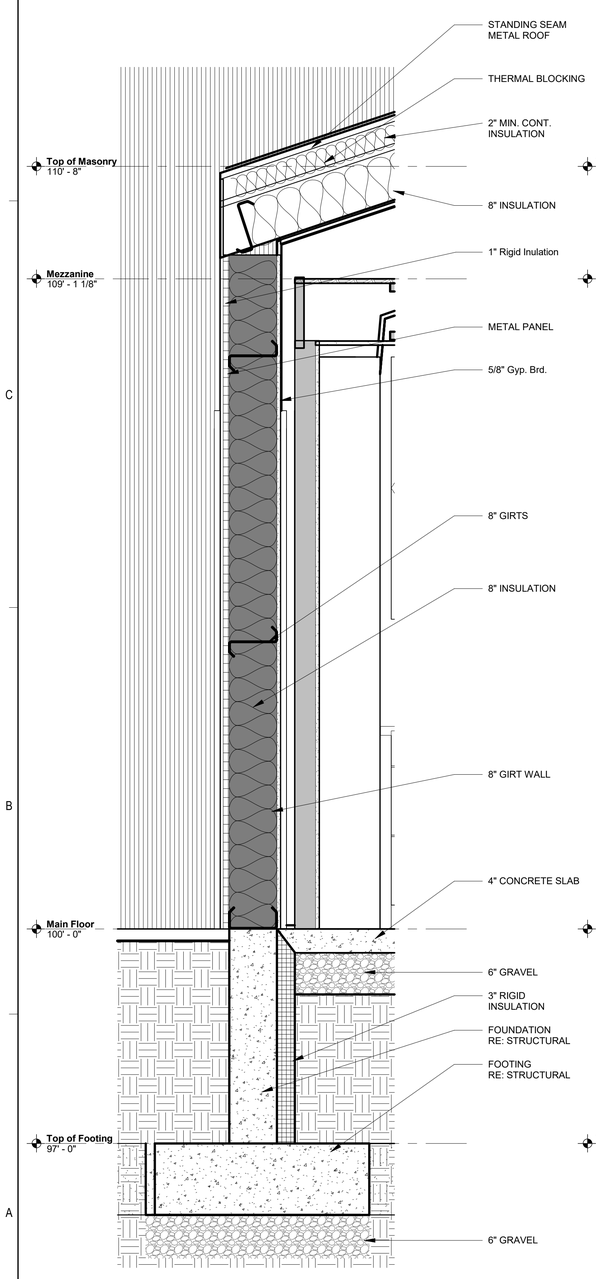

3 A302 **Section A - Callout 1**
1" = 1'-0"

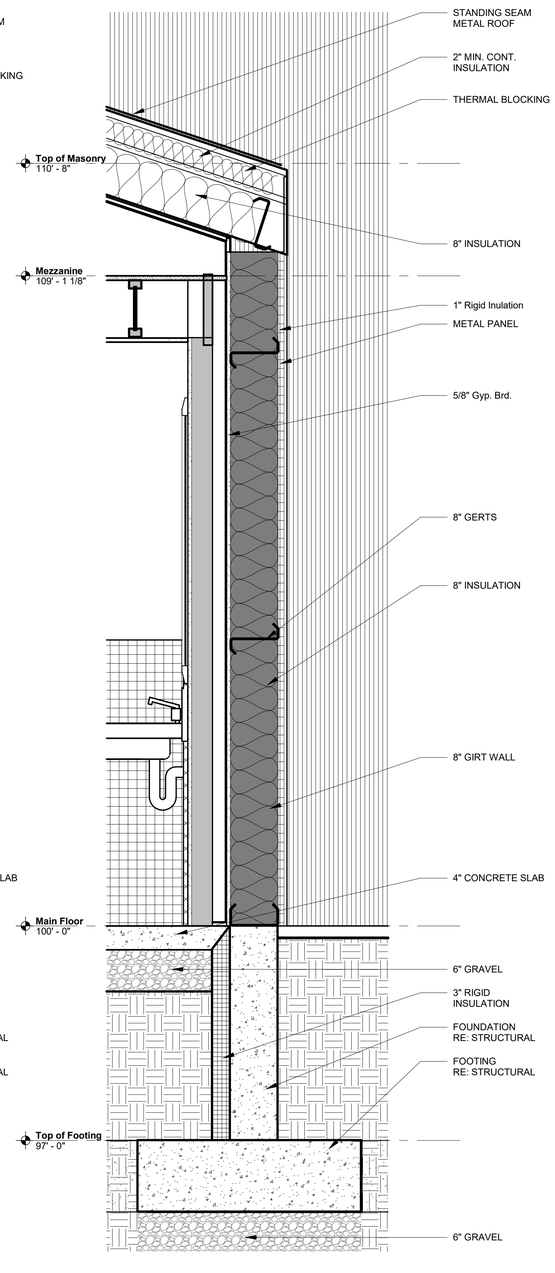

4 A302 **Section A - Callout 2**
1" = 1'-0"

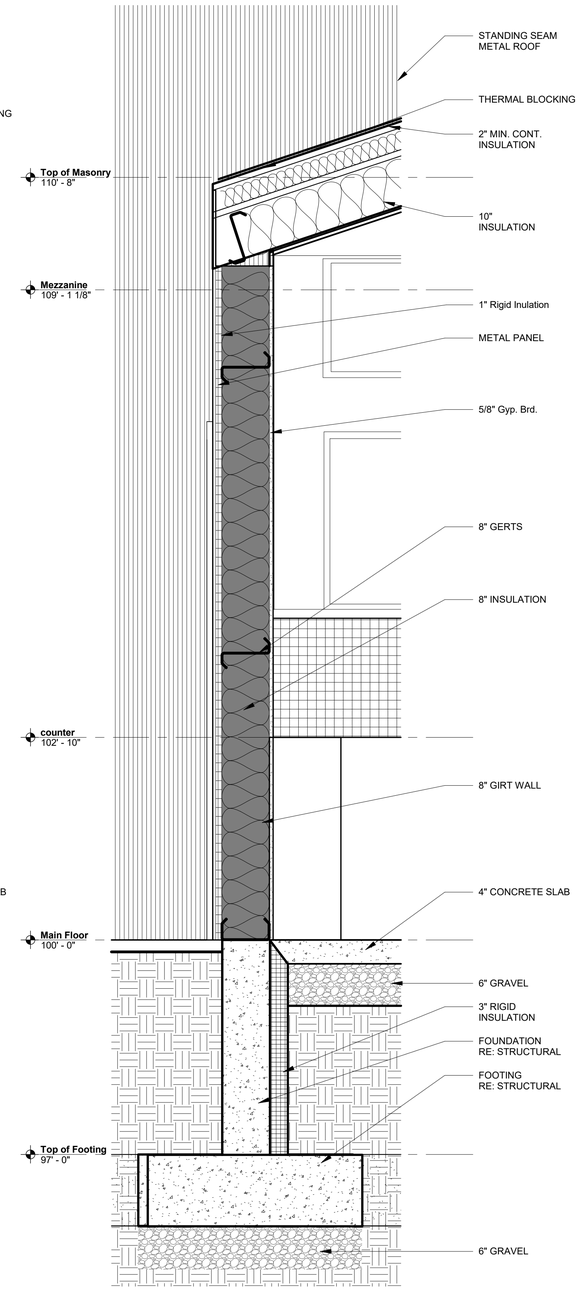

1 A302 **Section B - Callout 1**
1" = 1'-0"

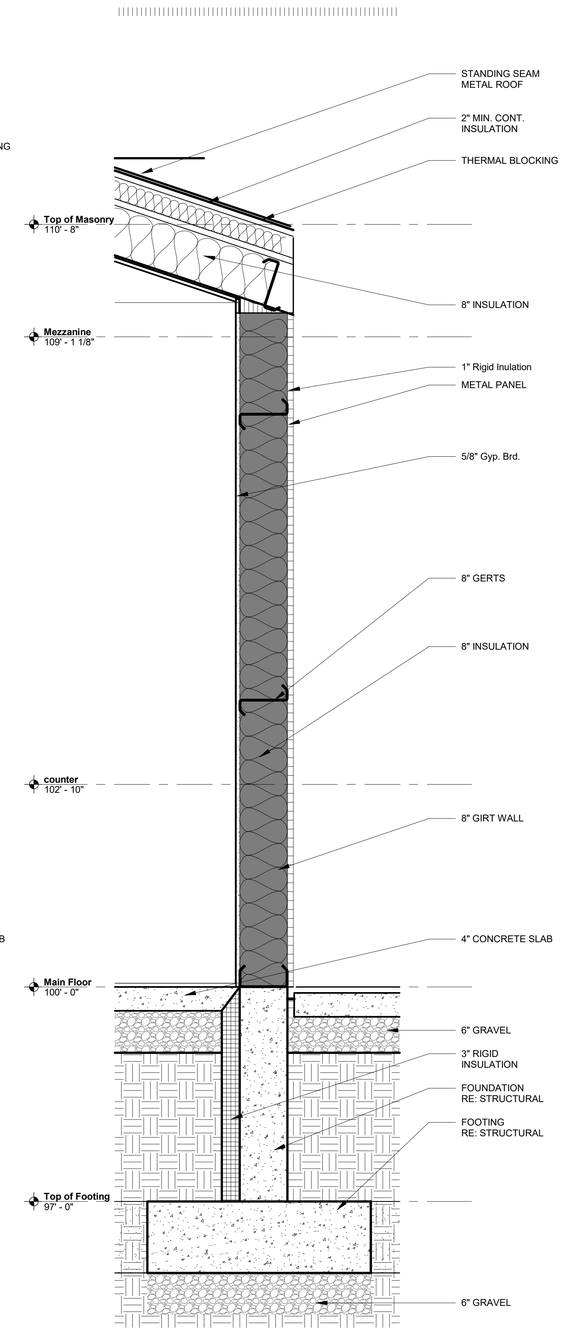

2 A302 **Section B - Callout 2**
1" = 1'-0"

6/19/2024 11:23:09 AM

MANSFIELD ARCHITECTURAL SERVICES
STEVEN R. MANSFIELD ARCHITECT
435-563-2320 - FAX 435-563-1414 mansfield@ccnet.com
40 WEST 3800 NORTH, HYDE PARK, UTAH 84318

Hobbled Dog Cidery

OWNERS NAME DWA
PROJECT ADDRESS 625 West 8300 South, Paradise, Utah 84328

MARK:	DATE:	DESCRIPTION:

PROJECT #: 325
DESIGNED BY: Designer
DRAWN BY: Author
CHECKED BY: Checker
ISSUED : 5/2/2024

STATE OF UTAH
STEVEN R. MANSFIELD
134922
5/2/2024
LICENSED ARCHITECT

Wall Sections

A302

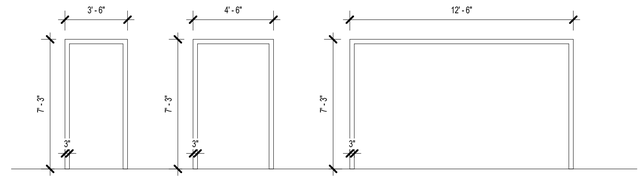

Frame Types
1/4" = 1'-0"

Door Schedule					
Num	Size: Door Size	Size: Thickness	Jamb Detail	Hardware Group	Comments
1A	144"X84"	2"	1/A304		
1B	36"X84"	2"	1/A304		
2A	48"X84"	2"	1/A304		
2B	36"X84"	2"	3/A304		
3A	36"X84"	2"	1/A304		
3B	36"X84"		3/A304		
4	36"X84"	2"	3/A304		
5	36"X84"	2"	3/A304		
6	36"X84"	2"	3/A304		
7	36"X84"	2"	3/A304		
9A		2"	3/A304		90 Min. Fire Rated Door
9B	36"X84"	2"	1/A304		
9C	144"X144"	1 3/8"	2/A304		
9D	48"X84"	2"	1/A304		

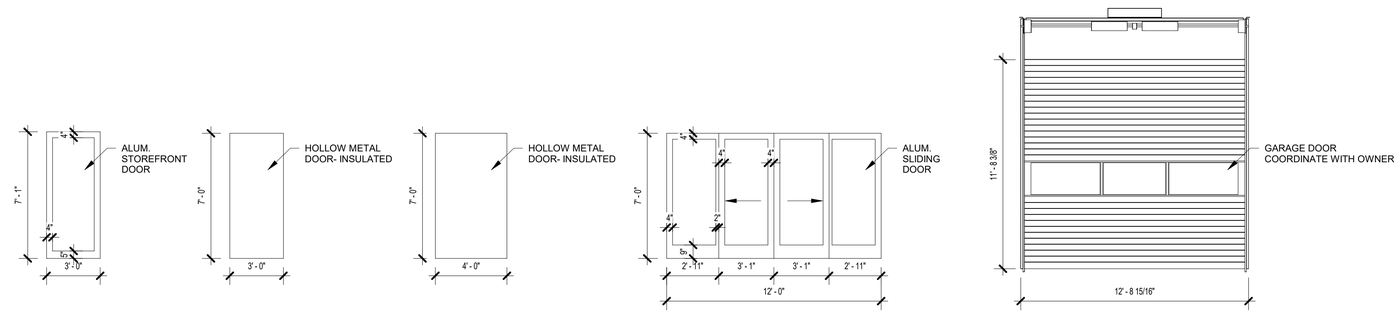

Door Types
1/4" = 1'-0"

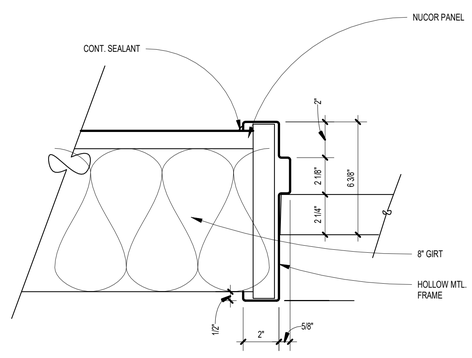

1 Exterior Metal Building Door Jamb
A304 3" = 1'-0"

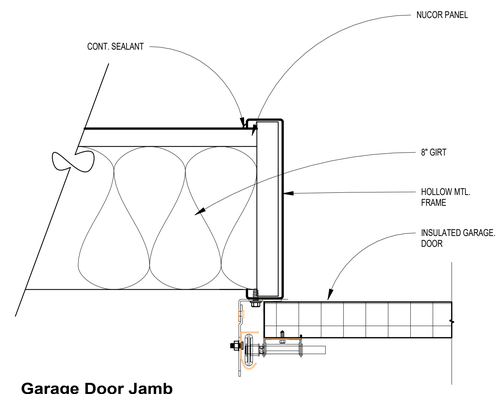

2 Garage Door Jamb Detail
A304 3" = 1'-0"

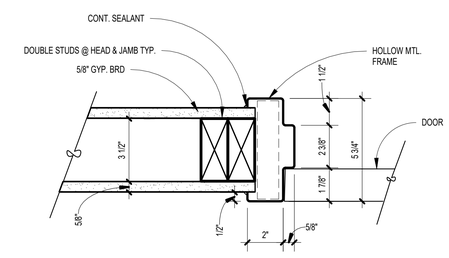

3 Door Jamb Detail
A304 3" = 1'-0"

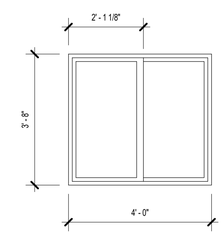

Window A
1/2" = 1'-0"

6/19/2024 11:23:18 AM

MASFIELD ARCHITECTURAL SERVICES
STEVEN R. MANSFIELD ARCHITECT
435-563-2320 - FAX 435-563-1414 mansfield@cc.usu.edu
40 WEST 3800 NORTH HYDE PARK, UTAH 84318

Hobbled Dog Cidery

OWNERS NAME DWA
PROJECT ADDRESS 625 West 8300 South, Paradise, Utah 84328

MARK:	DATE:	DESCRIPTION:

PROJECT #: 325
DESIGNED BY: Designer
DRAWN BY: Author
CHECKED BY: Checker
ISSUED : 5/2/2024

STATE OF UTAH
STEVEN R. MANSFIELD
134922
LICENSED ARCHITECT

Door & Window Schedule

A304

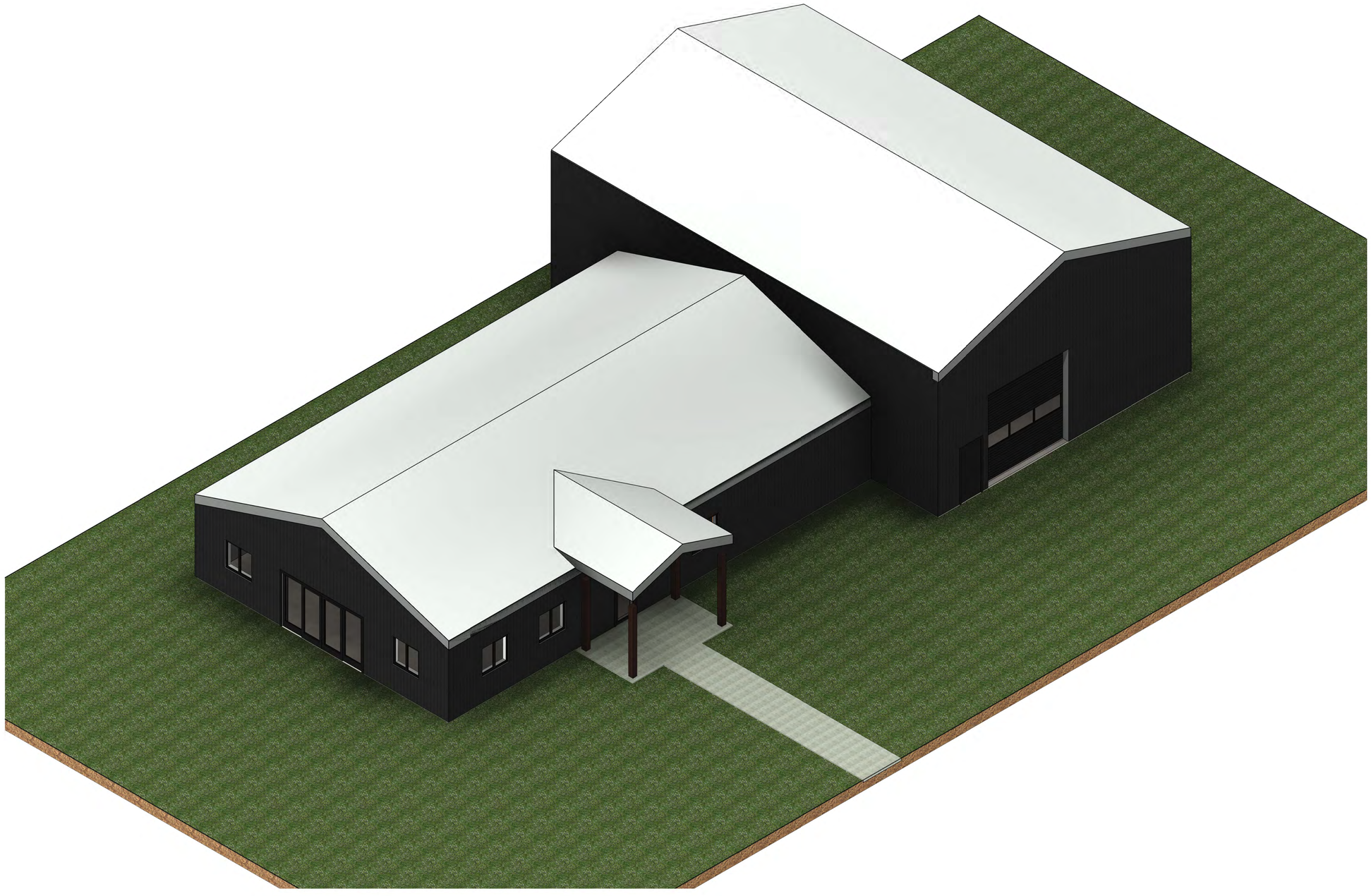

4 **Axon**
A901

MANSFIELD ARCHITECTURAL SERVICES
STEVEN R. MANSFIELD ARCHITECT
435-563-2320 - FAX 435-563-1414 mansfield@cc.usu.edu
40 WEST 3800 NORTH, HYDE PARK, UTAH 84318

Hobbled Dog Cidery

OWNERS NAME DWA
PROJECT ADDRESS 625 West 8300 South, Paradise, Utah 84328

MARK:	DATE:	DESCRIPTION:

PROJECT #: 325
DESIGNED BY: Designer
DRAWN BY: Author
CHECKED BY: Checker
ISSUED : 5/2/2024

STATE OF UTAH
STEVEN R. MANSFIELD
134922
5/2/2024
LICENSED ARCHITECT

Axons

A901

6/19/2024 11:24:05 AM

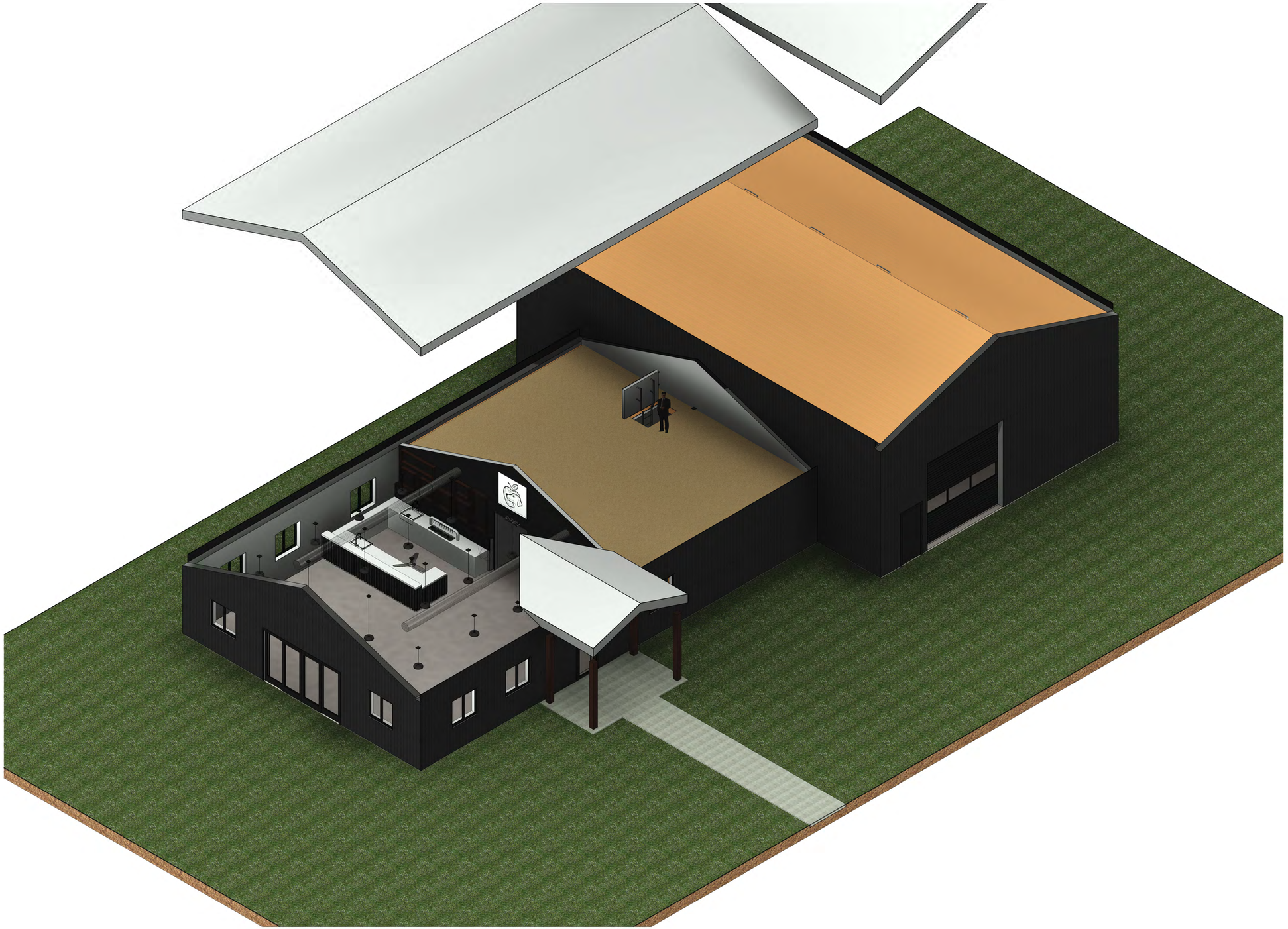

1 A902 **Exploded Axon**

MANSFIELD ARCHITECTURAL SERVICES
STEVEN R. MANSFIELD ARCHITECT
435-563-2320 - FAX 435-563-1414 mansfield@cc.usu.edu
40 WEST 3600 NORTH, HYDE PARK, UTAH 84318

Hobbled Dog Cidery

OWNERS NAME DWA
PROJECT ADDRESS
625 West 8300 South, Paradise, Utah 84328

MARK:	DATE:	DESCRIPTION:

PROJECT #: 325
DESIGNED BY: Designer
DRAWN BY: Author
CHECKED BY: Checker
ISSUED: 5/2/2024

STATE OF UTAH
STEVEN R. MANSFIELD
Steven R. Mansfield
134922
5/2/2024
LICENSED ARCHITECT

Axons

A902

6/19/2024 11:24:46 AM

SECTION 26 0001 – ELECTRICAL GENERAL PROVISIONS
PART 1 – GENERAL
1.1 RELATED DOCUMENTS
A. The general provisions of the Contract, including the Conditions of The Contract (General, Supplementary and other conditions) and Division One apply to the work specified in this Section.
B. This Section 260001 is a part of all other Sections of this Division 26.
C. It is understood that Division 26 shall govern and be the direct responsibility of the Electrical Contractor, who shall comply with the specifications and the accompanying drawings to describe and provide for the furnishings, delivering, installing, testing and placing in satisfactory and successful operation all equipment, materials, devices, and necessary appurtenances to provide a complete electrical system for lighting, power and auxiliaries; together with such other equipment and devices furnished and installed under other contracts which shall be wired and connected under this contract.
D. If a discrepancy occurs between the equipment supplied and the intent or function of the equipment, catalog numbers, discontinued products, drawings, specifications, etc., the Contractor shall bring this to the attention of the Architect or Engineer in writing prior to bidding. Failure to report any conflict does not relieve the Contractor from meeting the intent of the contract documents nor shall it change the contract cost. It shall further be understood that if the contractor is unable to interpret any part of the plans and specifications, or should he find discrepancies therein, he shall call attention of the fact to the Architect prior to bid date. The Architect will issue additional instructions to Bidders before the project is bid.
E. State Licensed Contractor – All contractors shall have a current state contracting license for the trade engaged in.
1.2 DESCRIPTION OF WORK
F. The work covered by these specifications consists of furnishing all labor, materials, equipment, supervision and service necessary for the proper completion of all electrical work shown on the drawings and hereinafter specified. Items shown or described in either the drawings or specifications and/or all items necessary to make the electrical system complete and workable shall be understood to form a part of the work.
G. The main items of work are enumerated below. The work shall include but is not necessarily limited to the following items:
1. Lighting, convenience and power outlets.
2. Light fixtures, lamps and associated equipment.
3. Power service and distribution.
4. Connection of motors, appliances and owner–furnished equipment.
5. Connections to equipment not supplied in this contract.
H. Work and materials not included under this Division:
6. Supply of heating and ventilation control equipment unless noted on the electrical drawings. See mechanical drawings for division 26 requirements.
1.3 VISITING SITE
J. Visit the site during the bidding period to determine existing conditions that will affect the electrical and other work as it pertains to the construction of this structure. All costs arising from site conditions and/or preparation shall be included in the base bid. No additional charges will be allowed due to inadequate site inspection.
1.4 INTERPRETATION OF DRAWINGS AND SPECIFICATIONS
K. At the time of bidding, contractor shall familiarize himself with the drawings and specifications of this project. Any questions, misunderstandings, conflicts, deletions, etc. shall be submitted to the Architect in writing for clarifications prior to issuance of the final addendum and bidding of the project. After signing the contract, the contractor shall meet the intent, purpose, and function of the contract documents; and any costs of materials, labor, and equipment arising therefrom, to make each system complete and operable, shall be paid by the contractor, which shall not result in any change in contract cost.
L. At the time of bidding, the electrical contractor shall be responsible to coordinate with the general contractor regarding any references to other divisions or trades on the electrical drawings or specifications.
1.5 DRAWING INTERPRETATION
M. The electrical contractor shall refer to the architectural and/or mechanical drawings for exact placement of all electrical equipment. The electrical drawings unless specifically dimensioned are to be considered diagrammatic and are not to be scaled for placement of equipment.
1.6 CODES–REGULATIONS AND PERMITS
N. In the installation of this work, comply in every way with the requirements of the laws, ordinances and rules of the State and National Board of Fire Underwriters, The National Electrical Code, and the rules and regulations of local ordinances.
O. If a conflict occurs between these rules and this specification, the rules are to govern. Accept this condition upon submitting bid, and no extra charge will be allowed after the electrical contract is awarded. This shall not be construed as relieving the Contractor from complying with any requirements of the plans or specifications which may be in excess of requirements of the hereinbefore mentioned rules and not contrary to same. All materials and equipment installed, including lighting fixtures, shall have been tested and approved by Underwriter's Laboratory and shall be so labeled.
P. All fees shall be included in the contract price. The Contractor shall furnish a certificate of approval to the Architect from the Inspection Authority at completion of the work.
1.7 SUPERVISION
Q. Workmanship shall be neat, have a good mechanical appearance and conform to the best electrical construction practices. A competent superintendent shall be in charge of the work at all times. Any person employed and found incompetent shall be removed at once and replaced by someone satisfactory when requested by the Architect. All work shall be carried out under the direction of the Architect to fulfill the true intent and meaning of the drawings and specifications. Only licensed master or journeyman craftsmen may be engaged in this project, except apprentice electricians may be used on not more than a 1:1 ratio with the total number of master or journeyman electricians.
1.8 FIELD DESIGN CHANGES
R. No field changes, additions, or locations shall be made without written approval.
S. Current red line drawings must be on site at all times.
1.9 SHOP DRAWINGS
T. It is understood that, before the manufacture or installation of any equipment under this contract is carried forward, shop drawings of such work shall be submitted for review. It is the responsibility of the electrical contractor to check the shop drawings for detailed compliance with the contract documents. Prior to submitting the drawings for review, verify that all dimensions, contract document requirements, ballast voltages, and correlation of job site have been checked. The electrical contractor shall indicate any corrections to the shop drawings or any exceptions to the contract document requirements, by notation on the shop drawings and by cover letter. IF THIS IS NOT DONE THE DRAWINGS WILL BE RETURNED. At least eight (8) catalog sheets or shop drawings shall be submitted in ample time, no work being executed until each review has been completed.
V. Verification of Contract Document Requirements. The Electrical Contractor shall be required to furnish shop drawings with the contract document requirements high–lighted to verify they have been checked. Items to be high–lighted include, but are not limited to:
18. Electrical Panels
a. Panel number or designation
b. Panel type
c. Phase
d. Voltage
e. Flush or surface
f. Main lug amps
g. Main breaker amps
h. Fault current capacity
i. Branch circuit breakers
19. Lighting fixtures: items on the shop drawings that correlate to all items shown on the fixture schedule:
j. All items in catalog number
k. Fixture mounting
l. Lamp type
W. The review of shop drawings by the engineer is only to determine if they are in general compliance with the information given in the contract documents, and serves to determine the contractors understanding of the design concept. If some errors are detected but others are overlooked during the review this does not grant the contractor permission to proceed in error. Regardless of any information contained in the shop drawings, the requirements of the contract documents must be followed and are not waived or superseded in any way by the shop drawing review.
X. The following shop drawings are required within 20 days after signing of the contract.
20. Panelboards
21. Disconnects
22. Lighting fixtures (coordinate with ceiling contractor)
23. Sound System Equipment
24. Wiring Devices
Y. One month after the contract is signed, bind and numerically index four (4) complete sets of all shop drawings and submit to the mechanical contractor for inclusion in the operation and maintenance manual. Each unit type shall have its own individual catalog sheet giving characteristics, data, dimensions, catalog numbers and parts lists. (Example: If two items of equipment A & D appear on the same sheet, an individual sheet shall be provided for each unit specified.) The manual shall be numerically indexed with an index sheet explaining the contents of each section.
1.10 GUARANTEE
Z. The entire electrical system installed under this contract shall be left in proper working order and be in compliance with the drawings, specifications and/or authorized changes to the satisfaction of the Owner's Representative. Without additional charge, replace any work or materials which develop defects, except from ordinary wear and tear, within one year from the date of final acceptance. Exception: Incandescent and fluorescent lamps which shall be guaranteed for a period of two months from acceptance of the installation by the Owner or his agent. A written guarantee covering the above provisions shall be signed and delivered to the Architect after the project has final acceptance by the Inspecting Authority.
PART 2 – PRODUCTS
2.1 SPECIFIED PRODUCTS
AA. The contractors under this division shall thoroughly familiarize themselves with all specified products and their application relating to their work. Any objections to the use of any specified product shall be submitted to the architect in writing prior to bidding.
2.2 MATERIALS AND WORKMANSHIP
AB. All materials and equipment furnished and installed shall be of high quality, new, and meet the standards of NEMA, IPCA, LS, UL, NFPA, IBC, UOSHA, NEC, and shall bear their label wherever standards have been established and label service is available. Where materials and equipment are specified by manufacturer's name, the type and quality required is thereby denoted. The Architect shall be afforded every facility, deemed necessary to inspect and examine the materials and apparatus being installed to prove their quality, skill and competency of workmanship.
2.3 SUBSTITUTIONS
AC. The equipment specified carries brand names and catalog numbers and shall be interpreted as establishing a standard of quality unless otherwise noted. Substitutions will be considered if a duplicate written application (2 copies) is at the offices of the Architect and Engineer at least four (4) working days prior to issue of the final addendum. The application shall include the following: 1) A statement declaring the equipment proposed is equal to that specified by having the same physical characteristics and dimensions and meet the drawings layout and structural conditions as well as load requirements; 2) The specified and submittal catalog numbers of the equipment under consideration; 3) A pictorial and specification brochure.
AD. Any conflict arising from the use of substituted equipment shall be the responsibility of the contractor, who shall bear all costs required to make the equipment comply with the intent of the plans and specifications.
AE. At the option of the Architect, samples may be required for non–standard or substituted items before installation during construction.
AF. No materials or apparatus shall be substituted after the bid opening except where the equipment manufacturer has been discontinued or delivery becomes a problem, then written approval of the Architect is required.
AG. Bidding – only equipment specified in the contract documents and/or approved by an addendum will be used in the base bid.
PART 3 – EXECUTION
3.1 PROGRESS AND COORDINATION OF WORK
AH. The electrical work shall be laid out in advance of construction to eliminate unnecessary cutting, drilling, channeling, etc. Where such cutting and drilling, or channeling becomes necessary for proper installation; perform with care, use skilled mechanics of the trades involved, repair damage to building and equipment at no additional cost to the Owner. Cutting work of other trades shall be done only with the consent of the General Contractor. Cutting of structural members shall be done only with the approval of the Architect.
AI. Cooperate with other trades to coordinate locations of electrical outlets and apparatus.
AJ. Before any electrical panels, disconnects & motor starters or their associated feeders are installed, the electrical contractor shall be responsible to inform all other trades on the job of the requirements of N.E.C. 110–26. If any conflicts are noted he shall notify the architect immediately, along with notification in writing. No additional cost, to the job under the electrical contract, will be allowed for relocating electrical panels after installation.
AK. Perform for other trades the electrical wiring and connections for all devices or apparatus where not specified herein or indicated on the drawings. Consult the Architectural and Mechanical drawings to avoid the location of switches, outlets and other equipment from being hidden behind doors, cabinets, counters, heating equipment, etc. Buried electrical devices and/or connections shall be relocated as directed, at no additional cost to the Owner.
AL. Where conduit, outlets or apparatus is to be cast in concrete or encased, it must be located and secured by a journeyman or foreman present at the point of installation. He shall check the locations of the electrical items before and after the concrete and masonry installation and shall relocate displaced items.
AM. No changes shall be made in the design or location of apparatus unless specifically approved in writing.
3.2 DRAWINGS
AN. Architectural and Mechanical drawings are a part of the electrical work insofar as they apply, as if referred to in full.
AO. Since the drawings of floor and ceiling installation are made at small scale, outlets, devices, equipment, etc., are indicated only in their approximate location, unless dimensioned. Locate outlets and apparatus symmetrically on floors, walls and ceilings where not dimensioned, and coordinate such locations with work of other trades to prevent interferences. All dimensions on the job shall be verified. Do not scale the electrical drawings, but refer to the architectural and mechanical drawings and dimensions.
AP. The standard industry symbols together with the special symbols, noted and instructions indicated on the drawings describe the work, materials, apparatus and outlets required and all are to be included as a part of this specification.
3.3 EQUIPMENT CONNECTIONS
AQ. Provide the materials and make the electrical connections to all equipment having electrical requirements as indicated in the Architectural and/or Mechanical section of the specifications and drawings. This includes Owner furnished equipment.
3.4 CLEAN–UP
AR. Clean up all equipment, conduit, fittings, packing cartons and other debris that is a direct result of the installation of the equipment under this contract.
3.5 STORAGE AND PROTECTION OF MATERIALS
AS. Provide storage space for storage of materials and apparatus and assume complete responsibility for all losses due to any cause whatsoever. In no case shall storage interfere with traffic conditions in any public thoroughfare or constitute a hazard to persons in the vicinity. Protect completed work, work underway, and apparatus against loss or damage.
3.6 EXCAVATION AND BACKFILLING
AT. Do all excavating and backfilling required for installation of any and all parts of the work. Work shall be done according to other applicable Divisions of this specification.
AU. Perform excavation in a manner to protect walls, footings and other structural members from being disturbed or damaged in any way.
AV. All backfill shall be mechanically compacted in 6 inch layers to 95% of maximum soil density per ASTM D–1557.
AW. All surplus earth not needed for backfilling must be removed from the premises.
AX. Scope:
25. Trench for electrical service entrance.
26. Trench for telephone service entrance.
27. Trench for parking light installation.
28. Trench for television service entrance.
29. Backfilling and compacting.
3.7 DEMOLITION
AY. This Contractor shall be responsible for block–outs or demolition work pertaining to the installation of the electrical system.
AZ. Seal around all electrical equipment penetrating outside walls, roofs, unheated spaces, air plenums, etc., with Dow Corning Silicone RTV foam.
BA. Seal around all electrical equipment penetrating fire walls with a noncombustible sealer approved for the purpose.
BB. See drawings for demolition notes of existing electrical systems.
3.8 COMPLETION OF WORK AND TESTS
BC. Before any underground service entrance circuits or feeder circuits are energized, make megger ground tests on the conductors. Record the readings along with ambient temperature and moisture conditions and submit to the Architect.
BD. Submit with a letter of guarantee a record of all voltage reading and amp meter reading on all feeders and motors. If there are any abnormal conditions, they shall be brought to the attention of the Architect in writing as a part of this submittal.
END OF SECTION 26 0001

SECTION 26 0050 – BASIC MATERIALS AND METHODS
PART 1 – GENERAL
1.1 GENERAL
BE. All wiring shall be run concealed, except at surface mounted panels and apparatus – See raceways for type of materials and additional information. All wiring shall be run in conduit unless specifically noted otherwise.
BF. All branch circuit splices, taps, fixture connections, etc., shall be made with an approved pressure connector or wire nuts such as Ideal Spring type. Pigtails at each outlet or device box shall be 6 inches long.
BG. Labeling: Engraved black formica w/white core labels, 1/16" thick shall be bolted on the interior and the exterior of branch panels (panel name and voltage) and the exterior of disconnect switches, motor controls, major J–boxes (power and auxiliary), push buttons, thermal switches, time switches and similar equipment. The labels shall be 1/4" high engraved letters, such as 1–1/2 HP FAN, F–1, PANEL – A.
BH. The phase of each feeder conductor shall be color coded at each end in panels and junction boxes.
BI. The Contractor is responsible for all demolition, patching and repair of all finished interior surfaces pertaining to the installation of this particular phase of work. All surfaces shall be finished (Painted, Etc.) to match the adjacent materials, finishes and color. Work shall be done by professional tradesmen on the job.
BJ. Hard surfaces: Whenever demolition or excavation is required for installation of the electrical system, it shall be the responsibility of this contractor to make repairs and/or replacements of hard finish surfaces such as concrete, asphalt, etc.
BK. The method of patching and repair should follow good construction practices and all finished surfaces shall match materials and finish wherein the demolition occurred. Coordinate with other Divisions for patching requirements.
END OF SECTION 26 0050

SECTION 26 0070 – ELECTRICAL CONNECTIONS FOR EQUIPMENT
PART 1 – GENERAL
1.1 RELATED DOCUMENTS
BL. Drawings and general provisions of Contract, including General and Supplementary Conditions and Division–1 Specification sections, apply to work of this section.
BM. This section is a Division–26 Basic Materials and Methods section, and is part of each Division–26 section making reference to electrical connections.
1.2 DESCRIPTION OF WORK
BN. Extent of electrical connection for equipment includes final electrical connection of all equipment having electrical requirements. Make final connections for all owner furnished equipment. See other applicable portions of specification for building temperature control wiring requirements.
BO. Refer to Division–23 sections for motor starters and controls furnished integrally with equipment; not work of this section.
BP. Refer to Division–23 section for control system wiring; not work of this section.
BQ. Refer to sections of other Divisions for specific individual equipment power requirements.
1.3 QUALITY ASSURANCE
BR. NEC Compliance: Comply with applicable portions of NEC as to type products used and installation of electrical power connections.
BS. UL–Labels: Provide electrical connection products and materials which have been UL–listed and labeled.
PART 2 – PRODUCTS
2.1 GENERAL
BT. For each electrical connection indicated, provide complete assembly of materials, including but not necessarily limited to, raceways, conductors, cords, cord caps, wiring devices, pressure connectors, terminal (lugs), electrical insulating tape, heat–shrinkable insulating tubing, cable ties, solderless wire nuts, and other items and accessories as needed to complete splices, terminations, and connections as required. See Section 260110, Conduit Raceways; Section 260140 Wiring Devices; and Section 260120 Wire and Cables for additional requirements. Provide final connections for equipment consistent with the following:
30. Permanently installed fixed equipment – flexible seal–tite conduit from branch circuit terminal equipment, or raceway, to equipment, control cabinet, terminal junction box or wiring terminals. Totally enclose all wiring in raceway.
31. Movable and/or portable equipment – wiring device, cord cap, and multi–conductor cord suitable for the equipment and in accordance with NEC requirements (Article 400). Provide 5 foot cords for washers, dryers, ranges and disposals.
32. Other methods as required by the National Electrical Code and/or as required by special equipment of field conditions.
BU. All electrical equipment for power connections, required for operation of mechanical equipment not furnished as an integral part of that equipment shall be furnished and installed under Division 26.
PART 3 – EXECUTION
3.1 INSTALLATION OF ELECTRICAL CONNECTIONS
BV. Make electrical connections in accordance with connector manufacturer's written instructions and with recognized industry practices, and complying with requirements of NEC and NECA's "Standard of Installation" to ensure that products fulfill requirements.
BW. Connect electrical power supply conductors to equipment conductors in accordance with equipment manufacturer's written instructions and wiring diagrams.
BX. Coordinate installation of electrical connections for equipment with equipment installation work.
BY. Verify all electrical loads (voltage, phase, full load amperes, number and point of connections, minimum circuit ampacity, etc.) for equipment furnished under Divisions of this specification, by reviewing respective shop drawings furnished under each division. Meet with each subcontractor furnishing equipment requiring electrical service and review equipment electrical characteristics. Report any variances from electrical characteristics noted on the electrical drawings to Architect before proceeding with rough–in work.
BZ. Obtain and review the equipment shop drawings to determine particular final connection requirements before rough–in begins for each equipment item.
CA. Location of disconnect switches as shown on the drawings is approximate. Electrical contractor is responsible for proper location for required code clearances.
CB. Electrical contractor to verify motor sizes with mechanical before ordering overload heaters for starters.
CC. Refer to Section 260120, Conductors, for identification of electrical power supply conductor terminations.
END OF SECTION 26 0070

SECTION 26 0110 – CONDUIT RACEWAYS
PART 1 – GENERAL
1.1 RELATED DOCUMENTS
A. Drawings and general provisions of Contract, including General and Supplementary Conditions and Division 1 Specification sections, apply to work of this section.
B. This section is a Division–26 Basic Materials and Methods section, and is part of each Division–26 section making reference to electrical raceways and specified herein.
1.2 DESCRIPTION OF WORK
C. Extent of raceways is indicated by drawings and schedules.
D. Types of raceways in this section include the following:
1. Electrical Metallic Tubing
2. Flexible Steel Conduit
3. Liquid–tight Flexible Steel Conduit
4. Rigid Metal Conduit
5. Plastic Rigid Conduit
1.3 QUALITY ASSURANCE
E. Manufacturers: Firms regularly engaged in manufacture of raceway systems of types and sizes required, whose products have been in satisfactory use in similar service for not less than three (3) years.
F. Standards: Comply with applicable portions of NEMA standards pertaining to raceways. Comply with applicable portions of UL safety standards pertaining to electrical raceway systems; and provide products and components which have been UL–listed and labeled. Comply with NEC requirements as applicable to construction and installation of raceway systems.
G. Submittals: Not required.
PART 2 – PRODUCTS
H. Provide and install raceways for the electrical system as shown on the plans, or as required by N.E.C. The raceways shall be concealed except at surface mounted panels and/or apparatus and open truss ceilings. Minimum conduit size is 3/4".
I. Acceptable raceways (metallic conduit to be galvanized):
6. Galvanized Rigid Conduit (GRC) – may be used in all locations. When installed in earth, cover with one layer of scotch wrap.
7. Electrical Metallic Tubing (EMT) – may be used in indoor, dry locations not subject to damage, not in contact with earth, and not embedded in the concrete floor slab (slab on earth grade only). EMT shall not be used outdoors.
8. Plastic Rigid Conduit (PVC) – PVC schedule 40: may be used underground, or below concrete. (See ground conductors). All bends greater than 30 degrees shall be GRC. (This includes rising up through the floor). All connections to concrete or structure shall be a minimum of 10' of GRC at the end of the PVC run. All conduits passing horizontally through concrete shall be GRC for 5' before and after passing through the concrete (not applicable to stub up through floor slab). All underfloor conduits shall be run below the concrete slab.
9. Flexible Steel Conduit: 1/2" minimum used for indoor find connections to equipment.
10. Liquid Tight Flexible Steel Conduit: 1/2" minimum used for outdoor final connections to equipment.
PART 3 – EXECUTION
J. All exposed conduit shall be installed parallel with or at right angles to the building structure lines. Raceways above ceilings in accessible attics shall be considered as exposed installations.
K. All branch circuit conduit runs shall be installed concealed in walls and ceilings. Conduit installation in existing walls that requires cutting and patching shall have patch and finish work done under the Division 26 contract. All work shall be done by the professional finish subcontractor on the job and shall subcontract the work under the Division 26 subcontractor.
L. When installing conduit, all cuts shall be smooth and square with the run and inside and outside burrs removed. Conduit joints in concrete or in the earth shall be made water tight with compound seal.
M. Install accessible junction boxes or conduiets in conduit runs as required by NEC, and at 100 ft. intervals on long runs. Each junction box shall be supported independent of the conduit. Support vertical conductor runs per NEC 300–19.
N. The open ends of conduit shall be capped to keep out debris until the project is complete.
O. All mechanical exterior equipment shall be connected with vinyl covered flexible conduit with accompanying grounding conductor.
P. Pull a mandril and swab through all conduit before installing conductors.
Q. All empty conduit shall be left with a 200–lb. nylon pull cord installed.
R. 3/8" steel flex may be used for single connections to recessed light fixtures.
END OF SECTION 26 0110

SECTION 26 0120 – CONDUCTORS AND CABLES
PART 1 – GENERAL
1.1 RELATED DOCUMENTS
S. Drawings and general provisions of Contract, including General and Supplementary Conditions and Division–1 Specification sections, apply to work of this section.
T. This section is a Division–26 Basic Materials and Methods section, and is part of each Division–26 section making reference to conductors and cables specified herein.
1.2 DESCRIPTION OF WORK
U. Extent of electrical conductor and electrical cable work is indicated by drawings and schedules.
V. Types of conductors and cables in this section include the following:
11. Copper conductors (600V)
W. Applications for conductors and cables required for project include:
12. Power Service and Distribution
13. Feeders
14. Branch Circuits
1.3 QUALITY ASSURANCE
X. Comply with NEC as applicable to construction and installation of electrical conductors and cable. Comply with UL standards and provide electrical conductors and cables which have been UL–listed and labeled.
Y. Comply with applicable portions of NEMA/Insulated Cable Engineers Association standards pertaining to materials, construction and testing of conductors and cable.
Z. Comply with applicable portions of ANSI/ASTM and IEEE standards pertaining to construction of conductors and cable.
1.4 SUBMITTALS
AA. Product Data: Submit manufacturer's data on electrical wire, cable and connectors.
PART 2 – PRODUCTS
AB. COPPER CONDUCTORS (600V): insulation types THHN, THWN, XHHW as required by application.
AC. Provide factory–fabricated conductors of sizes, ratings, materials, and types indicated for each service. Where not indicated provide proper selection to comply with project's installation requirements and NEC standards.
AD. Provide color and coding of conductors as follows:
15. Wire sizes of #8 and smaller shall be factory colored throughout. Larger conductors shall be identified with a minimum of 6" of color wrapped tape at junction boxes and termination.

120/240V
A–Phase – Black
C–Phase – Red
Neutral – White
Ground – Green

16. Switch legs and travelers shall be colors other than those listed above.
PART 3 – EXECUTION
3.1 INSTALLATION
AE. General: Install electrical conductors and cables as indicated, in compliance with manufacturer's written instructions, applicable requirements of NEC and NECA's "Standards of Installation", and in accordance with recognized industry practices.
AF. Coordinate installation work with electrical raceway and equipment installation work, as necessary for proper interface.
AG. Use pulling compound or lubricant, where necessary; compounds must not deteriorate conductor or insulation.
AH. Keep conductor splices to minimum.
AI. Install splices and tapes which have mechanical strength and insulation rating equivalent–or–better than conductor.
AJ. Use splice and tap connectors which are compatible with conductor material.
3.2 FIELD QUALITY CONTROL
AK. Prior to energization, test cable and wire for continuity of circuitry, and also for short circuits. Correct malfunctions when detected.
AL. Subsequent to wire and cable connections, energize circuitry and demonstrate functioning in accordance with requirements.
AM. Provide a full sized ground wire in all paralleled conduits per NEC 250–122.
END OF SECTION 26 0120

SECTION 26 0135 – ELECTRICAL BOXES AND FITTINGS
PART 1 – GENERAL
1.1 RELATED DOCUMENTS
AN. Drawings and general provisions of Contract, including general and Supplementary Conditions and Division–1 Specifications sections, apply to work of this section.
AO. This section is a Division–26 Basic Materials and Methods section, and is a part of each Division–26 section making reference to electrical wiring boxes and fittings specified herein. See Section 260110, Raceways, for additional requirements.
1.2 DESCRIPTION OF WORK
AP. Extent of electrical box and electrical fitting work is indicated by drawings and schedules.
AQ. Types of electrical boxes and fittings in this section include the following:
19. Outlet boxes
20. Junction boxes
21. Pull boxes
22. Conduit bodies
23. Bushings
24. Locknuts
25. Knockout closures
26. Miscellaneous boxes and fittings
1.3 QUALITY ASSURANCE
AS. Comply with NEC as applicable to construction and installation of electrical boxes and fittings. Comply with ANSI C 134.1 (NEMA Standards Pub No. OS 1) as applicable to sheet–steel outlet boxes, device boxes, covers and box supports. Provide electrical boxes and fittings which have been UL–listed and labeled.
1.4 SUBMITTALS
AT. None required.
PART 2 – PRODUCTS
2.1 FABRICATED MATERIALS
AU. Fittings: Compression or set screw type (screws must have a full set) connectors and couplings used on EMT shall be steel. INDENTER TYPE OR DIE CAST FITTINGS ARE NOT ACCEPTABLE.
AV. Clamp type malleable iron fittings shall be used for standard steel flex conduit.
AW. Interior Outlet Boxes: Provide one piece, galvanized flat rolled sheet steel interior outlet wiring boxes, of types, shapes and sizes, including box depths, to suit each respective location and installation; construct with stamped knockouts in back and sides, and with threaded screw holes with corrosion–resistant screws for securing box covers and wiring devices; minimum depth 2–1/8". Boxes shall be sized as required to meet N.E.C. requirements for number of conductors in boxes.
AX. Interior Outlet Box Accessories: Provide outlet box accessories as required for each installation, including mounting brackets, hangers, extension rings, fixture studs, cable clamps and metal straps for supporting outlet boxes, which are compatible with outlet boxes being used and fulfilling requirements of individual wiring applications.
AY. Weatherproof Outlet Boxes: Provide corrosion–resistant cast–metal weatherproof outlet wiring boxes, of types, shapes and sizes (including depth) required, with threaded conduit ends, cast aluminum weatherproof in–use covers compatible with GFCI receptacles. Provide weather resistant gaskets and stainless steel screws.
AZ. Junction and Pull Boxes: Provide code–gage sheet steel junction and pull boxes, with screw–on covers; of types, shapes and sizes to suit each respective location and installation; with welded seams and equipped with stainless steel nuts, bolts, screws and washers.
BA. Conduit Bodies: Provide galvanized cast–metal conduit bodies, of types, shapes and sizes to suit respective locations and installation, construct with threaded–conduit–entrance ends, removable covers, and corrosion–resistant screws.
BB. Bushings, Knockout Closures and Locknuts: Provide corrosion–resistant punched–steel box knockout closures, conduit locknuts and malleable iron conduit bushings and offset connectors, of types and sizes to suit respective uses and installation.
PART 3 – EXECUTION
3.1 INSTALLATION OF ELECTRICAL BOXES AND FITTINGS
BC. General: Install electrical boxes and fittings where indicated, complying with manufacturer's written instructions, applicable requirements of NEC and NECA's "Standard of Installation", and in compliance with recognized industry practices to ensure that products fulfill requirements.
BD. Raceway expansion fittings shall be installed on all runs that cross a building expansion joint. This shall include provisions for the safe movement of contained conductors.
BE. All connectors shall have insulated throats.
BF. Switch, Telephone, and Receptacle Outlet Boxes: Shall be a minimum of 4" Square, 2 1/8" deep, with deep adapting plaster rings set flush with the finished surfaces. A gang box (nonsectional) shall be used where more than two switches or devices are located at one point. Care and good coordination will be required to install boxes flush with the wall surface.
BG. Coordinate depth of all outlet boxes with architectural finish schedule so outlet box is flush with finish surface.
BH. Television, telephone, and microphone outlet boxes shall be mounted at convenience outlet height unless otherwise indicated on the drawings or required by millwork.
BI. Standard switch box height shall be 48" to top of box and convenience outlet height 16" to bottom of box unless otherwise indicated on drawings or required by millwork or architectural details.
BJ. Coordinate installation of electrical boxes and fittings with wire/cable and raceway installation work.
BK. Provide cover plates for all boxes. See Section 260140, Wiring Devices.
BL. Provide weatherproof outlets for interior and exterior locations exposed to weather or moisture. Use cast metal in–use cover.
BM. Provide knockout closures to cap unused knockout holes where blanks have been removed.
BN. Install boxes and conduit bodies to ensure ready accessibility of electrical wiring. Install recessed boxes with face of box or ring flush with adjacent surface.
BO. Fasten boxes rigidly to substrates or structural surfaces to which attached, or solidly embed electrical boxes in concrete or masonry. USE BAR HANGERS FOR STUD CONSTRUCTION. Use of nails for securing boxes is prohibited. Set boxes on opposite sides of common wall with minimum 10" of conduit between them.
BP. Provide electrical connections for installed boxes.
END OF SECTION 26 0135

SECTION 26 0136 – SUPPORTING DEVICES
PART 1 – GENERAL
1.1 RELATED DOCUMENTS
BQ. Drawings and general provisions of Contract including General and Supplementary Conditions and Division–1 Specification sections, apply to work of this section.
BR. This section is a Division–26 Basic Materials and Methods section, and is a part of each Division–26 section making reference to supports, anchors, sleeves, and seals specified herein.
1.2 DESCRIPTION OF WORK
BS. Extent of supports, anchors and sleeves is indicated by drawings and schedules and/or specified in other Division–26 sections. See Section 260110, Raceways, for additional requirements.
BT. Work of this section includes, supports, anchors, sleeves and seals required for a complete raceway support system, including but not limited to: clevis hangers, riser clamps, C–clamps, beam clamps, one and two hole conduit straps, offset conduit clamps, expansion anchors, toggle bolts, threaded rods, U–channel strut systems, all associated accessories, and seismic bracing for electrical equipment. Nail drive straps for supporting conduit are prohibited.
1.3 QUALITY ASSURANCE
BU. Comply with NEC as applicable to construction and installation of electrical supporting devices. Comply with applicable requirements of ANSI/NEMA Std Pub No. FB 1, "Fittings and Supports for Conduit and Cable Assemblies". Provide electrical components which are UL–listed and labeled. Comply with the latest edition of the Uniform Building Code for seismic bracing.
PART 2 – PRODUCTS
2.1 MANUFACTURED SUPPORTING DEVICES
BV. General: Provide supporting devices; complying with manufacturer's standard materials, design and construction in accordance with published product information, and as required for a complete installation; and as herein specified. See drawings for additional requirements.
PART 3 – EXECUTION
3.1 SEISMIC RESTRAINTS
BW. Anchor and brace all electrical equipment for UBC seismic zone 3. Provide supports designed to withstand lateral and vertical "g" loadings equal to or greater than UBC requirements for equipment that is secured to the building or structure. Provide seismic restraints capable of resisting horizontal and vertical "g" loadings equal to or greater than UBC requirements for equipment mounted on vibration isolators.
BX. Install seismic supports on all T–Bar type fixtures consisting of galvanized 10 ga. wires connected from two corners of the fixture to structure.
3.2 INSTALLATION OF SUPPORTING DEVICES
BY. Install hangers, anchors, sleeves, and seals as required, in accordance with manufacturer's written instructions and with recognized industry practices to insure supporting devices comply with requirements. Comply with requirements of NECA, NEC and ANSI/NEMA for installation of supporting devices.
BZ. Coordinate with other electrical work, including raceway and wiring work, as necessary to interface installation of supporting devices with other work.
CA. Install hangers, supports, clamps and attachments to support piping properly from building structures. Arrange for grouping of parallel runs of horizontal conduits to be supported together on trapeze type hangers where possible.
CB. Raceways: Support raceways which are rigidly attached to structure at intervals not to exceed 5 feet on center and within 12" of each horizontal bend and vertical 90N bend, junction box, outlet or fitting. Support raceway (as it is installed) in accordance with the following:

NUMBER OF RUNS:	3/4" TO 1–1/2"	1–1/2" & LARGER
1	Full straps, clamps or hangers.	Hanger
2	Full straps, clamps or hangers.	Mounting Channel
3 or more	Mounting Channel	Mounting Channel

CC. Support suspended raceways on trapeze hanger systems; or individually by means of threaded rod and straps, clamps, or hangers suitable for the application. Do not use "tie wire" as a portion of any raceway support system; do not support raceway from ceiling support wires.
CD. Floor Mounted Equipment: Provide rigid attachment of all floor mounted equipment to the floor slab or structural system. Provide 5/8" bolts or expansion anchors at each 90 degree corner and at intervals not to exceed 24" on center along entire perimeter of the equipment. Provide rigid attachment for all floor mounted switchboards, panelboards, power and control equipment, motor control centers, dimmer cabinets, transformers, oil switches, battery packs and racks, and similar equipment furnished under Section 26.
CE. All equipment mounted against a wall shall be anchored to the wall, by approved methods, at not more than 24" intervals with at least 4 anchors per piece of equipment.
CF. Wireways, Bus Ducts and Cable Trays: Provide vertical and lateral support systems for all wireways, busway, and cable trays which are supported from overhead structure.
END OF SECTION 26 0136

LICENSED PROFESSIONAL ENGINEER
No. 178785
DAVID W. BEAZER
6.6.2024
STATE OF UTAH

BEAZER ENGINEERING INC.
P.O. BOX 652
MILLVILLE, UTAH 84326
C 435.770.8999
david@beazer-engineering.com

DATE
June 6, 2024

PROJECT TITLE
HOBBLED DOG CIDERY
625 West 8300 South
Paradise, Utah 84238

SHEET TITLE
ELECTRICAL SPECIFICATIONS
SCALE: NA

PROJECT NUMBER

REVISIONS

SHEET NUMBER
ESP101

SECTION 26 0140 – WIRING DEVICES

PART 1 – GENERAL

1.1 RELATED DOCUMENTS

CQ. Drawings and general provisions of Contract, including General and Supplementary Conditions and Division–1 Specification sections, apply to work of this section.

CH. This section is a Division–26 Basic Materials and Methods section, and is part of each Division–26 section making reference to wiring devices specified herein.

1.2 DESCRIPTION OF WORK

CI. The extent of wiring device work is indicated by drawings and schedules. Wiring devices are defined as single discrete units of electrical distribution systems which are intended to carry but not utilize electric energy.

CJ. Types of electrical wiring devices in this section include the following:
27. Receptacles
28. Switches
29. Cover plates
30. Dimmer controls
31. Cord caps
32. Cord connectors

1.3 QUALITY ASSURANCE

CK. Comply with NEC and NEMA standards as applicable to construction and installation of electrical wiring devices. Provide electrical wiring devices which have been UL listed and labeled.

1.4 SUBMITTALS

CL. Product Data: Submit manufacturer's data on electrical wiring devices.

PART 2 – PRODUCTS

2.1 FABRICATED WIRING DEVICES

CM. General: Provide factory–fabricated wiring devices, in types, and electrical ratings for applications indicated and complying with NEMA Stds Pub No. WD 1.

CN. Provide wiring devices (of proper voltage rating) as follows:

34. Convenience Outlets: (Provide Decora equal if required by Owner) Provide tamper resistant where required. Snap, BR, CR and DR series not allowed.

Mfgr.	Standard	Tamper Resistant	Surge Protected	Isolated Ground Surge Protected
Hubbell	HBL5352	8300TR	5352 IS	IG 5352 IS
P & S	5352	TR5352	No	No
Leviton	5362	5362–SGX	Substitute	Substitute
Cooper	5352	TR5352		

35. Switches: (Provide Decora equal if required by Owner)

Mfgr.	1 pole	3 way	4 way	W–Pilot
Hubbell	HBL1221	HBL1223	HBL1224	HBL1221–PL
P & S				
Leviton	1221	1223	1224	1221–PL
Cooper	1221	1223	1224	

CO. Other device manufacturers will be considered only if one convenience outlet sample is submitted to the engineer to verify equality with those specified prior to issuance of the final addendum.

CP. Provide devices in colors to match wall surfaces, brown, ivory, white, or gray per architects direction. Provide isolated ground outlets in ivory, orange, or gray per architect's direction.

CQ. Ground–fault Interrupter: Provide where required by code, general–duty, duplex receptacle, ground–fault circuit interrupters; grounding type UL–rated Class A, Group A, 20–amperes rating; 120–volts, 60 Hz; with solid–state ground–fault sensing and signaling; with 5 milliamperes ground–fault trip level; color as selected by Architect. Provide units of one of the following:
36. Hubbell
37. Square D

CS. Cord Caps and Connectors: Provide 3–wire grounding, cap plugs, and connectors of ampere and voltage rating required, for final equipment connection, and as indicated otherwise on drawings.
38. Hubbell

2.2 WIRING DEVICE ACCESSORIES

CT. Wall Plates: Provide coverplates for wiring devices; plate color to match wiring devices to which attached. Provide nylon coverplates in all finished areas. Provide galvanized steel plates in unfinished area. Engrave all receptacle plates other than those serving 120 volt, single phase devices. State voltage and amperage characteristics. Example: "208V, 30A".

PART 3 – EXECUTION

CU. Install wiring devices as indicated, in compliance with manufacturer's written instructions, applicable requirements of NEC and NECA's "Standard of Installation" and in accordance with recognized industry practices to fulfill project requirements.

CV. Coordinate with other work, including painting, electrical box and wiring work, as necessary to interface installation of wiring devices with other work. Install devices in boxes such that front of device is flush and square with coverplate. Drawings are small scale and, unless dimensioned, indicate approximate locations only of outlets, devices, equipment, etc. Locate outlets and apparatus symmetrically on floors, walls and ceilings where not dimensioned and coordinate with other work. Verify all dimensioned items on job site. Consult architectural cabinet, millwork, and equipment shop drawings before beginning rough–in of electrical work. Adjust locations of all electrical outlets as required to accommodate work in area, and to avoid conflicts with wainscot, back splash, backboards, and other items.

CW. Install wiring devices only in electrical boxes which are clean; free from excess building materials, dirt, and debris.

CX. Convenience outlets shall be installed flush with the wall surface and firmly mounted. Provide steel washers behind device ears where outlet boxes are recessed from wall surface.

CY. Install blank plates on all boxes without devices.

CZ. Delay installation of wiring devices until wiring work is completed. Delay installation of wall plates until after painting work is completed. Provide separate neutral conductor for each circuit that serves GFI receptacles.

DA. Where dedicated equipment is connected by cord and plug, provide a single receptacle as required by code.

DB. Protection of wall plates and receptacles: At time of substantial completion, replace those items which have been damaged, including those stained, burned and scored.

DC. Grounding: Provide electrically continuous, tight grounding connections for wiring devices, unless otherwise indicated.

DD. Testing: Prior to energizing circuitry, check wiring devices for electrical continuity and proper polarity connections. After energizing circuitry, test wiring devices to demonstrate compliance with requirements

END OF SECTION 26 0140

SECTION 26 0160 – PANELBOARDS

PART 1 – GENERAL

1.1 RELATED DOCUMENTS

A. Drawings and general provisions of Contract, including General and Supplementary Conditions and Division–1 Specification sections, apply to work of this section.

B. This section is a Division–26 Basic Materials and Methods section, and is part of each Division–26 section making reference to panelboards specified herein.

1.2 DESCRIPTION OF WORK

C. Extent of panelboard and enclosure work, is indicated by drawings and schedules.

D. Types of panelboards and enclosures in this section include lighting and appliance panelboards, and power distribution panelboards.

1.3 QUALITY ASSURANCE

E. Provide units which have been UL listed and labeled. Comply with NEC as applicable to installation of panelboards, cabinets, and cutout boxes. Comply with NEC pertaining to installation of wiring and equipment in hazardous locations. Comply with NEMA stds. Pub No. 250, "Enclosures for Electrical Equipment (1000 volt maximum)". Pub No. 1, "Instructions for Safe Installation, Operation and Maintenance of Panelboards Rated 600 Volts or Less".

1.4 SUBMITTALS

F. Product Data: Submit manufacturer data including specifications, installation instructions and general recommendations, for each type of panelboard required.

G. Shop Drawings: Submit dimensioned drawings of panelboards and enclosures showing accurately scaled layouts of enclosures and required individual panelboard devices, including but not necessarily limited to, circuit breakers, fusible switches, fuses, ground–fault circuit interrupters, and accessories. Panel dimensions shown on the drawings are one manufacturer's dimensions. Panel dimensions submitted by other manufacturers shall not exceed the panel dimensions shown on the drawings.

PART 2 – PRODUCTS

H. Acceptable Manufacturers: Subject to compliance with requirements, provide one of the following:
1. General Electric Company
2. Square D Company
3. Cutler Hammer

I. Panel sizes shown on drawings are for Square D panels. If other panels are substituted, the contractor shall verify proper clearances per N.E.C. Unless otherwise noted, main and distribution panels shall be a minimum 36" wide.

J. Prior to submittals of shop drawings the panel board manufacturers representative shall make a field visit to verify that existing panels have available space for the new breakers called for on the drawings and that the proper frame breakers will be supplied.

K. Panelboards: General: Except as otherwise indicated, provide panelboards, enclosures and ancillary components, of types, sizes, and ratings indicated. Equip with number of unit panelboard devices as required for complete installation. Fully equip "spaces" with hardware to receive breaker or switch of size indicated.

L. Power Distribution Panelboards: Provide dead–front safety type power distribution panelboards as indicated, with switching and protective devices in quantities, ratings, types and with arrangement shown. Equip with copper bus bars, neutral bus and ground bus. Provide fusible or circuit breaker branch and main devices as indicated.

M. Lighting and Appliance Panelboards: Provide dead–front safety type lighting and appliance panelboards as indicated, with switching and protective devices in quantities, ratings, types, and arrangement shown. Provide bolt–on thermal magnetic type branch breakers. Where multiple breakers are indicated provide with common trip handle. Equip with copper bus bars, neutral bus, and ground bus.

N. All breakers in the main distribution panels shall have sufficient interrupting capacity to safely interrupt the available short circuit current from the transformer bank, as noted on the drawings. Panels and breakers are to be fully rated unless otherwise noted.

O. Manufacturer: All distribution and branch panels, breakers, and associated equipment shall be of the same manufacturer.

P. Buss bracing shall be as required to handle fault current as shown on the drawings.

Q. "Space" denotes a space fully equipped to receive a breaker of the type noted.

R. Panelboard Enclosures: Provide galvanized sheet steel cabinet type enclosures, in sizes and NEMA types as indicated, code–gage minimum 16–gage thickness. Provide fronts with adjustable indicating trim clamps, and doors with flush locks and keys, all panelboard enclosures keyed alike, with concealed door hinges and door swings as indicated. Equip with interior circuit–directory frame, and card with clear plastic covering. Provide baked gray enamel finish over a rust inhibitor. Provide enclosures fabricated by same manufacturer as overcurrent devices contained therein. Bolt engraved Formica labels indicating panel name and voltage on the interior and exterior of panelboards.

S. Finish: Coat interior and exterior of surface with manufacturer's standard color; baked on enamel finish.

T. Identification: Provide 1/16" thick black Formica labels with 1/4" high white lettering on the interior of each panelboard; include panelboard name and voltage. Provide red Formica labels on emergency system panels.

PART 3 – EXECUTION

3.1 INSTALLATION OF PANELBOARDS

V. General: Install panelboards and enclosure where indicated, in accordance with manufacturer's written instructions, applicable requirements of NEC and NECA's "Standard of Installation", in compliance with recognized industry practices to ensure products fulfill requirements.

W. Panelboard Makeup: In making up a panel, the conductors shall be neatly formed therein. Wires shall be protected from sharp metal edges or corners.

X. Mounting: Provide 4" high concrete curb under floor standing distribution panelboards.

Y. Coordinate installation of panelboards and enclosures with cable and raceway installation work. Anchor enclosures firmly to walls and structural surfaces, ensuring they are permanently and mechanically secure. Arrange conductors neatly within enclosure, and secure with suitable nylon ties.

Z. Branch panels shall generally be installed with the top of the panel at 6 ft. above floor.

AA. Fill out panelboard's circuit directory card upon completion of installation work. Utilize actual final building room numbers, not architectural numbers used on drawings. Identify individual lighting circuits and individual receptacle circuits by room served. Include room number with equipment circuit designations. All directories to be typewritten.

AB. Provide 5 spare 3/4" conduits from each recessed panel to each accessible attic and/or underfloor area.

AC. Provide stand off wall brackets for surface wall mounted panels and/or gutters as required to bring front edges flush with each other as required by NEC 110–16A.

AD. Provide identification of disconnecting means as required by NEC 225–37 or 230–2.

AE. All subpanels shall be labeled to identify the main panel that supplies the feeder circuit.

AF. All feeder circuit breakers shall be labeled to identify the location of the subpanel or equipment supplied.

AG. Where more than one voltage system is used in a building identify color coding at each panel per NEC 210–40. Fasten engraved plastic identification label, with black background and white lettering, to panel cover.

AH. Where a GFI main breaker is provided, as required by code, a factory representative shall adjust the breaker in the field for proper trip setting and conduct a field test. Test reports shall be submitted to the architect and the inspecting authority.

AI. Electrical Contractor shall verify the fit and required N.E.C. clearances of the equipment in the main electrical room(s) with shop drawings before the installation of service and feeder conduits.

END OF SECTION 26 0160

SECTION 26 0170 – MOTOR & CIRCUIT DISCONNECTS

PART 1 – GENERAL

1.1 RELATED DOCUMENTS

AJ. Drawings and general provisions of Contract, including General and Supplementary Conditions and Division–1 Specification sections, apply to work of this section.

AK. This section is a Division–26 Basic Materials and Methods section, and is part of each Division–26 section making reference to motor and circuit disconnect switches specified herein.

1.2 DESCRIPTION OF WORK

AL. Extent of motor and circuit disconnect switch work is indicated by drawings and schedules. Work includes complete installation and electrical connections.

1.3 QUALITY ASSURANCE

AM. Provide motor and circuit disconnect switches which have been UL listed and labeled. Comply with applicable requirements of NEMA Stds Pub. No. KS 1, and NEC.

1.4 SUBMITTALS

AN. Product Data: Submit manufacturer's data including specifications, installation instructions and general recommendations, for each type of motor and circuit disconnect switch required.

AO. Shop Drawings: Submit dimensioned drawings of electrical motor and circuit disconnect switches which have rating of 100 amperes and larger.

PART 2 – PRODUCTS

AP. Acceptable Manufacturers: Subject to compliance with requirements, provide products of one of the following (for each type of switch):
6. General Electric Co.
7. Square D Company
8. Cutler Hammer

AQ. Manufacturer subject to compliance with requirements, provide fuses of the following manufacturer, no substitution:
9. Bussmann
10. Littelfuse
11. Edison

AR. Enclosures: Enclosures shall be NEMA type 1 or, where required as weatherproof, NEMA Type 3R.

AS. Fabricated Switches: General: Provide disconnect and safety switches sized as required for the load served and as indicated herein fused unless noted otherwise. Provide:
12. Heavy duty switches on 240 Volt rated circuits.
13. HP rated switches on all motor circuits.

AT. Heavy Duty Switches: Provide heavy–duty type, sheet–steel enclosed switches, fusible as indicated of types, sizes and electrical characteristics indicated; rated 240 (or 600) volts, 60 hertz; incorporating spring assisted, quick–make, quick–break mechanisms. Provide single phase or three phase and with solid neutral as required by application. Equip with operating handle which is capable of being padlocked in OFF position. Provide NEMA 1 or NEMA 3R as required by application, unless noted. Provide fusible switches with Class R rejection fuse clip kits.

AU. Fuses: Provide fuses for switches, as required of classes, types and ratings needed to fulfill electrical requirements for service indicated. Fuses shall be Bussman low peak sized not to exceed 125% of motor full load amperes for motors with a 1.15 service factor and sized not to exceed 115% of motor full load amperes for all other motors. Provide spare fuses amounting to one spare fuse for each 10 installed but not less than three of any one type and size. Provide Buss SAM fuse covers for each fuse.

PART 3 – EXECUTION

3.1 INSTALLATION OF MOTOR AND CIRCUIT DISCONNECT SWITCHES

AV. Install motor and circuit disconnect switches where indicated, complying with manufacturer's written instructions, applicable requirements of NEC, NEMA, and NECA's "Standard of Installation" and in accordance with recognized industry practices to ensure that products fulfill requirements.

AW. Coordinate motor circuit disconnect switch installation work with electrical raceway and cable work, as necessary for proper interface.

AX. Install disconnect switches used with motor driven appliances, and motors and controllers within sight of controller position.

AY. Provide identification of disconnecting means as required by NEC 225–37 or 230–2.

END OF SECTION 26 0170

SECTION 26 0420 – SERVICE ENTRANCE

PART 1 – GENERAL

1.1 RELATED DOCUMENTS

AZ. Drawings and general provisions of Contract, including General and Supplementary Conditions and Division–1 Specification sections, apply to work of this section.

BA. Division–26 Basic Materials and Methods sections apply to work specified in this section.

1.2 DESCRIPTION OF WORK

BB. Extent of service–entrance work is indicated by drawings and schedules.

BC. Switchboards, panels, disconnects, transformers, etc., used for service–entrance equipment are specified in applicable Division–26 sections, and are included as work of this section.

BD. Consult local utility relative to all costs for line extensions, connections, etc., and include all costs for bringing service to the facility in base bid. Confirm location of point of service before bidding.

BE. Provide labor and materials as required to accomplish power company metering in accordance with power company standards and requirements.

BF. Provide concrete pads or vaults of size and type required for service transformers including any utility required primary conduit stub outs. Verify location, size, openings, reinforcing requirements with local utility before beginning work. Comply with local utility clearance requirements. Location of pads shown on the drawings are approximate only.

1.3 QUALITY ASSURANCE

BG. Comply with NEC and NEMA standards as applicable to construction and installation of service–entrance equipment and accessories. Provide service–entrance equipment and accessories which are UL–listed and labeled, and equipment marked, "Suitable for use as Service Equipment".

1.4 SUBMITTALS

BH. Product Data: Submit manufacturer's data on service–entrance equipment and accessories.

BI. Shop Drawings: Submit dimensioned layouts of service–entrance equipment and spatial relationships to proximate equipment.

BJ. Maintenance Stock, Fuses: For types and ratings required, furnish additional fuse, amounting to one unit for every 2 installed units, but not less than one unit of each.

PART 2 – PRODUCTS

2.1 SERVICE – ENTRANCE EQUIPMENT

BK. General: Provide service–entrance equipment and accessories of types, sizes, ratings and electrical characteristics indicated, which comply with manufacturer's standard materials, design and construction in accordance with published product information, and as required for complete installation, and as herein specified. Each service disconnect shall be marked to identify it as a service disconnecting means. Where more than one service disconnect is used, all disconnects shall be labeled as required by NEC.

2.2 OVERCURRENT PROTECTIVE DEVICES

BL. General: Provide overcurrent protective devices as indicated on drawings.

BM. Meter Sockets and Current Transformer cabinets: Provide meter sockets and current transformer cabinets which comply with requirements of local utility company supplying electrical power to service–entrance equipment of building project.

2.3 RACEWAYS AND CONDUCTORS

BN. General: Provide raceways and conductors complying with applicable Division–26 Basic Materials and Methods sections.

BO. Wall and Floor Seals: Provide wall and floor seals complying with Division–26 Basic Materials and Methods section "Raceways".

PART 3 – EXECUTION

3.1 INSTALLATION

BP. Provide and install an electric service to the facility as shown on the drawings and specified herein. The electrical contractor shall be responsible for any cost assessed by the serving utility to provide an electric service as shown on the plans and/or specified herein.

BQ. The service metering shall be as per the local power company or as specified herein.

BR. Construction Lighting and Power shall be arranged for as specified under the General Conditions.

BS. Before purchase of any service entrance equipment the contractor shall review with the power company the proposed service as shown on the drawings and the probable date when the service connection from the power company will be needed.

BT. Transformer Pad: The electrical contractor shall be responsible to confirm the transformer pad & specifications, and clearance from other equipment and structures with the serving power company before beginning installation.

BU. Installation of Service–entrance Equipment: Install service–entrance equipment as indicated, in accordance with equipment manufacturer's written instructions, and with recognized industry practices, to ensure that service–entrance equipment fulfills requirements. Comply with applicable installation requirements of NEC and NEMA standards.

BV. Coordinate with other work, including utility company wiring, as necessary to interface installation of service–entrance equipment work with other work.

BW. Install all floor standing service equipment on 4" high concrete curb and bolt equipment to curb with 5/8" anchors at each corner and at intervals not to exceed 48" along perimeter. Install wiring trench under floor standing equipment; 12" deep, and 4" smaller in length and width than equipment base. Install grounding bushings on conduits penetrating trench.

BX. Grounding: Provide system and equipment grounding and bonding connections for service–entrance equipment and conductors, as required.

BY. Adjust and clean: Adjust operating mechanisms for free mechanical movement.

BZ. Touch–up scratched or marred enclosure surfaces to match original finishes.

CA. Provide a neutral from the service transformer to all main service disconnects including 3 phase service disconnects for motor circuits whether or not they are shown on the drawings.

CB. Provide bonding bushings on all conduits.

CC. Field Quality Control: Upon completion of installation of service–entrance equipment and electrical circuitry, energize circuitry and demonstrate capability and compliance with requirements. Where possible, correct malfunctioning units at site, then retest to demonstrate compliance; otherwise, remove and replace with new units, and proceed with retesting.

END OF SECTION 26 0420

SECTION 26 0452 – GROUNDING

PART 1 – GENERAL

1.1 RELATED DOCUMENTS

CD. Drawings and general provisions of Contract, including General and Supplementary Conditions and Division–1 Specification sections, apply to work of this section.

CE. Division–26 Basic Materials and Methods sections apply to work specified in this section.

1.2 DESCRIPTION OF WORK

CF. Provide grounding as specified herein, and as indicated on drawings.

CG. Types of grounding in this section include the following:
15. Underground metal water piping
16. Metal building frames
17. Grounding electrodes
18. Grounding rods
19. Service equipment
20. Enclosures
21. Systems
22. Equipment
23. Other items indicated on drawings

CH. Requirements of this section apply to electrical grounding work specified elsewhere in these specifications.

1.3 QUALITY ASSURANCE

CI. Comply with NEC as applicable to electrical grounding and ground fault protection systems. Comply with applicable ANSI and IEEE requirements. Provide products which have been UL listed and labeled.

1.4 SUBMITTALS

CJ. None required.

PART 2 – PRODUCTS

2.1 GROUNDING

CK. Materials and Components: General: Except as otherwise indicated, provide each electrical grounding system as specified herein, and as shown on drawings, including but not necessarily limited to, cables/wires, connectors, terminals (solderless lugs), grounding rods/electrodes and plate electrodes, bonding jumper braid, and other items and accessories needed for complete installation.

CL. Where Materials or Components are not otherwise indicated, comply with NEC, NEMA and established industry standards for applications indicated.

CM. Electrical Grounding Conductors: Unless otherwise indicated, provide electrical grounding conductors for grounding connections matching power supply wiring materials and sized according to NEC.

CN. Ground Rods: Steel with copper welded exterior, 3/4" dia x 10'.

CO. Footing Ground: Install 20 ft. of #4 bare copper wire in footings and connect to footing rebar.

PART 3 – EXECUTION

3.1 GENERAL

CP. The electrical service entrance and conduit system throughout the project shall be grounded as required by N.E.C. Connect to all available electrodes per N.E.C. 250–50.

CQ. All rotating equipment shall be grounded in compliance with the N.E.C.

CR. All plastic conduit runs shall include a grounding conductor as per N.E.C. requirements. Conduit sizes shown are for steel conduit. If plastic conduit is used the contractor shall verify conduit size to accommodate the required grounding conductor.

CS. Provide full size ground in each conduit of parallel conduit systems per N.E.C. 250–122.

CT. Separate neutrals shall be installed on all GFI breakers.

3.2 INSTALLATION OF GROUNDING SYSTEMS

CU. Install electrical grounding systems in accordance with manufacturer's written instructions and with recognized industry practices to ensure grounding devices comply with requirements.

CV. Install braided type bonding jumpers with ground clamps on water meter piping to electrically bypass water meter.

CW. Install clamp–on connectors only on thoroughly cleaned and metal contact surfaces, to ensure electrical conductivity and circuit integrity.

CX. Provide grounding for the entire raceway, enclosure, equipment and device system in accordance with NEC. All non–metallic raceways shall include copper grounding conductor sized in accordance with NEC.

CY. Provide service entrance grounding by means of ground rods (quantity of two, driven exterior to building), by means of bonding to water main, by means of bonding to building structural steel, and by means of footing ground. Drive ground rods a minimum of 15 ft. apart.

CZ. Provide grounding conductors for dimming systems in accordance with manufacturer's requirement.

DA. Install bonding bushings on all main service and feeder conduit terminations where metallic conduit connects to panels, wireways, etc.

DB. Grounding electrode conductors shall be bonded to the exterior of the service equipment cabinet and interior through the grounding buss bonding strap. If metallic protection conduit is used over the grounding electrode conductor it shall be bonded to the grounding electrode at the point of entrance with a UL approved fitting. The conduit shall be continuous from the point of conductor entry to the service equipment cabinet where the conduit shall penetrate the cabinet and be secured with double lock nuts. The secondary conductor raceway between the transformers and the service equipment shall not be bonded to the transformer primary and secondary grounding system at the transformer and shall be electrically isolated from the transformer enclosures and ground system.

DC. See drawings for additional grounding requirements.

END OF SECTION 26 0452

SECTION 26 0510 – INTERIOR AND EXTERIOR BUILDING LIGHTING

PART 1 – GENERAL

1.1 RELATED DOCUMENTS

A. Drawings and general provisions of Contract, including General and Supplementary Conditions and Division–1 Specification sections, apply to work of this section.

B. Division–26 Basic Materials and Methods sections apply to work specified in this section.

1.2 DESCRIPTION OF WORK

C. Extent of interior and exterior lighting fixture work is indicated by drawings and schedules.

D. Types of lighting fixtures in this section include the following:
1. LED

1.3 QUALITY ASSURANCE

E. Comply with NEC, NEMA and ANSI 132.1 as applicable to installation and construction of lighting fixtures. Comply with NEC 410–64C for all recessed incandescent light fixtures. Provide lighting fixtures which have been UL–listed and labeled.

F. CBM Labels: Provide fluorescent–lamp ballasts which comply with Certified Ballast Manufacturers Association standards and carry the CBM label.

1.4 SUBMITTALS

G. Product Data: Submit manufacturer's data on interior and exterior building lighting fixtures.

H. Shop Drawings: Submit dimensioned drawings of lighting fixtures. Submit fixture shop drawings in booklet form with separate sheet for each fixture, assembled in luminaire "type" numerical order, with proposed fixture and accessories clearly indicated on each sheet.

PART 2 – PRODUCTS

2.2 INTERIOR AND EXTERIOR LIGHTING FIXTURES

I. General: Provide lighting fixtures, of sizes, types and ratings indicated complete with, but not necessarily limited to, housings, lamps, lamps holders, reflectors, ballasts, starters, and wiring. Label each fixture with manufacturer's name and catalog number. Provide all enclosed fixtures with positive latch mechanisms; spring tension clips not acceptable. Provide all exterior fixtures with damp or wet location label as required by application.

J. Outdoor light fixtures: Recessed soffit lights and entrance lights shall be provided as noted on the plans and in compliance with the conditions heretofore covered.

K. Emergency light battery packs shall be connected to the same circuit that the serves the light fixture it is in, and connected so as to be able to operate in the test mode when the normal switch leg is turned on and unless noted otherwise on the drawings shall illuminate 1 lamp for a total of 1,100 lumens. Radiant SNC 842 or engineer approved equal.

L. Where the light fixture schedule indicates "Color per Architect" this shall be interpreted as requiring a non–standard color.

M. Support Requirements: Provide all pendant and stem hung fixtures with flexible ball joint hangers rated for seismic zone 3 at all points of support. Equip hooks used to hang fixtures with safety latches. Provide all detachable fixture parts, luminous ceiling accessories, louvers, diffusers, lenses, and reflectors with locking catches, screws, safety chain, or safety cable.

N. Diffusers: Where plastic diffusers are specified, provide 100 percent virgin acrylic compound; minimum thickness, .125 inches. Provide a spare set of diffusers (acrylic and/or glass only) for each fixture type and one for each additional 10 fixtures of each type; not to exceed 10 spares for any single fixture type.

PART 3 – EXECUTION

3.1 INSTALLATION OF LIGHTING FIXTURES:

V. Install lighting fixtures at locations and heights as indicated, in accordance with fixture manufacturer's written instructions, applicable requirements of NEC, NECA's "Standard of Installation", NEMA standards, and with recognized industry practices to ensure that lighting fixtures fulfill requirements.

W. Seismic bracing: Provide galvanized chain braces on all chain pendant hung light fixtures (pendant length greater than 12") to prevent swaying in any direction. On continuous row installations provide "4 direction" bracing every 16 feet.

X. All recessed light fixtures mounted in fire rated ceiling (See architectural drawings) shall have a fire rated cover installed over them per the ceiling manufacturers recommendation, and shall have ballasts approved for installation under such covers.

Y. Coordinate with other work as appropriate to properly interface installation of lighting fixtures with other work. Consult architectural reflected ceiling plan for exact location of all lighting fixtures.

Z. Provide all necessary supports, brackets, and miscellaneous equipment for mounting of fixtures. Support all ceiling mounted fixtures from the building structure, independent of the ceiling system, unless noted. Support each recessed T–bar mount fixture (fluorescent incandescent, and/or HID) from the building structure with #10 ga. steel wire attached to each corner (in addition to supports normally provided for attachment to the ceiling system). Provide backing supports above (or behind) sheetrock, plaster and similar ceiling and wall materials. Support surface mounted ceiling fixtures from channel. Support ceiling mounted outlet boxes independent of the raceway system, and capable of supporting 200 pounds. See plans for additional details.

AA. Fixture support by toggle bolts through sheetrock is not acceptable.

AB. Coordination Meetings: Meet with the General Contractor and the ceiling installer before submittal of shop drawings to coordinate each light fixture mounting condition with ceiling type and thickness. Coordinate fixture layout in each area. Adjust fixture mount as required by thickness of ceiling for proper fixture trim installation

AC. Meet with Mechanical: Meet with the mechanical installer prior to fabrication and installation of duct work. Coordinate depth and location of all recessed fixtures and duct work in all areas.

AD. Adjust and Clean: The contractor shall take care to keep all light fixtures and lenses clean during construction. The engineer will require all dusty or dirty fixtures and lenses to be cleaned for final construction review.

AE. Protect installed fixtures from damage during remainder of construction period. Repair all nicks and scratches to appearance of original finish.

3.2 FIELD QUALITY CONTROL

AF. Upon completion of installation of lighting fixtures, and after building circuitry has been energized, apply electrical energy to demonstrate capability and compliance with requirements. Where possible, correct malfunctioning units at site, then retest to demonstrate compliance; otherwise remove and replace with new units, and proceed with retesting.

AG. At the time of Substantial Completion, replace lamps in interior lighting fixtures which are observed to be noticeably dimmed after the Contractor's use and testing, as judged by Architect/Engineer. In addition, furnish stock or replacement lamps amounting to 15 percent (but not less than one lamp) of each type and size used. Deliver replacement stock as directed to Owner's storage space.

AH. Grounding: Provide light equipment grounding connections for each lighting fixture.

AI. Meet with the General Contractor before the submittal of shop drawings to coordinate each light fixture mounting condition with ceiling type and thickness. Adjust fixture type or mount as required by ceiling type or thickness for proper installation.

AJ. Wall pack HID fixtures operating at 277V or 480V must be located a minimum of 36" from doors or windows.

END OF SECTION 26 0510

SECTION 26 0740 – TELEPHONE AND COMPUTER (RACEWAYS)

PART 1 – GENERAL

1.1 RELATED DOCUMENTS

AK. Drawings and general provisions of Contract, including General and Supplementary Conditions and Division–1 Specification sections, apply to work of this section.

AL. Division–26 Basic Materials and Methods sections apply to work specified in this section.

1.2 DESCRIPTION OF WORK

AM. Extent of telephone and computer system work is indicated by drawings and is hereby defined to include, but not be limited to raceway, j–boxes, outlets, device plates, backboards, cabinets, grounding and miscellaneous items required for complete raceway system.

AN. Refer to other Division–26 sections for requirements for raceways, trays, boxes and fittings, wiring devices (plates), and supporting devices, and other sections, as applicable.

1.3 QUALITY ASSURANCE

AO. Comply with applicable portions of NEC as to type products used and installation of components. Provide products and materials which have been UL–listed and labeled.

PART 2 – PRODUCTS

AP. General: Provide complete raceway system for telephone and computer including but not limited to, raceway, j–boxes, outlets, device plates, backboards, cabinets, grounding and miscellaneous items as required.

AQ. Provide plywood terminal backboards, 3' x 8' x 3/4" unless noted otherwise.

PART 3 – EXECUTION

3.1 INSTALLATION OF TELEPHONE AND COMPUTER RACEWAY SYSTEM

AR. General: Install raceway system as indicated to comply with NEC and recognized industry practices. Run 3/4" conduit from each outlet to terminal backboard, tray, or terminal cabinet or as otherwise noted. Provide nylon pull cord in all installed raceways. Install cover plates.

END OF SECTION 26 0740

LICENSED PROFESSIONAL ENGINEER
No. 178785
DAVID W. BEAZER
6.6.2024
STATE OF UTAH

BEAZER ENGINEERING INC.
P.O. BOX 652
MILLVILLE, UTAH 84326
C 435.770.8999
david@beazer-engineering.com

DATE
June 6, 2024

PROJECT TITLE
HOBBLED DOG CIDERY
625 West 8300 South
Paradise, Utah 84238

SHEET TITLE
ELECTRICAL SPECIFICATIONS
SCALE: NA

PROJECT NUMBER

REVISIONS

SHEET NUMBER
ESP102

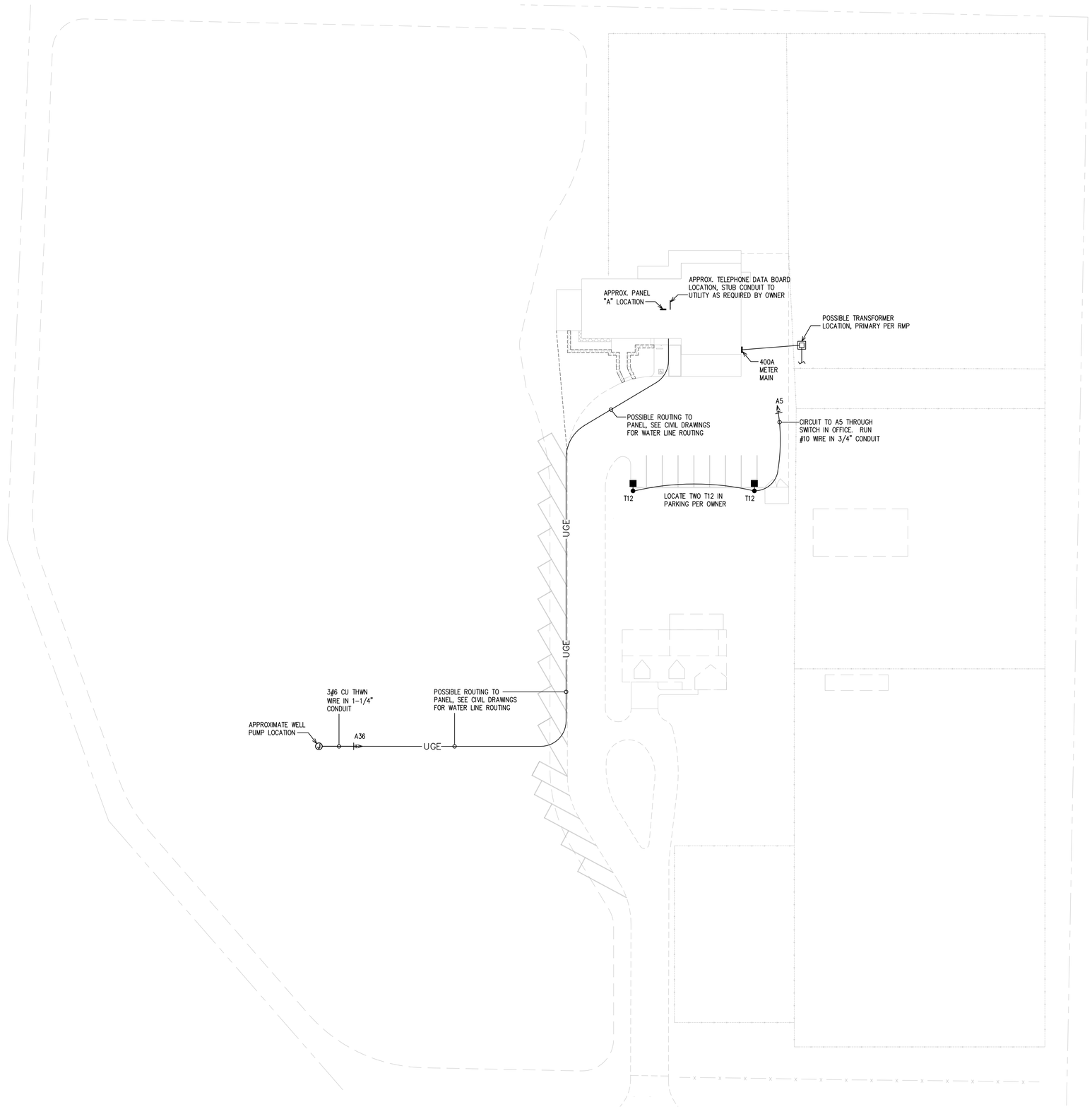

LICENSED PROFESSIONAL ENGINEER
No. 178785
DAVID W. BEAZER
6.6.2024
STATE OF UTAH

BEAZER ENGINEERING INC.
P.O. BOX 652
MILLVILLE, UTAH 84326
C 435.770.8999
david@beazer-engineering.com

DATE
June 6, 2024

PROJECT TITLE
HOBBLED DOG CIDERY
625 West 8300 South
Paradise, Utah 84238

SHEET TITLE
SITE ELECTRICAL PLAN
SCALE: 1/32"=1'-0"

PROJECT NUMBER

REVISIONS

SHEET NUMBER
ES101

LIGHT FIXTURE SCHEDULE

TYPE	MANUFACTURER/CATALOG NO.	MOUNTING	LAMPS
T1	LITHONIA STL4 20L MVOLT GZ10 LP835 CBA	SURFACE	LED (20W)
T1E	SAME AS T1 WITH EL14L EMERGENCY BATTERY PACK	SURFACE	LED (20W)
T2	LITHONIA STL4 40L MVOLT GZ10 LP835 CBA	SURFACE	LED (35W)
T2E	SAME AS T2 WITH EL14L EMERGENCY BATTERY PACK	SURFACE	LED (35W)
T3	LITHONIA STL4 48L MVOLT GZ10 LP835 CBA	SURFACE	LED (45W)
T4	LITHONIA IBHST 9000LM SD080 MD MVOLT 0Z10 35K 80CRI CORD SET AS REQUIRED, CBA	CHAIN SUSPEND AS HIGH AS POSSIBLE	LED (79W)
T4E	SAME AS T4 WITH BSL20HV EMERGENCY BATTERY PACK	CHAIN SUSPEND AS HIGH AS POSSIBLE	LED (79W)
T5	GOTHAM EVO6 35/05 AR LSS WD MVOLT GZ10 VERY FIT IN SPACE SHOWN	RECESS	LED (6W)
T5E	SAME AS T5 WITH 600 LUMEN REMOTE, INTERIOR, MOUNT EMERGENCY BATTERY PACK	RECESS	LED (6W)
T6	GOTHAM EVO6 35/10 AR LSS WD MVOLT GZ10	RECESS	LED (10W)
T6E	SAME AS T6 WITH EL EMERGENCY BATTERY PACK	RECESS	LED (10W)
T7	LITHONIA CLX L48 3000LM SEF FDL MVOLT EZ1 35K 80CRI CBA	SURFACE	LED (19W)
T7E	SAME AS T7 WITH E10WLCP EMERGENCY BATTERY PACK	SURFACE	LED (19W)
T8	SPECTRUM SW1910GV-55L-35K-EX-TF2-CEILING MOUNT AS REQUIRED-CBA	PENDANT, +9'6" ABOVE FLOOR	LED (39W)
T8E	SAME AS T8 WITH EMRM 7W REMOTE EM BATTERY PACK	PENDANT, +9'6" ABOVE FLOOR	LED (39W)
T9	LITHONIA LQM S W 3 G MVOLT ELN SD, FACES AS REQ.	AS SHOWN	LED (1W)
T10	WALL ABOVE MIRROR PER ARCHITECT/OWNER, $500 ALLOWANCE	WALL ABOVE MIRROR	LED (20W)
T11	OUTSIDE WALL PER ARCHITECT/OWNER, $500 ALLOWANCE	WALL, HEIGHT PER ARCHITECT	LED (15W)
T11E	SAME AS T11 WITH 600 LUMEN REMOTE, INTERIOR MOUNT EMERGENCY BATTERY PACK	WALL, HEIGHT	LED (15W)
T12	LITHONIA DSXO P1 30K 70CRI T3LG MVOLT CBA, 15FT. POLE CBA	POLE, POLE BASE	LED (33W)

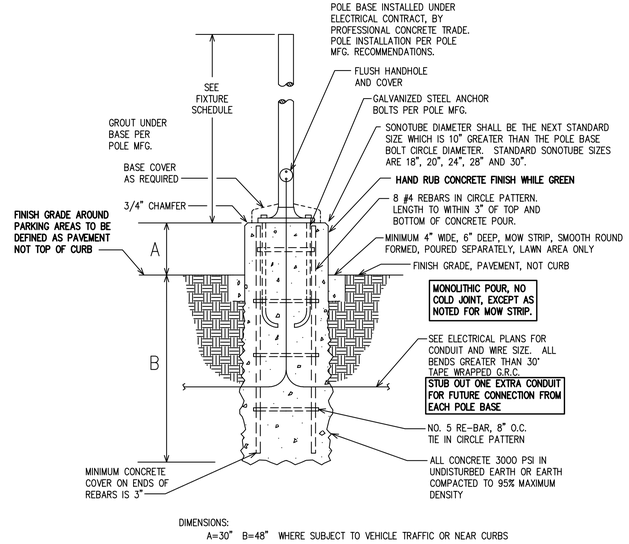

DIMENSIONS:
A=30" B=48" WHERE SUBJECT TO VEHICLE TRAFFIC OR NEAR CURBS

POLE BASE DETAIL

NO SCALE

KEYED NOTES (#)

1. RUN OUTDOOR LIGHT CIRCUIT THROUGH SQUARE D CLASS 8903 TYPE LG60 NEMA 1 CONTACTOR ADJACENT TO PANEL. CONTROL THE CONTACTOR BY PHOTOCELL "ON" AND TIME CLOCK "OFF". USE TORK DGLC100A-NC TIME CLOCK ADJACENT TO CONTACTOR. LOCATE TORK EPC-A PHOTOCELL OUTSIDE OF BUILDING AWAY FROM ANY LIGHT SOURCE OR DIRECT SUNLIGHT. INSTALL MANUAL OVERRIDE TOGGLE 6HR TIME SWITCH ADJACENT TO CONTACTOR. TIME CLOCK MUST RETAIN TIME AND PROGRAM SETTINGS ON LOSS OF POWER FOR AT LEAST 10 HOURS.
2. THIS FIXTURE TO HAVE REMOTE, INTERIOR MOUNT, EMERGENCY BATTERY PACK. PULL EXTRA HOT AS REQUIRED.
3. VACANCY SENSOR SWITCH, MANUAL ON, AUTO OFF, PER 2015 IECC C405.2.1.1. WATTSTOPPER DSW-301 OR EQUAL.
4. CEILING MOUNT OCCUPANCY SENSOR. AUTO ON, AUTO OFF. WATTSTOPPER DT300 SENSOR(S) WITH BZ-150 POWER PACK(S) SET TO OCCUPANCY SETTING. SENSOR(S) TO CONTROL ALL LIGHTS IN ROOM UNLESS SHOWN OTHERWISE. INSTALL PER MANUFACTURER WIRING DIAGRAMS. PROVIDE BZ-150 POWER PACK AT EACH SEPARATELY SWITCHED LOCATION.
5. WATT STOPPER HB300 SERIES HIGHBAY SENSORS AND POWER PACKS AS REQUIRED TO OPERATE ALL LIGHTS IN ROOM UNLESS SHOWN OTHERWISE. SENSOR(S) TO HAVE 20FT. BY 40FT. COVERAGE PATTERN AT 30FT. MOUNTING HEIGHT. SET SENSITIVITY AND TIME DELAY AT MAXIMUMS.
6. PROVIDE CIRCUIT FOR LED TAPE STRIP LIGHTS IN DISPLAY BOXES ABOVE COUNTER. SEE ARCHITECTURAL.
7. CONNECTION TO LOGO SPOT LIGHT PER OWNER/ARCHITECT.
8. STUB 3/4" CONDUIT TO SWITCH LOCATION AND ON TO PANEL "B" FOR FUTURE FAN.

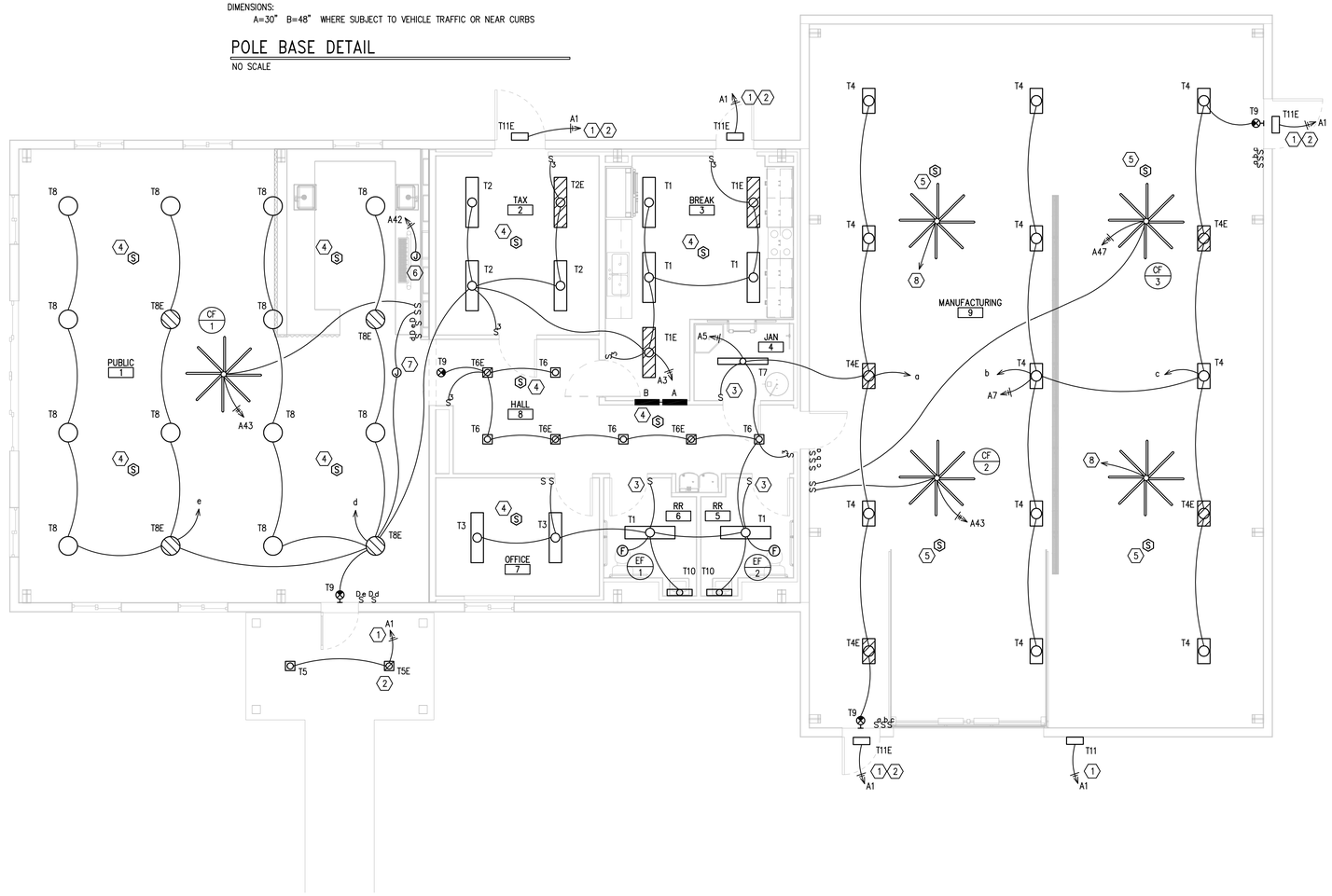

BEAZER ENGINEERING INC.
P.O. BOX 652
MILLVILLE, UTAH 84326
C 435.770.8999
david@beazer-engineering.com

DATE
June 6, 2024

PROJECT TITLE
HOBBLED DOG CIDERY
625 West 8300 South
Paradise, Utah 84238

SHEET TITLE
LIGHTING PLAN
SCALE: 3/16"=1'-0"

PROJECT NUMBER

REVISIONS

SHEET NUMBER
E101

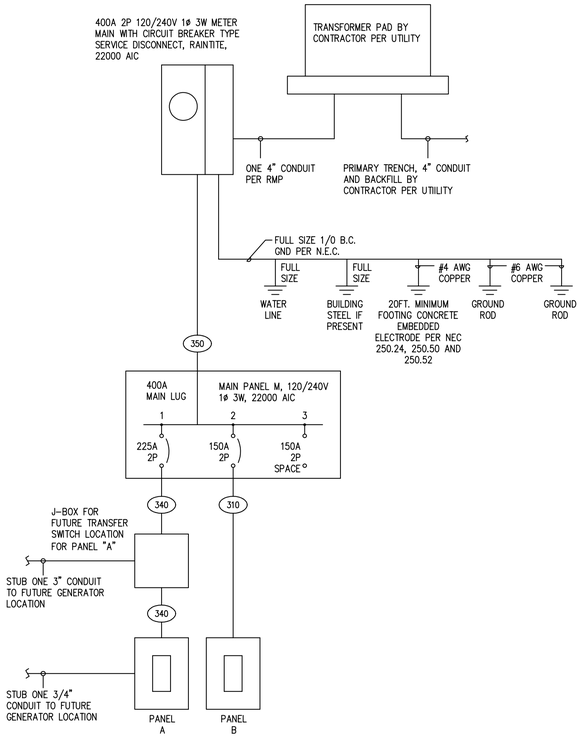

ONE LINE DIAGRAM

PANEL B [X] NEW [ ] EXISTING TYPE NQOD 1 ø 3 WIRE 120/240 VOLTS
[ ] Bolt on breakers
[ ] Isolated ground bus
REMARKS
LOCATION: BREAK
MOUNTING: [X] flush [ ] surface
150 amp. main
[X] lugs [ ] breaker

No.	BRKR A	BRKR P	CIRCUIT DESCRIPTION	L	O	M	Wire	CIRC. LOAD	PHASE A	PHASE B	CIRC. LOAD	Wire	L	O	M	CIRCUIT DESCRIPTION	BRKR A	BRKR P	No.
1	50	2	CU/1			1	6	3100	5900		2800	6			1	CU/2	50	2	2
3	–	–	–					3100		5900	2800	6				–	–	–	4
5	50	2	CU/3			1		3100	3300		200	12			1	FRONT COUNTER DISHWASHER	20	1	6
7	–	–	–					3100		4300	1200			1		HAND DRYER			8
9	20	1	SPARE						1200		1200			1		HAND DRYER			10
11																SPARE			12
13																			14
15																			16
17																SPACE			18
19																			20
21			SPACE																22
23																			24
25																			26
27																			28
29																			30
31																			32
33																			34
35																			36
37																			38
39																			40
41																			42

FEEDER 310
TOTALS 10400 10200
AMPS/PHASE 87 85
AIC 22000
parallel runs 1

PANEL A [X] NEW [ ] EXISTING TYPE NQOD 1 ø 3 WIRE 120/240 VOLTS
[ ] Bolt on breakers
[ ] Isolated ground bus
REMARKS
LOCATION: BREAK
MOUNTING: [X] flush [ ] surface
225 amp. main
[ ] lugs [X] breaker

No.	BRKR A	BRKR P	CIRCUIT DESCRIPTION	L	O	M	Wire	CIRC. LOAD	PHASE A	PHASE B	CIRC. LOAD	Wire	L	O	M	CIRCUIT DESCRIPTION	BRKR A	BRKR P	No.
1	20	1	OUTSIDE BUILDING LIGHTS	X			12	95	1895		1800	12		1		COMPRESSOR	20	1	2
3			PUBLIC/TAX/BREAK	X				1105		3005	1900	10			1	APPLE MILL	30	2	4
5			OFFICE/HALL/RR/PARTIAL MANU.	X		3		1140	3040		1900					–	–	–	6
7			MANUFACTURING/MEZZ	X				1000		2900	1900				1	JUICER	30	2	8
9					4			800	2700		1900					–	–	–	10
11					3			600		1000	400	12		2		BREAK COUNTER	20	1	12
13					3			600	1000		400			2					14
15					3			600		1200	600			3					16
17					3			600	1000		400			2					18
19			OVERHEAD DOOR			1		500		700	200			1		DISPOSAL			20
21			SPARE						200		200			1		DISHWASHER			22
23			JAN/RR/HALL/MEZZ		6		12	1200		1400	200			1		FRIDGE			24
25			OFFICE		4			800	1000		200			1		MICROWAVE			26
27			PUBLIC		3			600		4600	4000	6		1		RANGE	50	2	28
29					3			600	4600		4000	6				–	–	–	30
31					4			800		1600	800	12		4		TAX	20	1	32
33			PUBLIC COUNTER		2			400	1000		600	12		3		TAX	20	1	34
35					2			400		1750	1350	6			1	WELL PUMP	20	2	36
37					3			600	1950		1350	6				–	–	–	38
39			F/1			1		1200		2400	1200	12			1	F/3	20	1	40
41			F/2			1		1200	1300		100	12			1	LIGHT BOXES			42
43	20	2	CF/1 CF/2			2		960		1360	400	12			2	KEGERATORS			44
45	–	–	– –					960	1160		200	12		1		CHLORINATOR OUTLET			46
47	20	2	CF/3			1		960		960						SPARE			48
49	–	–	–					960	960							SPARE			50
51	20	1	WH/1 DCP/1			2		1000		1775	775	12			1	BOOSTER PUMP	20	2	52
53	20	1	TEL BOARD		1			200	975		775	12				–	–	–	54

FEEDER 340
TOTALS 22780 24650
AMPS/PHASE 190 205
AIC 22000
parallel runs 1

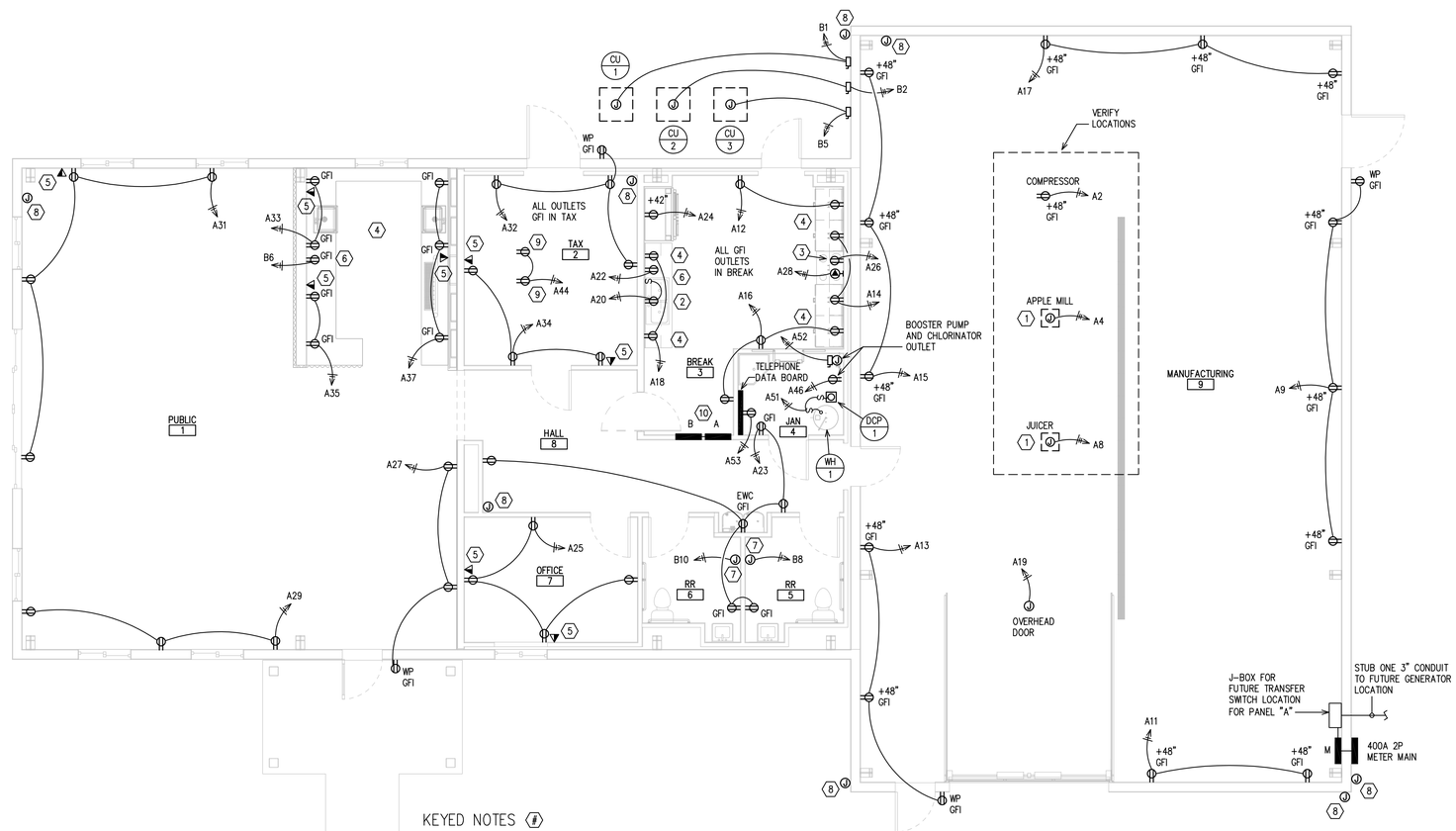

SERVICE ENTRANCE & FEEDER CONDUIT–CONDUCTOR SCHEDULE FOR COPPER CONDUCTORS

TYPE	CONDUCTOR QUAN.	CONDUCTOR SIZE	COND SIZE	AMP	INSULATION
20	2	10	3/4	30	THHN, THWN, XHHW
30	3				
40	4				
28	2	8		40	
38	3		1		
48	4				
26	2	6		55	
36	3				
46	4		1 1/4		
34	3	4		70	
44	4				
33	3	3		85	
43	4				
311	3	1	1 1/2	110	
411	4		2		
310	3	1/0		150	
410	4				
320	3	2/0		175	
420	4				
330	3	3/0		200	
430	4		2 1/2		
340	3	4/0		230	
440	4				
325	3	250		255	
425	4		3		
335	3	350		310	
435	4				
350	3	500	3 1/2	380	
450	4				

PROVIDE GROUND IN ALL CONDUITS PER N.E.C. SIZE ACCORDING TO SERVICE OR EQUIPMENT GROUNDING TABLES, DEPENDING ON USE. EACH PARALLEL CONDUIT TO INCLUDED FULL SIZE GROUND. ALL CONDUCTOR SIZES ARE FOR COPPER.

KEYED NOTES (#)

1. CONNECT TO UNIT FURNISHED VFD WITH INTEGRAL DISCONNECT.
2. DISPOSAL. LOCATE OUTLET BELOW AND SWITCH ABOVE.
3. MICROWAVE ABOVE RANGE. LOCATE OUTLET IN CABINET ABOVE, SEE ARCHITECTURAL.
4. LOCATE OUTLET(S) ABOVE COUNTER, SEE ARCHITECTURAL.
5. TELEPHONE/DATA OUTLET. J-BOX WITH 3/4" CONDUIT STUBBED TO TELEPHONE BOARD OR AS REQUIRED BY OWNER. DATA CABLES AS REQUIRED BY OWNER.
6. DISHWASHER. OUTLET TO BE IN ADJACENT CABINET ACCESSIBLE SPACE. VERIFY DISHWASHER LOCATION.
7. ELECTRIC HAND DRYER. SEE SHOP DRAWINGS FOR CONDUIT ENTRY LOCATION. VERIFY HAND DRYER LOCATION.
8. SECURITY J-BOX FOR CAMERA WITH 3/4" CONDUIT STUB TO ACCESSIBLE CEILING SPACE OR AS REQUIRED BY OWNER.
9. KEGERATOR, LOCATION AS REQUIRED.
10. INSTALL THREE 3" NIPPLES BETWEEN PANELS A AND B FOR SWAPPING LOADS

LICENSED PROFESSIONAL ENGINEER
No. 178785
DAVID W. BEAZER
6.6.2024
STATE OF UTAH

BEAZER ENGINEERING INC.
P.O. BOX 652
MILLVILLE, UTAH 84326
C 435.770.8999
david@beazer-engineering.com

DATE
June 6, 2024

PROJECT TITLE
HOBBLED DOG CIDERY
625 West 8300 South
Paradise, Utah 84238

SHEET TITLE
POWER PLAN
SCALE: 3/16"=1'-0"

PROJECT NUMBER

REVISIONS

SHEET NUMBER
E201

MECHANICAL EQUIPMENT SCHEDULE

SYM	DESCRIPTION	LOAD	VOLTS	PHASE	FIRE ALARM SHUTDOWN	CONTROL CIRCUIT BY	* STARTER BY	SAFETY DISCONNECT BY	REMARKS
F/1	FURNACE FAN	1/2HP	120	1	NA	MECH	MECH	ELEC	
F/2	FURNACE FAN	1/2HP	120	1	NA	MECH	MECH	ELEC	
F/3	FURNACE FAN	1/2HP	120	1	NA	MECH	MECH	ELEC	
CU/1	CONDENSING UNIT	25.7A	240	1	NA	MECH	MECH	ELEC	
CU/2	CONDENSING UNIT	23.5A	240	1	NA	MECH	MECH	ELEC	
CU/3	CONDENSING UNIT	25.7A	240	1	NA	MECH	MECH	ELEC	
EF/1	EXHAUST FAN	113W	120	1	NA	ELEC	–	MECH	
EF/2	EXHAUST FAN	113W	120	1	NA	ELEC	–	MECH	
CF/1	CEILING FAN	42W	240	1	NA	ELEC	MECH	ELEC	
CF/2	CEILING FAN	1HP	240	1	NA	ELEC	MECH	ELEC	
CF/3	CEILING FAN	1HP	240	1	NA	ELEC	MECH	ELEC	
DCP/1	DOMEST RECIRC PUMP	1/4HP	120	1	NA	MECH	MECH	ELEC	
WH/1	WATER HEATER	3A	120	1	NA	MECH	MECH	ELEC	

FINAL BREAKER OR FUSE SIZE PER MANUFACTURER.

* ELECTRICAL CONTRACTOR VERIFY SINGLE SPEED OR TWO SPEED STARTERS WITH MECHANICAL DRAWINGS.

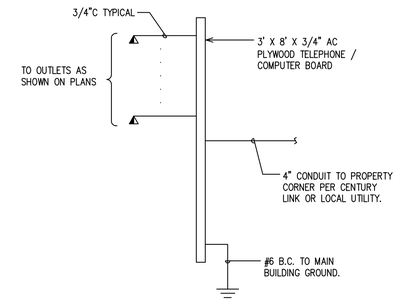

TELEPHONE RISER

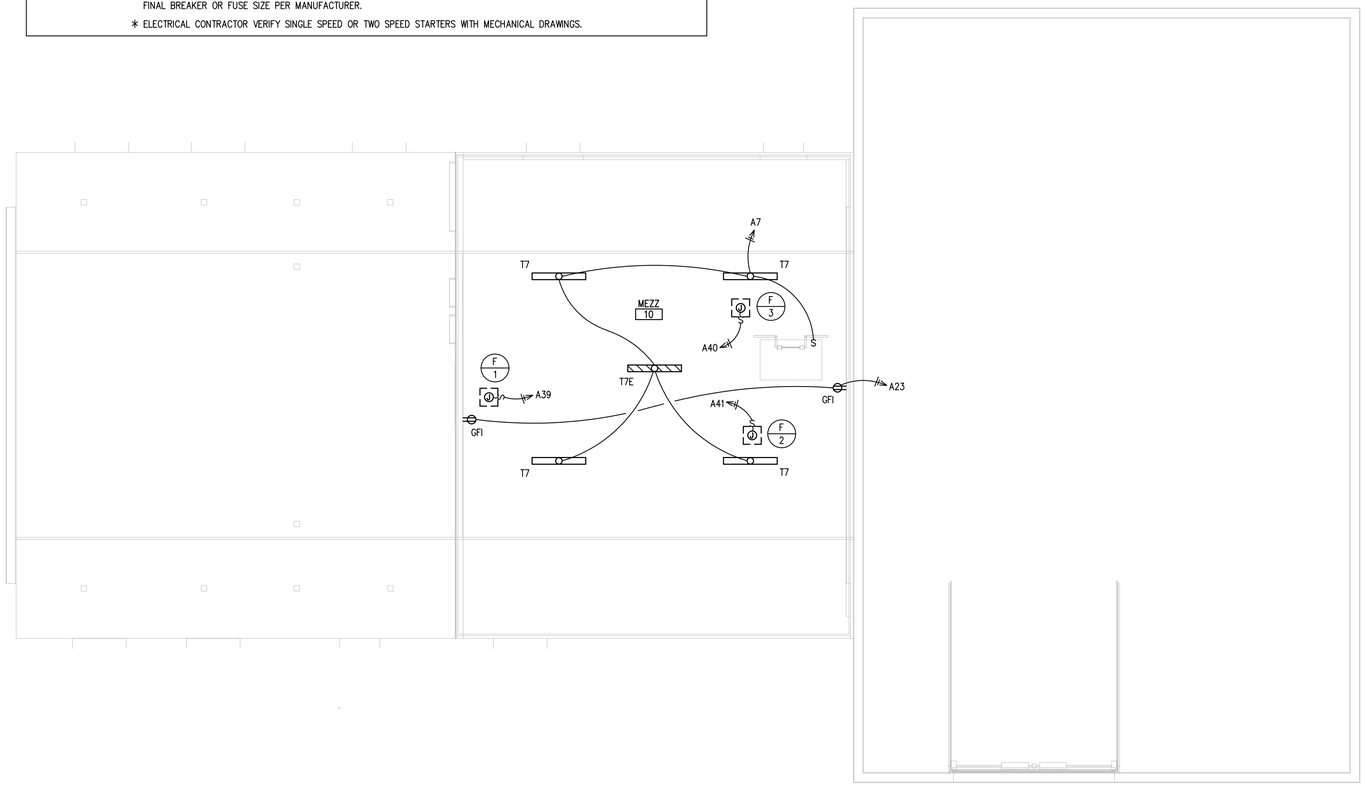

LICENSED PROFESSIONAL ENGINEER
No. 178785
DAVID W. BEAZER
6.6.2024
STATE OF UTAH

BEAZER ENGINEERING INC.
P.O. BOX 652
MILLVILLE, UTAH 84326
C 435.770.8999
david@beazer-engineering.com

DATE
June 6, 2024

PROJECT TITLE
HOBBLED DOG CIDERY
625 West 8300 South
Paradise, Utah 84238

SHEET TITLE
MEZZANINE ELECTRICAL PLAN
SCALE: 3/16"=1'-0"

PROJECT NUMBER

REVISIONS

SHEET NUMBER
E202

HOBBLED DOG CIDERY PROJECT

BENJAMIN KUETHE
PARADISE, UT
2024

AREA MAP

NOT TO SCALE

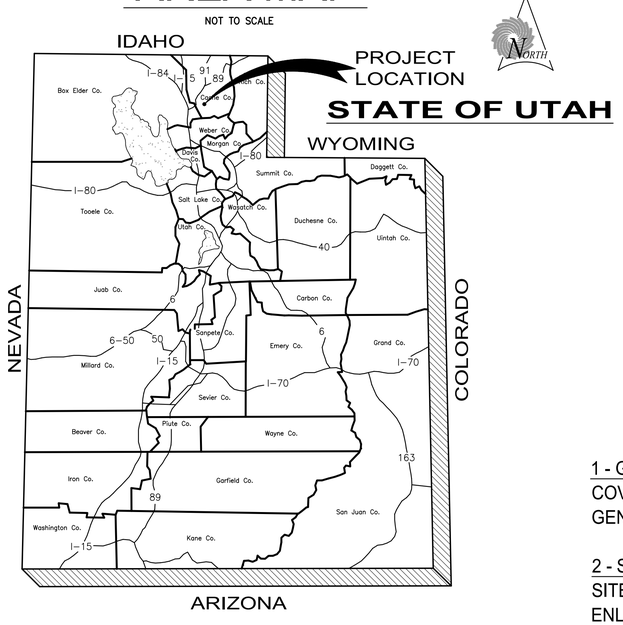

PROJECT SHEET INDEX

	DWG. NO.	SHEET NO.
1 - GENERAL:		
COVER SHEET	GN1	1
GENERAL NOTES, LEGEND AND ABBREVIATIONS	GN2	2
2 - SITE PLAN:		
SITE PLAN	SP1	3
ENLARGED PLAN	SP2	4
TURN AROUND PLAN	SP3	5
3 - DETAILS:		
DETAILS	D1	6
5 - SWPPP:		
SWPPP SITE PLAN	SW1	7
SWPPP DETAILS	SW2	8

LOCATION MAP

NOT TO SCALE

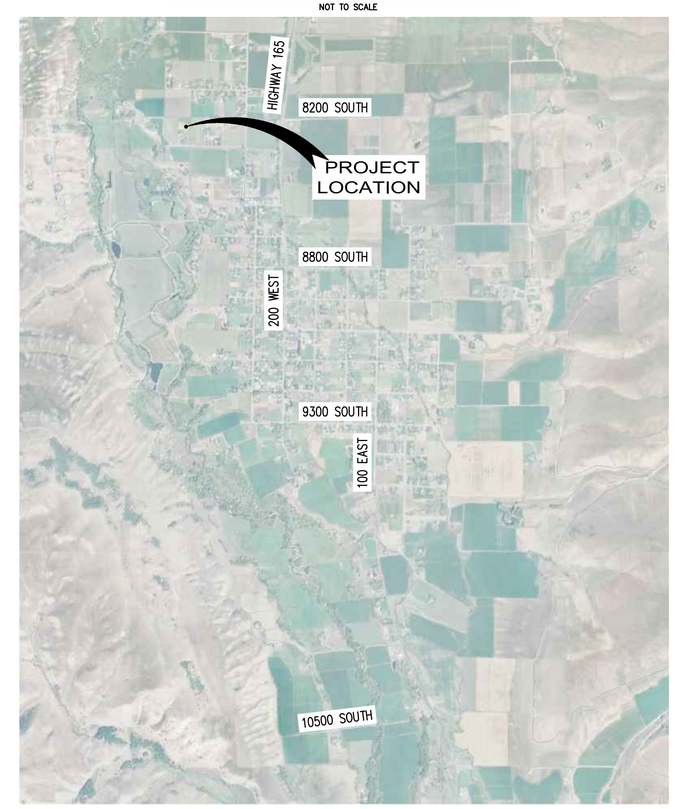

PARADISE, UT

LICENSED PROFESSIONAL ENGINEER
No. 12401899
Steven David Wood
06/03/2024
STATE OF UTAH

PREPARED BY:
SUNRISE ENGINEERING
SUNRISE ENGINEERING
2100 NORTH MAIN STREET
NORTH LOGAN, UTAH 84341
TEL (435) 563-3734
www.sunrise-eng.com

SE GENERAL NOTES

1. ALL SITE WORK SHALL CONFORM TO THE CURRENT EDITION OF THE AMERICAN PUBLIC WORKS ASSOCIATION UNIFORM STANDARD SPECIFICATIONS AND DETAILS (APWA SPECIFICATIONS AND DETAILS) AND ANY SUPPLEMENTS TO THE APWA SPECIFICATIONS AND DETAILS BY CACHE COUNTY CITY UNLESS SPECIFICALLY STATED OTHERWISE IN THESE PLANS.

2. THE CONTRACTOR SHALL OBTAIN ALL NECESSARY PERMITS PRIOR TO BEGINNING CONSTRUCTION. THE CONTRACTOR IS RESPONSIBLE FOR VERIFICATION OF EXISTING PERMITS, RENEWAL OF LAPSED PERMITS, AND OBTAINING ANY NEW PERMITS, INCLUDING, BUT NOT LIMITED TO A DUST CONTROL PERMIT, ENCROACHMENT PERMIT, AND TRAFFIC CONTROL PERMITS AS REQUIRED BY CACHE COUNTY CITY.

3. THE CONTRACTOR IS RESPONSIBLE FOR MAKING ARRANGEMENTS FOR INSPECTION AND TESTING.

4. THE CONTRACTOR SHALL NOTIFY CACHE COUNTY CITY'S INSPECTION DEPARTMENT 24 HOURS PRIOR TO CONSTRUCTION. CONSTRUCTION CONCEALED WITHOUT THE REQUIRED INSPECTION SHALL BE SUBJECT TO EXPOSURE AT THE CONTRACTOR'S EXPENSE.

5. THE CONTRACTOR IS RESPONSIBLE FOR LOCATING EXISTING UNDERGROUND UTILITIES PRIOR TO CONSTRUCTION. CALL BLUE STAKE AT (800) 662-4111 AT LEAST 2 BUSINESS DAYS BEFORE ANY CONSTRUCTION BEGINS.

6. THE CONTRACTOR SHALL FOLLOW GUIDELINES AND REGULATIONS SET FORTH BY O.S.H.A. SUNRISE ENGINEERING, INC. WILL NOT BE RESPONSIBLE FOR JOB-SITE SAFETY PROCEDURES OR CONDITIONS.

7. THE CONTRACTOR IS RESPONSIBLE FOR HIS OWN TAKEOFF QUANTITIES. QUANTITIES IF SHOWN HEREON ARE ESTIMATES ONLY AND AS SUCH ARE NOT TO BE USED FOR BID PURPOSES.

8. THE CONTRACTOR IS RESPONSIBLE FOR THE NOTIFICATION OF THE PROPER AUTHORITY(S) IF THERE ARE OBSTRUCTIONS TO PROPOSED IMPROVEMENTS AS SHOWN ON THE CONSTRUCTION DRAWINGS. ANY EXISTING ITEM REMOVED TO FACILITATE CONSTRUCTION SHALL BE REPLACED IN THE SAME OR BETTER CONDITION AT THE CONTRACTOR'S EXPENSE.

9. THE CONTRACTOR SHALL COORDINATE WITH UTILITY COMPANIES FOR LOCATION OF SERVICE AND/OR RELOCATION OF UTILITIES IN CONFLICT WITH PROPOSED CONSTRUCTION. THE ENGINEER SHALL NOT BE RESPONSIBLE FOR COORDINATING THE RELOCATION OF UTILITIES, POWER POLES, ETC.

10. THE CONTRACTOR IS RESPONSIBLE FOR TRAFFIC CONTROL ON AND AROUND THE CONSTRUCTION SITE IN ACCORDANCE WITH THE MANUAL ON UNIFORM TRAFFIC CONTROL DEVICES FOR STREETS AND HIGHWAYS.

11. THE CONTRACTOR SHALL PROVIDE ADEQUATE MEANS FOR CLEANING TRUCKS AND/OR OTHER EQUIPMENT OF MUD PRIOR TO ENTERING PUBLIC STREETS, AND IT IS THE CONTRACTOR'S RESPONSIBILITY TO CLEAN STREETS, AND TAKE WHATEVER MEASURES ARE NECESSARY TO INSURE THAT ALL ROADS ARE MAINTAINED IN A CLEAN, MUD AND DUST FREE CONDITION AT ALL TIMES. NO WORK WILL BE CONSIDERED COMPLETE UNTIL ALL PAVEMENTS HAVE BEEN SWEPT CLEAN OF DIRT AND DEBRIS.

12. PRIOR TO MOVING OR DESTROYING PROTECTED NATIVE PLANT SPECIES, THE CONTRACTOR SHALL FILE A FORMAL NOTICE OF INTENT WITH THE UTAH DEPARTMENT OF AGRICULTURE NATIVE PLANTS.

13. A THOROUGH ATTEMPT HAS BEEN MADE TO SHOW THE LOCATIONS OF ALL UNDERGROUND OBSTRUCTIONS AND UTILITY LINES IN THE WORK AREA. HOWEVER, THE CONTRACTOR SHALL BE RESPONSIBLE FOR ANY DAMAGE TO OBSTRUCTIONS AND UTILITY LINES ENCOUNTERED DURING CONSTRUCTION AND SHALL DETERMINE THE EXACT LOCATION OF UTILITIES IN ADVANCE OF TRENCHING. THE ENGINEER WILL NOT GUARANTEE ANY ELEVATIONS AT LOCATIONS OF THE EXISTING UNDERGROUND UTILITIES SHOWN ON THESE PLANS.

14. THE CONTRACTOR SHALL PROVIDE A LICENSED SURVEYOR FOR THE SURVEYING/CONSTRUCTION STAKING OF ALIGNMENT AND GRADE FOR EACH MAIN AND/OR FACILITY AS SHOWN ON THE PLANS.

15. EXACT POINT OF MATCHING, TERMINATION AND OVERLAY, IF NECESSARY, MAY BE DETERMINED IN THE FIELD BY THE ENGINEER OF RECORD OVERSEEING THE PROJECT CONSTRUCTION.

16. ANY AMBIGUITIES OR DEFICIENCIES DISCOVERED ON THESE PLANS ARE TO BE RESOLVED BY SUNRISE ENGINEERING OR ITS APPOINTED REPRESENTATIVE. ANY MODIFICATIONS TO THESE PLANS MADE BY ANYONE OTHER THAN SUNRISE ENGINEERING OR ITS APPOINTED REPRESENTATIVE IS SOLELY RESPONSIBLE FOR THOSE MODIFICATIONS..

17. CONTRACTOR SHALL PROTECT ANY SURVEY MONUMENTS FOUND DURING CONSTRUCTION.

ABBREVIATIONS

ABC	AGGREGATE BASE COURSE
AC	ASPHALT CONCRETE
BC	BACK OF CURB
BCF	BRASS CAP FLUSH
BCHH	BRASS CAP IN HAND HOLE
BCR	BEGIN CURB RETURN
BM	BENCHMARK
BSW	BACK OF SIDEWALK
BTM	BOTTOM
CB	CATCH BASIN
C/L	CENTERLINE
CMP	CORRUGATED METAL PIPE
CO	CLEAN OUT
CONC	CONCRETE
CONST	CONSTRUCTION
CY	CUBIC YARD
D/W	DRIVEWAY
DWG	DRAWING
DTL	DETAIL
E	EAST
ECR	END CURB RETURN
ELEV	ELEVATION
EP	EDGE OF PAVEMENT
ESMT	EASEMENT
EX, EXIST	EXISTING
FC	FACE OF CURB
FES	FLARED END SECTION
FF	FINISHED FLOOR
FG	FINISHED GRADE
FH	FIRE HYDRANT
FL	FLANGE
FND	FOUND
FO	FIBER OPTIC
FPS	FEET PER SECOND
FSW	FRONT OF SIDEWALK
FT	FOOT, FEET
G	GAS, GUTTER, GRADE
GB	GRADE BREAK
GPM	GALLONS PER MINUTE
HDPE	HIGH DENSITY POLYETHYLENE PIPE
HP	HIGH POINT
HW	HIGHWATER
IN.	INCH, INCHES
INV	INVERT
IRR, IRRIG	IRRIGATION
L	LENGTH
LF	LINEAR FEET
LT	LEFT
MH	MANHOLE
MJ	MECHANICAL JOINT
N	NORTH
NA	NOT APPLICABLE
NIC	NOT IN CONTRACT
NO.	NUMBER
OHE	OVERHEAD ELECTRIC
OPNG	OPENING
P/L	PROPERTY LINE
PC	POINT OF CURVATURE
PCC	POINT OF COMPOUND CURVE
PCC	PORTLAND CEMENT CONCRETE
PRC	POINT OF REVERSE CURVE
PT	POINT OF TANGENCY
PUE	PUBLIC UTILITY EASEMENT
PVC	POLYVINYL CHLORIDE
PVI	POINT OF VERTICAL INTERSECTION
R	RADIUS
R/W	RIGHT-OF-WAY
RGRCP	RUBBER GASKETED REINFORCED CONCRETE PIPE
RJ	RESTRAINED JOINT
RT	RIGHT
S	SEWER, SLOPE, SOUTH
SDMH	STORM DRAIN MANHOLE
SF	SQUARE FEET
SSMH	SANITARY SEWER MANHOLE
STA	STATION
STD	STANDARD
SWK	SIDEWALK
SY	SQUARE YARD
TAN	TANGENT
TBC	TOP BACK OF CURB
T, TEL	TELEPHONE
TL	TRUE LENGTH
TYP	TYPICAL
UGE	UNDERGROUND ELECTRIC
UPRR	UNION PACIFIC RAILROAD
VNAE	VEHICLE NON-ACCESS EASEMENT
Vr	VOLUME REQUIRED
Vp	VOLUME PROVIDED
W	WATER, WEST, WITH
WYDOT	WYOMING DEPARTMENT OF TRANSPORTATION
XFMR	TRANSFORMER

LEGEND

EXISTING

	EXISTING CONCRETE
	EXISTING PAVEMENT TO BE REMOVED
	EXISTING PAVEMENT TO REMAIN
irr	EXISTING IRRIGATION LINE
x"s	EXISTING SEWER LINE
x"sd	EXISTING STORM DRAIN
x"w	EXISTING WATER LINE
ohe	EXISTING OVERHEAD ELECTRIC
uge	EXISTING UNDERGROUND ELECTRIC
c	EXISTING CABLE (TV) LINE
fo	EXISTING FIBER OPTIC LINE
t	EXISTING UNDERGROUND TELEPHONE
g	EXISTING GAS LINE
x x	EXISTING BARBED WIRE FENCE
	EXISTING EASEMENT
	EXISTING FLOWLINE
	EXISTING PROPERTY LINE
X 1443.08	EXISTING SPOT ELEVATION
1440	EXISTING CONTOUR
	EXISTING BRASS CAP MONUMENT
	EXISTING SIGN
IR	EXISTING IRRIGATION MANHOLE
	EXISTING IRRIGATION VALVE
	EXISTING DRYWELL
	EXISTING SEWER CLEANOUT
S	EXISTING SEWER MANHOLE
	EXISTING CATCH BASIN
SD	EXISTING STORM DRAIN MANHOLE
	EXISTING STORM DRAIN W/ STRUCTURE
W	EXISTING AIR VAC
	EXISTING FIRE HYDRANT
U	EXISTING UNKNOWN MANHOLE
	EXISTING GATE VALVE
	EXISTING REDUCER
W	EXISTING WATER MANHOLE (OR WELL)
WM	EXISTING WATER METER
C	EXISTING CABLE MANHOLE
E	EXISTING ELECTRIC MANHOLE
	EXISTING GUY WIRE
	EXISTING LIGHT POLE
	EXISTING POWER POLE
T	EXISTING TELEPHONE MANHOLE
G	EXISTING GAS MANHOLE
GM	EXISTING GAS METER
	EXISTING GAS RISER
	EXISTING GAS VALVE
	EXISTING VEGETATION

PROPOSED

	PROPOSED CONCRETE
	PROPOSED PAVEMENT
X"IRR	EXISTING IRRIGATION LINE
X"S	PROPOSED SEWER LINE
X"SD	PROPOSED STORM DRAIN
X"W	PROPOSED WATER LINE
OHE	PROPOSED OVERHEAD ELECTRIC
UGE	PROPOSED UNDERGROUND ELECTRIC
C	PROPOSED CABLE (TV) LINE
FO	PROPOSED FIBER OPTIC LINE
T	PROPOSED UNDERGROUND TELEPHONE
X"G	PROPOSED GAS LINE
X X	PROPOSED BARBED WIRE FENCE
	PROPOSED EASEMENT
	PROPOSED FLOWLINE
	PROPOSED PROPERTY LINE
X 1443.08	PROPOSED SPOT ELEVATION
1440	PROPOSED CONTOUR
	PROPOSED (PLACED) BRASS CAP MONUMENT
	PROPOSED SIGN
IR	PROPOSED IRRIGATION MANHOLE
	PROPOSED IRRIGATION VALVE
	PROPOSED DRYWELL
	PROPOSED SEWER CLEANOUT
S	PROPOSED SEWER MANHOLE
	PROPOSED CATCH BASIN
SD	PROPOSED STORM DRAIN MANHOLE
	PROPOSED STORM DRAIN W/ STRUCTURE
W	PROPOSED AIR VAC
	PROPOSED FIRE HYDRANT
	PROPOSED FITTINGS
	PROPOSED GATE VALVE
	PROPOSED REDUCER
W	PROPOSED WATER MANHOLE (OR WELL)
WM	PROPOSED WATER METER
C	PROPOSED CABLE MANHOLE
E	PROPOSED ELECTRIC MANHOLE
	PROPOSED GUY WIRE
	PROPOSED LIGHT POLE
	PROPOSED POWER POLE
T	PROPOSED TELEPHONE MANHOLE
G	PROPOSED GAS MANHOLE
GM	PROPOSED GAS METER
	PROPOSED GAS RISER
	PROPOSED GAS VALVE
	PROPOSED VEGETATION

OTHER

GB	GRADE BREAK
	HIGH WATERLINE
	LOT LINE
	RIGHT-OF-WAY
	ROADWAY CENTERLINE
	SECTION LINE
	SETBACK LINE
	POINT OF VERTICAL INTERSECTION
B	PLAN, SECTION, OR DETAIL LABEL
DT2	DRAWING TITLE/SHEET NUMBER
6.56	TBC ELEVATION (x1000')
6.3	LOT ELEVATION (x1000')
	BASIN ULTIMATE OUTFALL LOCATION AND DIRECTION
	GRADE BREAK (PROFILE SYMBOL)

811 Know what's below. Call before you dig. 1-800-662-4111

REV NO.	COMMENT	DATE

LICENSED PROFESSIONAL ENGINEER No. 12401899 Steven David Wood 06/03/2024 STATE OF UTAH

SUNRISE ENGINEERING
2100 NORTH MAIN STREET
NORTH LOGAN, UTAH 84341
TEL 435.563.3734
www.sunrise-eng.com

BEN KUETHE

HOBBLED DOG CIDERY
625 WEST 8300 SOUTH, PARADISE, UT 84328
GENERAL NOTES, LEGEND AND ABBREVIATIONS

SEI NO.	DESIGNED	DRAWN	CHECKED	SHEET NO.	
09637	SDW	HP	SDW	2 of 8	GN2

GENERAL NOTES

1. ELEVATION DATA WAS ACQUIRED USING 0.5M LIDAR DATA THROUGH UTAH AGRC

SCALE
0 40' 80'
HORIZ: 1" = 40' : 22 x 34
HORIZ: 1" = 80' : 11 x 17

811 Know what's **below.** **Call** before you dig. 1-800-662-4111

REV NO.	COMMENT	DATE

LICENSED PROFESSIONAL ENGINEER No. 12401899 Steven David Wood 06/03/2024 STATE OF UTAH

SUNRISE ENGINEERING
2100 NORTH MAIN STREET
NORTH LOGAN, UTAH 84341
TEL 435.563.3734
www.sunrise-eng.com

BEN KUETHE

HOBBLED DOG CIDERY
625 WEST 8300 SOUTH, PARADISE, UT 84328
SITE PLAN

SEI NO.	DESIGNED	DRAWN	CHECKED	SHEET NO.	
09637	SDW	HP	SDW	3 of 8	SP1

P:\Hobbled Dog - Ben Kuethe\09637 - Hobbled Dog Cidery Project\DWG\Sheets\HDC-SP.dwg Jun 03, 2024 3:11pm jjolley

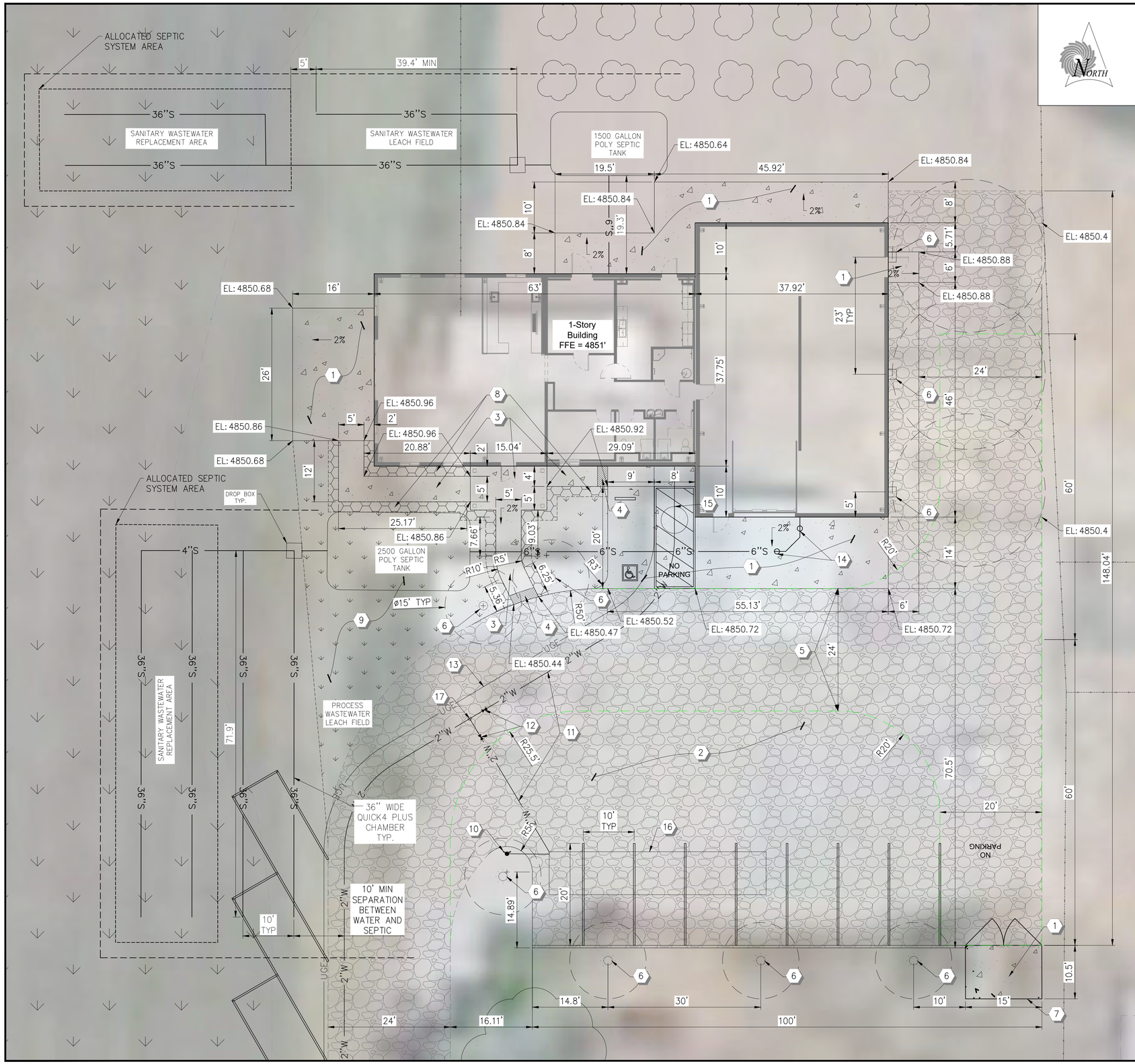

GENERAL NOTES

1. ALL SEWER PIPE AND DRAIN PIPE IS TO BE INSTALLED WITH A MIN SLOPE OF 2% TOWARDS SEPTIC FIELDS, TANKS, AND DRAINS
2. THE FIRE SUPPRESSION STORAGE TANK CAN BE A SINGLE TANK OR MULTIPLE TANKS AS LONG AS THE TOTAL VOLUME IS 17,000 GALLONS – IF MULTIPLE TANKS ARE USED, PIPING BETWEEN TANKS IS TO BE LOCATED 1' FROM THE TOP AND 1' FROM BOTTOM OF THE TANKS (TWO PIPES)

LIGHTING SCHEDULE

LEGEND	QTY	LIGHTING MODEL
	2	THEMIS SOLAR POST TOP LIGHT
	4	MUSE SOLAR BOLLARD LIGHT
	3	BUILDING (WALL MOUNT) LIGHT
	N/A	LUMINOUS RANGE

SEPTIC SYSTEMS

CALCULATION

TRENCH LENGTH
*= DESIGN FLOW / (APPLICATION RATE * SIDEWALL AREA/LF) * 30% CHAMBER REDUCTION*

SANITARY WASTEWATER (SW)

REQUIRED TOTAL TRENCH LENGTH:
*= (270 GPD) / (0.8 GAL/SF/DAY * 3 SF/LF) * 0.7*
= 78.75 LF
PROVIDED TRENCH NUMBER: 2
EACH TRENCH LENGTH: 39.38 LF

PROCESS WASTEWATER (PW)

PROCESS WATER WILL BE FREE OF IN-ORGANICS AND DOMESTIC WASTE FLOWS - PROCESS WATER IS TO BE SETTLED / SKIMMED IN 2500 GALLON SEPTIC TANK PRIOR TO LAND APPLICATION ON AGRICULTURE FIELD TO THE WEST OR DRAINING OUT THROUGH DRAIN FIELD

REQUIRED TOTAL TRENCH LENGTH:
*= (493 GPD) / (0.8 GAL/SF/DAY * 3 SF/LF) * 0.7*
= 143.79 LF
PROVIDED TRENCH NUMBER: 2
EACH TRENCH LENGTH: 71.90 LF

NOTES

1. *A REPLACEMENT AREA IS ALLOCATED FOR BOTH SW AND PW LEACH FIELD.*
2. *THE QUICK4 PLUS STANDARD CHAMBER CAN REDUCE 30% REQUIRED TRENCH LENGTH FOR LEACH FIELD.*
3. *PLEASE FIND THE ENCLOSED WASTEWATER FEASIBILITY STUDY FOR MORE DETAILS.*

CONSTRUCTION NOTES

1. INSTALL CONCRETE PAVEMENT (D/D1)
2. INSTALL GRAVEL DRIVEWAY / PARKING (F/D1)
3. INSTALL CONCRETE SIDEWALK (C/D1)
4. INSTALL ADA RAMP
5. FIRE LANE TURN-AROUND
6. EXTERIOR LIGHTING – SEE LIGHTING SCHEDULE BELOW
7. GARBAGE COLLECTION AREA TO BE WALLED / FENCED ON SOUTH, EAST AND WEST EDGES WITH A DOUBLE SWING GATE ON THE NORTH FACE – WALLS / FENCE TO BE SOLID PANELS AND 6' TALL MIN
8. PLANTER
9. LANDSCAPING
10. 4" FDC CONNECTION (A/D1)
11. 2" ROLLED POLY PIPE WATER LINE (B/D1)
12. GATE VALVE (G/D1)
13. UNDERGROUND ELECTRICAL – MAINTAIN 4' SEPARATION – FOLLOWS WATER LINE TO WELL
14. (2) 45° W/ (2) CLEANOUTS
15. 500 GALLON TRAFFIC RATED POTABLE WATER TANK EQUIPPED W/ AIR VENT TO BE LOCATED IN A BELOW GRADE VALVE BOX RATED FOR TRAFFIC
16. 17,000 GALLON TRAFFIC RATED FIRE TANK EQUIPPED W/ AIR VENT TO BE LOCATED IN A BELOW GRADE VALVE BOX RATED FOR TRAFFIC – TANK ALSO EQUIPPED W/ FLOAT VALVE W/ BACK FLOW PREVENTER FOR FIRE TANK FILLING
17. 2"x2" POLY TEE

SCALE
0 10' 20'
HORIZ: 1" = 10' : 22 x 34
HORIZ: 1" = 20' : 11 x 17

811 Know what's below. Call before you dig. 1-800-662-4111

REV NO.	COMMENT	DATE

LICENSED PROFESSIONAL ENGINEER No. 12401899 Steven David Wood 06/03/2024 STATE OF UTAH

SUNRISE ENGINEERING
2100 NORTH MAIN STREET
NORTH LOGAN, UTAH 84341
TEL 435.563.3734
www.sunrise-eng.com

BEN KUETHE
HOBBLED DOG CIDERY
625 WEST 8300 SOUTH, PARADISE, UT 84328
ENLARGED SITE PLAN

SEI NO.	DESIGNED	DRAWN	CHECKED	SHEET NO.
09637	SDW	JJ	SDW	4 of 8

SP2

P:\Hobbled Dog – Ben Kuethe\09637 – Hobbled Dog Cidery Project\DWG\Sheets\HDC-SP.dwg Jun 03, 2024 3:11pm jjolley

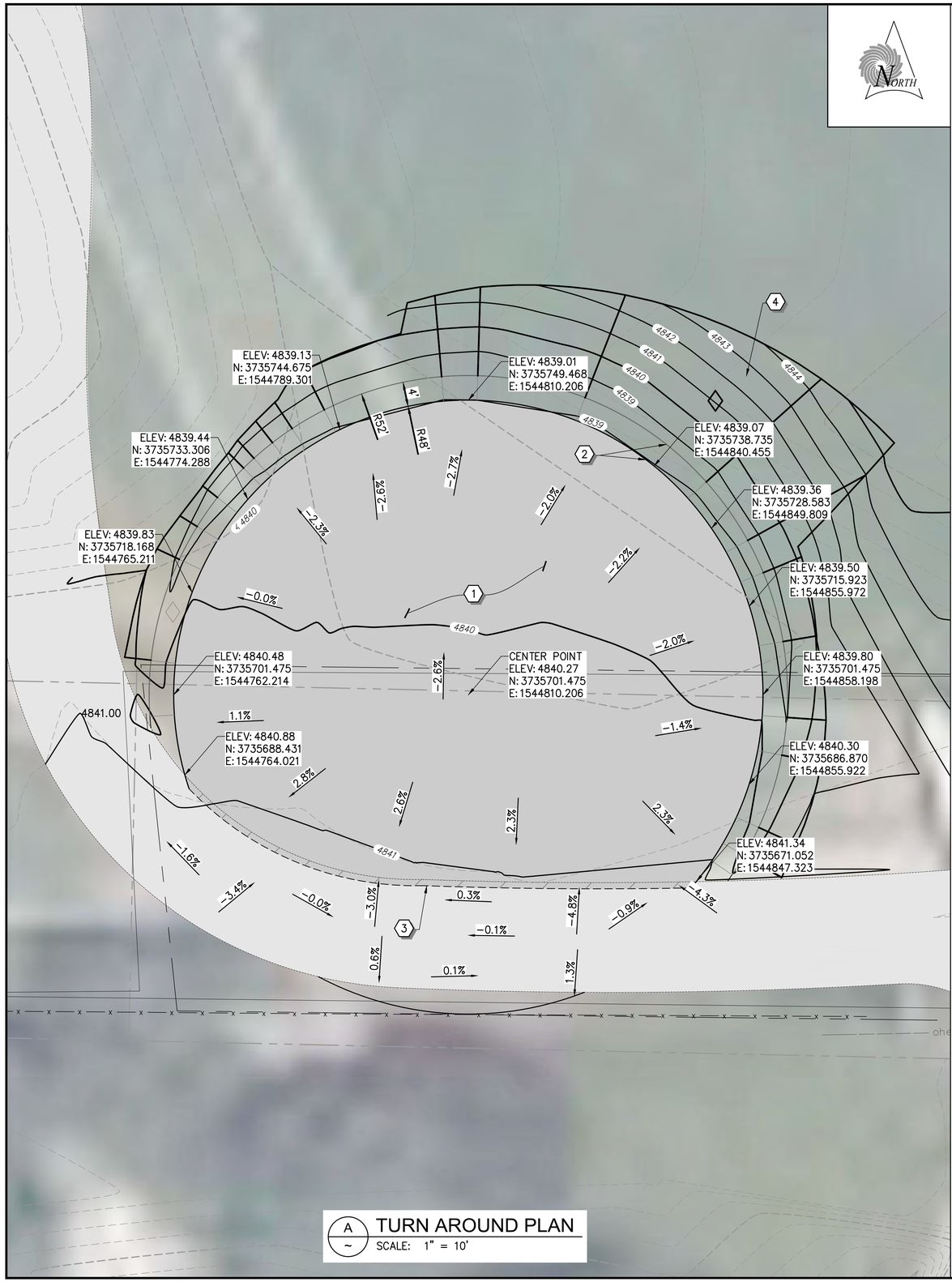

A ~ TURN AROUND PLAN
SCALE: 1" = 10'

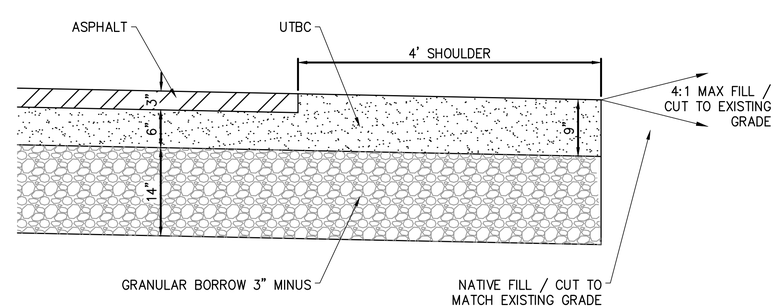

B ~ TURN AROUND CROSS SECTION
NOT TO SCALE

CONSTRUCTION NOTES

1. INSTALL NEW 96'ø ASPHALT TURN AROUND (B ~)
2. INSTALL NEW 4' WIDE SHOULDER (B ~)
3. SAWCUT EXISTING ASPHALT 1' TO PROVIDE CLEAN EDGE
4. 4:1 CUT
5. 4:1 FILL

ESTIMATED QUANTITIES:

ASPHALT	54 CU YDS
UTBC	138 CU YDS
GRANULAR BORROW	297 CU YDS

SPOILS FROM EXCAVATION TO BE USED IN SLOPE BACKFILL

GENERAL NOTES

1. ALL SLOPES ARE TO BE 4 TO 1 UNLESS OTHERWISE SPECIFIED

SCALE
0 10' 20'
HORIZ: 1" = 10' : 22 x 34
HORIZ: 1" = 20' : 11 x 17

811 Know what's below. Call before you dig. 1-800-662-4111

REV NO.	COMMENT	DATE

LICENSED PROFESSIONAL ENGINEER No. 12401899 Steven David Wood 06/03/2024 STATE OF UTAH

SUNRISE ENGINEERING
2100 NORTH MAIN STREET
NORTH LOGAN, UTAH 84341
TEL 435.563.3734
www.sunrise-eng.com

BEN KUETHE

HOBBLED DOG CIDERY
625 WEST 8300 SOUTH, PARADISE, UT 84328
TURN AROUND PLAN

SEI NO.	DESIGNED	DRAWN	CHECKED	SHEET NO.	
09637	SDW	HP	SDW	5 of 8	SP3

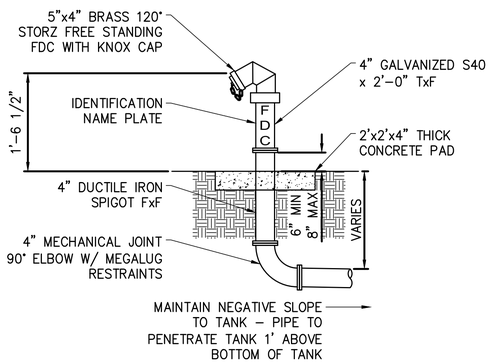

A ~ DETAIL - FDC CONNECTION
NOT TO SCALE FIRE DEPARTMENT CONNECTION

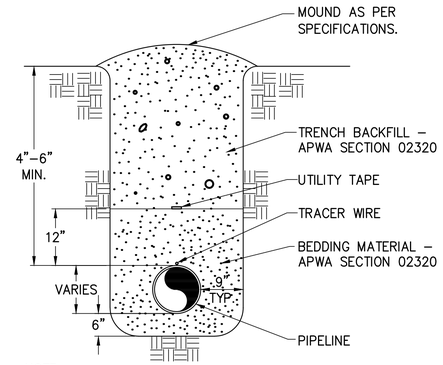

NOTE:
1. TRENCH DETAIL OUTSIDE OF TRAVELED ROADWAY AREA.
2. BEDDING MATERIAL SURROUNDING PIPE SHALL BE LESS THAN 3/4" FOR PVC PIPE
3. NATIVE BACKFILL MATERIAL SHALL INCLUDE NO ROCKS LARGER THAN 6" DIAMETER.

B ~ DETAIL - TYPICAL PIPELINE TRENCH
NOT TO SCALE

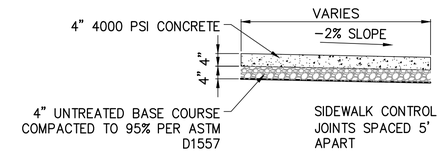

C ~ DETAIL - SIDEWALK SECTION
NOT TO SCALE

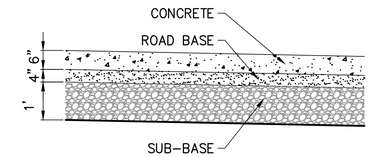

COMPACT ROAD–BASE AND SUB BASE TO 95% COMPACTION

D ~ DETAIL - CONCRETE PAVEMENT
NOT TO SCALE

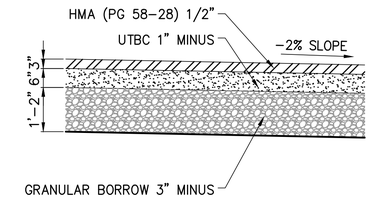

E ~ DETAIL - ASPHALT PAVEMENT SECTION
NOT TO SCALE

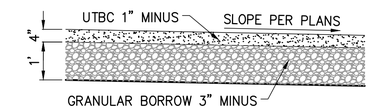

F ~ DETAIL - GRAVEL DRIVEWAY SECTION
NOT TO SCALE

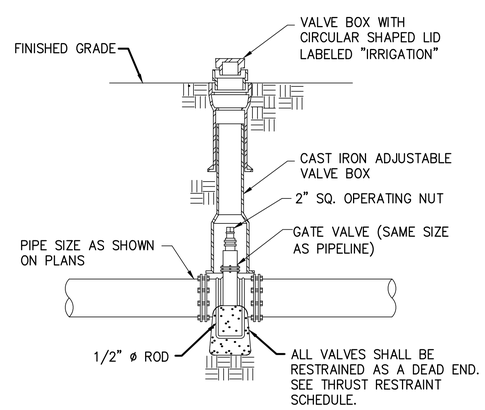

G ~ DETAIL - GATE VALVE
NOT TO SCALE

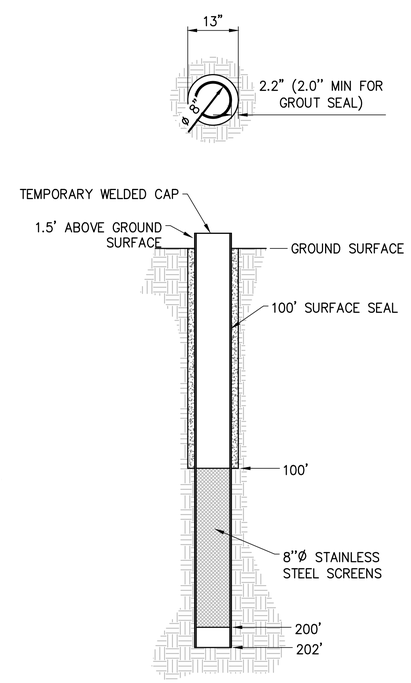

H ~ DETAIL - PRODUCTION WELL PLAN
NOT TO SCALE

CONSTRUCTION NOTES:

DRILLING METHODS:
- REVERSE CIRCULATION MUD ROTARY, OR
- AIR ROTARY WITH CASING ADVANCE.

CONSTRUCTION PHASES:
- MOBILIZE EQUIPMENT TO THE SITE;
- GROUT ANNULUS BETWEEN BOREHOLE AND CONDUCTOR CASING;
- COLLECT CUTTING AND FORMATION SAMPLES THROUGH THE PRODUCTION ZONE(S);
- DRILL AND LOG A BOREHOLE SIZED TO ACCOMMODATE A 8–INCH DIAMETER WELL PRODUCTION CASING WITH STAINLESS STEEL SCREENS ALONG 80–90% THE THICKNESS OF THE WATER BEARING FORMATIONS TO A TOTAL BOREHOLE DEPTH BETWEEN 100–200 FEET; MILLS KNIFE PERFORATOR MAY BE USED INSTEAD OF STAINLESS STEEL SCREEN WITH OWNER PERMISSION.
- PLACE STAINLESS STEEL SCREENS
- COMPLETE GEOPHYSICAL TESTING AND LOGGING;
- GROUT ANNULAR SPACES TO A MINIMUM DEPTH OF 100 FEET PER DIVISION OF WATER RIGHTS STANDARDS;
- CONDUCT PRELIMINARY WELL DEVELOPMENT;
- INSTALL TEST PUMPING EQUIPMENT NEAR THE BOTTOM OF THE BOREHOLE;
- DEVELOP THE WELL TO PROVIDE A SUPPLY OF CULINARY WATER WHICH MEETS OR EXCEEDS THE UTAH DEPARTMENT OF ENVIRONMENTAL QUALITY, DRINKING WATER STANDARDS;
- CONDUCT STEP–DRAWDOWN AND CONSTANT RATE PUMPING TESTS FOR A TARGET FLOW RATE OF 100 GALLONS PER MINUTE;
- COLLECT WATER SAMPLES FROM SPECIFIC ZONES IN THE TEST BOREHOLE (COMPLETED BY CLIENT);
- SUBMIT TWO WATER SAMPLES TO LABORATORY TESTING COMPANY (COMPLETED BY CLIENT);
- DISINFECT AND SEAL THE WELL;
- DEMOBILIZE AND RESTORE THE SITE.

811 Know what's below. Call before you dig. 1-800-662-4111

REV NO.	COMMENT	DATE

LICENSED PROFESSIONAL ENGINEER No. 12401899 Steven David Wood 06/03/2024 STATE OF UTAH

SUNRISE ENGINEERING
2100 NORTH MAIN STREET
NORTH LOGAN, UTAH 84341
TEL 435.563.3734
www.sunrise-eng.com

BEN KUETHE

HOBBLED DOG CIDERY
625 WEST 8300 SOUTH, PARADISE, UT 84328
DETAILS

SEI NO.	DESIGNED	DRAWN	CHECKED	SHEET NO.	
09637	SDW	JJ	SDW	6 of 8	D1

LEGEND

- LIMITS OF DISTURBANCE
- SILT FENCE
- STORM WATER FLOW
- TRACK OUT / WASH DOWN AREA
- STORAGE/ WASHOUT AREA
- SWPPP SIGN

CONSTRUCTION NOTES

- (A) CONSTRUCT SILT FENCE PER DETAIL A
- (B) SWPPP SIGN PER DETAIL B
- (C) CONSTRUCT STORAGE / WASHOUT AREA PER DETAIL C
- (D) CONSTRUCT TRACK OUT / WASH DOWN AREA PER DETAIL D

NOTES

1. THIS MAP & ASSOCIATED DETAILS ARE TO BE USED IN CONJUNCTION WITH THE STORM WATER POLLUTION PREVENTION PLAN THAT HAS BEEN PREPARED FOR THIS SPECIFIC PROJECT.
2. CONSTRUCTION WASTE WILL BE HAULED OFF–SITE AND DISPOSED OF PER STATE REGULATIONS.
3. DUST CONTROL– CONTRACTOR SHALL USE WATER AS NEEDED FOR DUST SUPPRESSION. DUST CONTROL SHALL BE IN ACCORDANCE WITH STATE AIR QUALITY REGULATIONS.
4. ALL CONSTRUCTION BMP'S ARE TO BE INSPECTED AND MAINTAINED AS OUTLINED IN THE SWPPP DOCUMENT.
5. CONTRACTOR SHALL BE REQUIRED TO KEEP A RECORD OF ALL INSPECTIONS AND MAINTENANCE ON SITE WITH THE STORM WATER POLLUTION PREVENTION PLAN.
6. TEMPORARY EROSION PROTECTION– ANY EXPOSED SLOPES WHERE FURTHER WORK IS NOT EXPECTED FOR 28 DAYS SHALL BE MULCHED OR TEMPORARY SEEDED.

SCALE
0 40' 80'
HORIZ: 1" = 40' : 22 x 34
HORIZ: 1" = 80' : 11 x 17

811 Know what's **below.** **Call** before you dig. 1-800-662-4111

REV NO.	COMMENT	DATE

LICENSED PROFESSIONAL ENGINEER No. 12401899 Steven David Wood 06/03/2024 STATE OF UTAH

SUNRISE ENGINEERING
2100 NORTH MAIN STREET
NORTH LOGAN, UTAH 84341
TEL 435.563.3734
www.sunrise-eng.com

BEN KUETHE

HOBBLED DOG CIDERY
625 WEST 8300 SOUTH, PARADISE, UT 84328
SWPPP SITE PLAN

SEI NO.	DESIGNED	DRAWN	CHECKED	SHEET NO.	
09637	SDW	JJ	SDW	7 of 8	SW1

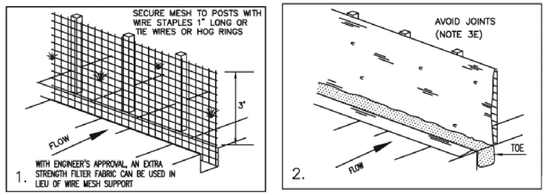

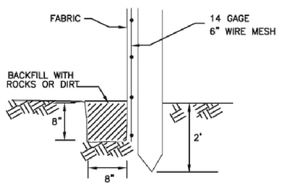

TOE DETAIL

SILT FENCE

1. DESCRIPTION: A temporary sediment barrier consisting of a filter fabric stretched across and attached to supporting posts and entrenched.

2. APPLICATION: To intercept sediment from disturbed areas of limited extent.
A. Perimeter Control: Place barrier at down gradient limits of disturbance.
B. Sediment Barrier: Place barrier at toe of slope or soil stockpile.
C. Protection of Existing Waterways: Place barrier at top of stream bank.
D. Inlet Protection.

3. INSTALLATION/APPLICATION CRITERIA: Refer to APWA Section 01 57 00.
A. Synthetic filter fabric shall be a pervious sheet of propylene, nylon, polyester, or polyethylene yarn. Synthetic filter fabric shall contain ultraviolet ray inhibitors and stabilizers to provide a minimum of 6 months of expected usable construction life at a temperature range of 0 deg.F. to 120 deg.F.
B. Burlap shall be 10 ounces per square yard of fabric.
C. Posts for silt fences shall be either 2" x 4" diameter wood, or 1.33 pounds per linear foot steel with a minimum length of 5 feet. Steel posts shall have projections for fastening wire to them.
D. The fabric is cut on site to desired width, unrolled, and draped over the barrier. The fabric toe is secured with rocks or dirt. The fabric is secured to the mesh with twin, staples or similar devices.
E. When attaching two silt fences together, place the end post of the second fence inside the end post of the first fence. Rotate both posts at least 180 degrees on a clockwise direction to create a tight seal with the filter fabric. Drive both posts into the ground and bury the flap.
F. When used to control sediments from a steep slope, silt fences should be placed away from the toe of the slope for increased holding capacity.

4. MAINTENANCE:
A. Inspected immediately after each rainfall and at least daily during prolonged rainfall.
B. Should the fabric on a silt fence or filter barrier decompose or become ineffective before the end of the expected usable life and the barrier still be necessary, the fabric shall be replaced promptly.
C. Sediment deposits should be removed after each storm event. They must be removed when deposits reach approximately one-half the height of the barrier.
D. Re-anchor fence as necessary to prevent shortcutting.
E. Inspect for runoff bypassing ends of barriers or undercutting barriers.

A ~ DETAIL- SILT FENCE
NOT TO SCALE

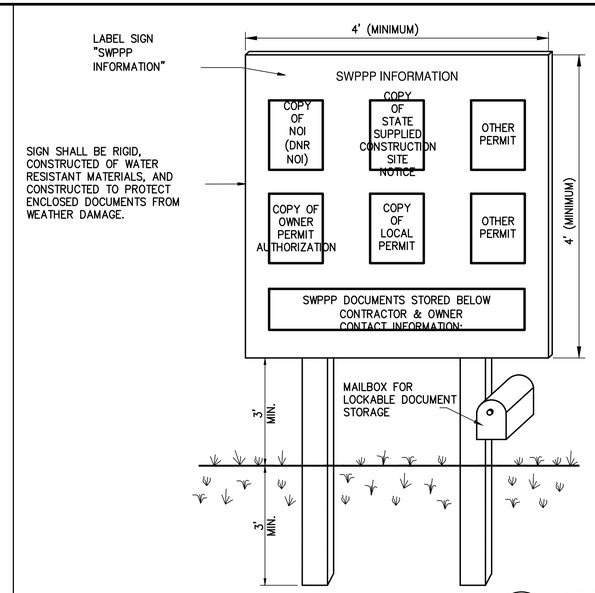

NOTES:
1) THE SWPPP INFORMATION SIGN MUST BE LOCATED NEAR THE CONSTRUCTION ENTRANCE OF THE SITE, ACCESSIBLE AND VIEWABLE BY THE GENERAL PUBLIC.
2) CONTRACTOR SHALL ENSURE THAT ALL DOCUMENTS ARE MAINTAINED IN GOOD CONDITION THROUGHOUT CONSTRUCTION.
3) CONTRACTOR SHALL POST OTHER STORM WATER AND/OR EROSION AND SEDIMENT CONTROL PERMITS INCLUDING BUT NOT LIMITED TO:
   A. ARMY CORPS OF ENGINEERS 404 PERMIT.
   B. NOTICE OF INTENT.
   C. LOCAL DISTURBANCE PERMIT.
   D. BURN PERMIT(S).
4) SIGN SHALL BE LOCATED OUTSIDE OF PUBLIC RIGHT-OF-WAY.
5) CONTRACTOR SHALL BE RESPONSIBLE FOR SIGN STABILITY.

B ~ DETAIL - SWPPP SIGN
NOT TO SCALE

NOTES:

1. DO NOT DISPOSE OF WASH-OUT INTO THE STREET, STORM DRAINS, DRAINAGE DITCHES, OR WATERCOURSES. WASH OUT CONCRETE TRANSIT MIXERS ONLY IN THE DESIGNATED AREA AND AS DIRECTED BY THE PROJECT MANAGER.

2. DIG WASH OUT PIT LARGE ENOUGH TO HOLD WASTE. LET WATER PERCOLATE THROUGH SOIL AND DISPOSE OF SETTLED, HARDENED CONCRETE.

3. JOB SUPERINTENDENT TO MONITOR ON-SITE CONCRETE WASH-OUT, WASTE STORAGE AND DISPOSAL PROCEDURES AT LEAST WEEKLY.

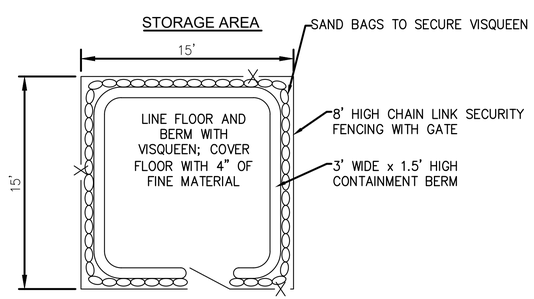

WASHOUT AREA

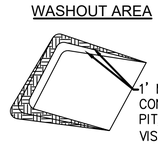

1' MINIMUM EXCAVATED CONCRETE WASH HOLDING PIT, LINE WITH HEAVY MILL VISQUEEN, (POLY LINER), WITH A MINIMUM OF 1' TALL BERMAT PERIMETER DEPTH AND AREA OF PIT TO MATCH NEEDED WASHOUTS.

C ~ DETAIL - STORAGE/WASHOUT AREA
NOT TO SCALE

1. SECURE MESH TO POSTS WITH WIRE STAPLES 1" LONG OR TIE WIRES OR HOG RINGS

2. SECURE FABRIC TO MESH WITH TWINE, STAPLES OR SIMILAR

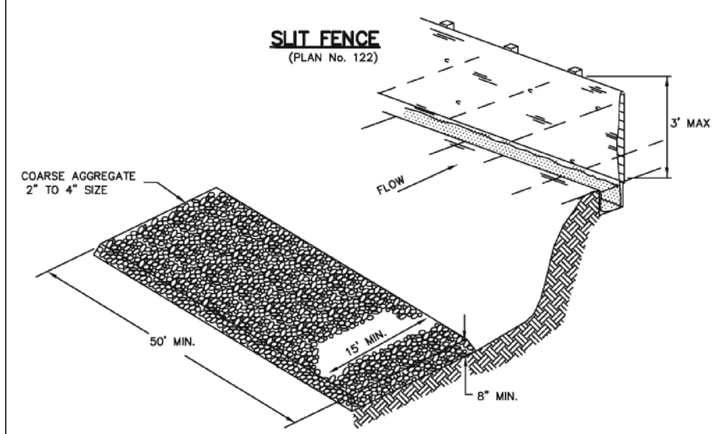

WASH DOWN AREA

D ~ DETAIL - TRACK OUT PAD AREA
NOT TO SCALE

EQUIPMENT AND VEHICLE WASH DOWN AREA

1. DESCRIPTION: A temporary stabilized pad of gravel for general washing of equipment and construction vehicles.

2. APPLICATION: At any site where regular washing of vehicles and equipment will occur. May also be used as a filling point for water trucks limiting erosion caused by overflow or spillage of water.

3. INSTALLATION/APPLICATION CRITERIA: Refer to APWA Section 01 57 00.
A. Clear and grub area and grade to provide maximum slope of 1 percent away from paved roadway.
B. Compact subgrade.
C. Place filter fabric under wash down area if desired (recommended for wash area that remains more than 3 months).
D. Install silt fence down gradient (see Detail A)

4. MAINTENANCE:
A. Requires periodic top dressing with additional stones.
B. Solely used to control sediment in wash water. Cannot be utilized for washing equipment or vehicles that may cause contamination of runoff (such as fertilizer equipment or concrete equipment).
C. The wash area shall be maintained in a condition that will prevent tracking or flow of mud onto public rights-of-way.
D. Periodic top dressing with 2 inch stone may be required, as conditions demand, and repair any structures used to trap sediments.
E. Inspect daily for loss of gravel or sediment buildup.
F. Inspect adjacent area for sediment deposit and install additional controls as necessary.
G. Expand stabilized area as required to accommodate activities.
H. Maintain silt fence as outlined in Detail A.

811 Know what's below. Call before you dig. 1-800-662-4111

REV NO.	COMMENT	DATE

LICENSED PROFESSIONAL ENGINEER No. 12401899 Steven David Wood 06/03/2024 STATE OF UTAH

SUNRISE ENGINEERING
2100 NORTH MAIN STREET
NORTH LOGAN, UTAH 84341
TEL 435.563.3734
www.sunrise-eng.com

BEN KUETHE

HOBBLED DOG CIDERY
625 WEST 8300 SOUTH, PARADISE, UT 84328
SWPPP DETAILS

SEI NO.	DESIGNED	DRAWN	CHECKED	SHEET NO.	
09637	SDW	JJ	SDW	8 of 8	SW2

MECHANICAL SYMBOL LEGEND

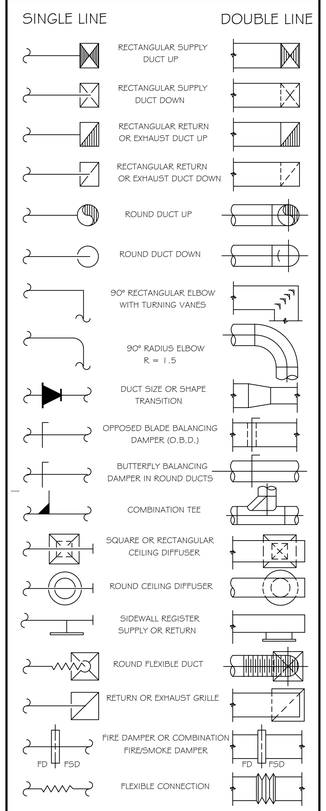

MECHANICAL ABREVIATIONS

AD	ACCESS DOOR	N/A	NOT APPLICABLE
AHU	AIR HANDLING UNIT	NIC	NOT IN CONTRACT
BD	BALANCING DAMPER	NTS	NOT TO SCALE
BHP	BRAKE HORSE POWER	NO	NUMBER
BTU	BRITISH THERMAL UNIT	OZ	OUNCE
CFM	CUBIC FEET PER MINUTE	OA	OUTSIDE AIR
COND	CONDENS(-ER,-ING,-ATION)	PSF	POUNDS PER SQAURE FT.
CLG	COOLING	PSI	POUNDS PER SQUARE IN.
CW	COLD WATER	PSIA	PSI ABSOLUTE
DP	DEPTH OR DEEP	PSIG	PSI GAUGE
ID	INSIDE DIAMTER	PRESS	PRESSURE
OD	OUTSIDE DIAMTER	PD	PRESSURE DIFFERENCE
DB	DRY BULB TEMPERATURE	SP	STATIC PRESSURE
(E)	EXISTING	RA	RETURN AIR
EFF	EFFICIENCY	RPM	REVOLUTIONS PER MIN.
ELEV	ELEVATION	SF	SAFETY FACTOR
EWT	ENTERING WATER TEMP.	SL	SEA LEVEL
EVAP	EVAPORAT(-E,-ING,-ED,-OR)	SH	SENSIBLE HEAT
(F)	FUTURE	SC	SHADING COEFFICIENT
F	FARENHEIT	SPEC	SPECIFICATION
FC	FLEXIBLE CONNECT(-OR,-ION)	SQ	SQUARE
FD	FIRE DAMPER	STD	STANDARD
FPS	FEET PER SECOND	SP	STATIC PRESSURE
FSD	FIRE SMOKE DAMPER	SPLY	SUPPLY
FT	FEET	SA	SUPPLY AIR
GAL	GALLON(S)	TEMP	TEMPERATURE
GPH	GALLONS PER HOUR	TD	TEMP. DROP OR DIFF.
GPM	GALLONS PER MINUTE	R	THERMAL RESITANCE
HD	HEAD	TSTAT	THERMOSTAT
HT	HEIGHT	T	TIME
HTG	HEATING	VAC	VACUUM
HP	HORSE POWER	VAV	VARIBLE AIR VOLUME
HW	HOT WATER	VENT	VENT, VENTILATION
LH	LATENT HEAT	VERT	VERTICAL
LAT	LEAVING AIR TEMPERATURE	VOL	VOLUME
LWT	LEAVING WATER TEMP.	WTR	WATER
LG	LENGTH	WT	WEIGHT
MAX	MAXIMUM	WB	WET BULB TEMP.
MIN	MINIMUM	YR	YEAR
NO	NORMALLY OPEN		
NC	NORMALLY CLOSED		

MECHANICAL SPECIFICATIONS ③

FURNACES

A. PROVIDE AND INSTALL FURNACES WITH CAPACITIES, FEATURES, AND ACCESSORIES AS SHOWN ON THE EQUIPMENT SCHEDULE. PROVIDE EQUIPMENT FROM THE FOLLOWING APPROVED MANUFACTURERS: BRYANT, CARRIER, LENNOX, TRANE, YORK.

B. PROVIDE 10 YEAR MINIMUM WARRANTY FOR THE HEAT EXCHANGER.

C. PROVIDE AN EXTRA SET OF FAN BELTS FOR EACH FAN AND AN EXTRA SET OF FILTERS FOR EACH UNIT.

D. FURNACE SHALL BE FACTORY ASSEMBLED AND TESTED. UNIT SHALL BE CONSTRUCTED WITH MANUFACTURER'S STANDARD CONSTRUCTION WITH ALL COMPONENTS, EQUIPMENT, AND ACCESSORIES. THE ENCLOSURE SHALL HAVE A CORROSION-PROTECTION COATING AND EXTERIOR FINISH.

E. PROVIDE THE FOLLOWING FEATURES WITH THE FURNACE UNLESS NOTED OHERWISE ON THE EQUIPMENT SCHEDULE: 7-DAY PROGRAMMABLE THERMOSTAT WITH AUTOMATIC HEATING AND COOLING CHANGEOVER, AND SERVICE DISCONNECT.

F. PROVIDE COMPLETE FURNACE STARTUP AND COMMISSIONING INCLUDING CONTROLS CHECKOUT, LUBRICATION, FAN ROTATION, VIBRATION, REFRIGERATION SYSTEM, CLEANING, TESTING, AND BALANCING.

G. PROVIDE A FACTORY AUTHORIZED SERVICE REPRESENTATIVE TO COMPLETE THE UNIT STARTUP AND OWNER TRAINING.

AIR COOLED CONDENSING UNITS

A. PROVIDE AND INSTALL AIR-COOLED CONDENSING UNITS WITH CAPACITIES, FEATURES, AND ACCESSORIES AS SHOWN ON THE EQUIPMENT SCHEDULE. PROVIDE EQUIPMENT FROM THE FOLLOWING APPROVED MANUFACTURERS:
BRYANT, CARRIER, LENNOX, TRANE, YORK.

B. CONDENSING UNIT SHALL BE FACTORY ASSEMBLED AND TESTED. UNIT SHALL BE CONSTRUCTED WITH MANUFACTURER'S STANDARD CONSTRUCTION WITH ALL COMPONENTS, EQUIPMENT, AND ACCESSORIES. THE ENCLOSURE SHALL HAVE A CORROSION-PROTECTION COATING AND EXTERIOR FINISH.

C. PROVIDE THE FOLLOWING FEATURES WITH THE CONDENSING UNIT UNLESS NOTED OHERWISE ON THE EQUIPMENT SCHEDULE: LOW AMBIENT HEAD-PRESSURE CONTROL TO OPERATE AT 0 DEG. F., VIBRATION ISOLATION PADS, MOTOR STARTER, AND SERVICE DISCONNECT.

D. PROVIDE COMPLETE UNIT STARTUP AND COMMISSIONING INCLUDING CONTROLS CHECKOUT, LUBRICATION, FAN ROTATION, VIBRATION, REFRIGERATION SYSTEM, CLEANING, TESTING, AND BALANCING.

E. PROVIDE A FACTORY AUTHORIZED SERVICE REPRESENTATIVE TO COMPLETE THE UNIT STARTUP AND OWNER TRAINING.

COMMISSIONING

A. PROVIDE SYSTEM COMMISSIONING OF ALL MECHANICAL SYSTEMS CONSISTING OF FIELD VERIFICATION AND CERTIFYING THAT THE MECHANICAL SYSTEM IS PROPERLY INSTALLED AND IS FULLY OPERATIONAL.

B. PROVIDE A SYSTEM COMMISSIONING REPORT TO BE INCLUDED IN THE OPERATION AND MAINTENANCE MANUAL THAT INCLUDES A CHECKLIST OF ALL EQUIPMENT AND SYSTEMS.

ELECTRIC AND ELECTRONIC CONTROLS

A. PROVIDE AND INSTALL A COMPLETE AUTOMATIC CONTROL SYSTEM AS DESCRIBED IN THE DRAWINGS. ALL SYSTEM CONTROLS SHALL BE PROVIDED BY A SINGLE MANUFACTURER'S PRODUCTS. APPROVED MANUFACTURERS ARE: BRYANT, CARRIER, HONEYWELL, TRANE

TEST AND BALANCE

A. PROVIDE A COMPLETE AIR SYSTEM BALANCE, TEST, AND REPORT BY A NEBB, OR AABC CERTIFIED TEST AND BALANCE SUPERVISER WITH EXPERIENCE IN BALANCING SYSTEMS OF SIMILAR TYPES AND SIZE.

B. PROVIDE ALL NECESSARY TOOLS, EQUIPMENT, SHEAVE CHANGES, BELTS, AND ACCESSORIES TO COMPLETE WORK.

C. PROVIDE A REPORT SHOWING THE REQUIRED AND THE ACTUAL FLOWS. INCLUDE IN THE REPORT A DRAWING SHEMATIC OF THE SYSTEMS BALANCED, AND SYSTEMS CHECK REPORT. SUBMIT THE BALANCING REPORT FOR REVIEW PRIOR TO THE FINAL INSPECTION. ALL REPORTS SHALL BE INCLUDED IN THE OPERATION AND MAINTENANCE MANUAL.

MECHANICAL SPECIFICATIONS ②

METAL DUCTS

A. PROVIDE AND INSTALL SHEETMETAL DUCTS CONFORMING TO SMACNA, ASHRAE, AND AND NFPA 90A STANDARDS AS SHOWN ON THE MECHANICAL PLANS.

B. SHOP FABRICATE SQUARE, RECTANGULAR, ROUND, AND OVAL DUCTS, FITTINGS, HANGERS AND SUPPORTS ACCORDING TO SMACNA HVAC DUCT CONTRUCTION STANDARDS.

C. FACTORY APPLY DUCT LINER USING APPROVED SMACNA METHODS TO ALL REQUIRED DUCTS AS INDICATED IN THE INSULATION SECTION OF THIS SPECIFICATION.

D. PROVIDE TURNING VANES IN ALL RECTANGULAR DUCT FITTINGS OVER 45° ANGLES. PROVIDE 1.5 RADIUS ELBOWS ON ALL ROUND DUCTS.

E. SEAL ALL LONGITUDINAL AND TRANSVERSE JOINTS, SEAMS, AND CONNECTIONS WITH AN APPROVED SEALANT OR SEALING METHOD.

F. DUCT DIMENSIONS SHOWN ARE SHOWN ARE SHEETMETAL SIZES. NO INCREASE FOR DUCT LINER IS REQUIRED.

G. INSTALL DUCTWORK IN THE MOST EFFICIENT MANNER POSSIBLE, MINIMIZING JOINTS AND CHANGES IN DIRECTION.

H. PROTECT STORED AND INSTALLED DUCTWORK FROM DUST, DIRT, MOISTURE, AND CONSTRUCTION DEBRIS. CLEAN ALL DUCTWORK PRIOR TO OPERATION.

I. ALL ROUND DUCTS SHALL BE CONSTRUCTED OF SPIRAL WOUND SHEET METAL.

DUCT ACCESSORIES

A. PROVIDE AND INSTALL THE FOLLOWING DUCT ACCESSORIES WHERE INDICATED ON THE DRAWINGS: BACKDRAFT DAMPERS, BALANCING DAMPERS, FIRE DAMPERS, COMBINATION FIRE/SMOKE DAMPERS, ACTUATORS, TURNING VANES, ACCESS DOORS, FLEXIBLE DUCTS, AND ACCESSORIES HARDWARE.

B. PROVIDE CONCEALED DAMPER REGULATORS WITH REQUIRED LINKAGES AND COVER PLATES FOR EACH DAMPER LOCATED ABOVE A NON-ACCESSIBLE CEILING.

C. FIRE DAMPERS SHALL BE UL LISTED AND LABELED. FIRE DAMPERS SHALL BE RATED FOR 1-1/2 HOURS FOR FIRE RESISTIVE ASSEMBLIES RATED FOR 2 HOURS OR LESS AND RATED FOR 3 HOURS FOR FIRE RESISTIVIE ASSEMBLIES RATED 3 HOURS OR MORE. REPLACEABLE FUSIBLE LINKS RATED FOR 165° F SHALL BE USED. USE TYPE A, B, OR C AS INDICATED ON THE DRAWINGS.

E. PROVIDE TURNING VANES WHERE NOTED IN THE METAL DUCTS SPECIFICATION.

F. PROVIDE DUCT MOUNTED ACCESS DOORS AT ALL FIRE DAMPERS, FIRE/SMOKE DAMPERS, AND MOTORIZED CONTROL DAMPERS. ACCESS DOORS SHALL BE FACTORY CONSTRUCTED OF GALVANIZED SHEET METAL AND HAVE HINGES, GASKETS, SEALS, AND LATCHES.

G. FLEXIBLE DUCTS SHALL BE ROUND INSULATED, FACTORY-FABRICATED OR CORRUGATED ALUMINUM WITH AN OUTER JACKET, AND A SPIN COLLAR. THE MAXIMUM ALLOWABLE LENGTH OF FLEX DUCT SHALL BE 5'-0" AT ALL DIFFUSER TERMINATIONS.

H. PROVIDE INSTRUMENT TEST HOLES AT THE INLET AND OUTLET OF ALL FAN SYSTEMS.

I. INSTALL ALL DUCT ACCESSORIES ACCORDING TO THE MANUFACTURERS INSTRUCTIONS AND SMACNA STANDARDS.

EXHAUST FANS

A. PROVIDE AND INSTALL EXHAUST FANS WITH TYPE, CAPACITIES, FEATURES, AND ACCESSORIES AS SHOWN ON THE EQUIPMENT SCHEDULE. PROVIDE EQUIPMENT FROM THE FOLLOWING APPROVED MANUFACTURERS:
ACME, BROAN, CARNES, COOK. GREENHECK, PENN

B. ALL EXHAUST FANS SHALL DESIGNED, MANUFACTURED, TESTED, AND LABELED IN ACCORDANCE WITH UL REQUIREMENTS AND AMCA STANDARDS.

C. PROVIDE FACTORY FABRICATED AND ASSEMBLED EXHAUST FANS COMPLETE WITH ALUMINUM HOUSING, ALUMINUM FAN WHEEL, SHAFT, BEARINGS, DIRECT OR BELT DRIVE ASSEMBLY, PAINTED STEEL OR ALUMINUM GRILL, BACKDRAFT DAMPER, MOTOR, DISCONNECT SWITCH, MOUNTING BRACKETS, AND ACCESSORIES AS NOTED.

D. PROVIDE AND INSTALL REMOTE FAN SPEED CONTROL, PROGRAMMABLE TIMER, MANUAL TIMER, ON-OFF SWITCH AS INDICATED IN THE EQUIPMENT SCHEDULE.

E. PROVIDE COMPLETE FAN UNIT STARTUP AND COMMISSIONING INCLUDING CONTROLS CHECKOUT, LUBRICATION, FAN ROTATION, VIBRATION, CLEANING, TESTING, AND BALANCING.

AIR OUTLETS AND INLETS

A. PROVIDE FACTORY FABRICATED AND ASSEMBLED CEILING AIR DIFFUSERS AND GRILLES, WALL REGISTERS AND GRILLES, AND LOUVERS COMPLETE WITH ALL FEATURES AND ACCESSORIES AS NOTED IN THE SCHEDULE. PROVIDE EQUIPMENT FROM THE FOLLOWING APPROVED MANUFACTURERS:
AIROLITE, ANEMOSTAT, CARNES, COOLEY & HART, E.H. PRICE, J & J REGISTER, KRUEGER, LOUVERS AND DAMPERS, NAILOR, RUSKIN, TITUS, AND TUTTLE & BAILEY.

B. ALL AIR OUTLETS AND INLETS SHALL BE DESIGN, MANUFACTURERED, AND TESTED TO CONFORM TO ARI, ASHRAE, ADC, AND AMCA STANDARDS.

C. CEILING DIFFUSERS AND REGISTERS AND WALL REGISTERS AND GRILLES SHALL BE CONSTRUCTED OF GALVANIZED STEEL OR ALUMINUM AND SHALL HAVE A BAKED ENAMEL FINISH. COLOR SELECTION BY THE ARCHITECT OR OWNER.

D. LOUVERS SHALL BE CONSTRUCTED OF ALUMINUM EXTRUSIONS WITH WELDED CONNECTIONS OR STAINLESS STEEL FASTENERS. PROVIDE 1/2" ANODIZED ALUMINUM WIRE BIRD SCREEN. LOUVER FINISH SHALL BE ANODIZED ALUMINUM IN COLOR AS SELECTED BY THE ARCHITECT OR OWNER.

MECHANICAL SPECIFICATIONS ①

BASIC MECHANICAL REQUIREMENTS

A. COMPLY WITH THE REQUIREMENTS OF THE 2021 EDITION OF THE INTERNATIONAL BUILDING CODE (IBC), INTERNATIONAL MECHANICAL CODE (IMC), UNIFORM PLUMBING CODE (UPC), INTERNATIONAL FUEL GAS CODE (IFGC), AND INTERNATIONAL ENERGY CONSERVATION CODE (IECC), AND THE CURRENT NATIONAL ELECTRIC CODE (NEC) INCLUDING ALL STATE AMENDMENTS. COMPLY WITH THE AUTHORITY HAVING JURISDICTION AND ALL APPLICABLE CITY, COUNTY, STATE, AND FEDERAL CODES AND REGULATIONS IN EFFECT AT THE BID DATE.

B. PREPARE AND SUBMIT SHOP DRAWINGS FOR ALL MECHANICAL EQUIPMENT, VALVES, AND ACCESSORIES
INCLUDING MANUFACTURER'S NAME, CATALOG NUMBER, DESCRIPTION, SIZE, CAPACITY, ELECTRICAL REQUIREMENTS, OPERATION, AND MAINTENANCE INFORMATION. SHOP DRAWINGS SHALL BE REVIEWED AND STAMPED BY THE MECHANICAL AND GENERAL CONTRACTOR PRIOR TO ENGINEER'S REVIEW. EQUIPMENT SHALL NOT BE ORDERED UNTIL APPROVED SHOP DRAWINGS HAVE BEEN RECEIVED.

C. PREPARE COORDINATION DRAWINGS DETAILING ALL MAJOR EQUIPMENT AND SYSTEMS. INCLUDE EQUIPMENT CONNECTIONS, CLEARANCES, FIRE-RATED WALL OR FLOOR PENETRATIONS, CONCRETE PADS, AND SUPPORT DETAILS IN COORDINATION DRAWINGS. COORDINATION DRAWINGS SHALL BE IN CONJUNCTION WITH THE MECHANICAL, FIRE SPRINKLER (WHERE REQUIRED), ELECTRICAL, REFLECTED CEILINGS, AND ALL OTHER APPLICABLE TRADES.

D. PREPARE RECORD "AS BUILT" DOCUMENTS INCLUDING ALL CHANGES FROM THE ORIGINAL BID DOCUMENTS. SUBMIT COMPLETE "AS BUILT" DOCUMENTS AT THE COMPLETION OF THE PROJECT.

E. PROVIDE 2 SETS OF OPERATION AND MAINTENANCE (O & M) MANUALS CONTAINING INFORMATION FOR ALL MECHANICAL AND PLUMBING SYSTEMS. THE MANUALS SHALL CONTAIN A LIST OF ALL SUB-CONTRACTORS AND SUPPLIERS, EQUIPMENT CUT SHEETS, START-UP INFORMATION, BALANCING REPORTS, AND MAINTENANCE REQUIREMENTS. THE MANUALS SHALL BE HARD BACKED 3-RING BINDERS WITH THE PROJECT LABELED ON THE COVER AND SPLINE.

F. INSTALL ALL MECHANICAL EQUIPMENT AND MATERIALS IN COORDINATION WITH ALL OTHER TRADES. VERIFY ALL ELECTRICAL CONNECTIONS WITH THE ELECTRICAL CONTRACTOR PRIOR TO INSTALLATION.

G. PROVIDE AND INSTALL ACCESS DOORS WHERE EQUIPMENT, VALVES OR DAMPERS ARE CONCEALED BEHIND FINISHED SURFACES.

H. PROVIDE FACTORY-AUTHORIZED EQUIPMENT START-UP, COMMISSIONING, AND TRAINING OF ALL MECHANICAL EQUIPMENT.

I. INSTALL ALL SYSTEMS, MATERIALS, AND EQUIPMENT LEVEL AND PLUMB, PARALLEL AND PERPENDICULAR TO OTHER BUILDING SYSTEMS AND COMPONENTS. INSTALL ALL PIPING FREE FROM SAGS AND BENDS AND AT THE SLOPE INDICATED (WHERE REQUIRED). INSTALL DUCTWORK, PIPING, AND EQUIPMENT TO PROVIDE THE MAXIMUM POSSIBLE HEADROOM.

J. ALL WORK SHALL BE PERFORMED BY CERTIFIED AND SKILLED WORKERS WITH PRIOR EXPERIENCE IN THEIR PARTICULAR TRADE.

K. THE MECHANICAL SUB-CONTRACTOR SHALL PROVIDE WARRANTY THE ENTIRE MECHANICAL SYSTEM FOR A PERIOD OF ONE YEAR. INCLUDE THE WARRANTY AND ALL OTHER GUARANTEES AND WARRANTIES IN THE OPERATION AND MAINTENANCE MANUAL.

L. THE CONTRACTOR SHALL STORE AND PROTECT ALL EQUIPMENT AND MATERIALS DURING CONSTRUCTION AS REQUIRED AND SHALL REPAIR OR REPLACE ALL DAMAGED PIPING, EQUIPMENT, OR OTHER DAMAGE DURING CONSTRUCTION.

M. PROVIDE AND INSTALL ALL MECHANICAL EQUIPMENT, PIPING, FIXTURE, AND ACCESSORIES IN STRICT ACCORDANCE WITH THE MANUFACTURER'S INSTALLATION INSTRUCTIONS. PROVIDE ALL FITTINGS, VALVES, TRANSITIONS, AND OTHER DEVICES AS REQUIRED FOR A COMPLETE AND OPERATIONAL MECHANICAL SYSTEM.

N. SUBMIT FOR PRIOR APPROVAL FOR EQUIPMENT MANUFACTURERS NOT LISTED IN THE SPECIFICATIONS A MINIMUM OF FIVE PRIOR TO BID.

BASIC MECHANICAL MATERIALS AND METHODS

A. ALL PIPE AND PIPE FITTINGS SHALL BE NEW AND SHALL BE AMERICAN MADE WITH APPROVED LABELS. DELIVER, STORE, AND PROTECT DUCTWORK AND PIPING DURING CONSTRUCTION FROM DAMAGE, DIRT, AND MOISTURE.

B. SEAL ALL DUCT AND PIPE PENETRATIONS THROUGH WALLS AND FLOORS AIR TIGHT. CAULK ALL FIRE RATED PIPE PENETRATIONS WITH APPROVED FIRE-STOPPING MATERIAL.

C. CUT, CHANNEL, CHASE, AND DRILL FLOORS, WALLS, PARTITIONS, CEILINGS, AND OTHER SURFACES NECESSARY FOR PROPER INSTALLATION. REPAIR AS REQUIRED TO MATCH ADJACENT SURFACES.

HANGERS AND SUPPORTS

A. PROVIDE AND INSTALL DUCT SUPPORTS AND HANGERS AS REQUIRED FOR ALL DUCTWORK AND EQUIPMENT ACCORDING TO MANUFACTURERS STANDARDIZATION SOCIETY (MSS) AND SMACA STANDARDS.

VIBRATION ISOLATION AND SEISMIC CONTROLS

A. PROVIDE AND INSTALL VIBRATION ISOLATORS, FLEXIBLE CONNECTIONS, ISOLATION PADS, AND OTHER EQUIPMENT TO PREVENT NOISE AND VIBRATION TRANSMISSION.

DUCTWORK AND EQUIPMENT IDENTIFICATION

A. PROVIDE DUCT AND EQUIPMENT TAGS, LABELS, AND IDENTIFICATION INDICATING FLOW DIRECTION, AREA SERVED, SYSTEM TYPE AND OTHER IDENDIFYING INFORMATION. COMPLY WITH ASME PIPING EQUIPMENT IDENTIFICATION STANDARDS.

INSULATION

A. PROVIDE AND INSTALL GLASS FIBER DUCT INSULATION ACCORDING TO THE FOLLOWING SCHEDULE:
RECTANGULAR SUPPLY AND RETURN DUCTS:
1" DUCT LINER
ROUND SUPPLY AND RETURN DUCTS:
1-1/2" BLANKET WRAP WITH VAPOR BARRIER.
ROUND AND RECTANGULAR EXHAUST DUCTS:
NO INSULATION UNLESS OTHERWISE NOTED.
UNLINED SUPPLY, COMBUSTION, AND OUTSIDE AIR DUCTS:
1-1/2" BLANKET WRAP WITH VAPOR BARRIER.
EXTERIOR INSTALLED SUPPLY AND RETURN DUCTS:
2" BLANKET WRAP WITH VAPOR BARRIER.

B. DUCT LINER SHALL BE 1" THICK, 2 LBS. DENSITY, WITH ASTM C 1071, TYPE II COATED ACRYLIC SURFACE AND PRE-TEATED FOR ANTI-MICROBIAL AGENT TO PREVENT MICROBIAL GROWTH.

C. GLASS FIBER INSULATION SHALL HAVE A FLAME SPREAD RATING OF 25 OR LESS AND A SMOKE DEVELOPED RATING OF 50 OR LESS.

D. SEAL ALL ENDS AND JOINTS TO PROVIDE A COMPLETELY SEALED INSULATION SYSTEM.

E. SEAL JOINTS, BREAKS AND PUNCTURES WITH VAPOR BARRIER COMPOUND.

MECHANICAL GENERAL NOTES

1. PROVIDE ALL EQUIPMENT, PIPING, MATERIALS, LABOR, PERMITS, AND FEES TO CONSTUCT A COMPLETE AND OPERATIONAL MECHANICAL SYSTEM FOR THE ENTIRE PROJECT AS SHOWN ON THE DRAWINGS.
2. COORDINATE THE EXACT LOCATION OF ALL CEILING DIFFUSERS AND GRILLES WITH THE ARCHITECTURAL REFLECTED CEILING PLAN.
3. COORDINATE ALL WORK WITH THE GENERAL CONTRACTOR, PLUMBING SUB-CONTRACTOR, ELECTRICAL SUB-CONTRACTOR, AND ALL OTHER TRADES IN THE PROJECT.
4. ALL MECHANICAL INFORMATION IS NOT SHOWN ON THE MECHANICAL DRAWINGS. COORDINATE ALL WORK WITH THE ARCHITECTURAL, STRUCTURAL, PLUMBING, CIVIL, AND ELECTRICAL DRAWINGS.
5. MECHANICAL PLANS ARE SCHEMATIC IN NATURE AND THEREFORE DO NOT SHOW ALL DROPS, RISERS, AND OFFSETS. THE CONTRACTOR SHALL MAKE ALL REQUIRED MODIFICATIONS TO PROVIDE A COMPLETE AND OPERATIONAL MECHANICAL SYSTEM. MAJOR MODIFICATIONS SHALL BE REVIEWED AND APPROVED BY THE ENGINEER.
6. DO NOT RUN DUCTWORK ABOVE ELECTRICAL PANELS. PROVIDE 4-0" DEEP X 6'-6" HIGH CLEAR ACCESS SPACE IN FRONT OF PANELS. DO NOT RUN DUCTWORK IN ELECTRICAL ROOMS.
7. INSTALLATION OF ALL DUCTWORK SHALL BE COORDINATED WITH STRUCTURAL GIRDERS AND JOIST. DUCTWORK SHALL BE RUN WITHIN STRUCTURE SPACE WHERE SHOWN ON THE PLANS.
8. COORDINATE ALL FLOOR, CEILING, AND ROOF PENETRATIONS WITH THE STRUCTURAL PLANS. MAINTAIN DUCTWORK TIGHT TO THE STRUCTURE. OFFSET INTO THE JOIST SPACE WHERE SHOWN ON THE PLANS.
9. REFER TO CEILING SUPPLY DIFFUSER AND RETURN AIR GRILL DETAIL 1/M200.
10. REFER TO SIDEWALL SUPPLY REGISTER DETAIL 4/M200.

Mortensen Engineering, Inc.
251 E South 830 East
Smithfield, Utah 84335
(435) 770-5534

LICENSED PROFESSIONAL ENGINEER
No. 176904
FLORIAN R. MORTENSEN
STATE OF UTAH

DATE
June 6, 2024

PROJECT TITLE
HOBBLED DOG CIDERY
625 West 8300 South
Paradise, Utah 84328
DWA Construction / Mansfield Architectural Services

SHEET TITLE
MECHANICAL NOTES & SPECIFICATIONS

PROJECT NUMBER

REVISIONS

SHEET NUMBER
M001

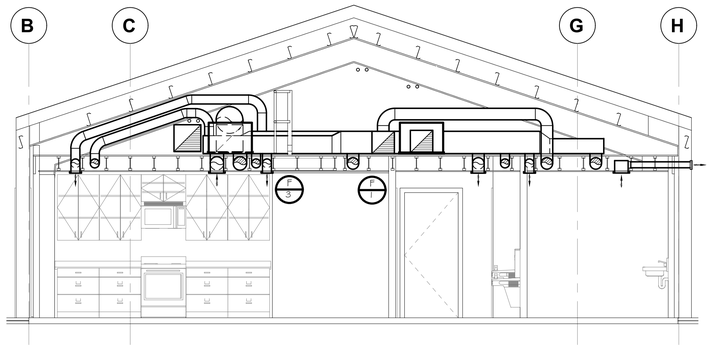

A M101 MECHANICAL SECTION
SCALE: 1/4" = 1' - 0"

REFERENCE NOTES

1. CONCRETE EQUIPMENT PAD.
2. DUCTWORK TO RUN IN FLOOR JOIST (TYPICAL).

REFERENCE NOTES

1. SUPPLY AND RETURN AIR DUCTS UP TO MEZZANINE. SEE SHEET M102 FOR CONTINUATION.
2. EXHAUST DUCT LOUVER.
3. PROGRAMMABLE THERMOSTAT.
4. MOUNT BOTTOM OF GRILL AT 6" ABOVE FLOOR.
5. COMBUSTION AIR AND FLUE PIPING UP IN WALL. SEE SHEET M102 FOR CONTINUATION.
6. MEZZANINE ACCESS LADDER.
7. REFRIGERANT PIPING UP TO MEZZANINE. SEE SHEET M102 FOR CONTINUATION.

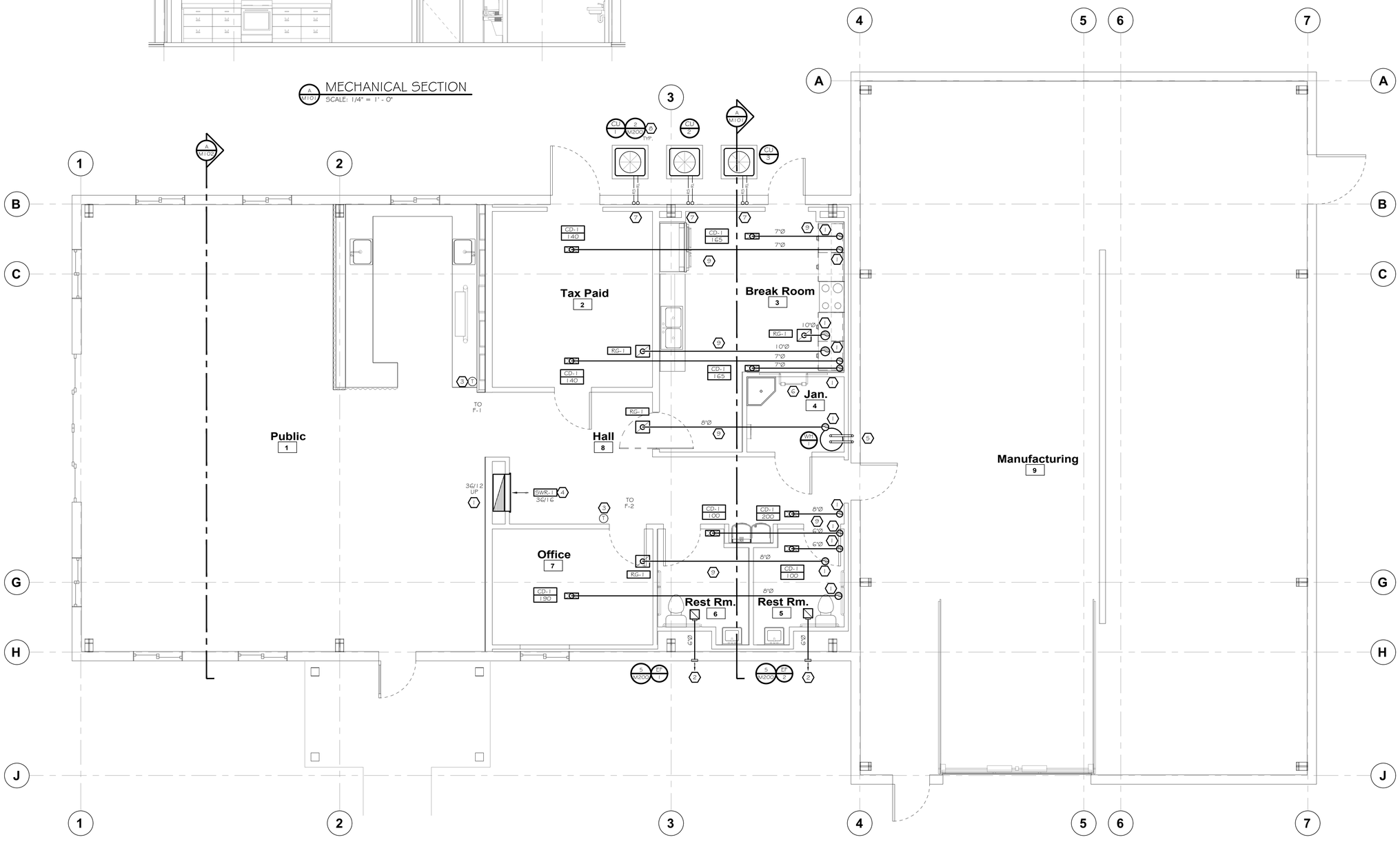

MAIN FLOOR MECHANICAL PLAN
SCALE: 1/4" = 1' - 0"

Mortensen Engineering, Inc.
251 South 830 East
Smithfield, Utah 84335
(435) 770-5534

LICENSED PROFESSIONAL ENGINEER
No. 11969
JEFFREY R. MORTENSEN
STATE OF UTAH

DATE
June 6, 2024

PROJECT TITLE
HOBBLED DOG CIDERY
625 West 8300 South
Paradise, Utah 84328
DWA Construction / Mansfield Architectural Services

SHEET TITLE
MAIN FLOOR MECHANICAL PLAN

PROJECT NUMBER

REVISIONS

SHEET NUMBER
M101

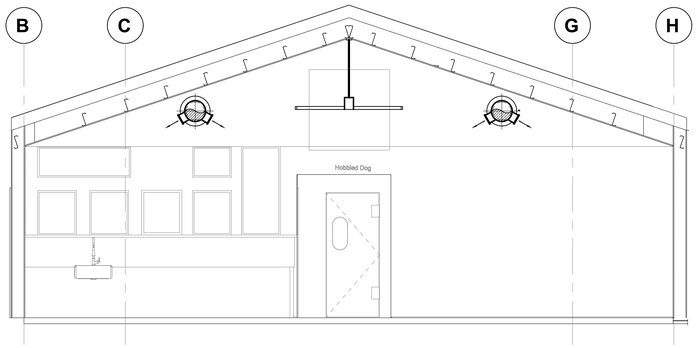

A M102 MECHANICAL SECTION
SCALE: 1/4" = 1' - 0"

REFERENCE NOTES

- 8 REFRIGERANT PIPING DOWN TO MAIN FLOOR. SEE SHEET M101 FOR CONTINUATION.
- 9 EXTEND REFRIGERANT PIPING TO DX COILS.
- 10 PROVIDE SHEET METAL COLLAR AT WALL PENETRATION.

REFERENCE NOTES

- 1 EQUIPMENT SERVICE AREA. KEEP CLEAR OF DUCTS AND PIPES.
- 2 EXTEND FLUE/COMBUSTION PIPING UP IN WALL TO ABOVE ADJACENT ROOF.
- 3 MOTORIZED DAMPER.
- 4 MEZZANINE MECHANICAL ROOM ACCESS DOOR.
- 5 EXPOSED SPIRAL WOUND ROUND SUPPLY DUCT.
- 6 SUPPLY OR RETURN DUCT DOWN TO MAIN FLOOR. SEE SHEET M101 FOR CONTINUATION.
- 7 KEEP DUCTS AND PIPING HIGH IN MEZZANINE SPACE FOR CLEAR ACCESS.

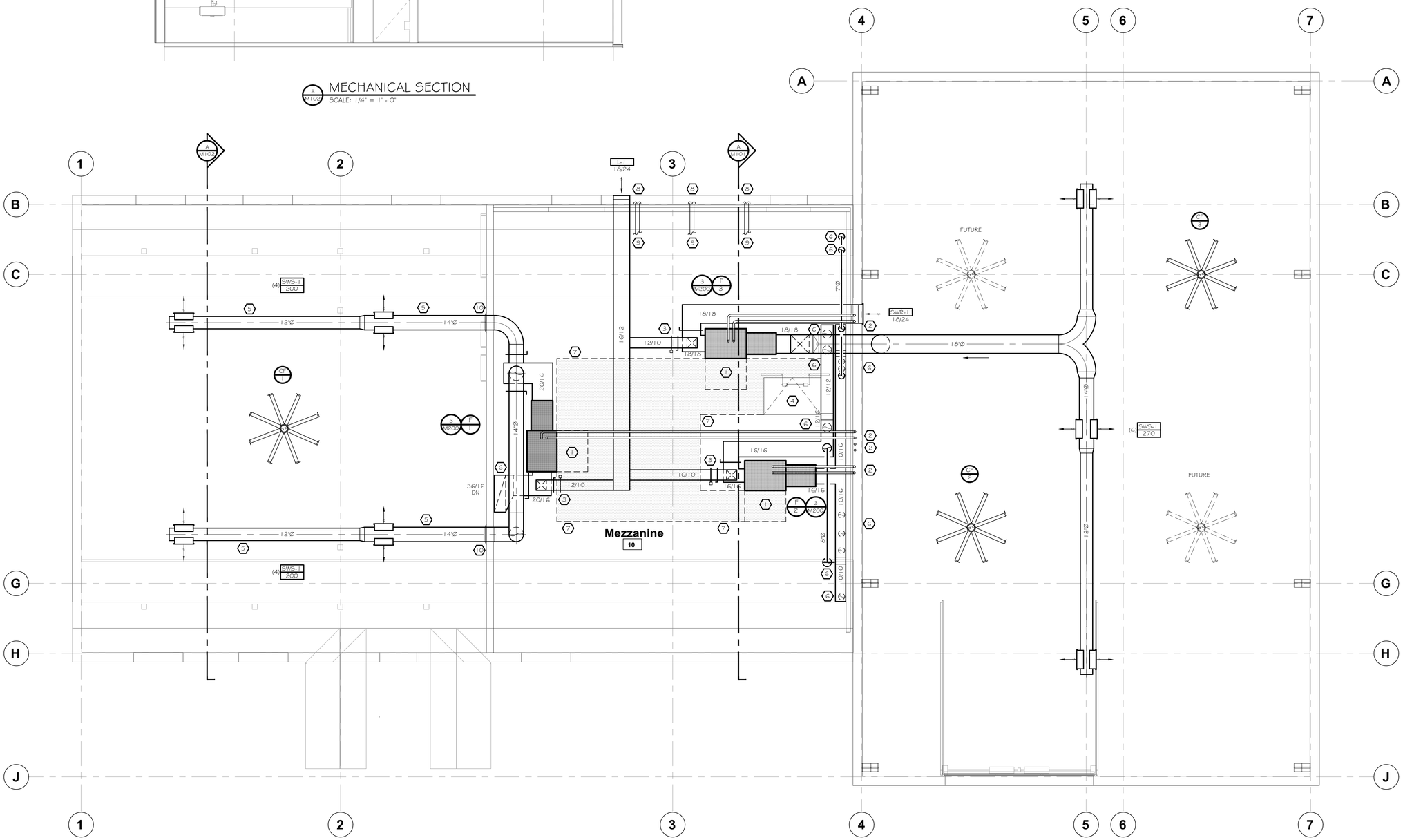

MEZZANINE MECHANICAL PLAN
SCALE: 1/4" = 1' - 0"

Mortensen Engineering, Inc.
251 E. South 800 East
Smithfield, Utah 84335
(435) 770-5534

LICENSED PROFESSIONAL ENGINEER
No. 11969
J. LARRY R. MORTENSEN
STATE OF UTAH

DATE
June 6, 2024

PROJECT TITLE
HOBBLED DOG CIDERY
625 West 8300 South
Paradise, Utah 84328
DWA Construction / Mansfield Architectural Services

SHEET TITLE
MEZZANINE
MECHANICAL PLAN

PROJECT NUMBER

REVISIONS

SHEET NUMBER
M102

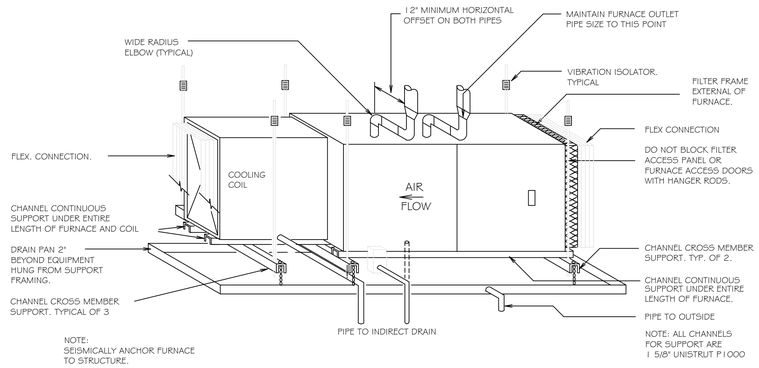

3 M200 HORIZONTAL FURNACE
NOT TO SCALE

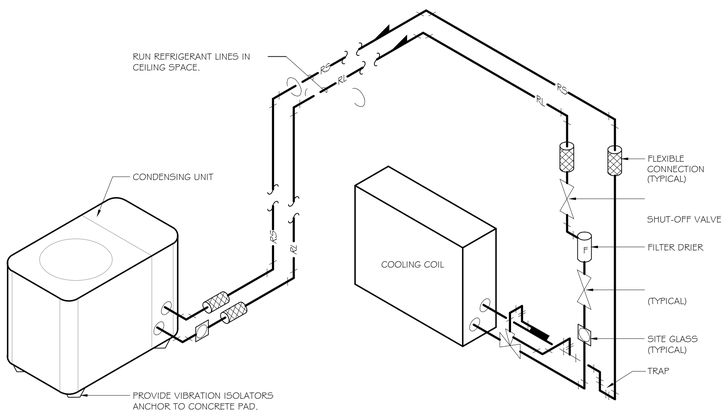

2 M200 TYPICAL REFRIGERANT SCHEME
NOT TO SCALE

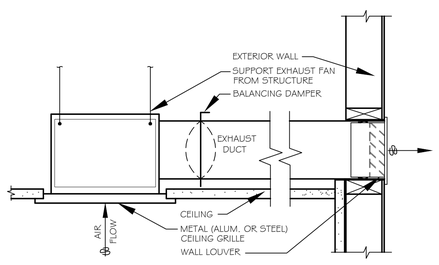

5 M200 CEILING EXHAUST FAN DETAIL
NOT TO SCALE

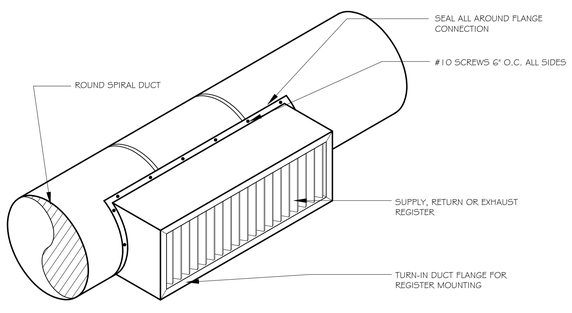

4 M200 SIDEWALL REGISTER DETAIL
NOT TO SCALE

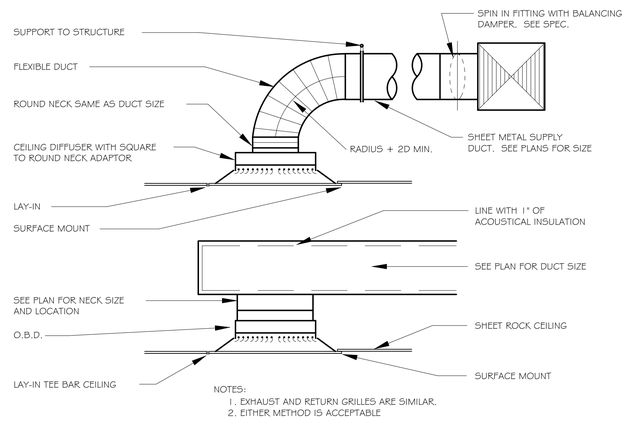

NOTES:
1. EXHAUST AND RETURN GRILLES ARE SIMILAR.
2. EITHER METHOD IS ACCEPTABLE

1 M200 CEILING DIFFUSER DETAIL
NOT TO SCALE

REGISTER AND GRILLE SCHEDULE

SYMBOL	MANUFACTURER	MODEL	DESCRIPTION	MAX. NC	NECK SIZE	MAX. CFM
CD-1	PRICE	5CD	LOUVERED FACE CEILING DIFFUSERS REMOVABLE FACE & CORE. W/O.B.D. FRAME SHALL BE FOR SURFACE OR LAY-I IN MOUNTING AS REQUIRED BY CEILING TYPE. LAY-IN FRAMES SHALL BE 24" X 24", 24" X 12", OR 12" X 12" AS REQ'D. TO FIT CEILING TILE SPACE AVAILABLE. PROVIDE ROUND NECK ADAPTER.	30	6 x 6 8 x 8 9 x 9 10 x 10 6 x 18 12 x 12 15 x 15 18 x 18	125 220 250 320 350 425 625 900
RG-1	PRICE	535	LOUVERED FACE CEILING RETURN AIR UNIT, REMOVABLE FACE & CORE. FRAME SHALL BE FOR SURFACE OR LAY-IN MOUNTING AS REQUIRED BY CEILING TYPE. LAY-IN FRAMES SHALL BE 24" X 24", 24" X 12" OR 12" X 12" AS REQUIRED TO FIT CEILING TILE SPACE AVAILABLE. AIR QUANTITY SHALL MATCH ROOM SUPPLY OR EXHAUST AIR QUANTITY.	30	10 x 10 12 x 12 14 x 14 10 x 22 16 x 16 18 x 18 24 x 24 36 x 24	350 500 550 625 725 900 1300 2200
L-1	AIROLITE	KG774	WALL LOUVER. STATIONARY 4" THICK 45 BLADE 12 GA. EXT. ALUMINUM BLADES, 8 GA. EXT. JAMBS. CHANNEL FRAME, BRONZE ANODIZED FINISH WITH BIRD SCREEN. COLOR BY ARCHITECT.	30	SEE PLANS	
SWS-1	PRICE	510	SIDEWALL SUPPLY DIFFUSER. DOUBLE DEFLECTION SUPPLY REGISTER. VERTICAL FRONT WITH HORIZONTAL REAR DEFLECTION VANES SPACED AT 3/4" O.C. ADJUSTABLE. COMPLETE W/ O.B.D.	30	10 x 8 12 x 8 16 x 8 20 x 8	350 500 750 1000
SWR-1	PRICE	91L	HEAVY DUTY SIDEWALL RETURN AIR GRILLE. STATIONARY HORIZONTAL DEFLECTION VANES SPACED AT 1/2" O.C. 1-1/4" FLANGE. INSTALL INTERMEDIATE SUPPORT CHANNELS. FRAME TO BE MADE OF 16 GAUGE STEEL.	30	SEE PLANS	

FURNACE SCHEDULE

SYMBOL	MANUFACTURER & MODEL NO.	FUEL TYPE	BTU INPUT	BTU OUTPUT	CFM	MINIMUM OUTSIDE AIR CFM	HP	SP	VOLTS/PHASE CYCLE	COIL MODEL NO.	COMMENTS
F 1	YORK TM9E	PROPANE	80,000	76,000	1600	300	1/2	0.8	115/1/60	-	(1)(2)(3)(4)
F 2	YORK TM9E	PROPANE	60,000	57,000	1200	250	1/2	0.8	115/1/60	-	(1)(2)(3)(4)
F 3	YORK TM9E	PROPANE	120,000	114,000	1600	300	1/2	0.8	115/1/60	-	(1)(2)(3)(4)

(1) RATINGS BASED ON 4800' ELEVATION.
(2) PROVIDE 7-DAY PROGRAMMABLE THERMOSTAT WITH AUTOMATIC HEATING AND COOLING CHANGEOVER
(3) PROVIDE BOTTOM RETURN AND SIDE PLENUM CONNECTIONS, FILTER HOUSING, AND CONCENTRIC VENT KIT..
(4) FURNACE, COIL, AND CONDENSING UNIT SHALL BE BY THE SAME MANUFACTURER.

CONDENSING UNIT SCHEDULE

SYMBOL	MANUFACTURER & MODEL	BTU CAPACITY	REFRIGERANT TYPE	VOLTS/PHASE/CYCLES	MCA	SEER	COMMENTS
CU 1	YORK YCE48	48,000	R-410A	208/1/60Hz	25.7	14	(1)(2)(3)(4)(5))(6)
CU 2	YORK YCE36	36,000	R-410A	208/1/60Hz	23.5	14	(1)(2)(3)(4)(5))(6)
CU 3	YORK YCE48	48,000	R-410A	208/1/60Hz	25.7	14	(1)(2)(3)(4)(5))(6)

(1) ALL CONDITIONS AT 4800' ELEVATION.
(2) 95°F. AMBIENT - 40 SST.
(3) UNIT COMPLETE WITH STARTER.
(4) FURNACE, DX EVAPORATOR, AND CONDENSING UNIT SHALL BE COORDINATED TO PROVIDE A MATCHED COIL / CU SYSTEM.
(5) VERIFY VOLTAGE AND PHASE AVAILABLE WITH ELECTRICAL CONTRACTOR PRIOR TO ORDERING OF ANY EQUIPMENT.
(6) SIZE REFRIGERANT PIPING AS PER MANUFACTURER'S RECOMMENDATIONS.

EXHAUST FAN SCHEDULE

SYMBOL	MANUFACTURER	MODEL	CFM	STATIC PRESSURE IN. WG.	H.P.	RPM	VOLTS/PHASE/CYCLE	COMMENTS
EF 1	GREENHECK	CEILING SP-A190	120	0.375	113 WATTS	1400	115/1/60	(1)(2)(3)
EF 2	GREENHECK	CEILING SP-A190	120	0.375	113 WATTS	1400	115/1/60	(1)(2)(3)

(1) ALL CAPACITIES AT 4800 FT. ELEVATION.
(2) CEILING EXHAUST FAN
PROVIDE GRAVITY BACKDRAFT DAMPER, INTEGRAL THERMAL OVERLOAD PROTECTION AND VARIABLE SPEED CONTROL.
(3) ON-OFF SWITCH BY ELECT.

INDUSTRIAL CEILING FAN SCHEDULE

SYMBOL	MANUFACTURER	MODEL	CFM	STATIC PRESSURE IN. WG.	H.P.	RPM	VOLTS/PHASE/CYCLE	COMMENTS
CF 1	BIG ASS FANS	MODEL 16 6'	13K	0.10	42 WATTS	1750	208/1/60	(1)(2)
CF 2	KELLEY	FUSION HVLS 6'	35K	0.10	1.0	1750	208/1/60	(1)(2)(3)
CF 3	KELLEY	FUSION HVLS 6'	35K	0.10	1.0	1750	208/1/60	(1)(2)(3)

(1) ALL CAPACITIES AT 4800 FT. ELEVATION.
(2) INDUSTRIAL CEILING FAN - REVERSIBLE COMPLETE WITH INTEGRAL VFD.
PROVIDE INTEGRAL THERMAL OVERLOAD PROTECTION AND CEILING MOUNT.
(3) POWDER COATED - COLOR SELECTED BY ARCHITECT/OWNER.

Mortensen Engineering, Inc.
251 E South 800 East
Smithfield, Utah 84335
(435) 770-5534

LICENSED PROFESSIONAL ENGINEER
No. 176901
JEFFREY R. MORTENSEN
STATE OF UTAH

DATE
June 6, 2024

PROJECT TITLE
HOBBLED DOG CIDERY
625 West 8300 South
Paradise, Utah 84328
DWA Construction / Mansfield Architectural Services

SHEET TITLE
MECHANICAL DETAILS & SCHEDULES

PROJECT NUMBER

REVISIONS

SHEET NUMBER
M200

PLUMBING SYMBOL LEGEND

SOIL, WASTE-ABOVE GRADE	
SOIL, WASTE-BELOW GRADE	
VENT	
COLD WATER	
HOT WATER	
HOT WATER CIRCULATE	
GAS	G
RAIN WATER-ABOVE GRADE	RW
RAIN WATER-BELOW GRADE	RW
OVERFLOW RAIN WATER-ABOVE GRADE	ORW
DRAIN LINE	D
WALL HYDRANT	W.H.
HOSE BIBB	H.B.
CLEANOUT TO GRADE	C.O.T.G.
FLOOR CLEANOUT	F.C.O.
WALL CLEANOUT	W.C.O.
SHUT OFF VALVE	
CHECK VALVE	
ANGLE VALVE	
VENTURI	
BALANCING OR PLUG COCK	
FLOW SETTER	
GAS COCK	
BUTTERFLY VALVE	
BALL VALVE	
RELIEF VALVE	
PRESSURE REDUCING VALVE	
GAUGE COCK	
STRAINER	
FLEXIBLE CONNECTION	
PRESSURE GAUGE	
THERMOMETER	
REDUCER CONCENTRIC	
REDUCER ECCENTRIC	
90° ELBOW UP	
90° ELBOW DOWN	
90° TEE UP	
90° TEE DOWN	
UNION	
CAPPED PIPE	
ANCHOR	

PLUMBING ABREVIATIONS

BHP	BRAKE HORSE POWER	NTS	NOT TO SCALE
BTU	BRITISH THERMAL UNIT	NO	NUMBER
CLG	COOLING	OZ	OUNCE
CW	COLD WATER	PSI	POUNDS PER SQUARE INCH
DP	DEPTH OR DEEP	PSIA	PSI ABSOLUTE
ID	INSIDE DIAMTER	PSIG	PSI GAUGE
OD	OUTSIDE DIAMTER	PRESS	PRESSURE
(E)	EXISTING	PD	PRESSURE DROP
EFF	EFFICIENCY	RECIRC	RECIRCULATE
ELEV	ELEVATION	RPM	REVOLUTIONS PER MINUTE
(F)	FUTURE	RW	RAIN WATER
F	FARENHEIT	SCW	SOFT COLD WATER
FC	FLEXIBLE CONNECTION	SF	SAFETY FACTOR
FT	FEET	SL	SEA LEVEL
GAL	GALLON(S)	SPEC	SPECIFICATION(S)
GPH	GALLONS PER HOUR	SQ	SQUARE
GPM	GALLONS PER MINUTE	STD	STANDARD
HD	HEAD	SPLY	SUPPLY
HT	HEIGHT	TEMP	TEMPERATURE
HTG	HEATING	TD	TEMP. DROP OR DIFF.
HP	HORSE POWER	R	THERMAL RESITANCE
HW	HOT WATER	T	TIME
LG	LENGTH	VAC	VACUUM
MAX	MAXIMUM	VENT	VENT, VENTILATION
MIN	MINIMUM	VERT	VERTICAL
NO	NORMALLY OPEN	VOL	VOLUME
NC	NORMALLY CLOSED	WTR	WATER
N/A	NOT APPLICABLE	WT	WEIGHT
NIC	NOT IN CONTRACT	YR	YEAR

PLUMBING SPECIFICATIONS ③

FIRE SPRINKLER SYSTEM

A. NOT INCLUDED IN THIS CONTRACT.

PLUMBING SPECIALTIES

A. PROVIDE AND INSTALL WATER PRESSURE REGULATING VALVE RATED FOR INITIAL WORKING PRESSURE OF 150 PSIG WITH INLET AND OUTLET SHUTOFF VALVES, PRESSURE GAUGE, AND DRAIN VALVE. PROVIDE BACKFLOW PREVENTION DEVICE. REFER TO WATER STATION MAIN DETAIL FOR REQUIREMENTS.

B. PROVIDE AND INSTALL CLEANOUTS AND COVER PLATES WHERE INDICATED ON THE DRAWINGS. INSTALL A CLEANOUT AT EACH PLUMBING FIXTURE. CLEANOUT FLOOR COVER PLATES SHALL BE MOUNTED FLUSH WITH THE FLOOR. COORDINATE CLEANOUT COVER PLATES WITH WALL OR FLOOR SURFACE FINISH.

WATER HEATERS

A. PROVIDE A WATER HEATER AS SHOWN ON THE DRAWINGS THAT COMPLIES WITH ASME BOILER AND PRESSURE VESSEL CODE, UL LISTING, AGA STANDARDS, AND ASHRAE ENERGY STANDARDS.

B. SUBMIT MANUFACTURERS CUTSHEET FOR REVIEW AND APPROVAL INCLUDING MANUFACTURER, TYPE, MODEL NUMBER, CAPACITY, ELECTRICAL REQUIREMENTS, AND OPTIONS.

C. INSTALL WATER HEATER LEVEL AND PLUMB ON CONCRETE EQUIPMENT PAD UNLESS OTHERWISE NOTED. INSTALL WATER HEATER ACCORDING TO THE MANUFACTURER'S INSTALLATION INSTRUCTIONS. ANCHOR WATER HEATER TO EQUIPMENT PAD. INSTALL EARTHQUAKE BRACING SECURE TO STRUCTURAL MEMBERS.

D. INSTALL WATER HEATER WITH RELIEF VALVE, SHUTOFF VALVES, UNIONS, THERMOMETERS, DRAIN LINE, GAS CONNECTION, VENT AND RECIRCULATION SYSTEM AS INDICATED ON THE DRAWINGS.

PLUMBING SPECIFICATIONS ②

VALVES

A. PROVIDE AND INSTALL BALL SHUTOFF VALVES WHERE SHOWN ON PLANS FOR LINES 3" AND SMALLER. BALL VALVES SHALL BE MSS SP-110, CLASS 150 BRONZE BODY AND BONNET AND VINYL-COVERED STEEL HANDLE.

B. PROVIDE AND INSTALL BUTTERFLY VALVES WHERE SHOWN ON PLANS FOR LINES 4" AND LARGER. BUTTERFLY VALVES SHALL BE MSS SP-67, ASTM A 126 CAST-IRON BODY AND BONNET WITH EPDM SEALS.

FUEL GAS PIPING

A. COORDINATE INSTALLATION OF GAS YARD LINE AND GAS METER WITH THE GAS COMPANY. WORK TO BE PERFORMED BY THE GAS COMPANY PAID BY THE CONTRACTOR.

B. COMPLY WITH NFPA 54 'NATIONAL FUEL GAS CODE', LOCAL GAS COMPANY REQUIREMENTS, AND ALL OTHER APPLICABLE CODES FOR GAS PIPING MATERIALS, COMPONENTTS, INSTALLATIONS, INSPECTIONS, TESTING, AND PURGING.

C. GAS PIPING SHALL BE SEAMLESS, GRADE B, SCHEDULE 40 BLACK STEEL WITH THREADED FITTINGS.

D. INSTALL SHUTOFF VALVE DOWNSTREAM OF THE GAS METER OUTSIDE OF THE BUILDING.

F. INSTALL 2 PSIG - TO - 4 OZ. GAS PRESSURE REGULATOR WHERE SHOWN ON THE DRAWINGS. INSTALL AND VENT AS REQUIRED BY MANUFACTURERS INSTRUCTIONS.

G. INSTALL GAS SHUTOFF VALVE AT ALL GAS APPLIANCES. CONNECT TO APPLIANCE WITH APPROVED FLEXIBLE CONNECTION. INSTALL TEE FITTING SEDIMENT TRAPS WITHIN 6' OF EACH APPLIANCE.

PLUMBING PIPING

A. WATER DISTRIBUTION PIPING - BELOW GROUND (150 PSIG):
3-1/2" AND SMALLER - USE TYPE K SOFT OR HARD COPPER TUBE WITH CAST COPPER ALLOY BRAZED JOINT PRESSURE FITTINGS.

B. WATER DISTRIBUTION PIPING - ABOVE GROUND (125 PSIG):
3-1/2" AND SMALLER - USE TYPE L HARD COPPER TUBE WITH CAST COPPER ALLOY BRAZED JOINT PRESSURE FITTINGS. (PEX PIPING ALTERNATE BID)

C. WASTE AND VENT PIPING - BELOW GROUND (10-FOOT HEAD OF WATER):
2" TO 6" - USE ACRYLONITRILE-BUTADIENE-STYRENE (ABS) PLASTIC PIPE WITH ABS SOCKET-TYPE DRAIN, WASTE, AND VENT PIPE PATTERN FITTINGS WITH SOLVENT CEMENTED JOINTS.

D. WASTE AND VENT PIPING - ABOVE GROUND (10-FOOT HEAD OF WATER):
2" TO 8" - USE HUB-AND-SPIGOT CAST-IRON SOIL PIPE WITH CAST IRON SOIL PIPE FITTINGS, NEOPRENE RUBBER GASKETS, AND COMPRESSION JOINTS.

E. STORM DRAINAGE PIPING - ABOVE GROUND (10-FOOT HEAD OF WATER):
2" TO 8" - USE HUBLESS CAST-IRON SOIL PIPE WITH CAST IRON SOIL PIPE FITTINGS, HEAVY-DUTY, SHEILDED, STAIN-LESS-STEEL COUPLINGS.

F. INSTALL HANGERS FOR HORIZONTAL COPPER AND CAST IRON PIPING WITH THE FOLLOWING MAXIMUM SPACING AND MINIMUM ROD SIZES:

NOM. PIPE SIZE	MAX. SPAN	MIN. ROD DIA.
3/4"	6'	3/8"
1"	6'	3/8"
1-1/2"	6'	3/8"
2"	12'	3/8"
2-1/2"	12'	1/2"
3"	12'	1/2"
3-1/2"	12'	1/2"
4"	12'	5/8"
5"	12'	5/8"
6"	12'	3/4"

SUPPORT VERTICAL PIPE AND TUBING AT EACH FLOOR.

G. SUPPORT HORIZONTAL ABS AND PVC PIPING WITH PIPE HANGERS LOCATED AT 4' MAXIMUM SPAN.

H. CLEAN, FLUSH, AND TEST ALL WATER DISTRIBUTION PIPING TO 1-1/2 TIMES THE OPERATING PRESSURE FOR A TIME PERIOD OF 4 HOURS. PURGE AND DISINFECT POTABLE WATER SYSTEMS WITH A WATER/CHLORINE SOLUTION IN ACCORDANCE WITH THE LOCAL HEALTH CODE REQUIREMENTS. TEST AND SUBMIT SATISFACTORY REPORT PRIOR TO BUILDING OCCUPANCY.

I. CLEAN, FLUSH, AND TEST THE WASTE AND VENT PIPING SYSTEM TO 10 FEET HEAD OF WATER.

PLUMBING FIXTURES

A. PROVIDE AND INSTALL PLUMBING FIXTURES WHERE INDICATED ON THE DRAWINGS FOR A COMPLETE PLUMBING SYSTEM. PROVIDE ALL REQUIRED CARRIERS, SUPPORTS, EQUIPMENT, HANGERS, FITTINGS, TRIM, STOPS, AND ACCESSORIES ASSOCIATED WITH THE PLUMBING FIXTURES. COORDINATE THE COLOR STYLE, COLOR, AND ACCESSORIES OF EACH FIXTURE WITH THE BUILDING OWNER. ALL FIXTURES NOTED AS ACCESSIBLE SHALL COMPLY WITH A.D.A. REQUIREMENTS. COORDINATE ALL ELECTRICAL REQUIREMENTS WITH THE ELECTRICAL SUB-CONTRACTOR. INSTALL ALL PLUMBING FIXTURES PLUMB, LEVEL, AND ACCORDING TO THE MANUFACTURER'S INSTALLATION INSTRUCTIONS. REFER TO THE PLUMBING FIXTURE SCHEDULE.

B. PROVIDE PLUMBING FIXTURES FROM THE FOLLOWING MANUFACTURERS:
WATER CLOSETS AND URINALS:
AMERICAN STANDARD, BRIGGS, CRANE, ELJER, KOHLER
LAVATORIES:
ACORN,AMERICAN STANDARD, BRIGGS, CRANE, ELJER, ELKAY, KOHLER
SINKS AND SERVICE SINKS:
AMERICAN STANDARD, BRIGGS, CRANE, ELJER, ELKAY, KOHLER
DRINKING FOUNTAINS AND WATER COOLERS:
ELKAY, HALSEY TAYLOR, HAWS, OASIS, SUNROC
FLUSHOMETERS:
SLOAN, ZURN
FAUCETS:
AMERICAN STANDARD, BRIGGS, CHICAGO, CRANE, DELTA, ELJER, ELKAY, GERBER, KOHLER, MOEN, PRICE PFISTER, SYMMONS, T & S BRASS

C. SUBMIT MANUFACTURERS CUTSHEET FOR REVIEW AND APPROVAL FOR EACH PLUMBING FIXTURE INCLUDING MANUFACTURER, MODEL, STYLE, OPTIONS, AND ACCESSORIES.

PLUMBING SPECIFICATIONS ①

BASIC PLUMBING REQUIREMENTS

A. COMPLY WITH THE REQUIREMENTS OF THE 2021 EDITION OF THE INTERNATIONAL BUILDING CODE (IBC), INTERNATIONAL MECHANICAL CODE (IMC), INTERNATIONAL PLUMBING CODE (IPC), INTERNATIONAL FUEL GAS CODE (IFGC), AND INTERNATIONAL ENERGY CONSERVATION CODE (IECC), AND THE CURRENT NATIONAL ELECTRIC CODE (NEC) INCLUDING ALL STATE AMENDMENTS. COMPLY WITH THE AUTHORITY HAVING JURISDICTION AND ALL APPLICABLE CITY, COUNTY, STATE, AND FEDERAL CODES AND REGULATIONS IN EFFECT AT THE BID DATE.

B. PREPARE AND SUBMIT SHOP DRAWINGS FOR ALL PLUMBING FIXTURES, EQUIPMENT, VALVES, AND ACCESSORIES INCLUDING MANUFACTURER'S NAME, CATALOG NUMBER, DESCRIPTION, SIZE, CAPACITY, ELECTRICAL REQUIREMENTS, OPERATION, AND MAINTENANCE INFORMATION. SHOP DRAWINGS SHALL BE REVIEWED AND STAMPED BY THE PLUMBING AND GENERAL CONTRACTOR PRIOR TO ENGINEER'S REVIEW. FIXTURES, EQUIPMENT, ETC. SHALL NOT BE ORDERED UNTIL APPROVED SHOP DRAWINGS HAVE BEEN RECEIVED.

C. PREPARE COORDINATION DRAWINGS DETAILING ALL MAJOR EQUIPMENT AND SYSTEMS. INCLUDE EQUIPMENT CONNECTIONS, CLEARANCES, FIRE-RATED WALL OR FLOOR PENETRATIONS, CONCRETE PADS, AND SUPPORT DETAILS IN COORDINATION DRAWINGS. COORDINATION DRAWINGS SHALL BE IN CONJUNCTION WITH THE MECHANICAL, FIRE SPRINKLER (WHERE REQUIRED), ELECTRICAL, REFLECTED CEILINGS, AND ALL OTHER APPLICABLE TRADES.

D. PREPARE RECORD "AS BUILT" DOCUMENTS INCLUDING ALL CHANGES FROM THE ORIGINAL BID DOCUMENTS. SUBMIT COMPLETE "AS BUILT" DOCUMENTS AT THE COMPLETION OF THE PROJECT.

E. PROVIDE 2 SETS OF OPERATION AND MAINTENANCE (O & M) MANUALS CONTAINING INFORMATION FOR ALL MECHANICAL AND PLUMBING SYSTEMS. THE MANUALS SHALL CONTAIN A LIST OF ALL SUB-CONTRACTORS AND SUPPLIERS, EQUIPMENT CUT SHEETS, START-UP INFORMATION, BALANCING REPORTS, AND MAINTENANCE REQUIREMENTS. THE MANUALS SHALL BE HARD BACKED 3-RING BINDERS WITH THE PROJECT LABELED ON THE COVER AND SPLINE.

F. INSTALL ALL PLUMBING EQUIPMENT AND MATERIALS IN COORDINATION WITH ALL OTHER TRADES. VERIFY ALL ELECTRICAL CONNECTIONS WITH THE ELECTRICAL CONTRACTOR PRIOR TO INSTALLATION.

G. PROVIDE AND INSTALL ACCESS DOORS WHERE EQUIPMENT OR VALVES ARE CONCEALED BEHIND FINISHED SURFACES.

H. PROVIDE FACTORY-AUTHORIZED EQUIPMENT START-UP, COMMISSIONING, AND TRAINING OF ALL PLUMBING EQUIPMENT.

I. INSTALL ALL SYSTEMS, MATERIALS, AND EQUIPMENT LEVEL AND PLUMB, PARALLEL AND PERPENDICULAR TO OTHER BUILDING SYSTEMS AND COMPONENTS. INSTALL ALL PIPING FREE FROM SAGS AND BENDS AND AT THE SLOPE INDICATED (WHERE REQUIRED). INSTALL PIPING AND EQUIPMENT TO PROVIDE THE MAXIMUM POSSIBLE HEADROOM.

J. ALL WORK SHALL BE PERFORMED BY CERTIFIED AND SKILLED WORKERS WITH PRIOR EXPERIENCE IN THEIR PARTICULAR TRADE.

K. THE PLUMBING SUB-CONTRACTOR SHALL PROVIDE WARRANTY THE ENTIRE PLUMBING SYSTEM FOR A PERIOD OF ONE YEAR. INCLUDE THE WARRANTY AND ALL OTHER GUARANTEES AND WARRANTIES IN THE OPERATION AND MAINTENANCE MANUAL.

L. THE CONTRACTOR SHALL REPAIR OR REPLACE ALL DAMAGED PIPING, EQUIPMENT, OR OTHER DAMAGE DURING CONSTRUCTION.

M. PROVIDE AND INSTALL ALL PLUMBING EQUIPMENT, PIPING, FIXTURE, AND ACCESSORIES IN STRICT ACCORDANCE WITH THE MANUFACTURER'S INSTALLATION INSTRUCTIONS. PROVIDE ALL FITTINGS, VALVES, TRANSITIONS, AND OTHER DEVICES AS REQUIRED FOR A COMPLETE AND OPERATIONAL PLUMBING SYSTEM.

BASIC PLUMBING MATERIALS AND METHODS

A. ALL PIPE AND PIPE FITTINGS SHALL BE NEW AND SHALL BE AMERICAN MADE WITH APPROVED LABELS. DELIVER, STORE, AND PROTECT PIPING DURING CONSTRUCTION FROM DAMAGE, DIRT, AND MOISTURE.

B. PROVIDE AND INSTALL DIELECTRIC FITTINGS AND FLEXIBLE CONNECTORS WERE REQUIRED FOR PROPER SYSTEM FLUID, PRESSURE, AND TEMPERATURE.

C. PROVIDE PIPE ESCUTCHEONS FOR ALL EXPOSED WALL AND CEILING PENETRATIONS. PROVIDE COVER PLATES FOR ALL FLOOR AND WALL CLEANOUTS.

D. SEAL ALL PIPE PENETRATIONS THROUGH WALLS AND FLOORS AIR TIGHT. CAULK ALL FIRE RATED PIPE PENETRATIONS WITH APPROVED FIRE-STOPPING MATERIAL.

E. CUT, CHANNEL, CHASE, AND DRILL FLOORS, WALLS, PARTITIONS, CEILINGS, AND OTHER SURFACES NECESSARY FOR PROPER INSTALLATION. REPAIR AS REQUIRED TO MATCH ADJACENT SURFACES.

HANGERS AND SUPPORTS

A. PROVIDE AND INSTALL PIPE SUPPORTS AND HANGERS AS REQUIRED FOR ALL PIPING AND EQUIPMENT ACCORDING TO MANUFACUTER'S STANDARDIZATION SOCIETY (MSS) STANDARDS.

VIBRATION ISOLATION AND SEISMIC CONTROLS

A. PROVIDE AND INSTALL VIBRATION ISOLATORS, FLEXIBLE CONNECTIONS, ISOLATION PADS, AND OTHER EQUIPMENT TO PREVENT NOISE AND VIBRATION TRANSMISSION.

PIPING AND EQUIPMENT IDENTIFICATION

A. PROVIDE EQUIPMENT PIPE AND EQUIPMENT TAGS, LABELS, AND IDENTIFICATION INDICATING FLOW DIRECTION, AREA SERVED, SYSTEM TYPE AND OTHER IDENDIFYING INFORMATION. COMPLY WITH ASME PIPING AND EQUIPMENT IDENTIFICATION STANDARDS.

INSULATION

A. PROVIDE AND INSTALL GLASS FIBER PREFORMED PIPE INSULATION WITH VAPOR PROOF COATING ACCORDING TO THE FOLLOWING SCHEDULE:
DOMESTIC COLD WATER PIPING:
1/2" TO 2" PIPE SIZE - 3/4" INSULATION
2" AND ABOVE - 1" INSULATION
DOMESTIC HOT WATER AND RECIRCULATED HOT WATER PIPING:
1/2" TO 2" PIPE SIZE - 1" INSULATION
2" AND ABOVE - 1-1/2" INSULATION
RAIN WATER PIPING AND PLUMBING VENTS (WITHIN 6' OF ROOF):
1/2" TO 2" PIPE SIZE - 3/4" INSULATION
2" AND ABOVE - 1" INSULATION

B. GLASS FIBER INSULATION SHALL HAVE A FLAME SPREAD RATING OF 25 OR LESS AND A SMOKE DEVELOPED RATING OF 50 OR LESS.

C. SEAL ALL ENDS AND JOINTS TO PROVIDE A COMPLETELY SEALED INSULATION SYSTEM. PROVIDE COVER HANGER INSERTS AND SHIELDS WITH JACKET MATERIAL MATCHING ADJACENT PIPE INSULATION.

E. PROVIDE SNAP ON INSULATION KIT ON ALL ADA COMPLIANT LAVATORIES AND SINKS.

PLUMBING GENERAL NOTES

1. PROVIDE ALL EQUIPMENT, PIPING, MATERIALS, LABOR, PERMITS, AND FEES TO CONSTUCT A COMPLETE AND OPERATIONAL PLUMBING SYSTEM FOR THE ENTIRE PROJECT AS SHOWN ON THE DRAWINGS.
2. COORDINATE THE EXACT LOCATION OF ALL PLUMBING FIXTURES AND DRAINS WITH THE ARCHITECTURAL DRAWINGS AND THE GENERAL CONTRACTOR.
3. COORDINATE ALL WORK WITH THE GENERAL CONTRACTOR, MECHANICAL SUB-CONTRACTOR, ELECTRICAL SUB-CONTRACTOR, AND ALL OTHER TRADES IN THE PROJECT.
4. ALL PLUMBING INFORMATION IS NOT SHOWN ON THE PLUMBING DRAWINGS. COORDINATE ALL PLUMBING WORK WITH THE ARCHITECTURAL, STRUCTURAL, MECHANICAL, CIVIL, AND ELECTRICAL DRAWINGS.
5. PLUMBING PLANS ARE SCHEMATIC IN NATURE AND THEREFORE DO NOT SHOW ALL DROPS, RISERS, AND OFFSETS. THE CONTRACTOR SHALL MAKE ALL REQUIRED MODIFICATIONS TO PROVIDE A COMPLETE AND OPERATIONAL PLUMBING SYSTEM. MAJOR MODIFICATIONS SHALL BE REVIEWED AND APPROVED BY THE ENGINEER.
6. DO NOT RUN PIPING ABOVE ELECTRICAL PANELS. PROVIDE 4'-0" DEEP X 6'6" HIGH CLEAR ACCESS SPACE IN FRONT OF PANELS. DO NOT RUN PIPING IN ELECTRICAL ROOMS.
7. INSTALL ALL PIPING SHOWN IN EXTERIOR WALLS ON THE WARM (ROOM) SIDE OF THE BUILDING INSULATION.
8. INSTALL WATER, GAS, AND VENT PIPING AS HIGH AS POSSIBLE ABOVE THE CEILING UNLESS NOTED OTHERWISE.
9. INSTALL WASTE PIPING BELOW THE FLOOR UNLESS NOTED OTHERWISE.
10. PROVIDE AND INSTALL 2" MINIMUM WASTE PIPE SIZE BELOW GRADE.
11. INSTALL EXTERIOR PIPING 48" MINIMUM BELOW GRADE.
12. INSTALL PLUMBING VENTS A MINIMUM OF 3 FEET ABOVE OR 10 FEET AWAY FROM OUTSIDE AIR INTAKES. COORDINATE WITH THE MECHANICAL SUB-CONTRACTOR.
13. PAINT ALL ROOFTOP PLUMBING VENTS, CONCENTRIC VENTS, AND FLUES TO MATCH THE ROOF COLOR.
14. WATER CLOSET FLUSH VALVE CONTROLS SHALL BE LOCATED ON THE OPEN SIDE OF THE FIXTURE.

Mortensen Engineering, Inc.
251 E South 830 East
Smithfield, Utah 84335
(435) 770-5534

LICENSED PROFESSIONAL ENGINEER
No. 11969
PLAMEN R. MORTENSEN
STATE OF UTAH

DATE
June 6, 2024

PROJECT TITLE
HOBBLED DOG CIDERY
625 West 8300 South
Paradise, Utah 84328
DWA Construction / Mansfield Architectural Services

SHEET TITLE
PLUMBING NOTES & SPECIFICATIONS

PROJECT NUMBER

REVISIONS

SHEET NUMBER
P001

REFERENCE NOTES

1. SEE SITE UTILITIES PLAN FOR CONTINUATION.
2. EXTEND GAS LINE TO PROPANE TANKS.
3. BUILDING GAS SHUT-OFF VALVE.
4. PIPING UP TO MEZZANINE. SEE SHEET P102 FOR CONTINUATION.
5. MEZZANINE ACCESS LADDER.
6. CHLORINE INJECTOR SYSTEM (IF REQUIRED).
7. PROVIDE CONNECTIONS FOR DISHWASHER.

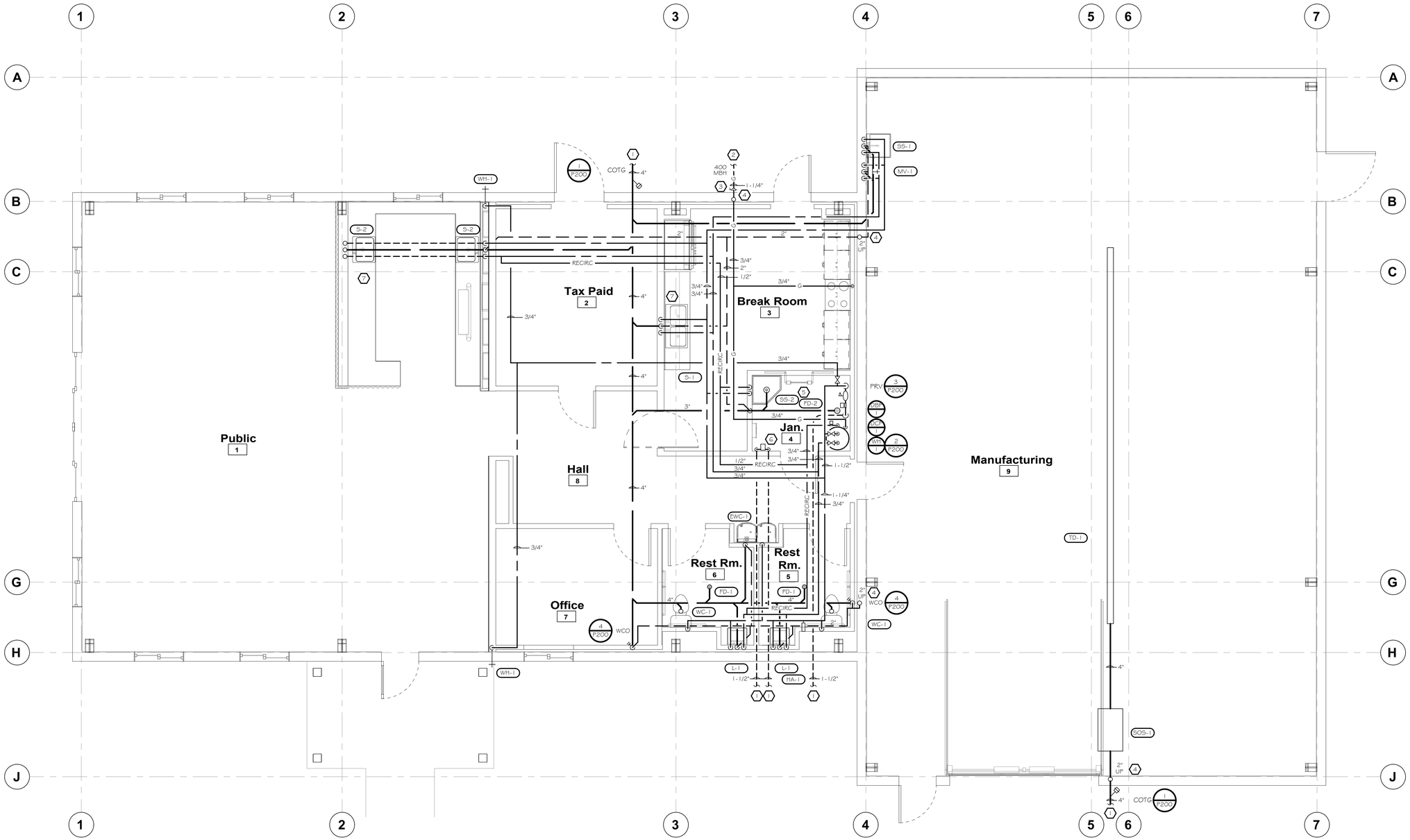

MAIN FLOOR MECHANICAL PLAN
SCALE: 1/4" = 1' - 0"

Mortensen Engineering, Inc.
251 E. South 830 East
Smithfield, Utah 84335
(435) 770-5534

LICENSED PROFESSIONAL ENGINEER
No. 11969
JEFFREY R. MORTENSEN
STATE OF UTAH

DATE
June 6, 2024

PROJECT TITLE
HOBBLED DOG CIDERY
625 West 8300 South
Paradise, Utah 84328
DWA Construction / Mansfield Architectural Services

SHEET TITLE
MAIN FLOOR MECHANICAL PLAN

PROJECT NUMBER

REVISIONS

SHEET NUMBER
P101

REFERENCE NOTES

1. EQUIPMENT SERVICE AREA. KEEP CLEAR OF DUCTS AND PIPES.
2. KEEP DUCTS AND PIPING HIGH IN MEZZANINE SPACE FOR CLEAR ACCESS.
3. PIPING DOWN TO MAIN FLOOR. SEE SHEET P101 FOR CONTINUATION.
4. MEZZANINE MECHANICAL ROOM ACCESS DOOR.
5. PLUMBING VENT OUT SIDE WALL ABOVE ADJACENT ROOF.

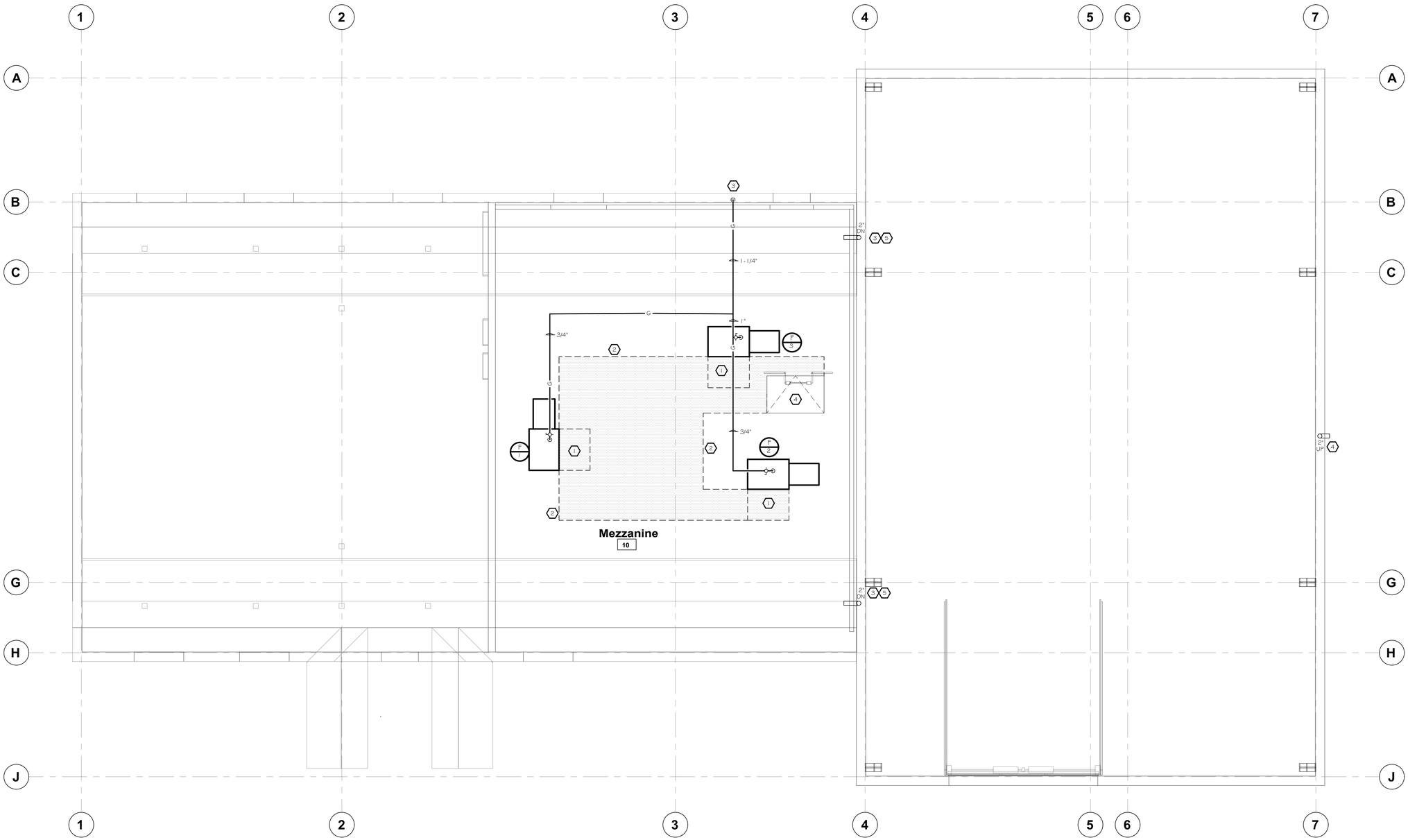

MEZZANINE PLUMBING PLAN
SCALE: 1/4" = 1' - 0"

Mortensen Engineering, Inc.
251 South 830 East
Smithfield, Utah 84335
(435) 770-5534

LICENSED PROFESSIONAL ENGINEER
No. 11969
JEFFREY R. MORTENSEN
STATE OF UTAH

DATE
June 6, 2024

PROJECT TITLE
HOBBLED DOG CIDERY
625 West 8300 South
Paradise, Utah 84328
DWA Construction / Mansfield Architectural Services

SHEET TITLE
MEZZANINE
PLUMBING PLAN

PROJECT NUMBER

REVISIONS

SHEET NUMBER
P102

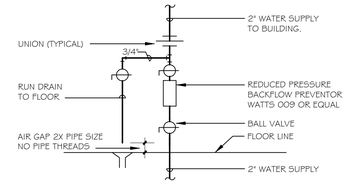

VERTICAL WATER PRESSURE REDUCING STATION DETAIL (3 / P200)

NOT TO SCALE

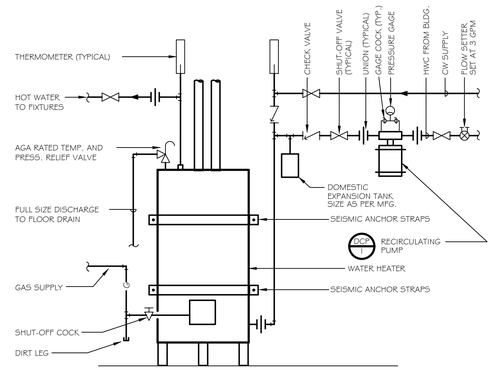

WATER HEATER DETAIL (2 / P200)

NOT TO SCALE

PLUMBING FIXTURE SCHEDULE

FIX. NO.	FIXTURE	TYPE	DESCRIPTION	WASTE	TRAP	VENT	HW	CW
EWC-1	ACCESSIBLE ELECTRIC WATER COOLER	ACCESSIBLE BARRIER-FREE	ACORN AQUA A112108P WALL MOUNTED BARRIER FREE BI-LEVEL WATER COOLER WITH ONE-PIECE STAINLESS STEEL TOP AND RECEPTOR, WELDED STEEL FRAME, AND STEEL PANELS WITH BAKED ENAMEL COATING. 1/4 HP, 115/1/60, BF2 SENSOR BOTTLE FILLER W/O FILTER, 8 GPH OF 50 ° F WATER AT 80° F INLET WATER.	1 1/2"	1 1/4"	1 1/4"	-	1/2"
FD-1	FLOOR DRAIN	TOILET ROOMS	SMITH FIGURE 2010-BP CAST IRON BODY AND FLASHING COLLAR WITH PROTECTIVE CAP AND ROUND NICKEL BRONZE ADJUSTABLE STRAINER HEAD WITH SECURED SQUARE HOLE GRATE. DEEP SEAL TRAP. TRAP PRIMER CONNECTION.	2"	2"	1 1/2"	-	-
FD-2	FLOOR DRAIN	CUSTODIAL MECHANICAL	SMITH FIGURE 2010-AP CAST IRON BODY AND FLASHING COLLAR WITH PROTECTIVE CAP AND ROUND NICKEL BRONZE ADJUSTABLE STRAINER HEAD WITH SECURED SQUARE HOLE GRATE. DEEP SEAL TRAP.	3"	3"	1 1/2"	-	-
HA-1	WATER HAMMER ARRESTOR	INLINE	JAY R. SMITH HYDROTROL WATER HAMMER ARRESTOR MODEL 5020, PDI SYMBOL 'C'. 1" THREADED NIPPLE, STAINLESS STEEL CONSTRUCTION, EXPANSION BELLOW TYPE.	-	-	-	-	1"
L-1	ACCESSIBLE LAVATORY	ACCESSIBLE WALL HUNG RECTANGULAR	SLOAN SS-3003 VITREOUS WALL HUNG LAVATORY SYSTEM WITH SLOAN EBF-650 FAUCET AND SFP-6 PLUG-IN ADAPTER AND BDT BELOW DECK THERMOSTATIC MIXING VALVE. BATTERY POWERED SENSOR ACTIVATED 4" CENTERSET ELECTRONIC HAND WASHING FAUCET.	1 1/2"	1 1/4"	1 1/4"	1/2"	1/2"
MV-1	MIXING VALVE	WALL MOUNTED	CHICAGO 897-CP WALL MOUNTED FAUCET WITH VACUUM BREAKER, PAIL HOOK, WALL BRACE, 369 HANDLES, 3/4" MALE MALE HOSE OUTLET, & WALL HOOK. (1)			1 1/2"	1/2"	1/2"
S-1	BREAK ROOM SINK	TWO COMPARTMENT SINK	DAYTON DSEW-3321 GAUGE #300 STAINLESS STEEL COUNTERTOP SELF RIMMING SINK. DIMENSIONS: 33"x 21"x 8" WITH (2) FAUCET HOLES ON 4" CENTERS, STRAINER; CLEVELAND CFG FLAGSTONE MODEL 47511 SINGLE HANDLE FAUCET WITH 8" SWING SPOUT, & E3 AERATOR. (1)	2"	1 1/2"	1 1/2"	1/2"	1/2"
S-2	TWO COMPARTMENT SINK	TWO COMPARTMENT SINK	KOHLER K-3839-4-NA SMART DIVIDE 33" UNDERMOUNT DOUBLE BOWL 18 GAUGE STAINLESS STEEL SINK. KOHLER GRAZE K-22062 PULL DOWN SINK FAUCET WITH THREE FUNCTION SPRAYHEAD. SINGLE HOLE SINK WITH SWING SPOUT AND AERATOR. (1)	2"	1 1/2"	1 1/2"	1/2"	1/2"
SS-1	SERVICE SINK	WALL MOUNTED SERVICE SINK	FIAT SERVICE SINK BASIN MODEL MS3624 (36"X24"X10") AND MODEL 830AA SERVICE SINK FAUCET WITH VACUUM BREAKER, PAIL HOOK, WALL BRACE, 3/4" MALE HOSE OUTLET, AND WALL HOOK. SERVICE SINK CONSTRUCTED OF SHEET MOLDING COMPOUND. NO SOAP OR CHEMICAL SYSTEM CONNECTION.	3"	3"	1 1/2"	1/2"	1/2"
SS-2	SERVICE SINK	FLOOR MOUNTED SERVICE SINK	CHICAGO MODEL 897-CP WALL MOUNTED FAUCET AND 24"X36"X10" MOLDED STONE BASIN WITH STAINLESS STEEL STRAINER AND WALL GUARD, HOSE, AND MOP HANGER.	3"	3"	1 1/2"	1/2"	1/2"
SOS-1	SAND/OIL SEPARATOR	EXTERIOR TYPE	JAY R. SMITH SAND/OIL SEPARATOR NO 8925-200, 200 LBS MAX. FABRICATED STEEL CATCH BASIN WITH GRAY DUCO COATED INSIDE AND OUTSIDE. PROVIDE HEAVY DUTY CAST IRON GRATING.	4"	-	2"	-	-
TD-1	TRENCH DRAIN	TRENCH DRAIN	POLYDRAIN PRECAST POLYMER CONCRETE TRENCH DRAIN SYSTEM WITH TOP WIDTH OF 6" AND REINFORCED 1/4" GALVANIZED STEEL FIBERGLASS GRATE. TRENCH DRAIN SYSTEM SHALL BE COMPRISED OF INTERLOCKING PRE-SLOPED DRAIN SECTIONS WITH MIN. SLOPE OF 0.6%. PROVIDE LENGTHS AS SHOWN ON DRAWINGS.	4"	4"	2"	-	-
WC-1	WATER CLOSET	ACCESSIBLE FLOOR MOUNTED TANK TYPE	KOHLER K-3481 WELLWORTH COMFORT HEIGHT VITREOUS CHINA INGENIUM FLUSHING SYSTEM. COMFORT HT. BOLT CAPS; PLASTIC OPEN FRONT SEAT; 12" ROUGHING-IN. ACTUATOR SHALL BE ON THE WIDE SIDE OF STALL. 1.6 GAL./ FLUSH MAX.	3"	-	1 1/2"	-	1/2"
WH-1	WALL HYDRANT	WALL MOUNTED	CHICAGO NONFREEZE AUTOMATIC DRAINING, ANTIBACKFLOW TYPE, KEY OPERATION WITH 3/4" HOSE CONNECTION.	-	-	-	-	3/4"

(1) PROVIDE SYMMONS THERMIXER MODEL 5-120 THERMOSTATIC MIXING VALVE BELOW LAVATORIES AND SINK. SET OUTLET AT 110° F. CONNECT TO HOT WATER INLET OF FAUCET.

GAS FIRED DOMESTIC HOT WATER HEATER SCHEDULE

SYMBOL	MANUFACTURERS AND MODEL NO.	TANK CAPACITY GALLONS	FUEL TYPE	INPUT BTUH (1)	AMP	VOLTS/ PHASE/ CYCLE	RECOVERY RATE @ 90° F RISE GPH	WATER TEMP IN/OUT	STACK/ INTAKE SIZE	COMMENTS
WH1 / 1	A.O. SMITH BPD-80	75	PROPANE	76,000	3	120/1/60	82	50/140	3"Ø	

DOMESTIC WATER CIRCULATE PUMP SCHEDULE

PUMP NO.	MANUFACTURER AND MODEL NO.	GPM	HEAD FT.	H.P.	RPM	VOLTS/PHASE/ CYCLE	EQUIPMENT OR AREA SERVED	COMMENTS
DRP / 1	DAR E.SYBOX	32	213	2.11	1750	120/1/60	ALL ROOMS & FIXTURES	

DOMESTIC WATER CIRCULATE PUMP SCHEDULE

PUMP NO.	MANUFACTURER AND MODEL NO.	GPM	HEAD FT.	H.P.	RPM	VOLTS/PHASE/ CYCLE	EQUIPMENT OR AREA SERVED	COMMENTS
DCP / 1	BELL & GOSSETT SERIES PR6	1	-	1/4	1750	120/1/60	ALL ROOMS & FIXTURES	(1) (2)

(1) ALL BRONZE CONSTRUCTION.
(2) EQUIPPED WITH 24 HOUR, 7 DAY PROGRAMMABLE TIMER.

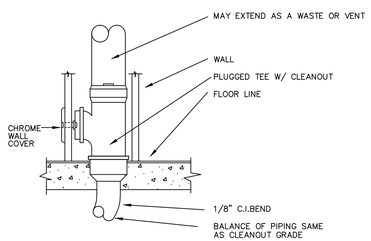

WALL CLEANOUT DETAIL (4 / P200)

NOT TO SCALE

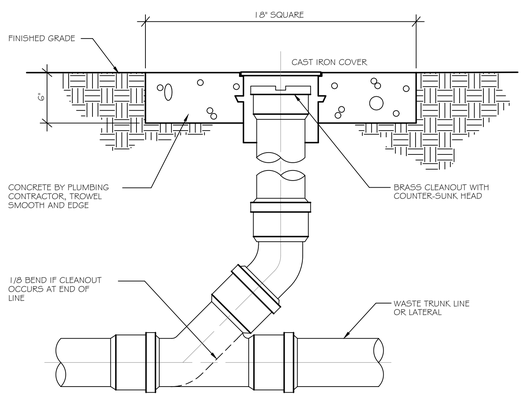

CLEAN OUT TO GRADE DETAIL (1 / P200)

NOT TO SCALE

Mortensen Engineering, Inc.
251 South 800 East
Smithfield, Utah 84335
(435) 770-5534

LICENSED PROFESSIONAL ENGINEER
No. 11969
JEFFREY R. MORTENSEN
STATE OF UTAH

DATE
June 6, 2024

PROJECT TITLE
HOBBLED DOG CIDERY
625 West 8300 South
Paradise, Utah 84328
DWA Construction / Mansfield Architectural Services

SHEET TITLE
PLUMBING DETAILS & SCHEDULES

PROJECT NUMBER

REVISIONS

SHEET NUMBER
P200

STRUCTURAL SPECIFICATIONS

BASIS OF DESIGN

1. GOVERNING BUILDING CODE: 2021 IBC

2. GRAVITY LOADING
   A. GENERAL ROOF... 40 PSF SNOW LOAD (ROOF)
      20 PSF DEAD LOAD
   B. FLOOR.... 50 PSF LIVE LOAD (OFFICE)
      50 PSF LIVE LOAD (MEZZANINE)
      125 PSF LIVE LOAD (LIGHT MANUFACTURING)

3. EARTHQUAKE
   A. SEISMIC USE GROUP 1
   B. SEISMIC DESIGN CATEGORY D
   C. SITE CLASS D
   D. SEISMIC FORCE RESISTING SYSTEM: LIGHT FRAMED WOOD WALLS R=6.5
   E. ANALYSIS PROCEDURE: SIMPLIFIED BASE SHEAR
   F. S(S)=0.977 / S(1)=0.312
   G. BASE SHEAR = 37k

4. WIND
   A. VELOCITY = 115 MPH (3-SEC GUST)
   B. EXPOSURE = C
   C. Iw = 1.0

5. FOOTING AND FOUNDATION

   A. ALLOWABLE SOIL BEARING PRESSURE. 2000 PSF.
   B. FROST DEPTH =30"
   C. SEE FOUNDATION REPORT FOR HOBBLED DOG CIDERY BY GSH GEOTECHNICAL DATED MAY 26, 2023

6. FLOOD DESIGN DATA: NOT LOCATED IN A FLOOD HAZARD AREA.

7. RAIN LOAD DATA: RAIN INTENSITY: 1.58 in/hr (100 year storm)

MISCELLANEOUS

1. ELEVATIONS REFERENCE MAIN FLOOR ELEVATION 100'-0 = (SEE SITE PLAN) ABOVE SEA LEVEL.
2. COORDINATE OPENINGS AND EMBEDDED ITEMS NOTED ON ALL CONSTRUCTION DOCUMENTS WITH APPROPRIATE TRADES.
3. BEFORE FABRICATION, HAVE SHOP DRAWINGS REVIEWED BY ARCHITECT AND/OR ENGINEER.
4. TEMPORARILY BRACE THE STRUCTURE TO RESIST ALL LOADS OR COMBINATIONS OF LOADS UNTIL ALL PERMANENT ELEMENTS ARE IN PLACE AND ALL CONNECTIONS ARE COMPLETE.

H. ABBREVIATIONS LIST – THIS IS A STANDARD LIST. SOME OF THE LISTED ABBREVIATIONS MAY NOT APPEAR IN THE DRAWINGS FOR THIS PROJECT.

ADH ADHESIVE
ANC ANCHOR
ARCH ARCHITECTURE
ALT ALTERNATE
BLDG BUILDING
BM BEAM
BOT BOTTOM
BRG BEARING
BTWN BETWEEN
CL CENTERLINE
CLR CLEAR
CMU CONCRETE MASONRY UNIT
COL COLUMN
CONC CONCRETE
CONN CONNECTION/CONNECTOR
CONSTR JT CONSTRUCTION JOINT
CONT CONTINUE/CONTINUOUS
CONTR JT CONTRACTION JOINT
DBA DEFORMED BAR ANCHOR
DBL DOUBLE
EA EACH
ELE ELEVATION
EW EACH WAY
EXIST EXISTING
EXP EXPANSION
FDN FOUNDATION
FTG FOOTING
GLB GLULAM BEAM
HCA HEADED CONCRETE ANCHOR
HDR HEADER
HORZ HORIZONTAL
ISOL JT ISOLATION JOINT
LONG LONGITUDINAL
LSL LAMINATED STRAND LUMBER
LVL LAMINATED VENEER LUMBER
NFS NON-FROST SUSCEPTIBLE
NIC NOT IN CONTRACT
OC ON CENTER
OSB ORIENTED STRAND BOARD
PAR PARALLEL
PERP PERPENDICULAR
PSL PARALLEL STRAND LUMBER
PT PRESSURE TREATED
REINF REINFORCEMENT/REINFORCING
REQ REQUIRED
SPA SPACE/SPACES
SPA SPACE/SPACES
STD STANDARD
STIFF STIFFENER
T&G TONGUE AND GROOVE
TOC TOP OF CONCRETE
TOS TOP OF STEEL BEAM
TRANS TRANSVERSE
VERT VERTICAL
W/ WITHR
W/O WITHOUT

CONCRETE AND REINFORCING

1. ALL CONCRETE SHALL HAVE A 28 DAY COMPRESSIVE STRESS AS FOLLOWS:
   A. FOOTING AND FOUNDATIONS... 3000 PSI
   B. INTERIOR AND EXTERIOR SLABS... 4000 PSI

2. CONCRETE SHALL CONTAIN ENTRAINED AIR (6% +/- 1.5%) FOR EXTERIOR SLABS AND FOOTINGS.

3. PROTECT CONCRETE IN HOT WEATHER AS PER ACI 306 AND COLD WEATHER AS PER ACI 305.

4. SLABS: LARGE AREAS OF SLAB ON GRADE SHALL BE PLACED IN CHECKERBOARD FASHION AND SIZE SHALL NOT EXCEED 30 FEET IN ANY DIRECTION. CONSTRUCTION JOINTS NOT SHOWN ON THE PLANS SHALL BE MADE IN SUCH A WAY THAT THE APPEARANCE AND STRENGTH OF THE SLAB IS NOT IMPAIRED. JOINTS IN THE SLABS MAY BE TOOL-MADE, SAW-CUT, OR ZIP-STRIP TYPES. JOINTS SHALL BE EVENLY SPACED, NOT FURTHER APART THAN 12 FEET FOR 4" SLABS, AND 15 FEET FOR 5 AND 6" SLABS.

5. SLABS ON GRADE: REINFORCING STEEL SHALL BE ADEQUATELY SUPPORTED ON PRECAST CONCRETE UNITS, TO KEEP THE REINFORCING THE MINIMUM HEIGHT SPECIFIED ABOVE THE GRADE. LIFTING THE REINFORCING OFF THE GRADE DURING PLACEMENT OF THE CONCRETE WILL NOT BE PERMITTED. CRACK CONTROL BARS (2#4 X 5' LONG, TYPICALLY) SHALL BE PLACED IN THE SLAB AT ANY INTRUSION OR OPENING WHICH MAY ENCOURAGE CRACKING. 6 MIL VAPOR BARRIER IS DESIRABLE UNDER THE INTERIOR FLOOR SLABS.

6. ALL SLEEVES NOT SPECIFICALLY SHOWN ON THE DRAWING SHALL BE LOCATED BY THE TRADES INVOLVED AND SHALL BE APPROVED BY THE ARCHITECT.

7. ALL CONCRETE SHALL BE PROPERLY VIBRATED IN PLACE.

8. FORMS: FORMS OR SHORING SHALL NOT BE REMOVED UNTIL CONCRETE HAS ACQUIRED SUFFICIENT STRENGTH TO SUPPORT SAFELY ITS OWN WEIGHT AND ANY LOAD TO WHICH IT MAY BE SUBJECTED BUT IN NO CASE SHALL THEY BE REMOVED SOONER THAN 24 HOURS AFTER THE CONCRETE IS PLACED.

9. REINFORCING SHALL HAVE A MINIMUM CONCRETE COVERAGE AS FOLLOWS:
   A. CAST AGAINST AND PERMANENTLY EXPOSED TO THE EARTH... 3"
   B. EXPOSED TO EARTH OR WEATHER
      6# AND LARGER... 2"
      5# AND SMALLER... 1-1/2"
   C. NOT EXPOSED TO EARTH OR WEATHER
      SLABS, JOISTS, WALLS, #11 AND SMALLER... 3/4"
      COLUMNS, BEAMS: MAIN REINFORCING OR TIES... 1-1/2"
   D. SLABS ON GRADE
      PLACE REINFORCING AT THE CENTER OF SLAB.

10. UNLESS OTHERWISE NOTED ON THE DRAWINGS, WALL REINFORCING SHALL BE AS FOLLOWS:

WALL THICKNESS	HORIZONTAL REINF	VERTICAL REINF.
8"	#4 @ 12" c.c.	#4 @ 16" c.c.

REINFORCING SHALL BE PLACED AT THE CENTER OF THE WALLS. (EXCEPT FOR WALLS THICKER THAN 10" AND WHERE SHOWN OTHERWISE.) WALLS THICKER THAN 10" SHALL HAVE TWO CURTAINS OF REINFORCING PLACED NEAR EACH FACE OF THE WALL.

11. ALL REINFORCING STEEL SHALL BE OF NEW STOCK DEFORMED BARS CONFORMING TO ASTM A-615 GRADE 60 UNLESS OTHERWISE NOTED.

12. PLACEMENT OF REINFORCING SHALL BE IN ACCORDANCE WITH ACI 315 AND ACI 318.

13. UNLESS OTHERWISE NOTED ALL REINFORCING SHOWN CONTINUOUS SHALL BE LAPPED 48 BAR DIAMETERS. ALL REBAR SPLICES SHALL BE MADE AWAY FROM LOCATIONS OF MAXIMUM STRESS.

14. ALL VERTICAL REINFORCING SHALL BE DOWELED TO FOOTINGS OR TO THE STRUCTURE BELOW. DOWELS SHALL BE THE SAME SIZE AND AT THE SAME SPACING AS THE VERTICAL SPACING AS THE VERTICAL REINFORCING SCHEDULED FOR THE ELEMENT ABOVE. LAP SPLICE LENGTHS SHALL BE AS NOTED ABOVE OR AS SHOWN ON THE DRAWINGS. DOWELS ENDING INTO THE FOOTINGS SHALL TERMINATE WITH A STANDARD 90 DEGREE ACI HOOK AND SHALL EXTEND TO WITHIN 4" OF THE BOTTOM OF THE FOOTING.

15. FIELD BENDING: REINFORCING STEEL SHALL NOT BE BENT OR STRAIGHTENED IN A MANNER WHICH WILL BE INJURIOUS TO THE CONCRETE OR REINFORCING STEEL.

16. DO NOT WELD REINFORCING UNLESS NOTED ON THE PLANS. WHERE WELDING REINFORCING IS CALLED OUT ON THE PLAN, USE ASTM A-706 REINFORCING BARS OR REFER TO UBC STANDARD 19-2.

17. ALL DOWELS FROM FOOTINGS SHALL HAVE AT LEAST 48 BAR DIAMETER EMBEDMENT INTO THE WALL IT IS SUPPORTING.

18. PROVIDE CORNER BARS AT ALL INTERSECTING CORNERS. USE SAME SIZE BAR AND SPACING AS HORIZONTAL WALL REINFORCING.

19. ADD 2 - #5 BARS AROUND ALL OPENINGS (UNLESS OTHERWISE NOTED) AND EXTEND 24" BEYOND CORNER OF OPENINGS.

20. PROVIDE 2 #5 X 4'-0" DIAGONAL BARS AT THE CORNER OF ALL OPENINGS. DIAGONAL BARS SHALL BE CENTERED ON THE CORNER OF THE OPENING.

21. GROUT UNDER STEEL BASE PLATES SHALL BE NON-SHRINK NON METALLIC WITH A COMPRESSIVE STRENGTH (f'c) OF 4000 PSI AT 28 DAYS. GROUT SHALL BE INSTALLED AS PER MANUFACTURERS RECOMMENDATIONS.

WOOD

W1. UNLESS OTHERWISE NOTED ALL STRUCTURAL LUMBER (HEADERS, STUDS, AND BLOCKING ETC.) TO BE DOUGLAS FIR NO. 2.

W2. UNLESS OTHERWISE NOTED ALL NAILING OF FRAMED LUMBER SHALL BE AS PER 2021 INTERNATIONAL BUILDING CODE TABLE 2304.9.1

W3. ALL MICROLLAM BEAMS SHALL HAVE A MODULUS OF ELASTICITY OF 2.0E WITH AN Fb = 2600 PSI

W4. ALL BOLTS IN WOOD SHALL HAVE A WASHER BETWEEN WOOD AND NUT OR BOLT HEAD.

W5. UNLESS OTHERWISE NOTED ALL PLYWOOD DIAPHRAGMS AT WALLS, ROOFS AND FLOORS SHALL BE APA RATED EXTERIOR SHEATHING AND AS FOLLOWS: WALL SHEATHING 7/16" THICK (PI=24/0). ALL PLYWOOD EDGES MUST BE BLOCKED WITH A MINIMUM OF 2 X 4 BLOCKING SHEATHING TO EXTEND FROM FLOOR TO ROOF. WALL NAILING (UNLESS OTHERWISE NOTED ON DRAWINGS) NAIL WITH 0.131ø P-NAIL WITH MINIMUM EMBEDMENT OF 1-3/8" INCHES @ AT 4" o/c AT ALL PANEL EDGES AND 0.131ø P-NAIL WITH MINIMUM EMBEDMENT OF 1-3/8" INCHES @ 12" o/c AT ALL OTHER INTERMEDIATE FRAMING.
ROOF SHEATHING, 7/16" THICK (PI=24/0) SEE PLAN. ROOF NAILING (UNLESS OTHERWISE NOTED ON DRAWINGS) WITH 8d NAILS AT 6" O.C. AT PANEL EDGES AND DIAPHRAM BOUNDARY. USE 8d NAILS AT 12 O.C. AT ALL OTHER INTERMEDIATE FRAMING.
FLOOR SHEATHING, 7/8" THICK (PI=48/24) APA RATED SHEATHING. FLOOR NAILING (UNLESS OTHERWISE NOTED ON DRAWINGS) WITH 10d NAILS AT 6" O.C. AT PANEL EDGES AND DIAPHRAM BOUNDARY. USE 10d NAILS AT 12 O.C. AT ALL OTHER INTERMEDIATE FRAMING.

(P-NAILS REFERS TO NAILS DRIVEN WITH PNEUMATIC OR MECHANICAL DEVICES.)

W6. PLYWOOD SHEATHING ORIENTATION: PLACE FACE GRAIN PERPENDICULAR TO ROF JOISTS AND STUDS. STAGGER 4 FOOT SIDE JOINTS. BLOCK ALL PLYWOOD PANEL EDGES WITH 2 X 4 MINIMUM FLAT.

W7. OPENINGS: DOUBLE HEADER AND TRIMMER JOISTS SHALL BE PROVIDED AT OPENINGS WHERE JOISTS ARE CUT. JOIST HANGERS SHALL BE USED WHERE JOISTS FRAM INTO HEADERS OR WHERE HEADERS FRAME INTO TRIMMERS.

W8. PARTITIONS: JOISTS SHALL BE DOUBLED UNDER PARTITIONS PARALLEL WITH JOISTS.

W9. TOP PLATES: ALL WALLS HAVE A MINIMUM OF TWO TOP PLATES. TOP PLATES SHALL BE SPLICED BY OFFSETTING JOINTS IN THE PLATES A MINIMUM OF 4'-6" FEET AND NAILING THE LAPPED PLATES WITH 11-16d NAILS

W10. ALL MEMBERS FRAMING INTO THE SIDE OF HEADER OR STUD SHALL BE ATTACHED USING METAL JOIST HANGERS.

W11. PROVIDE SOLID BLOCKING BETWEEN TRUSSES AT ALL BEARING LOCATIONS.

W12. PREFABRICATED WOOD PRODUCTS SHALL BE INSTALLED AS PER MANUFACTURES RECOMMENDATIONS. ALL PREFABRICATED WOOD JOISTS SHALL BEAR ON THE CENTER OF THE BEARING WALL. ALL PREFABRICATED WOOD PRODUCTS SHALL BE ICBO CERTIFIED.

W13. ALL WOOD STUDS AT EXTERIOR WALLS, BEARING WALLS & INTERIOR SHEAR WALLS SHALL BE CONTINUOUS FROM FLOOR TO ROOF PLYWOOD.
(DO NOT PUT A WALL ON TOP OF A WALL).

W14. ALL GLUE LAMINATED BEAMS SHALL BE DOUGLAS FIR (24F-V4 DF/DF). 1.8E MEMBERS SHALL MEET AITC SPECIFICATIONS.

W15. ALL SIMPSON HANGERS STRAPS ETC. SHALL BE INSTALLED AS PER MANUFACTURERS RECOMMENDATIONS.

W16. TRUSS MANUFACTURER SHALL SUBMIT TRUSS ERECTION AND SHOP DRAWINGS FOR REVIEW BY ENGINEER PRIOR TO FABRICATION. SHOP DRAWINGS SHALL INCLUDE TRUSS GEOMETRY, PLAN SHOWING JOIST LOCATIONS, DIMENSIONS, MEMBER SIZES, STRESSES, REACTIONS, GRADE OF LUMBER USED.

W17. ALL NAILS TO BE COMMON NAILS. FASTENERS OTHER THAN NAILS ARE NOT PERMITTED WITHOUT PRIOR APPROVAL FROM ENGINEER, AND WHERE USED MUST FURNISH STRENGTH EQUAL TO THAT OF THE SPECIFIED NAILING.

W18. INSTALL SIMPSON H1 HOLDDOWN EVERY TRUSS UNLESS NOTED OTHERWISE.

W19. PROVIDE SOLID BLOCKING IN FLOORS TO TRANSFER COLUMN POINT LOADS THROUGH FOR (1-3/4x1-1/2",11-7/8", AND 14" LVL'S) TO MATCH FLOOR SYSTEM.

W20. PROVIDE TRIMMERS/STUDS UNDER BEARING ENDS OF GIRDER TRUSSES & BEAMS EQUIVALENT TO THE WIDTH OF THE MEMBER SUPPORTED, OR AS SPECIFIED ON FRAMING PLANS.

W21. ALL FASTENERS (I.E. NAILS, SCREWS, ANCHOR BOLTS, ETC.) TO BE INSTALLED IN PRESERVATIVE TREATED WOOD (I.E. SILL PLATES) SHALL MEET THE REQUIREMENTS OF IBC 2304.9.5.

SPECIAL INSPECTIONS AS REQUIRED BY IBC SECTION 1704

1. Special inspections and structural testing shall be provided by an independent agency employed by the Owner for the items identified in this section and in other areas of the approved construction plans and specifications, unless waived by the Building Official (see IBC Chapter 17).
2. The names and credentials of the Special Inspectors to be used shall be submitted to the Building Official for approval.
3. Duties of the Special Inspector:
   a. The Special Inspector shall review all work listed below for conformance with the approved construction plans and specifications and the 2021 IBC.
   b. The Special Inspector shall furnish special inspection reports to the EOR, Contractor, Owner and Building Official on a weekly basis, or more frequently as required by the Building Official. All items not in compliance shall be brought to the immediate attention of the Contractor for correction, and if uncorrected, to the EOR and the Building Official.
   c. Once corrections have been made by the Contractor, the Special Inspector shall submit a final signed report to the Building Official stating that the work requiring special inspection was, to the best of the Special Inspector's knowledge, in conformance with the approved construction plans and specifications as well as the applicable workmanship provisions of the 2021 IBC.
4. Duties and responsibilities of the Contractor:
   a. The Contractor shall submit a written statement of responsibility to the Owner and the Building Official prior to the commencement of work. In accordance with IBC 1704.4, the statement of responsibility shall contain acknowledgement of the special inspection requirements contained within this "Statement of Special Inspections".
   b. The Contractor shall notify the responsible Special Inspector that work is ready for inspection at least one working day (24 hours minimum) before such inspection is required.
   c. All work requiring special inspection shall remain accessible and exposed until it has been observed by the Special Inspector.
5. Please see the "Special Inspection Schedule" for the types, extents and frequency of specific items requiring special inspections and structural tests as part of this project.

SPECIAL INSPECTION SCHEDULE

ITEMS REQUIRING SPECIAL INSPECTION	CONTINUOUS	PERIODIC	COMMENTS
FABRICATORS (IBC 1704.2.5)			
	X		If fabricator is approved, on-site inspection is not required but a certificate of completion must be provided to the B.O. (IBC 1704.2.5.2)
SOILS (IBC 1705.6)			
Verify adequate materials below footings		X	Prior to placement of concrete.
Excavation extend to proper depth and materials		X	Prior to placement of compacted fill or concrete.
Classification and testing of fill materials		X	Check classification and gradations at each lift, but not less than once for each 10,000ft² of surface area.
Verify proper fill materials, lift thicknesses and in-place densities	X		
Verify properly prepared site and subgrade		X	Prior to placement of concrete.
CONCRETE CONSTRUCTION (IBC 1705.3)			
Reinforcing steel placement		X	Verify size, clearances, splices and proper ties.
Embedded bolts or plates	X		
Verify required design mix		X	Verify mix design meets strength and exposure requirements listed on approved plans.
Concrete placement/sampling	X		Includes sampling for air, slump, strength and temperature techniques
Inspect formwork		X	Verify shape, location and member dimensions.
Post-installed anchors	X		In accordance with approved ICC-ES Report. Periodic inspections allowed if stated in ES Report

SEAL
REGISTERED PROFESSIONAL ENGINEER
BID SET
NO. 275617
BRIAN G. LYON
6/18/24
STATE OF UTAH

ALLIANCE CONSULTING ENGINEERS
150 EAST 200 NORTH SUITE P
LOGAN, UTAH 84321
(435)755-5121
allianceloga@yahoo.com

No.	REVISIONS/ SUBMISSIONS	DATE

REVIEWED : DRAWN :
CAD FILE : PROJECT NO. :

PROJECT TITLE
HOBBLE DOG
PARADISE, UTAH

DRAWING TITLE
STRUCTURAL SPECIFICATIONS

DATE : JUNE 2024
DRAWING No. S0.1

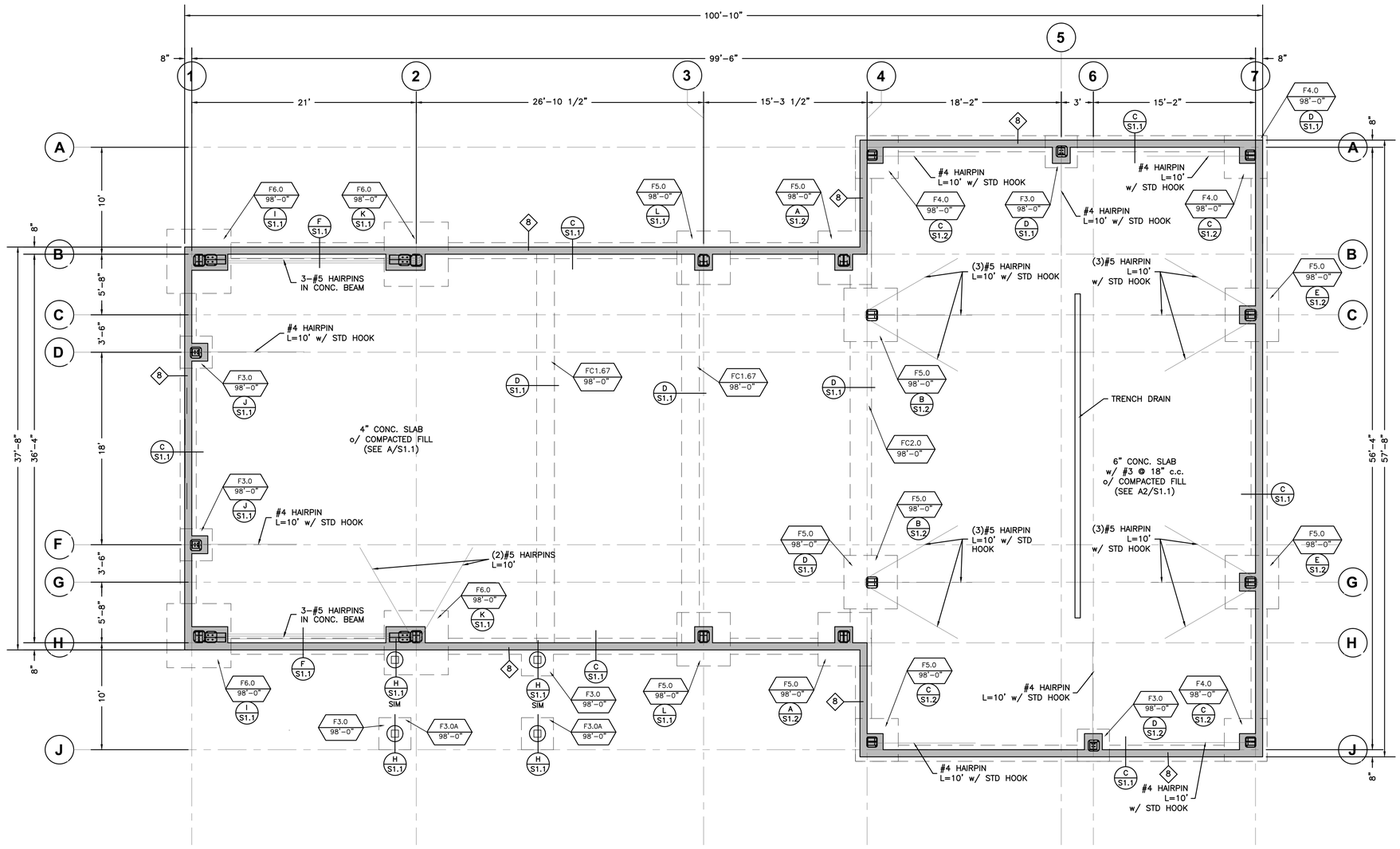

FOOTING/FOUNDATION PLAN
SCALE: 3/16"=1'

A
S1.0

FOOTING/FOUNDATION PLAN NOTES

1. FOOTINGS ARE TO BE CENTERED UNDER WALLS & COLUMNS UNLESS NOTED OTHERWISE.
2. FOOTING AND FOUNDATIONS ARE TO BE PLACED ON NATIVE UNDISTURED SOILS OR COMPACTED FILL.
3. EXTERIOR FOOTINGS ARE TO BE PLACED 30" MIN. BELOW FINISHED GRADE FOR FROST PROTECTION.
4. SEE STEEL BUILDING ANCHOR BOLT PLAN FOR BOLT PLACEMENT, NUMBER AND DIAMETER.
5. ALL STEEL BUILDING COLUMNS SHALL HAVE ANCHOR BOLTS WITH A MIN. EMBEDMENT OF 12" c.c. AND A F1554 GRADE 55 J-BOLT UNLESS NOTED OTHERWISE.
6. THE SLAB ON GRADE IS DESIGNED AS A STRUCTURAL DIAPHRAGM. SPECIAL INSPECTION IS REQUIRED ON THE SLAB ON GRADE.
7. FOOTINGS WERE NOT DESIGNED WITH ANCHOR BOLT PLANS AND REACTIONS FROM THE STEEL BUILDING MANUFACTURER. CONTRACTOR TO SUPPLY STRUCTURAL ENGINEER WITH STEEL BUILDING PLANS PRIOR TO CONSTRUCTION FOR ANY REVISIONS REQUIRED.

CONCRETE WALL SCHEDULE

MARK	THICK	MATERIALS		REINFORCING		SPECIAL INSPECTION
				VERTICAL	HORIZONTAL	
8	8"	CONCRETE		#5 @ 16" c.c.	#4 @ 12" c.c.	NO

LAP SPLICE SCHEDULE

LOCATION	#3	#4	#5	#6	#7	#8
CONCRETE						
FOUNDATION WALL REINFORCEMENT	–	18"	22"	27"		
FOOTING REINFORCEMENT	–	18"	22"	27"		
SLAB ON GRADE REINFORCEMENT	–	14"	–	–		
MASONRY				–		
WALL REINFORCEMENT		22"	27"	32"		

CONCRETE FOOTING SCHEDULE

MARK	DIMENSION			CROSS-WISE REINFORCING				LENGTH-WISE REINFORCING				COMMENTS
	WIDTH	LENGTH	THICK	NO.	SIZE	LENGTH	SPACE	NO.	SIZE	LENGTH	SPACE	
FC1.5	18"	CONT	12"	–	–	–	–	2	#4	CONT	EQUAL	
FC1.67	20"	CONT	10"	–	–	–	–	2	#4	CONT	EQUAL	
FC2.0	24"	CONT	10"					3	#4	CONT	EQUAL	
F3.0A	36"	36"	12"	3	#5	30"	EQUAL	4	#5	30"	EQUAL	2 MATS (SEE H/S1.1)
F3.0	36"	36"	12"	3	#5	30"	EQUAL	4	#5	30"	EQUAL	
F4.0	48"	48"	12"	4	#5	42"	EQUAL	4	#5	42"	EQUAL	
F5.0	60"	60"	12"	5	#5	54"	EQUAL	5	#5	54"	EQUAL	
F6.0	72"	72"	12"	6	#5	66"	EQUAL	6	#5	66"	EQUAL	

SEAL
REGISTERED PROFESSIONAL ENGINEER
BID SET
NO. 275617
BRIAN G. LYON
6/18/24
STATE OF UTAH

ALLIANCE CONSULTING ENGINEERS
150 EAST 200 NORTH SUITE P.
LOGAN, UTAH 84321
(435)755-5121
alliancelogan@yahoo.com

No.	REVISIONS/ SUBMISSIONS	DATE

REVIEWED :
DRAWN :
CAD FILE :
PROJECT NO. :

PROJECT TITLE: HOBBLE DOG PARADISE, UTAH

DRAWING TITLE: FOOTING/FOUNDATION DETAILS

DATE : JUNE,2024
DRAWING No. S1.0

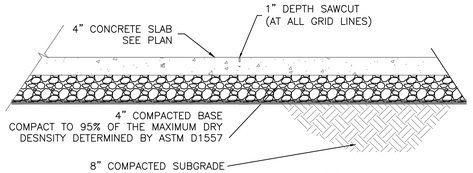

DETAIL A / S1.1
N.T.S.

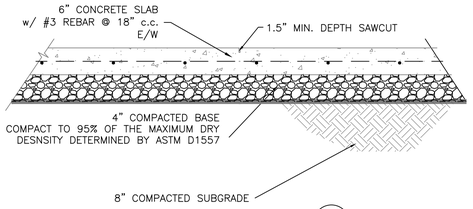

DETAIL A2 / S1.1
N.T.S.

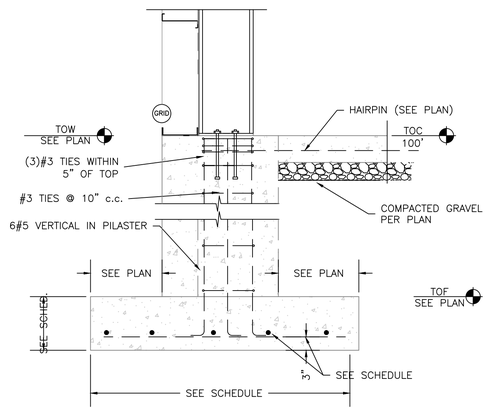

FOOTING DETAIL B / S1.1
N.T.S.

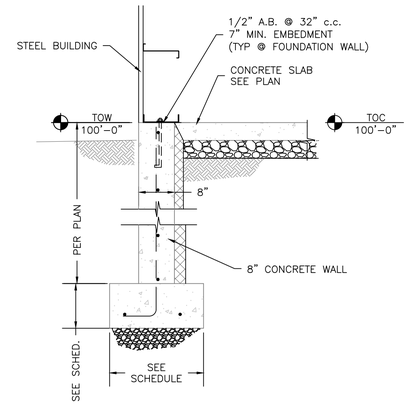

FOOTING DETAIL C / S1.1
N.T.S.

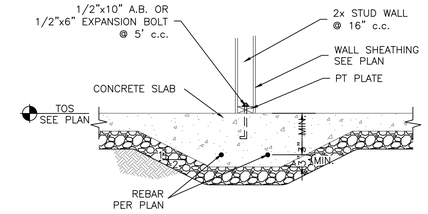

FOOTING DETAIL D / S1.1
N.T.S.

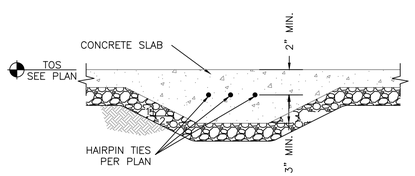

FOOTING DETAIL E / S1.1
N.T.S.

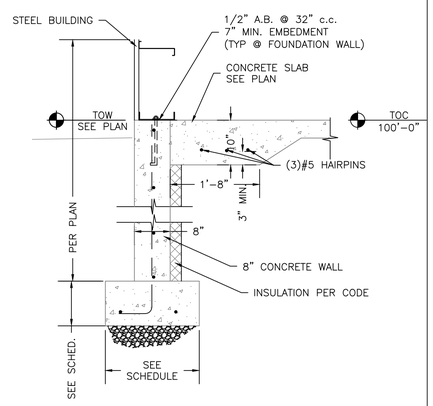

FOOTING DETAIL F / S1.1
N.T.S.

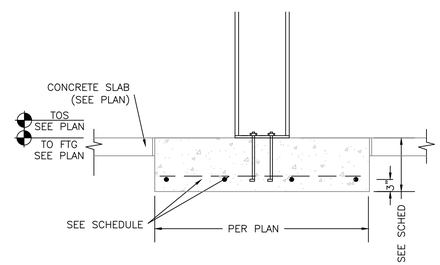

FOOTING DETAIL G / S1.1
N.T.S.

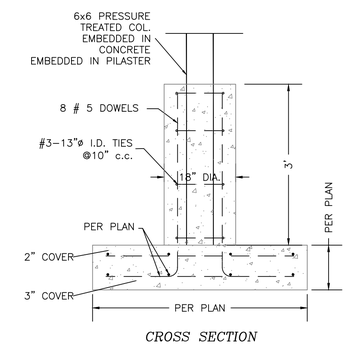

CROSS SECTION

NOTE: OPTIONAL SIMPSON MPBZ POST BASE CAN BE USED IN LIEU OF EMBEDDED POST

FOOTING DETAIL H / S1.1
N.T.S.

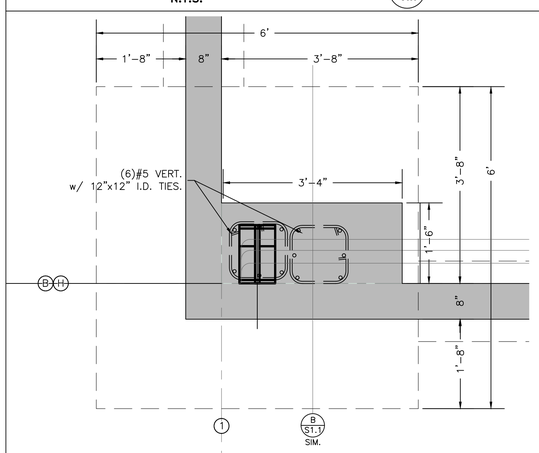

FOOTING DETAIL I / S1.1
N.T.S.

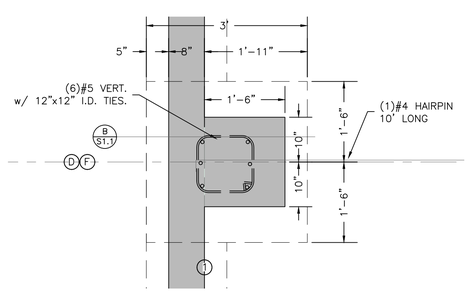

FOOTING DETAIL J / S1.1
N.T.S.

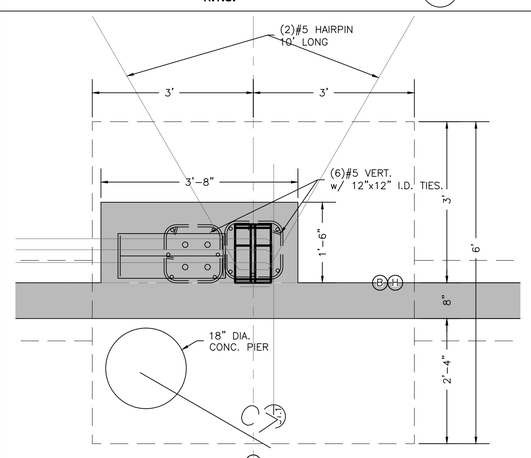

FOOTING DETAIL K / S1.1
N.T.S.

FOOTING DETAIL L / S1.1
N.T.S.

SEAL
REGISTERED PROFESSIONAL ENGINEER
BID SET
NO. 275617
BRIAN G. LYON
6/18/24
STATE OF UTAH

ALLIANCE CONSULTING ENGINEERS
150 EAST 200 NORTH SUITE P
LOGAN, UTAH 84321
(435)755-5121
alliancelogan@yahoo.com

No.	REVISIONS/ SUBMISSIONS	DATE

REVIEWED : DRAWN :
CAD FILE : PROJECT NO. :

PROJECT TITLE
HOBBLE DOG
PARADISE, UTAH

DRAWING TITLE
FOOTING/FOUNDATION DETAILS

DATE : JUNE,2024
DRAWING No. S1.1

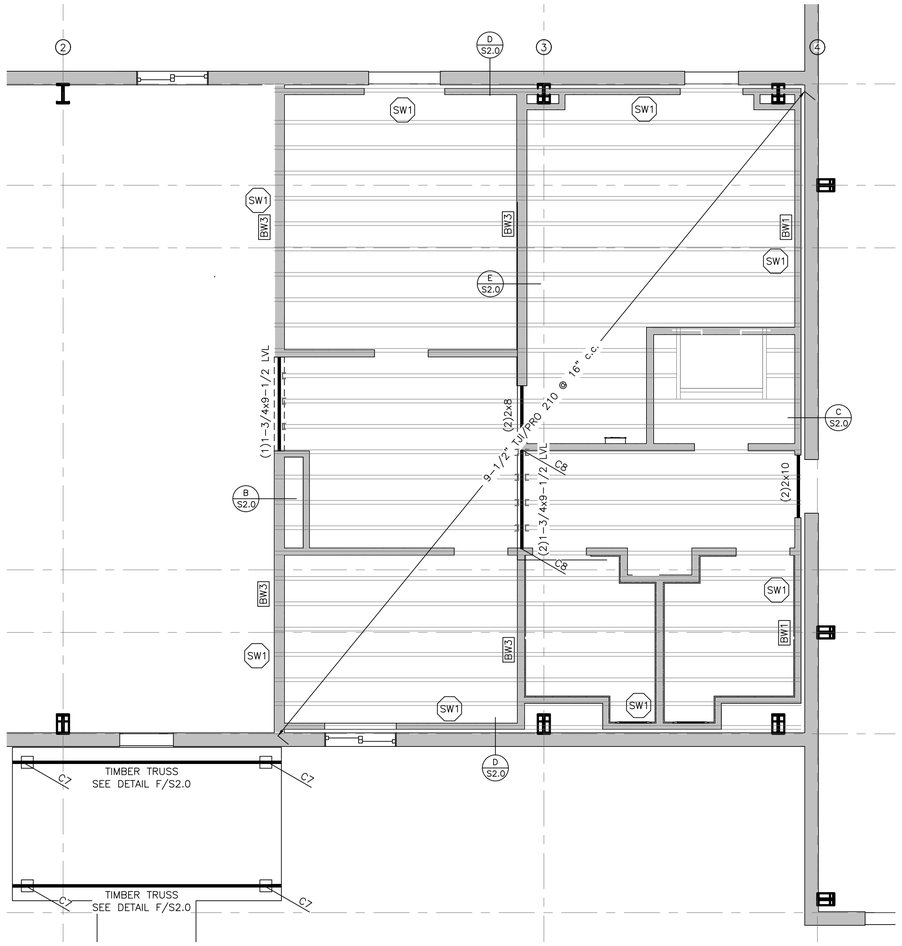

MEZZANINE/ENTRY FRAMING
SCALE: 1/4"=1'
A S2.0

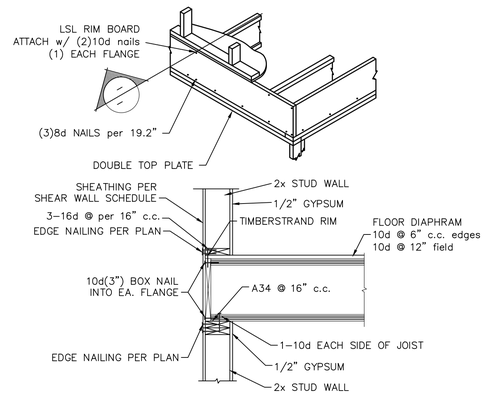

FRAMING DETAIL
N.T.S.
B S2.0

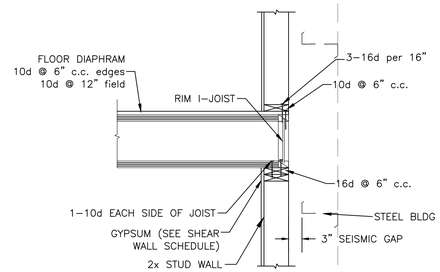

FRAMING DETAIL
N.T.S.
C S2.0

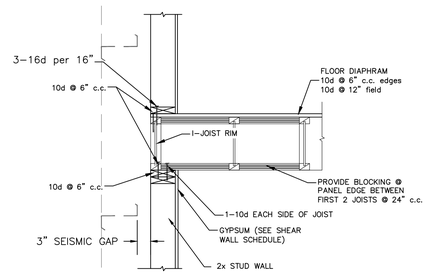

FRAMING DETAIL
N.T.S.
D S2.0

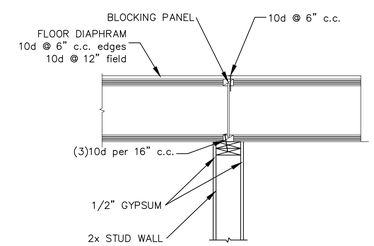

FRAMING DETAIL
N.T.S.
E S2.0

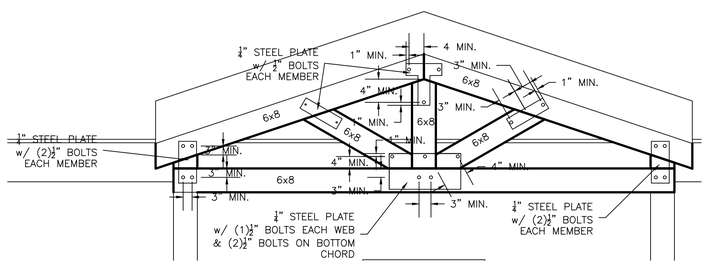

ENTRY TRIMBER TRUSS DETAIL
SCALE: 1/4"=1'
F S2.0

BEARING WALL SCHEDULE

MARK	TYPE	SIZE	NOTES
BW1	DF-L STUD	2x4 @ 16" c.c.	
BW2	DF-L #2	2x4 @ 16" c.c.	
BW3	DF-L STUD	2x6 @ 16" c.c.	
BW4	DF-L #2	2x6 @ 16" c.c.	
BW5	DF-L STUD	2x8 @ 16" c.c.	
BW6	DF-L #2	2x8 @ 16" c.c.	
BW7	DF-L #2	2x8 @ 12" c.c.	
BW8	LSL1.3E	1-3/4x5-1/2 @ 16" c.c.	
BW9	LSL1.3E	1-3/4x7-1/4 @ 16" c.c.	
BW10	LSL1.55E	1-3/4x7-1/4 @ 16" c.c.	

COLUMN SCHEDULE

MARK	TYPE	SIZE	NOTE
C1	DF-L#2	(2)2x6 TRIMMERS (1)2x6 KING STUDS	
C2	DF-L#2	(1)2x6 TRIMMERS (2)2x6 KING STUDS	
C3	DF-L#2	(2)2x6 TRIMMERS (2)2x6 KING STUDS	
C4	DF-L#2	(3)2x6 TRIMMERS (2)2x6 KING STUDS	
C5	DF-L#2	(3)2x6 TRIMMERS (3)2x6 KING STUDS	
C6	DF-L#2	4x4	
C7	DF-L#2	6x6	
C8	DF-L#2	(2)2x6	
C9	DF-L#2	(3)2x6	
C10	DF-L#2	(4)2x6	

SYMBOLS/LEGEND

SECTION MARK
SHEET NUMBER

DETAIL MARK
SHEET NUMBER

SHEARWALL SCHEDULE

SW1 — 1/2" GYPSUM BOARD ONE SIDE WITH 5D COOLER NAILS OR SCREWS AT 6" o.c. (PERIMETER), 16" o.c. (FIELD)
ANCHOR BOLTS: 1/2" @ 32" c.c.

REGISTERED PROFESSIONAL ENGINEER
BID SET
NO. 275617
BRIAN G. LYON
6/18/24
STATE OF UTAH
SEAL

ALLIANCE CONSULTING ENGINEERS
150 EAST 200 NORTH SUITE P
LOGAN, UTAH 84321
(435)755-5121
allianceloganl@yahoo.com

No.	REVISIONS / SUBMISSIONS	DATE

REVIEWED : DRAWN :
CAD FILE : PROJECT NO. :

PROJECT TITLE: HOBBLE DOG PARADISE, UTAH
DRAWING TITLE: MEZZANINE FRAMING

DATE : JUNE,2024
DRAWING No. S2.0