THE FOLLOWING DOCUMENTS ARE REQUIRED BEFORE A CERTIFICATE OF OCCUPANCY IS ISSUED:

- A CODE INSPECTION REPORT RECOMMENDING THAT A CERTIFICATE OF OCCUPANCY BE ISSUED.
- FINAL REPORT FROM THE SPECIAL INSPECTION AGENCY.
- FINAL APPROVAL FROM THE STATE ELEVATOR INSPECTOR, IF APPLICABLE.
- FINAL APPROVAL FROM THE STATE BOILER INSPECTOR, IF APPLICABLE.
- REPORT OF THE DISINFECTION OF THE POTABLE WATER SYSTEM. IPC 610
- A CERTIFICATE OF COMPLIANCE FROM THE APPROVED FABRICATOR, IF APPLICABLE. IBC 1704.2.2
- A STAMPED AND SIGNED FINAL REPORT FROM THE STRUCTURAL ENGINEER WHEN STRUCTURAL OBSERVATION IS REQUIRED BY IBC 1710.
- AN NFRC CERTIFICATE FOR FENESTRATION WITHOUT THE NFRC LABEL.
- FINAL REPORT FROM THE SPECIAL INSPECTOR AND THE MECHANICAL ENGINEER WHEN SMOKE CONTROL IS REQUIRED. THE REPORTS MUST COMPLY WITH IBC 909.18.8.3

WARM WATER AQUACULTURE BUILDING

LOGAN FISH HATCHERY

DEPARTMENT OF NATURAL RESOURCES

DIVISION OF WILDLIFE RESOURCES

OCTOBER 4, 2023

State of Utah—Department of Administrative Services

DIVISION OF FACILITIES CONSTRUCTION AND MANAGEMENT

4315 South 2700 West, Floor 3/Taylorsville, Utah 84129-2128

DFCM PROJECT NO. 20467520

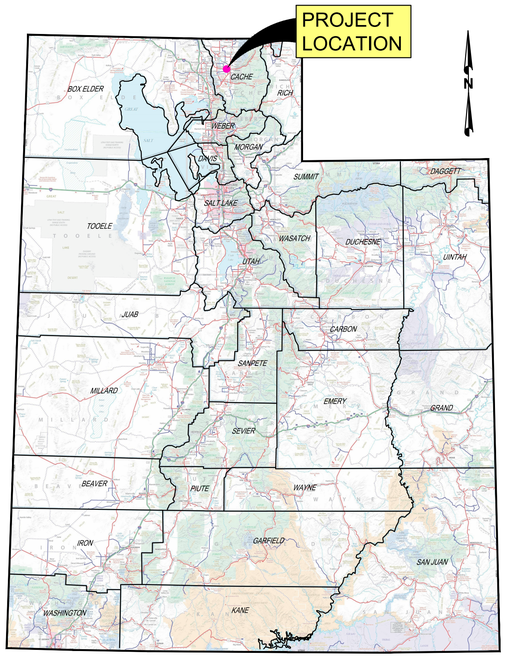

UTAH - PROJECT AREA MAP

NOT TO SCALE

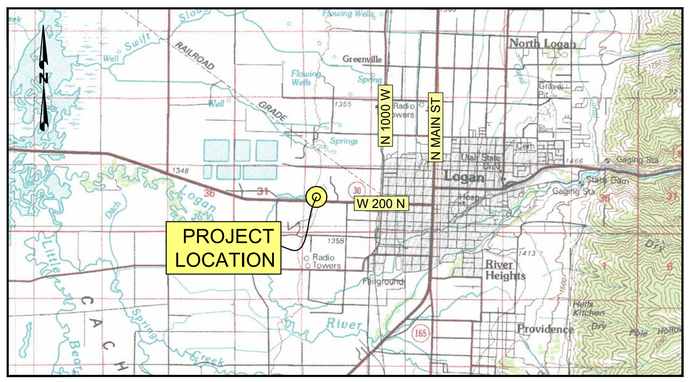

FISHERIES EXPERIMENT STATION - VICINITY MAP

NOT TO SCALE

ALL APPLICABLE REQUIREMENTS OF THE STATE FIRE MARSHALL AND STATE HEALTH DEPARTMENT HAVE BEEN INCORPORATED INTO THESE DRAWINGS

FORSGREN Associates Inc.

95 WEST 100 SOUTH, STE. 115, LOGAN, UT 84321

PH: 435.227.0333 FAX: 435.227.0334

ALL IMPROVEMENTS NOT SPECIFICALLY COVERED HEREIN BY THE CONTRACT DOCUMENTS MUST MEET OR EXCEED THE CURRENT UTAH "APWA STANDARDS FOR PUBLIC WORKS CONSTRUCTION". WHERE IMPROVEMENTS ARE NOT COVERED BY THE CONTRACT DOCUMENTS, THE OWNER WILL BE THE SOLE JUDGE IN ESTABLISHING APPROPRIATE STANDARDS.

DIVISION OF FACILITIES AND CONSTRUCTION MANAGEMENT
MR. TIM PARKINSON, PROJECT MANAGER
4315 SOUTH 2700 W FL 3, TAYLORSVILLE, UT. 84129-2128
(801) 450-2478

DEPARTMENT OF NATURAL RESOURCES
DIVISION OF WILDLIFE RESOURCES
MR. ROGER MELLENTHIN, FISH CULTURE COORDINATOR
1594 WEST NORTH TEMPLE, SUITE 2110, SALT LAKE CITY, UTAH 84114
(435) 890-8131

LOGAN FISHERIES EXPERIMENT STATION
MR. GARY HOWES, ON-SITE MANAGER
1465 WEST 200 NORTH, LOGAN, UTAH 84321
(435) 752-1066 EXT. 219

FORSGREN ASSOCIATES, INC
MR. ZACHARY HATFIELD, ENGINEERING TECHNICIAN
MR. ERIC DURSTELER, P.E., C.F.M., PROJECT MANAGER
95 WEST 100 SOUTH, STE 115, LOGAN, UTAH 84321
(435) 227-0333

MCMILLEN, INC
MS. JOY TERRY, P.E., PROJECT MANAGER
1471 SHORELINE DRIVE, SUITE 100, BOISE, IDAHO 83702
(208) 342-4214

DESIGN WEST ARCHITECTS, INC
MR. RYAN LEMON, AIA, PROJECT MANAGER
255 SOUTH 300 WEST, LOGAN, UTAH 84321
(435) 752-7031

GSH GEOTECHNICAL, INC
MR. ALAN SPILKER, PRESIDENT
473 WEST 4800 SOUTH, SALT LAKE CITY, UTAH 84123
(801) 685-9190

1 DFCM CODE REVIEW COMMENTS 11/17/2023
2 LOGAN CITY FEMA FLOODPLAIN REVIEW COMMENTS & RECOMENDATIONS 12/4/2023

SHEET INDEX

SHEET	TITLE	PAGE NO.
CS-1	COVER SHEET	1
GNS-1	GENERAL CONSTRUCTION NOTES & SPECIFICATIONS	2
SIF-1	DFCM SPECIAL INSPECTION FORMS	3
GPP-1	GENERAL PROJECT PLAN	4
SPP-1	CONSTRUCTION SITE PREPARATION PLAN	5
USP-1	GENERAL UTILITY SERVICE PLAN	6
SGP-1	SITE AND GRADING PLAN	7
DWP-1	DISCHARGE/RUNOFF WATER MANAGEMENT PLAN	8
D-1	GENERAL SITE CONSTRUCTION DETAILS	9
BD-2	BULK WATER DISPENSING STATION (TRUCK FILL)	10
BUILDING - ARCHITECTURAL DRAWINGS		
A001	CODE REVIEW	11
A101 - A104	BUILDING PLANS	12 - 15
A201 - A401	ELEVATIONS, BUILDING SECTIONS, ENLARGED PLANS	16 - 20
A501 - A601	DETAILS AND SCHEDULES	21 - 25
BUILDING - STRUCTURAL DRAWINGS		
S001 - S002	STRUCTURAL NOTES	26 - 27
S100 - S103	FOUNDATION, FLOOR SLAB, MEZZANINE, & BUILDING LOADS	28 - 31
S500 - S504	STRUCTURAL DETAILS	32 - 36
BUILDING - MECHANICAL & PLUMBING DRAWINGS		
M001 - MH101	MECHANICAL PLANS, SCHEDULES, & DETAILS	37 - 40
PL101 - PL601	PLUMBING PLANS, SCHEDULES, & DETAILS	41 - 43
BUILDING - ELECTRICAL DRAWINGS		
EE001	ABBREVIATIONS, G.P.N., LEGEND, & SHEET INDEX	44
ES101 - EL101	ELECTRICAL SITE AND ELECTRICAL LIGHTING PLANS	45 - 46
EP101 - EP104	POWER PLAN, ONE-LINE DIAGRAM, SCHEDULES AND DETAILS	47 - 50
BIO-PROCESS SYSTEMS - MECHANICAL DRAWINGS		
G001	DRAWING INDEX SHEET	51
G002 - G003	STANDARD ABBREVIATIONS, AND SYMBOLS	52 - 53
PF001 - PF109	PROCESS FLOW DIAGRAMS AND SCHEMATICS	54 - 64
GM001 - GM007	MECHANICAL PIPING AND SCHEDULES	65 - 73
M001 - M301	MODULE AND RAS SUPPLY PIPING PLANS, SECTIONS, AND DETAILS	74 - 106
BIO-PROCESS SYSTEMS - ELECTRICAL DRAWINGS		
GE001	ELECTRICAL ABBREVIATIONS AND DEVICE INDEXES	107
GE002 - GE003	ELECTRICAL SYMBOLS, SCHEDULES, AND DETAILS	108 - 109
GE004 - GE010	LUMINARIES, INSTRUMENTATION, CABLE, AND CONDUIT SCHEDULES	110 - 116
E100 - E109	RAS AND TANK ELECTRICAL AND AREA LIGHTING PLANS	117 - 126
E120	CABLE TRAY LAYOUT	127
E200 - E201	INCUBATION ELECTRICAL AND LIGHTING PLAN	128 - 129
E300	SCADA BLOCK DIAGRAM	130
E301	MASTER PLC I/O PANEL LAYOUT	131
E302	MASTER PLC I/O BILL OF MATERIALS	132
E303	MASTER PLC I/O 24VDC POWER DISTRIBUTION	133
E304 - E311	MASTER PLC I/O SCHEMATICS	134 - 141
E320	REMOTE I/O PANEL LAYOUT	142
E321	REMOTE I/O BILL OF MATERIALS	143
E322	REMOTE I/O 24VDC POWER DISTRIBUTION	144
E323 - E331	REMOTE I/O SCHEMATICS	145 - 153
E400 - E401	RAS PUMP CONTROL SCHEMATIC AND PANEL LAYOUT	154 - 155
GI001	INSTRUMENTATION LEGEND, SYMBOLS, AND ABBREVIATIONS	156
I101 - I107	INSTRUMENTATION COMPONENTS AND SCHEMATICS	157 - 163
ISL50 HYPERFUSION ASSEMBLY AND FACILITIES DRAWINGS		
H001 - H002	SITE CONSTRUCTION PLANS	164 - 165
H003	DEMOLITION, REMOVAL, AND INSTALLATION PLAN	166
H004 - H005	ILS50, FLOW MIXING AND PSV/PRV VAULT SECTIONS AND DETAILS	167 - 168

1

CONTRACTOR SHALL NOTE THE FOLLOWING REQUIRED DEFERRED SUBMITTALS FOR THIS PROJECT:

1. WARM WATER AQUACULTURE BUILDING: PRE-FABRICATED METAL BUILDING STRUCTURAL DESIGN AND RESPECTIVE CALCULATIONS.
   APPROXIMATE REVIEW SUBMITTAL DUE DATE: MARCH 18, 2024
2. SEISMIC BRACING: MECHANICAL & ELECTRICAL SEISMIC BRACING (SEE CHECKLIST ON SHEET S001) STRUCTURAL DESIGN AND RESPECTIVE CALCULATIONS
   APPROXIMATE REVIEW SUBMITTAL DATE: MAY 1, 2024

SUBMITTALS SHALL BE SUPPLIED TO THE BUILDING OFFICIAL FOR REVIEW WITH AN ACCOMPANIED LETTER FROM THE ARCHITECT STATING THAT THE DRAWINGS ARE IN CONFORMANCE WITH HIS DESIGN. WORK RELATED TO THE DEFERRED SUBMITTALS IS NOT TO COMMENCE UNTIL THE BUILDING OFFICIAL HAS APPROVED THE SUBMITTAL

REVIEWED FOR CODE COMPLIANCE
Thomas W Peterson
12/14/2023
DIVISION OF FACILITIES CONSTRUCTION AND MANAGEMENT

DFCM CODE COMPLIANCE OFFICER REVIEW

REGISTERED PROFESSIONAL ENGINEER
ERIC E. DURSTELER
NO. 323794
10-4-22
STATE OF UTAH

COMPLIANCE WITH GOVERNMENTAL REGULATIONS:

THE CONTRACTOR'S PERSONNEL, EQUIPMENT, AND OPERATIONS SHALL COMPLY FULLY WITH ALL APPLICABLE STANDARDS, REGULATIONS, AND REQUIREMENTS OF EXISTING FEDERAL, UTAH STATE, AND LOCAL GOVERNMENTAL AGENCIES. THIS SHALL INCLUDE, BUT NOT NECESSARILY BE LIMITED TO, THE FOLLOWING:

1. UNITED STATES OCCUPATIONAL SAFETY AND HEALTH ADMINISTRATION REGULATIONS: TITLE 29 OF THE CODE OF FEDERAL REGULATIONS, PART 1926 (29 CFR PART 1926), SAFETY AND HEALTH REGULATIONS FOR CONSTRUCTION.
2. UTAH STATE INDUSTRIAL COMMISSION REGULATIONS: THE UTAH OCCUPATIONAL SAFETY AND HEALTH ACT AND EMPLOYER-EMPLOYEE SAFE PRACTICES FOR EXCAVATIONS AND TRENCHING OPERATIONS (JAN. 1, 1974), AS PUBLISHED BY THE UTAH STATE INDUSTRIAL COMMISSION, INCLUDING ANY AND ALL AMENDMENTS OR REVISIONS EFFECTIVE PRIOR TO PERFORMANCE OF THE WORK.
3. PRINCIPAL STANDARDS AND SPECIFICATIONS: THE CONTRACTOR SHALL BE REQUIRED TO COMPLY WITH THE 2017 "MANUAL OF STANDARD SPECIFICATIONS" BY THE UTAH CHAPTER OF AMERICAN PUBLIC WORKS ASSOCIATION (APWA) IN CONCERT WITH THE CONTRACT DOCUMENTS.
4. PERMITS: THE CONTRACTOR IS RESPONSIBLE TO OBTAIN ALL REQUIRED LICENSES AND PERMITS APPLICABLE TO THIS PROJECT. CONTRACTOR SHALL BE SUBJECT TO THE CONDITIONS OF ALL PERMITS AND AGREEMENTS BETWEEN THE AGENCY AND THE PERMITTING AGENCIES.
5. ARCHEOLOGICAL FINDINGS: IF A SUSPECTED OR UNSUSPECTED HISTORIC, ARCHEOLOGICAL, OR PALEONTOLOGICAL ITEM, FEATURE, REMAINS, OR SITE IS ENCOUNTERED, CONSTRUCTION OPERATIONS SHALL BE IMMEDIATELY STOPPED IN THE VICINITY OF THE DISCOVERY AND THE OWNER AND ENGINEER SHALL BE IMMEDIATELY NOTIFIED OF THE NATURE AND EXACT LOCATION OF THE FINDINGS. THE CONTRACTOR SHALL NOT DISTURB, REMOVE, DAMAGE, OR OTHERWISE IMPACT THE DISCOVERED OBJECTS AND SHALL PROVIDE WRITTEN CONFIRMATION OF THE DISCOVERY TO THE OWNER ENGINEER WITHIN TWO (2) CALENDAR DAYS.

FEDERAL, STATE, AND LOCAL INSPECTING AGENCIES:

THE SITE OF CONSTRUCTION IS TO BE OPEN AT ALL REASONABLE TIMES AND PLACES FOR PERIODIC OBSERVATION BY ACCREDITED REPRESENTATIVES OF THE FEDERAL, STATE, AND LOCAL AGENCIES WHO HAVE REGULATORY OR SUPERVISORY AUTHORITY OVER ANY PART OF THE WORK PROPOSED OR REGULATED THERETO.

WORKMANSHIP:

1. THE CONTRACTOR SHALL BE SKILLED AND REGULARLY ENGAGED IN THE GENERAL CLASS AND TYPE OF WORK CALLED FOR IN THE PROJECT PLANS AND SPECIFICATIONS. THEREFORE, THE OWNER IS RELYING UPON THE EXPERIENCE AND EXPERTISE OF THE CONTRACTOR TO EXECUTE THE WORK IN A GOOD AND WORKMANLIKE MANNER AND THAT THE WORK BE COMPLETED IN ACCORDANCE WITH THE TRUE INTENT AND PURPOSE OF THE SAME.
2. ALL WORK SHALL BE DONE IN ACCORDANCE WITH, ALL LAWS, ORDINANCES, BUILDING CODES, RULES AND REGULATIONS APPLYING TO THE WORK, INCLUDING, BUT NOT LIMITED TO, THE AMERICANS WITH DISABILITIES ACT, ENVIRONMENTAL REGULATIONS AND THE OCCUPATIONAL SAFETY AND HEALTH ACT OF 1970, AS AMENDED. CONTRACTOR SHALL HAVE CONTROL OVER, AND BE SOLELY RESPONSIBLE FOR, ALL MEANS, METHODS AND SEQUENCES FOR PERFORMING THE WORK.
3. THE CONTRACTOR SHALL ASSUME SOLE AND COMPLETE RESPONSIBILITY FOR JOBSITE CONDITIONS DURING THE COURSE OF CONSTRUCTION OF THIS PROJECT, INCLUDING SAFETY OF ALL PERSONS AND PROPERTY; THAT THIS REQUIREMENT SHALL APPLY CONTINUOUSLY AND NOT BE LIMITED TO NORMAL WORKING HOURS; AND THAT THE CONTRACTOR SHALL DEFEND, INDEMNIFY AND HOLD THE OWNER AND ENGINEER HARMLESS FROM ANY AND ALL LIABILITY, REAL OR ALLEGED, IN CONNECTION WITH THE PERFORMANCE OF WORK ON THIS PROJECT, EXCEPTING FOR LIABILITY ARISING FROM THE SOLE NEGLIGENCE OF THE OWNER OR THE ENGINEER.
4. THE CONTRACTOR SHALL MAINTAIN A NEATLY MARKED SET OF FULL-SIZE AS-BUILT RECORD DRAWINGS SHOWING THE FINAL LOCATION AND LAYOUT OF ALL IMPROVEMENTS INSTALLED, ERECTED, AND/OR CONSTRUCTED UNDER THE AGREEMENT.

UNDERGROUND UTILITIES:

THE EXISTING UTILITIES AND/OR IMPROVEMENT INFORMATION SHOWN ON THE PLANS WAS DERIVED FROM TOPOGRAPHIC SURVEYS, FIELD INVESTIGATIONS AND/OR FROM AVAILABLE DRAWING INFORMATION. NEITHER THE OWNER NOR ENGINEER GUARANTEES THESE LOCATIONS TO BE EITHER TRUE OR EXACT. IT SHALL BE THE CONTRACTOR'S SOLE RESPONSIBILITY TO VERIFY ALL EXISTING IMPROVEMENTS AND TO EXPOSE ALL EXISTING UNDERGROUND UTILITIES TO THE EXTENT NECESSARY IN ORDER TO DULY EXECUTE THE WORK.

CONTRACTOR'S SITE INSPECTION:

1. THE CONTRACTOR SHALL INSPECT THE SITE OF THE WORK PRIOR TO BIDDING TO SATISFY ITSELF, BY PERSONAL EXAMINATION OR BY SUCH OTHER MEANS AS THEY MAY PREFER, OF THE LOCATION OF THE PROPOSED WORK, AND OF THE ACTUAL CONDITIONS OF AND AT THE SITE OF WORK. THE INFORMATION PROVIDED BY THE OWNER OR THE ENGINEER IS NOT INTENDED TO BE A SUBSTITUTE FOR, OR A SUPPLEMENT TO, THE INDEPENDENT VERIFICATION BY THE CONTRACTOR.
2. THE CONTRACTOR SHALL BE HELD RESPONSIBLE AND SHALL BEAR ALL COSTS AND/OR EXPENSES FOR ANY FIELD CHANGES MADE WITHOUT PRIOR WRITTEN AUTHORIZATION FROM THE OWNER.

PUBLIC SAFETY AND CONVENIENCE:

THE CONVENIENCE OF THE GENERAL PUBLIC AND THE PROTECTION OF PERSONS AND PROPERTY IS OF PRIME IMPORTANCE AND SHALL BE PROVIDED FOR BY THE CONTRACTOR DURING THIS PROJECT. CONTRACTOR SHALL USE EVERY REASONABLE PRECAUTION TO SAFEGUARD PERSONS AND PROPERTY. FAILURE OF THE OWNER, AGENCY, OR ENGINEER TO NOTIFY THE CONTRACTOR OF ANY DEFICIENCIES IN PROVIDING FOR PUBLIC SAFETY AND CONVENIENCE SHALL NOT RELIEVE THE CONTRACTOR FROM ITS RESPONSIBILITY. THE CONTRACTOR SHALL BE REQUIRED TO COMPLY WITH THE REQUIREMENTS OF THE MANUAL ON UNIFORM TRAFFIC CONTROL DEVICES (MUTCD).

PROJECT DESCRIPTION:

BACKGROUND: THE LOGAN FISHERIES EXPERIMENT STATION (FES) WAS CREATED IN THE EARLY 1960S TO PROVIDE TECHNICAL DEVELOPMENT AND EXTENSION SUPPORT FOR THE UTAH STATE FISH CULTURE PROGRAM AND TO ASSIST IN PREVENTION OF THE SPREAD OF FISH PATHOGENS IN UTAH. THE LOGAN FISH HATCHERY ALSO SUPPORTS THE CULTURE OF MANY FISH SPECIES FOR COOL AND WARM WATER FISHING THROUGHOUT THE STATE. THE FES HAS SEEN LOW TRIPLOID SURVIVAL RATES WITH THE WALLEYE PROGRAM AND AS SUCH DESIRES TO CONSTRUCT A FACILITY WHICH WILL PROVIDE MORE CONTROL OVER THE INCUBATION, REARING, AND TRIPLOIDING PROCESSES FOR VARIOUS PROGRAMS AND SPECIES.

THE PROPOSED SYSTEMS FOR THE WARM WATER AQUACULTURE BUILDING (WWAB) WILL BE USED TO HATCH AND RAISE WIPER AND WALLEYE INITIALLY BUT MAY EVENTUALLY INCLUDE STRIPED BASS (WIPER), WALLEYE, SAUGEYE, CHANNEL CATFISH, CRAPPIE, BLUE GILL, LARGEMOUTH BASS, AND TIGER MUSKY.

THE PROJECT GENERALLY INCLUDES SITE PREPARATION ACTIVITIES, CONSTRUCTION OF THE UNDERGROUND UTILITY SERVICES AND WATER MANAGEMENT SYSTEMS, CONSTRUCTION OF THE WARM WATER AQUACULTURE BUILDING AND ADJACENT CONCRETE PAVEMENTS, AND CONSTRUCTION OF THE EXTENDED-STAY TRAILER SITES AND ASPHALT ACCESS ROADWAY.

THE PROJECT WILL GENERALLY BE COMPLETED UNDER THE FOLLOWING WORK TASKS AND INCLUDES ALL WORK AND MATERIALS NECESSARY TO CONSTRUCT EACH ITEM COMPLETE AS TO FORM AND FUNCTION:

1. BACKFILL EXISTING DITCH FROM WELL NO. 4 TO BANK OF SLOUGH AND REMOVE ALL SURFACE VEGETATION AND SOFT SOILS AND FILL WITH SUITABLE STRUCTURAL FILL MATERIAL.
2. RELOCATE EXISTING FIRE HYDRANT AND CONSTRUCT "EAST-SIDE" DISCHARGE/RUNOFF WATER MANAGEMENT SYSTEM (WEST-SIDE SYSTEM CONSTRUCTED UNDER PRIOR CONTRACT WORK).
3. CONSTRUCT UNDERGROUND UTILITY SERVICES TO THE WARM WATER AQUACULTURE BUILDING INCLUDING NATURAL GAS, PRIMARY POWER, TELECOM, AND OXYGEN SUPPLY LINE.
4. CONSTRUCT THE WARM WATER AQUACULTURE BUILDING AND ALL APPURTENANT FACILITIES THEREIN AND THOSE ATTACHED THERETO.
5. CONSTRUCT PORTLAND CEMENT CONCRETE DRIVEWAYS/ACCESS PAVEMENTS OUTSIDE OF AND ADJACENT TO THE WARM WATER AQUACULTURE BUILDING.
6. CONSTRUCT EXTENDED-STAY TRAILER (RV) SITES INCLUDING YARD HYDRANT AND POWER PEDESTAL, SEWER HOOKUP ASSEMBLY, WATER SERVICE LINES, SEWER SERVICE LINES, AND ASPHALT PARKING PAD AND GRAVEL ROADWAY ACCESS/PARKING AREAS.
7. CONSTRUCT ASPHALT PAVEMENT FROM THE EXISTING FES ACCESS ROADWAY TO THE WARM WATER AQUACULTURE BUILDING.
8. INSTALL THE OWNER-PROVIDED HYPERFUSION "ILS50" DEGASSING UNIT IN THE EXISTING HATCHERY BUILDING AND FURNISH AND INSTALL THE PRESSURE BOOSTER PUMPS, FLOW MIXING VAULT AND THE PRESSURE SUSTAINING VALVE ASSEMBLIES DOWNSTREAM OF THE HYPERFUSION UNIT INCLUDING ALL APPURTENANT PIPING, FITTINGS, VALVES, CONTROLS, AND ELECTRICAL CONNECTIONS.

PROJECT COORDINATION AND MEETINGS

1. THE CONTRACTOR SHALL BE RESPONSIBLE TO COORDINATE ITS WORK WITH DFCM AND FES PERSONNEL DURING THE COURSE OF THIS PROJECT.
2. THE CONTRACTOR SHALL BE REQUIRED TO ATTEND MEETINGS PRIOR TO AND DURING EXECUTION OF THE WORK, OR AS NECESSARY TO FACILITATE THE SMOOTH AND ORDERLY EXECUTION OF THE WORK. ALL MEETINGS SHALL BE HELD AT A LOCATION DESIGNATED BY THE OWNER.
3. THE CONTRACTOR SHALL CONDUCT DAILY SITE SAFETY BRIEFINGS AS NECESSARY FOR CONTRACTOR AND SUBCONTRACTOR EMPLOYEES WORKING THE SITE, IN COMPLIANCE WITH OSHA RULES.
4. ALL MEETINGS WITH THE OWNER (OR ITS REPRESENTATIVE) SHALL BE ATTENDED BY THE CONTRACTOR'S SUPERINTENDENT AND OTHER PERSONNEL HAVING AUTHORITY TO LEGALLY BIND CONTRACTOR TO ISSUES DISCUSSED AND RESOLVED DURING THE MEETINGS. THE CONTRACTOR'S SUBCONTRACTOR(S) MAY ALSO BE REQUIRED TO ATTEND SUCH MEETINGS. SUBCONTRACTOR ATTENDANCE SHALL BE AT THE DISCRETION OF THE RESIDENT ENGINEER AND/OR THE OWNER.
5. THE CONTRACTOR SHALL BE REQUIRED TO ATTEND ALL MEETINGS ORDERED OR REQUESTED BY REPRESENTATIVES OF REGULATORY AGENCIES WITH JURISDICTION OVER THE SITE OR ANY ASPECT OF THE WORK BEING PERFORMED AT THE SITE, EITHER BY THE CONTRACTOR OR OTHERS. SOME MEETINGS MAY BE AFTER HOURS.

PLANS AND SPECIFICATIONS:

1. ANY AMBIGUITIES OR CONFLICTS IDENTIFIED BY THE CONTRACTOR, CONTRACTOR'S REPRESENTATIVE, OWNER, OR DEPARTMENT OF FACILITIES AND CONSTRUCTION MANAGEMENT (DFCM) SHALL BE BROUGHT TO THE IMMEDIATE ATTENTION OF THE ENGINEER.
2. IT IS INTENDED THAT THESE PLANS AND SPECIFICATIONS REQUIRE ALL LABOR AND MATERIALS NECESSARY AND ORDINARY FOR PROPER COMPLETION OF THE WORK PROPOSED HEREIN AND THAT THE WORK BE COMPLETED IN ACCORDANCE WITH THEIR TRUE INTENT AND PURPOSE.
3. WHERE THE PLANS OR SPECIFICATIONS DESCRIBE PORTIONS OF THE WORK IN GENERAL TERMS BUT NOT COMPLETE DETAIL, IT IS UNDERSTOOD THAT ONLY THE BEST GENERAL PRACTICE IS TO PREVAIL AND THAT ONLY MATERIALS AND WORKMANSHIP OF THE FIRST QUALITY ARE TO BE USED.
4. THE WORK SHALL BE CONSTRUCTED IN ACCORDANCE WITH SAID CONTRACT DRAWINGS, THE TECHNICAL SPECIFICATIONS, AND SUCH FURTHER WORKING AND DETAILED PLANS AS MAY BE FURNISHED FROM TIME TO TIME BY THE ENGINEER. DETAILS SHOWN ON THE PLANS ARE INDICATIVE OF THE TYPE OF WORK REQUIRED AND ARE SUBJECT TO REVISION, ALTERATION, MODIFICATION AND VARIATION. SAID REVISION, ALTERATION, MODIFICATION AND/OR VARIATION, THOUGH DESIRABLE WITH RESPECT TO IMPROVING UPON THE ORIGINAL INTENT OF THE WORK SCOPE, SHALL NEVERTHELESS BE CONSIDERED INCIDENTAL TO THE OVERALL COST OF THE WORK. SUCH INCIDENTAL REVISIONS, ALTERATIONS, MODIFICATIONS AND/OR VARIATIONS THAT ARE DESIRABLE IN OPINION OF THE PROJECT OWNER OR ENGINEER, ON ACCOUNT OF CONDITIONS ENCOUNTERED OR FOR OTHER REASONS, SHALL NOT BE CONSIDERED A VARIATION OF THE TERMS OF THE CONTRACT.
5. FIGURED PLAN DIMENSIONS ARE TO PREVAIL OVER SCALED DIMENSIONS. ALL THINGS WHICH IN THE OPINION OF THE ENGINEER MAY BE FAIRLY INFERRED FROM THE PLANS ARE TO BE EXECUTED BY THE CONTRACTOR AS PART OF THE CONTRACT, AND THE PROJECT OWNER AND/OR ENGINEER SHALL BE THE SOLE JUDGE AS TO WHETHER THE DETAIL PLANS CONFORM TO THE GENERAL PLANS.
6. PLANS, CALCULATIONS, ESTIMATES OF QUANTITIES, AND ANY STATEMENT MADE IN THE INFORMATION FOR CONTRACTOR OR OTHERWISE AS TO THE CONDITION UNDER WHICH THE WORK IS TO BE PERFORMED, ARE NOT GUARANTEED BY THE PROJECT OWNER OR THE ENGINEER TO BE CORRECT, OR TO BE A COMPLETE REPRESENTATION OF ALL EXISTING DATA ON THE CONDITIONS AFFECTING THE WORK, AND THE CONTRACTOR AGREES THAT HE/SHE HAS MADE HIS OWN EXAMINATIONS AND WILL MAKE NO CLAIM FOR DAMAGES ON ACCOUNT OF ANY ERROR OR OMISSION IN ANY PLANS, CALCULATIONS, ESTIMATES OF QUANTITIES, OR ANY STATEMENTS MADE IN THE INFORMATION FOR BIDDERS OR OTHERWISE AS TO THE CONDITIONS UNDER WHICH THE WORK IS TO BE PERFORMED. ADDITIONALLY, CONTRACTOR SHALL REPORT SUCH DISCREPANCY, ERROR, OR OMISSION TO THE PROJECT OWNER AND ENGINEER IN WRITING AS SOON AS IT COMES TO HIS KNOWLEDGE, AND BEFORE PROCEEDING WITH WORK RELATING TO SUCH DISCREPANCY, ERROR OR OMISSION.

ANY CORRECTION OR MODIFICATION OF THE PLANS OR SPECIFICATIONS MAY BE MADE BY DFCM OR THE ENGINEER WHEN NECESSARY, IN HIS/HER OPINION, FOR THE PROPER FULFILLMENT OF THEIR PURPOSE OR FOR THEIR PROPER INTERPRETATION. ANY CORRECTION OR MODIFICATION OF THE PLANS MAY BE MADE BY THE CONTRACTOR WHEN NECESSARY WHEN APPROVED BY THE DESIGN ENGINEER AND DFCM.

DFCM CONSTRUCTION REQUIREMENTS:

CONSTRUCTION OF NEW STATE BUILDINGS AND REMODELING OF EXISTING BUILDINGS SHALL COMPLY WITH ALL THE REQUIREMENTS OF THE DFCM STANDARDS, INCLUDING ENHANCED ACCESSIBILITY. THE DFCM STANDARDS CAN BE FOUND AT THE FOLLOWING WEB SITE: WWW.DFCM.UTAH.GOV. CONTRACTOR SHALL BE FAMILIAR WITH AND COMPLIANT WITH DFCM STANDARDS AND REQUIREMENTS FOR THIS PROJECT.

CHANGES IN THE WORK:

THE OWNER SHALL HAVE THE RIGHT, WITHIN THE GENERAL SCOPE OF THE WORK, TO MAKE CHANGES IN THE WORK, INCLUDING BUT NOT LIMITED TO CHANGES IN THE PLANS AND SPECIFICATIONS PERTAINING TO BEACH WIDTH, BEACH ELEVATION, BEACH VOLUME, BEACH LENGTH, ENVIRONMENTAL PROTECTION, IN OR TO THE METHOD OR MANNER OF PERFORMANCE OF THE WORK, IN OR TO EQUIPMENT, MATERIALS, SERVICE OR SITE, IN OR TO THE MODE OR MANNER OR PERFORMANCE OF THE WORK. THE CONTRACTOR SHALL PROMPTLY COMPLY WITH ANY AND ALL WRITTEN CHANGE ORDERS ISSUED BY THE ENGINEER AND/OR OWNER.

STORMWATER AND EROSION CONTROL:

1. THE DISTURBANCE AREA AT THE SITE WILL BE LESS THAN ONE ACRE IN TOTAL AND THEREFORE NOT UNDER THE JURISDICTION OF THE NPDES GENERAL CONSTRUCTION PERMIT PROCESS. REGARDLESS OF THE NEED FOR A SWPPP UNDER THE NPDES PERMIT, THE CONTRACTOR SHALL BE RESPONSIBLE FOR DEVELOPING A SITE-SPECIFIC SEDIMENT AND EROSION CONTROL PLAN WHICH SHALL BE SUBMITTED TO DFCM AND THE OWNER. THE CONTRACTOR'S PLAN SHALL BE DESIGNED TO ACCOUNT FOR THE ANTICIPATED WORK PLAN, CONSTRUCTION SEQUENCE, AND ANTICIPATED LEVEL OF DISTURBANCE.
2. CONTRACTOR'S SEDIMENT AND EROSION CONTROL PLAN SHALL BE IMPLEMENTED AND UPDATED FROM THE COMMENCEMENT OF ANY SOIL DISTURBING ACTIVITIES AT THE SITE, UNTIL FINAL STABILIZATION OF THE PROJECT.

SURVEY CONTROL AND BENCHMARKS:

1. THE CONTRACTOR SHALL ESTABLISH LINES AND GRADES AND LAYOUT ALL WORK FOR THE PROJECT, SHALL BE RESPONSIBLE FOR ESTABLISHING ELEVATIONS, TEMPORARY BENCHMARKS, BASELINES, LEVELS, REFERENCE MARKS, BATTER BOARDS, ETC., AND SHALL LOCATE AND PROTECT SURVEY CONTROL AND REFERENCE POINTS PROVIDED BY THE OWNER. ADDITIONAL CONTROL ESTABLISHED BY THE CONTRACTOR WITHIN THE PROJECT AREA SHALL BE PROTECTED FROM DISTURBANCE.
2. THE CONTRACTOR SHALL PROVIDE BENCHMARKS IN THE FIELD TO ESTABLISH REFERENCE POINTS (HORIZONTAL AND VERTICAL CONTROL) WHICH IN HIS JUDGMENT ARE NECESSARY TO ENABLE THE CONTRACTOR TO PROCEED WITH THE WORK. THE ENGINEER RESERVES THE RIGHT TO VERIFY CORRECTNESS OF THE LAYOUT OF THE WORK AND SLOPE GRADES DURING THE PROGRESS OF THE WORK. WHERE BENCHMARKS AND REFERENCES WILL UNAVOIDABLY BE DESTROYED BY THE CONSTRUCTION, CONTRACTOR SHALL ESTABLISH TEMPORARY OR SECONDARY REFERENCE POINTS OUTSIDE OF THE CONSTRUCTION AREA BEFORE THE BENCHMARKS ARE DEMOLISHED, AND SHALL PROTECT AND MAINTAIN SUCH TEMPORARY POINTS DURING CONSTRUCTION.
3. THE CONTRACTOR IS RESPONSIBLE FOR ALL CONSTRUCTION SURVEYING AND STAKING FOR COMPLETION OF THE WORK.
3. NO CHANGE IN DESIGN LOCATION OR GRADE SHALL BE MADE BY THE CONTRACTOR WITHOUT WRITTEN APPROVAL FROM THE ENGINEER.
4. HORIZONTAL DATUM: NORTH AMERICAN DATUM OF 1983 (N.A.D. 83) (2011) EPOCH 2010; VERTICAL DATUM: NORTH AMERICAN VERTICAL DATUM OF 1988 (N.A.V.D. 88).

GENERAL CONSTRUCTION NOTES:

1. THE CONTRACTOR SHALL BE RESPONSIBLE TO MAINTAIN THE SITE IN A NEAT, SAFE AND ORDERLY MANNER AT ALL TIMES.
2. ALL EXCESS SOILS AND MATERIALS SHALL BE STOCKPILED ON SITE AT A LOCATION DESIGNATED BY THE OWNER.
3. IN THE EVENT EXISTING SIGNAGE, LANDSCAPE FEATURES, OR ANY SUCH/OTHER IMPROVEMENTS NEED TO BE DISTURBED AND/OR REMOVED AND REPLACED FOR THE PROPER PLACEMENT OF IMPROVEMENTS TO BE CONSTRUCTED, THE COST OF REPLACING OR REPAIRING SUCH EXISTING IMPROVEMENTS SHALL BE INCLUDED IN THE RESPECTIVE UNIT PRICE BID ITEM.
4. ALL POLYVINYL CHLORIDE PIPE (PVC) SHALL BE RIGID, THERMOPLASTIC PRESSURE CLASS 150 AND MEET THE REQUIREMENTS OF ANSI/AWWA STANDARD C900 FOR WATER DISTRIBUTION PIPE.
5. ALL FITTINGS FOR POLYVINYL CHLORIDE PIPE (PVC) SHALL BE DUCTILE IRON (DI) AND SHALL MEET THE REQUIREMENTS OF NSF 61 AND ANSI/AWWA C110/A21.10-82 OR C-153/A21.53-58.
6. ALL PVC/PE/HDPE PIPE, INCLUDING WATER SERVICE CONNECTIONS SHALL INCLUDE A #12 TRACER WIRE ATTACHED TO THE TOP OF THE PIPE.
7. ALL HIGH DENSITY POLYETHYLENE PIPE (HDPE) PIPE SHALL BE PE3608 MADE OF HIGH DENSITY, HIGH MOLECULAR WEIGHT RESIN MANUFACTURED ACCORDING TO ASTM D3350, F714, OR API 15LE ANDAWWA C906. SEE PLANS FOR PIPE DR REQUIREMENTS.
8. CONTRACTOR SHALL PROVIDE TEMPORARY SAFETY FENCING AND BARRIER AROUND EXCAVATIONS AND PROJECT SITE DURING CONSTRUCTION.

EARTHWORK AND GRADING:

1. A GEOTECHNICAL REPORT ENTITLED, "GEOTECHNICAL STUDY, PROPOSED LOGAN FISH HATCHERY" DATED MARCH 1, 2023 AND EXECUTED BY GSH GEOTECHNICAL, INC. HAS BEEN PREPARED FOR THE WORK HEREIN IDENTIFIED. THE NATURE AND EXTENT OF SUCH SITE OR SUBSURFACE VARIATIONS MAY NOT BECOME EVIDENT UNTIL CONSTRUCTION COMMENCES OR IS IN PROGRESS. IF SITE AND SUBSURFACE ANOMALIES OR VARIATIONS EXIST OR DEVELOP, GSH GEOTECHNICAL SHOULD BE CONTACTED IMMEDIATELY SO THAT SUCH SITUATIONS/CONDITIONS CAN BE EVALUATED AND ADDRESSED WITH APPLICABLE RECOMMENDATIONS. THE CONTRACTOR AND APPLICABLE SUBCONTRACTORS SHALL FAMILIARIZE THEMSELVES WITH THE REQUIREMENTS AND RECOMMENDATIONS CONTAINED IN THE REPORT.
2. CONTRACTOR SHALL PERFORM EARTHWORK AND GRADING ACTIVITIES IN ACCORDANCE WITH THE CONTRACT DOCUMENTS, APWA STANDARD SPECIFICATIONS, AND THE RECOMMENDED EARTHWORK SPECIFICATIONS FOUND IN THE REPORT OF THE GEOTECHNICAL INVESTIGATION STUDY COMPLETED BY GSH GEOTECHNICAL, INC. AS IT PERTAINS TO THE CONDITIONS OF THE EARTHWORK.
3. ALL EARTHWORK SHALL BE PLACED AND COMPACTED AS OUTLINED IN THE CONTRACT DOCUMENTS AND GEOTECHNICAL REPORT.
4. SOIL INVESTIGATIONS WERE CONDUCTED FOR DESIGN PURPOSES ONLY, AND THE DATA SHOWN IN THE REPORTS ARE FOR SUBSURFACE CONDITIONS FOUND AT THE TIME OF THE INVESTIGATION. THE OWNER AND ENGINEER DISCLAIM RESPONSIBILITY FOR THE INTERPRETATION BY THE CONTRACTOR OF DATA, SUCH AS PROJECTION OR EXTRAPOLATION, FROM THE TEST HOLES TO OTHER LOCATIONS ON THE SITE OF THE WORK, SOIL BEARING VALUES AND PROFILES, SOIL STABILITY AND THE PRESENCE, LEVEL AND EXTENT OF UNDERGROUND WATER FOR SUBSURFACE CONDITIONS DURING CONSTRUCTION OPERATIONS.

QUALITY ASSURANCE AND TESTING:

1. THE GEOTECHNICAL ENGINEER WILL PERFORM TESTS ON EARTH MATERIALS AT THE SITE TO DETERMINE IF SUCH MATERIALS ARE IN COMPLIANCE WITH THE RESPECTIVE SPECIFIED REQUIREMENTS. THE TYPE AND NUMBER OF TESTS SHALL BE PERFORMED BY THE ENGINEER AT LOCATIONS, DEPTHS AND FREQUENCY OF HIS CHOOSING.
2. ACCEPTANCE OF EARTH MATERIALS WILL BE MADE ONLY AFTER SUCH MATERIALS HAVE BEEN INCORPORATED INTO THE COMPLETED WORK. REJECTION OF SUCH MATERIALS BY THE GEOTECHNICAL ENGINEER CAN BE MADE IN THE BORROW AREAS, TRANSPORTATION VEHICLES, OR IN-PLACE IN THE COMPLETED WORK. THE CONTRACTOR SHALL COOPERATE WITH THE ENGINEER TO PROVIDE ACCESS TO THE WORK AREAS AS NEEDED FOR TESTING AND TO ENSURE THAT ONLY ACCEPTABLE MATERIALS WILL BE INCORPORATED INTO THE COMPLETED WORK.
3. UNACCEPTABLE WORK SHALL BE REWORKED UNTIL SATISFACTORY TESTS ARE OBTAINED OR SHALL BE REMOVED AND REPLACED TO MEET THE REQUIREMENT OF THIS SPECIFICATION.

UNTREATED BASE COURSE:

UNTREATED BASE COURSE MATERIAL SHALL BE DEPOSITED AND SPREAD IN A UNIFORM LAYER, WITHOUT SEGREGATION OF SIZE, WITH SUCH DEPTH THAT WHEN COMPACTED THE LAYER WILL HAVE THE THICKNESS REQUIRED FOR ITS INTENDED PURPOSE IN ACCORDANCE WITH APWA SPECIFICATIONS AND MEET REQUIREMENTS OF THE GSH GEOTECHNICAL REPORT. THE BASE SHALL BE COMPACTED TO NOT LESS THAN 96% MAXIMUM DRY DENSITY AS DETERMINED BY AASHTO T-180. SURFACES SHALL BE TRUE TO THE ESTABLISHED GRADE.

PORTLAND CEMENT CONCRETE PAVEMENT:

CONTRACTOR SHALL EXCAVATE, PREPARE, FORM, SET, AND PLACE PORTLAND CEMENT CONCRETE PAVEMENT TO A THICKNESS OF 5" (UNLESS OTHERWISE NOTED) IN ALL FLATWORK AREAS WHERE SHOWN. PORTLAND CEMENT CONCRETE PAVEMENT FOR ACCESS AND/OR DRIVES SHALL BE 8" THICK WITH #4 BAR AT 12" ON CENTER EACH WAY. CONTRACTOR SHALL FINISH AND APPLY A CURE-ALL COMPOUND, AND PROVIDE CONSTRUCTION JOINTS AND/OR CONTROL JOINTS IN ACCORDANCE WITH APWA STANDARDS AND SPECIFICATIONS. ALL CAST-IN-PLACE PORTLAND CEMENT CONCRETE SHALL BE 5-1/2 SACK MIX HAVING A MINIMUM 28-DAY COMPRESSIVE STRENGTH OF 4,000 PSI (4"±1 SLUMP, 5%±1 AIR ENTRAINMENT).

BITUMINOUS ASPHALT CEMENT PAVEMENT:

CONTRACTOR SHALL PLACE AND COMPACT A 3" THICK HOT-MIX ASPHALT SURFACE COURSE OVER THE FINISHED BASE COURSE MATERIAL WHERE SHOWN. CONTRACTOR SHALL PROVIDE DFCM WITH SPECIFIED AND SELECTED ASPHALT MIX DESIGNS, AND SELECTED PRIME COAT AND TACK COAT AT THE PRE-CONSTRUCTION MEETING. ALL HOT-MIX ASPHALT SHALL BE PG 58-28, DM-1/2, MARSHALL MIX PER APWA 32 12 05. APPLY TACK COAT, COMPLIANT WITH APWA SECTION 32 12 14, BETWEEN LAYERS OR LIFTS IF THE PREVIOUS PAVEMENT LAYER IS DIRTY OR OLDER THAN 24 HOURS PER APWA SECTION 32 12 16.

DUST CONTROL:

THE CONTRACTOR SHALL BE RESPONSIBLE TO PROVIDE DUST CONTROL, PAVEMENT CLEANING, AND SWEEPING OPERATIONS FOR THE DURATION OF THE PROJECT. DUST CONTROL AND PAVEMENT SWEEPING SHALL BE PROVIDED DAILY AT THE END OF EACH WORK DAY, UNLESS OTHERWISE APPROVED BY THE AGENCY. DUST CONTROL AND SWEEPING SHALL BE CONSIDERED INCIDENTAL TO THE WORK AND WILL NOT BE PAID UNDER A SEPARATE BID ITEM.

SITE RESTORATION AND FINALIZATION:

1. WHERE NEW EARTHWORK MEETS EXISTING EARTHWORK, CONTRACTOR SHALL BLEND NEW EARTHWORK SMOOTHLY INTO EXISTING, PROVIDING VERTICAL CURVES OR ROUNDS AT ALL TOP AND BOTTOM OF SLOPES.
2. WHERE A SPECIFIC LIMIT OF WORK LINE IS NOT OBVIOUS OR IMPLIED, CONTRACTOR SHALL BLEND GRADES TO MATCH AND MEET EXISTING CONDITIONS.
3. CONTRACTOR SHALL RESTORE ALL DISTURBED AREAS AND SHALL RAKE AND WORK SUCH DISTURBED AREAS IN ORDER TO FORM A SMOOTH AND AESTHETICALLY PLEASING FINISHED GRADE FREE FROM ROUGHNESS, BUMPS, RIDGES OR IRREGULARITIES.

DEWATERING:

IF REQUIRED FOR THE PERFORMANCE OF THE PROJECT WORK, THE CONTRACTOR SHALL MAINTAIN ALL NECESSARY SLOPES, DITCHES, SUBDRAINS, AND SHALL FURNISH AND OPERATE ALL PUMPS NEEDED SUCH THAT DEWATERING OF THE WORK AREAS CAN BE ACCOMPLISHED IN A MANNER THAT WILL PREVENT LOSS OF FINES FROM THE STRUCTURAL EARTHWORK, MAINTAIN STABILITY OF EXCAVATED SLOPES, AND ALLOW THE WORK TO BE PERFORMED. THE CONTRACTOR SHALL EMPLOY A PROPER METHOD OF DEWATERING.

"AS-BUILT" MARK UPS OF CONTRACT DRAWINGS

THE CONTRACTOR SHALL CONTINUOUSLY MARK UP A SET OF THE CONTRACT DRAWINGS BASED ON THE FIELD CHANGES AND AS-BUILT CONDITIONS. THE MARKED UP SET OF CONTRACT DRAWINGS SHALL BE AVAILABLE ON SITE AT ALL TIMES. THE CONTRACTOR SHALL BRING THE UPDATED SET TO EACH CONSTRUCTION MEETING. A COMPLETE SET OF MARKED UP CONTRACT DRAWINGS SHALL BE PROVIDED TO THE OWNER AND ENGINEER AT THE COMPLETION OF THE PROJECT.

AIR, SOIL, AND WATER POLLUTION AND NOISE CONTROL

1. THE CONTRACTOR SHALL COMPLY WITH THE APPLICABLE LOCAL, STATE, AND FEDERAL REGULATIONS PERTAINING TO OPEN BURNING, AND DUST, ODOR, CONSTRUCTION AND DEMOLITION; AND HIS/HER ATTENTION IS CALLED TO APPLICABLE ENFORCEMENT PROVISIONS IN REGARD TO THESE AND OTHER PERTINENT AND APPLICABLE REGULATIONS. THE CONTRACTOR SHALL COMPLY WITH THE PROVISIONS OF THE CLEAN AIR ACT OF 1970, 42USC, SECTIONS 1857- 1857F.
2. THE WORK OF THIS CONTRACT IS BEING CONDUCTED ADJACENT TO THE BIERDENOU SLOUGH AND ITS SURROUNDING WETLANDS AND IS A SENSITIVE WATER RESOURCE WHICH PROVIDES HABITAT FOR FISH AND OTHER WILDLIFE. THE CONTRACTOR SHALL TAKE EVERY PRECAUTION TO PREVENT THE CHEMICAL CONTAMINATION OF SOIL, GROUNDWATER, AND RIVER WATER CAUSED BY SPILLING OR LEAKING OF OIL, HAZARDOUS MATERIAL, OR OTHER CHEMICALS AND MATERIALS USED IN THE CONSTRUCTION OPERATION. THE CONTRACTOR SHALL BE ESPECIALLY CAREFUL NOT TO DISCHARGE OR SPILL ANY OIL, GROUT, CONCRETE, OR OTHER CONTAMINANTS IN OR ONTO THE WATERS ADJACENT TO AND/OR WITHIN WORK AREAS.
3. CLEAN-UP OF SUCH SPILLS, LEAKS OR OTHER CONTAMINATION SHALL BE UNDERTAKEN IMMEDIATELY BY THE CONTRACTOR. THE CLEAN-UP WORK SHALL BE DONE TO THE SATISFACTION OF THE ENGINEER AND OWNER. ALL SPILLS, LEAKS, OR OTHER CONTAMINATION SHALL BE IMMEDIATELY REPORTED TO BOTH THE ENGINEER AND OWNER. IN THE EVENT THAT SUCH A SPILL OR LEAK IS NOT CLEANED UP BY THE CONTRACTOR, THE OWNER RESERVES THE RIGHT TO HAVE THE SPILL OR LEAK CLEANED UP BY ITS OWN FORCES OR BY OTHERS AND THE EXPENSE OF SUCH REMOVAL AND DISPOSAL WILL BE CHARGED TO THE CONTRACTOR.

REVIEWED FOR CODE COMPLIANCE
Thomas W Peterson
12/14/2023
DIVISION OF FACILITIES CONSTRUCTION AND MANAGEMENT

DFCM CODE COMPLIANCE OFFICER

PUBLISHED			
NO.	REVISIONS	BY	DATE

This document or any part thereof in detail or design concept is the property of Forsgren Associates Inc. and shall not be copied without the written authorization of Forsgren Associates Inc.

DRAWN ______
DESIGNED ______
APPROVED ______
QA ______

ATTENTION
LINE IS 2-INCHES
AT 24"x36" SIZE
IF NOT 2-INCHES, SCALE DRAWING ACCORDINGLY

LICENSED PROFESSIONAL ENGINEER
ERIC E. DURSTELER
NO. 323794
10-4-23
STATE OF UTAH

LOGAN FISH HATCHERY
UTAH DIVISION OF WILDLIFE RESOURCES
1465 WEST 200 NORTH
LOGAN, UTAH 84321

UTAH DNR WILDLIFE RESOURCES

FORSGREN Associates Inc.
95 WEST 100 SOUTH, STE. 115, LOGAN, UT 84321
PH: 435.227.0333 FAX: 435.227.0334

Blue Stakes of UTAH 811
Bluestakes.org

WARM WATER AQUACULTURE BUILDING
LOGAN HATCHERY IMPROVEMENT PROJECT

GENERAL PROJECT CONSTRUCTION NOTES AND SPECIFICATIONS

PROJECT NO: 14-23-0005
SHEET NO: GNS-1
DATE: 10-4-2023
PAGE NO: 2

DIVISION OF FACILITIES CONSTRUCTION & MANAGEMENT

Office of the State Building Official
4315 S 2700 W Taylorsville, UT 84129
Phone: (801) 538-3018
Website: http://dfcm.utah.gov/

Special Inspection, Material Testing & Structural Observation
Items Required by Chapter 17 of the 2021 IBC

Indicate items requiring special inspection, structural testing, or structural observations by checking the appropriate box. All items not requiring inspection/testing should be removed from the form. For items requiring continuous inspection, a special inspector must be present onsite during the performance of that task. In most cases "periodic" inspections/tests shall be performed prior to commencing the task, intermittently during the task, and at the completion of the task. The "Detailed Instructions & Frequency" provides a description of the presumed requirements for tasks requiring "periodic" inspections. The design professional in responsible charge should revise the requirements as needed on a project-specific basis.

FABRICATORS (IBC 1704.2.5.1 & 1705.10)

☒ Approved Fabricator	Yes	No

Fabricators Name:	TBD
Fabricators plant location	
Required In-plant Inspections	☒ Steel Construction ☐ Concrete Construction ☐ Wood Construction ☐ Cold-formed Construction ☐ Other: _____ ☐ Other: _____

STRUCTURAL STEEL (IBC 1705.2.1, 1705.12.1 & 1705.13.1)

Item			*Detailed Instructions and Frequencies*
PRIOR TO WELDING (TABLE N5.4-1, AISC 360-16):			
Welder qualification records	☒ Observe	☐ Perform	Verify welder qualification records and continuity records.
Welding procedures (WPS) and consumable certificates	☐ Observe	☒ Perform	
Material identification	☒ Observe	☐ Perform	Verify type and grade of material.
Welder identification	☒ Observe	☐ Perform	Confirm a system is in place by which a welder who has welded a joint or member can be identified.
Fit-up groove welds	☒ Observe	☐ Perform	Verify joint preparation, dimensions, cleanliness, tacking, and backing.
Fit-up of CJP welds to HSS T-, Y- and K- joints without backing	☒ Observe	☐ Perform	Verify joint preparation, dimensions, cleanliness and tacking.
Access holes	☒ Observe	☐ Perform	Verify configuration and finish.
Fit-up of fillet welds	☒ Observe	☐ Perform	Verify dimensions, cleanliness and tacking.
DURING WELDING (TABLE N5.4-2, AISC 360-16):			
Control and handling of welding consumables	☒ Observe	☐ Perform	Verify packaging and exposure control.
Cracked tack welds	☒ Observe	☐ Perform	Verify that welding does not occur over cracked tack welds.
Environmental conditions	☒ Observe	☐ Perform	Verify wind speed is within limits as well as precipitation and temperature.
WPS followed	☒ Observe	☐ Perform	Verify items such as settings on welding equipment, travel speed, welding materials, shielding gas type/flow rate, preheat applied, interpass temperature maintained, and proper position.

Welding techniques	☒ Observe	☐ Perform	Verify interpass and final cleaning, each pass is within profile limitations, and quality of each pass.
Headed stud anchors	☐ Observe	☒ Perform	Verify placement and installation of head stud anchors.
AFTER WELDING (TABLE N5.4-3, AISC 360-16):			
Welds cleaned	☒ Observe	☐ Perform	Verify that welds have been properly cleaned.
Size, length, and location of welds	☐ Observe	☒ Perform	Verify the size, length and location of welds.
Welds meet visual acceptance criteria	☐ Observe	☒ Perform	Verify that welds meet crack prohibition, base metal fusion, profile, size, undercut, and porosity provisions.
Arc strikes	☐ Observe	☒ Perform	Verify that arc strikes do not exist outside the permanent weld areas.
k-area	☐ Observe	☒ Perform	When welding of doubler plates, continuity plates or stiffeners has been performed in the k-area, visually inspect the web k-area for cracks.
Backing & weld tabs removed	☐ Observe	☒ Perform	If required on the approved construction documents, verify that back and weld tabs are removed.
Repair activities	☐ Observe	☒ Perform	Verify that repair activities are performed in accordance with AISC 360 and AWS D1.1.
Documentation	☐ Observe	☒ Perform	Document the acceptance or rejection of the welded joint or member.
Prohibited welds	☒ Observe	☐ Perform	Verify that no prohibited welds have been added with the approval of the engineer of record.
NONDESTRUCTIVE TESTING (SECTION N5, AISC 360-16):			
CJP welds (Risk Cat. II)	☐ Observe	☒ Perform	UT testing shall be performed on 10% of CJP groove welds in butt, T- and corner joints subject to transversely applied tension loading in materials 5/16-inch thick or greater. (This must be performed on 100% of CJP welds in SDC 'D-F' per AISC 341.)
CJP welds (Risk Cat. III or IV)	☐ Observe	☒ Perform	UT testing shall be performed on all CJP groove welds in butt, T- and corner joints subject to transversely applied tension loading in materials 5/16-inch thick or greater.
Welded joints subject to fatigue	☐ Observe	☒ Perform	Welded joints subject to fatigue (see Table A-3.1 of AISC 360) shall have radiographic or UT testing.
PRIOR TO BOLTING (TABLE N5.6-1, AISC 360-16): ➢ *Not required if only snug-tight joints are specified [per Section N5.6(1) of AISC 360-16].*			
Certifications of fasteners	☐ Observe	☒ Perform	Verify that manufacturer's certificates are available for fastener materials.
Fasteners marked	☒ Observe	☐ Perform	Verify that fasteners have been marked in accordance with ASTM requirements.
Proper fasteners for joint	☒ Observe	☐ Perform	Verify grade, type, and bolt length if threads are excluded from the shear plane.
Proper bolting procedure	☒ Observe	☐ Perform	Verify proper procedure is used for the joint detail.
Connecting elements	☒ Observe	☐ Perform	Verify appropriate faying surface condition and hole preparation, if specified, meet requirements.
Pre-installation verification testing	☒ Observe	☐ Perform	Observe and document verification testing by installation personnel for fastener assemblies and methods used.
Proper storage	☒ Observe	☐ Perform	Verify proper storage of bolts, nuts, washers, and other fastener components.

DURING BOLTING (TABLE N5.6-2, AISC 360-16): ➢ *Not required if only snug-tight joints are specified [per Section N5.6(1) of AISC 360-16].* ➢ *Not required for pretensioned joints using turn-of-the-nut method with match-marking, direct-tension-indicators, or twist-off type tension control method [per Section N5.6(2) of AISC 360-16].*			
Fastener assemblies	☒ Observe	☐ Perform	Verify that fastener assemblies are of suitable condition, paced in all holes, and washers are positioned as required.
Snug-tight prior to pretensioning	☒ Observe	☐ Perform	Verify that joints are brought to snug-tight condition prior to pretensioning operation.
Fastener component	☒ Observe	☐ Perform	Verify that fastener component is not turned by wrench prevented from rotating.
Pretensioned fasteners	☒ Observe	☐ Perform	Verify that fasteners are Pretensioned in accordance with RCSC Specification, progressing systematically from the most rigid point toward the free edges.
AFTER BOLTING (TABLE N5.6-3, AISC 360-16):			
Documentation	☐ Observe	☒ Perform	Document the acceptance or rejection of bolted connections.
OTHER STEEL INSPECTIONS (SECTION N5.7 & N5.8, AISC 360-16; Tables J8.1 & J10.1, AISC 341-16):			
Galvanized structural steel	☒ Observe	☐ Perform	Verify that exposed cut surfaces of galvanized structural steel does not include cracks prior to galvanizing the surface.
Structural steel details	☒ Observe	☐ Perform	All fabricated steel or steel frames shall be inspected to verify compliance with the details shown in the approved construction documents, such as braces, stiffeners, member locations, and proper application of joint details at each connection.
Anchor rods and other embedments supporting structural steel	☒ Observe	☐ Perform	Shall be on the premises during the placement of anchor rods and other embedments supporting structural steel for compliance with construction documents. Verify the diameter, grade, type, and length of the anchor rod or embedded item, and the extent or depth of embedment prior to placement of concrete.
Reduced beam sections (RBS)	☐ Observe	☒ Perform	Verify contour and finish as well as dimensional tolerances *(see Table J8.1 of AISC 341-16).*
Protected zones	☐ Observe	☒ Perform	Verify that no holes or unapproved attachments are made within the protected zone *(see Table J8.1 of AISC 341-16).*
STEEL ROOF AND FLOOR DECKS (IBC 1705.2.2 and SDI QA/QC - 2017):			
Prior to metal deck attachment	☐ Observe	☒ Perform	Verify and document compliance of materials (deck and all deck accessories) with approved construction documents, including profiles, material properties, and base metal thickness.
After metal deck placement	☐ Observe	☒ Perform	Verify and document compliance of deck, and deck accessories, installation with the approved construction documents. Verify that mill certificates comply with approved construction documents.
Prior to welding	☒ Observe	☐ Perform	Verify that welding procedures and certifications of consumables are available, material is properly identified, and welding equipment is appropriate.
During welding	☒ Observe	☐ Perform	Verify that welders are qualified, proper handling of consumables is provided, that environmental

			conditions are acceptable and WPS is followed.
After welding	☐ Observe	☒ Perform	Verify size, location and appearance of welds. Verify that repair activities are acceptable.
Prior to mechanical fastening	☒ Observe	☐ Perform	Verify that manufacturer's installation instructions and tools are available. Verify proper storage of fasteners.
During mechanical fastening	☒ Observe	☐ Perform	Verify that fasteners are positioned appropriately and installed per manufacturer's instructions.
After mechanical fastening	☐ Continuous	☒ Periodic	Verify spacing and type of all fasteners. Verify that repair activities are acceptable.
OPEN-WEB STEEL JOISTS AND JOIST GIRDERS (IBC TABLE 1705.2.3):			
End connections – welded or bolted	☐ Continuous	☒ Periodic	Visual inspection to confirm that end connections conform to the approved construction documents.
Bridging – horizontal or diagonal	☐ Continuous	☒ Periodic	Visual inspection to confirm that bridging is provided per the approved construction documents.
COLD-FORMED STEEL CONSTRUCTION (IBC 1705.2.4, 1705.11.2, 1705.12.3, and 1705.12.9):			
Wind-force-resisting systems or seismic-force-resisting systems	☐ Continuous	☒ Periodic	Periodic inspections of welding operations. If fastener spacing is < 4"o.c.: Verify that proper screw attachment, bolting, anchoring and other fastening of shear walls, diaphragms, drag struts, braces, shear panels and holdowns has occurred. ***Performed by code inspection firm.***

CONCRETE CONSTRUCTION (IBC 1705.3 & 1705.12.1)

Item			*Detailed Instructions and Frequencies*
Reinforcing steel, including prestressing tendons	☐ Continuous	☒ Periodic	Verify prior to placing concrete that reinforcing is of specified type, grade and size; that it is free of oil, dirt and rust; that it is located and spaced properly; that hooks, bends, ties, stirrups and supplemental reinforcement are placed correctly; that lap lengths, stagger and offsets are provided; and that all mechanical connections are installed per the manufacturer's instructions and/or evaluation report.
Welding of reinforcing steel	☐ Continuous	☒ Periodic	Visually inspect all welds and also verify weldability of reinforcing steel based upon carbon equivalent and in accordance with AWS D1.4. Continuously inspect any welds over 5/16" thick.
Cast-in bolts & embeds	☐ Continuous	☒ Periodic	Inspection of anchors or embeds cast in concrete is required when allowable loads have been increased or where strength design is used.
Post-installed anchors or dowels	☐ Continuous	☒ Periodic	All post-installed anchors/dowels shall be specially inspected as required by the approved ICC-ES report. Horizontally or upwardly inclined anchors that resist sustained tension loads require continuous inspection and approved installers.
Use of required mix design	☐ Continuous	☒ Periodic	Verify that all mixes used comply with the approved construction documents; ACI 318: Ch. 19, 26.4.3, 26.4.4; and IBC 1904.1, 1904.2.
Concrete sampling for strength tests, slump, air content, and temperature	☒ Continuous	☐ Periodic	

Concrete & shotcrete placement	☒ Continuous	☐ Periodic	
Curing temperature and techniques	☐ Continuous	☒ Periodic	Verify that the ambient temperature for concrete is kept at > 50°F for at least 7 days after placement. High-early-strength concrete shall be kept at > 50°F for at least 3 days. Accelerated curing methods may be used (see ACI 318: 26.5.3-26.5.5). The ambient temperature for shotcrete shall be > 40°F for the same period of time as noted for concrete. Shotcrete shall be kept continuously moist for at least 24 hours after shotcreting. All concrete materials, reinforcement, forms, fillers, and ground shall be free from frost. In hot weather conditions ensure that appropriate measures are taken to avoid plastic shrinkage cracking and that the specified water/cement ratio is not exceeded.
Pre-stressed concrete	☒ Continuous	☐ Periodic	ACI 318 26.10
Erection of precast concrete	☐ Continuous	☒ Periodic	Verify that all precast elements are lifted, assembled and braced in accordance with the approved construction documents.
Precast concrete diaphragm connections or reinforcement classified as moderate or high deformability elements in seismic design category C-F.	☒ Continuous	☐ Periodic	Inspect connections and reinforcement in the field for: a. Installation of the embedded parts b. Completion of the continuity of reinforcement across joints. c. Completion of connections in the field.
Installation tolerances of precast concrete diaphragm connections	☐ Continuous	☒ Periodic	
Strength verification	☐ Continuous	☒ Periodic	Verify that adequate strength has been achieved prior to the removal of shores and forms or the stressing of post-tensioned tendons.
Formwork	☐ Continuous	☒ Periodic	Verify that the forms are placed plumb and conform to the shapes, lines, and dimensions of the members as required by the approved construction documents.

SOILS CONSTRUCTION (IBC 1705.6)

Item			*Detailed Instructions and Frequencies*
Verify subgrade is adequate to achieve design bearing capacity	☐ Continuous	☒ Periodic	Prior to placement of concrete.
Verify excavations extend to proper depth and material	☐ Continuous	☒ Periodic	Prior to placement of compacted fill or concrete.
Verify that subgrade has been appropriately prepared prior to placing compacted fill	☐ Continuous	☒ Periodic	Prior to placement of compacted fill.
Perform classification and testing of compacted fill materials	☐ Continuous	☒ Periodic	All materials shall be checked at each lift for proper classifications and gradations not less than once for each 10,000ft² of surface area.
Verify proper materials, densities and lift thicknesses during placement and compaction.	☒ Continuous	☐ Periodic	Verify use of proper materials and procedures in accordance with the geotechnical report. Verify densities and lift thicknesses during placement and compaction of compacted fill.

MECHANICAL & ELECTRICAL COMPONENTS (IBC 1705.13.6)

➢ *Only required for buildings located within Seismic Design Category C, D, E, or F.*

Item			*Detailed Instructions and Frequencies*
Anchorage of emergency or standby power systems	☐ Continuous	☒ Periodic	Verify that anchorage complies with approved construction documents.
Installation of piping systems carrying flammable, combustible or highly toxic materials	☐ Continuous	☒ Periodic	Verify that installation and restraint comply with approved construction documents.
Installation of vibration isolation systems having a clearance of ≤¼"	☐ Continuous	☒ Periodic	Verify that installation complies with approved construction documents and manufacturer's recommendations. .
Designated seismic systems	☐ Continuous	☒ Periodic	Verify seismic qualification per Section 13.2.2 of ASCE 7. Verify that the label, anchorage or mounting conforms to the manufacturer's certificate of compliance.

MISCELLANEOUS AREAS

➢ *These inspections may be recommended by the Architect/Engineer and are to be approved by DFCM.*

Item			*Detailed Instructions and Frequencies*
Soil backfill (specify locations and frequency)	☐ Continuous	☒ Periodic	Perform classification and testing of compacted fill materials. Verify proper materials, densities and lift thicknesses during placement and compaction. See Soils Construction Section
Soils for parking lots (specify locations and frequency)	☐ Continuous	☒ Periodic	Perform classification and testing of compacted fill materials. Verify proper materials, densities and lift thicknesses during placement and compaction. See Soils Construction Section
Soils for utility trench backfill	☐ Continuous	☒ Periodic	Perform classification and testing of compacted fill materials. Verify proper materials, densities and lift thicknesses during placement and compaction. See Soils Construction Section
Reinforcement for slab on grade sidewalks and drive approaches (specify locations and frequency)	☐ Continuous	☒ Periodic	See special inspection requirements on S002
Reinforcement for interior slab on grade (specify locations and frequency)	☐ Continuous	☒ Periodic	See special inspection requirements on S002
Concrete testing for slab on grade sidewalks and drive approaches (specify locations and frequency)	☐ Continuous	☒ Periodic	See special inspection requirements on S002
Concrete testing for interior slab on grade (specify locations and frequency)	☐ Continuous	☒ Periodic	See special inspection requirements on S002
Asphalt testing (specify locations and frequency)	☐ Continuous	☒ Periodic	Provide compaction testing on site during construction.

Steam and water line welding (specify locations and frequency)	☐ Continuous	☒ Periodic	Visual inspection of welded components.
Seismic supports for electrical raceways, cable trays and lights	☐ Continuous	☒ Periodic	Visual inspection of seismic supports to match construction documents.
Seismic supports for plumbing lines including gas, water and steam and condensation	☐ Continuous	☒ Periodic	Visual inspection of seismic supports to match construction documents.
Seismic bracing for mechanical units both on slab and suspended	☐ Continuous	☒ Periodic	Visual inspection of seismic supports to match construction documents.

Special Inspectors Shall:

- Be approved by the Building Official prior to performing any duties;
- Provide proof of licensure as a special inspector by the State of Utah for each type of inspection;
- Inspection reports are to meet the requirements of IBC 1704.2.4 and DFCM standards;
- Inspection reports are to be submitted to the code consultant, architect, DFCM project manager, and the State of Utah Building Official within 48 hours of performing inspections;
- A final inspection report shall be submitted following completion of the project documenting the types of special inspections performed and a statement indicating that the structure is in compliance with the approved construction documents and applicable codes (see IBC 1704.2.4).

CONTRACTOR'S STATEMENT OF RESPONSIBILITY (IBC 1704.4)

The following statement must be provided on the plans along with a signature from the contractor prior to permit issuance.

Each contractor involved with the construction of wind or seismic force-resisting systems shall comply with the requirements of IBC 1704.4. The contractor is responsible for providing the special inspector access to approved plans and contract documents at the job site. All special inspection records shall be retained at the job site by the contractor and shall be made available to the Building Department upon request.

Declaration by General Contractor

I, the General Contractor of the project, agree to comply with the "Contractor Responsibility" items noted above.

_____ _____
Signature Date

STRUCTURAL OBSERVATIONS (IBC 1704.6)

Item		*Proposed Frequency*	*Name of Structural Observer*
Footings & Piers	☒ Required	Contact structural observer near the completion of forming and reinforcing but before concrete is poured.	Ben Maughan
Mat Foundations	☒ Required	Contact structural observer near the completion of forming and reinforcing but before concrete is poured.	Ben Maughan
Grade Beams	☒ Required	Contact structural observer near the completion of forming and reinforcing but before concrete is poured.	Ben Maughan
Concrete Walls including Sump Walls	☒ Required	Contact structural observer near the completion of forming and reinforcing but before concrete is poured.	Ben Maughan

Structural Observer's Shall:

- Provide proof of licensure as a licensed professional/structural engineer by the State of Utah;
- If structural observations are performed by individuals other than the design professional in responsible charge, they should first be approved by the Building Official.
- At the conclusion of work a final structural observation report must be submitted to the Building Official noting any deficiencies which, to the best of the structural observer's knowledge, have not been resolved (see IBC 1704.6).

Last Revised: 8/2023

REVIEWED FOR CODE COMPLIANCE
Thomas W Peterson
12/14/2023
DIVISION OF FACILITIES CONSTRUCTION AND MANAGEMENT

DFCM CODE COMPLIANCE OFFICER

NO.	REVISIONS	BY	DATE
	PUBLISHED		
2	DFCM CODE REVIEW COMMENTS 11/17/2023		

This document or any part thereof in detail or design concept is the property of Forsgren Associates Inc. and shall not be copied without the written authorization of Forsgren Associates Inc.

DRAWN _____
DESIGNED _____
APPROVED _____
QA _____

ATTENTION
LINE IS 2-INCHES
AT 24"x36" SIZE
IF NOT 2-INCHES,
SCALE DRAWING ACCORDINGLY

ERIC E. DURSTELER NO. 323794 10-4-23 STATE OF UTAH PROFESSIONAL ENGINEER

LOGAN FISH HATCHERY
UTAH DIVISION OF WILDLIFE RESOURCES
1465 WEST 200 NORTH
LOGAN, UTAH 84321

UTAH DNR WILDLIFE RESOURCES

FORSGREN Associates Inc.
95 WEST 100 SOUTH, STE. 115, LOGAN, UT 84321
PH: 435.227.0333 FAX: 435.227.0334

Blue Stakes of UTAH 811 Bluestakes.org

WARM WATER AQUACULTURE BUILDING
LOGAN HATCHERY IMPROVEMENT PROJECT
GENERAL PROJECT CONSTRUCTION
DFCM SPECIAL INSPECTION FORMS

PROJECT NO: 14-23-0005
SHEET NO: SIF-1
DATE: 10-4-2023
PAGE NO: 3

HIGH WATER ELEVATION: 4433.35

FEMA SFHA ZONE A BOUNDARY

PRESERVE AND PROTECT EXISTING "LAKOS" SAND SEPARATORS

CONSTRUCT 315'± OF OXYGEN SUPPLY LINE FROM BULK TANK

"WEST-SIDE" DISCHARGE/RUNOFF MANAGEMENT SYSTEM (CONSTRUCTED UNDER SEPARATE WORK CONTRACT 10/2023)

EXISTING RECIRCULATION AQUACULTURE SYSTEMS FACILITY

OCC: F-2 CONST: IIB

OCC: F-2 CONST: VB

WARM WATER AQUACULTURE BUILDING

OCC: F-2 CONST: VB

CONSTRUCT WARM WATER AQUACULTURE BUILDING

CONSTRUCT DRIVEWAY/ACCESS PORTLAND CEMENT CONCRETE PAVEMENT

CONSTRUCT BULK WATER DISPENSING STATION (TRUCK FILL)

CONSTRUCT "EAST-SIDE" DISCHARGE/RUNOFF MANAGEMENT SYSTEM

OCC: F-2 CONST: IIB

PRESERVE AND PROTECT EXISTING WELLHEAD #8

RELOCATE EXISTING FIRE HYDRANT

CONSTRUCT ASPHALT PAVEMENT DRIVEWAY

INSTALL PRIMARY POWER UTILITY GROUND SLEEVE, TRANSFORMER PAD AND BOLLARDS

CONSTRUCT EXTENDED-STAY SITES w/ UTILITY PAD & SERVICE CONNECTIONS

CONSTRUCT GRAVEL ACCESS/PARKING AREA

ADMIN & LAB BUILDING

"WEST" RACEWAYS

"EAST" RACEWAYS

SMALL RACEWAYS

HATCHERY BUILDING

GARAGE

CARE TAKER

SHOP

BUNK HOUSE

CONSTRUCT PRESSURE SUSTAINING/PRESSURE REDUCING VALVE, VAULT, AND CONNECTION TO COLD WATER DISTRIBUTION SYSTEM

CONSTRUCT FLOW METERING AND FLOW MIXING CONTROL COMPONENTS AND VAULT

CONSTRUCT AND/OR INSTALL ILS50 "HYPERFUSION" DEGASSING UNIT AND APPURTENANT ASSEMBLIES IN HATCHERY BUILDING

#1 #2 #3 #4 #5 #6 #8 #13 #14 #16 #18 #19 #20 #21 #22 #23

33.7' 31.5' 32.5' 45' 24' 70' 180' 16' 24'

SD-12 02

N

0 15' 30' 60'

SCALE: 1" = 30'

GENERAL LEGEND

4441	PROPOSED CONTOUR (1')
-4440-	EXISTING CONTOUR MAJOR (5')
4441	EXISTING CONTOUR MINOR (1')
W	EXISTING COLD AND WARM WATER LINE
SD-12	NEW 12"ø STORM DRAIN PIPELINE
UGE	NEW UNDERGROUND ELECTRIC/POWER LINE
W 1	NEW WATER SERVICE/MAIN LINE
S 4	NEW SEWER SERVICE LINE
LPG	NEW LIQUID PROPANE GAS LINE
W	WELLHEAD
02	OXYGEN SUPPLY LINE
TOC	TOP OF CONCRETE
TOA	TOP OF ASPHALT
FG	FINISHED GRADE
NG	NATURAL GRADE
PC	POINT OF CURVATURE
PT	POINT OF TANGENCY
	NEW CONCRETE WALKWAY/SURFACE
	NEW HMA PAVEMENT SURFACE
	STORMWATER CATCH BASINS
	SLOPE ARROW
	FIRE HYDRANT
#18	WELLHEAD POINT NUMBER

REVIEWED FOR CODE COMPLIANCE
Thomas W Peterson
12/14/2023
DIVISION OF FACILITIES CONSTRUCTION AND MANAGEMENT

DFCM CODE COMPLIANCE OFFICER

PUBLISHED

NO.	REVISIONS	BY	DATE
1	DFCM CODE REVIEW COMMENTS 11/17/2023		
2	LOGAN CITY FEMA FLOODPLAIN REVIEW COMMENTS & RECOMENDATIONS 12/4/2023		

This document or any part thereof in detail or design concept is the property of Forsgren Associates Inc. and shall not be copied without the written authorization of Forsgren Associates Inc.

DRAWN
DESIGNED
APPROVED
QA

ATTENTION
LINE IS 2-INCHES AT 24"x36" SIZE
IF NOT 2-INCHES, SCALE DRAWING ACCORDINGLY

LICENSED PROFESSIONAL ENGINEER ERIC E. DURSTELER NO. 323794 10-4-23 STATE OF UTAH

LOGAN FISH HATCHERY
UTAH DIVISION OF WILDLIFE RESOURCES
1465 WEST 200 NORTH
LOGAN, UTAH 84321

UTAH DNR WILDLIFE RESOURCES

FORSGREN Associates Inc.
95 WEST 100 SOUTH, STE. 115, LOGAN, UT 84321
PH: 435.227.0333 FAX: 435.227.0334

Blue Stakes of UTAH 811 bluestakes.org

WARM WATER AQUACULTURE BUILDING
LOGAN HATCHERY IMPROVEMENT PROJECT

GENERAL PROJECT PLAN

PROJECT NO: 14-23-0005
SHEET NO: GPP-1
DATE: 10-4-2023
PAGE NO: 4

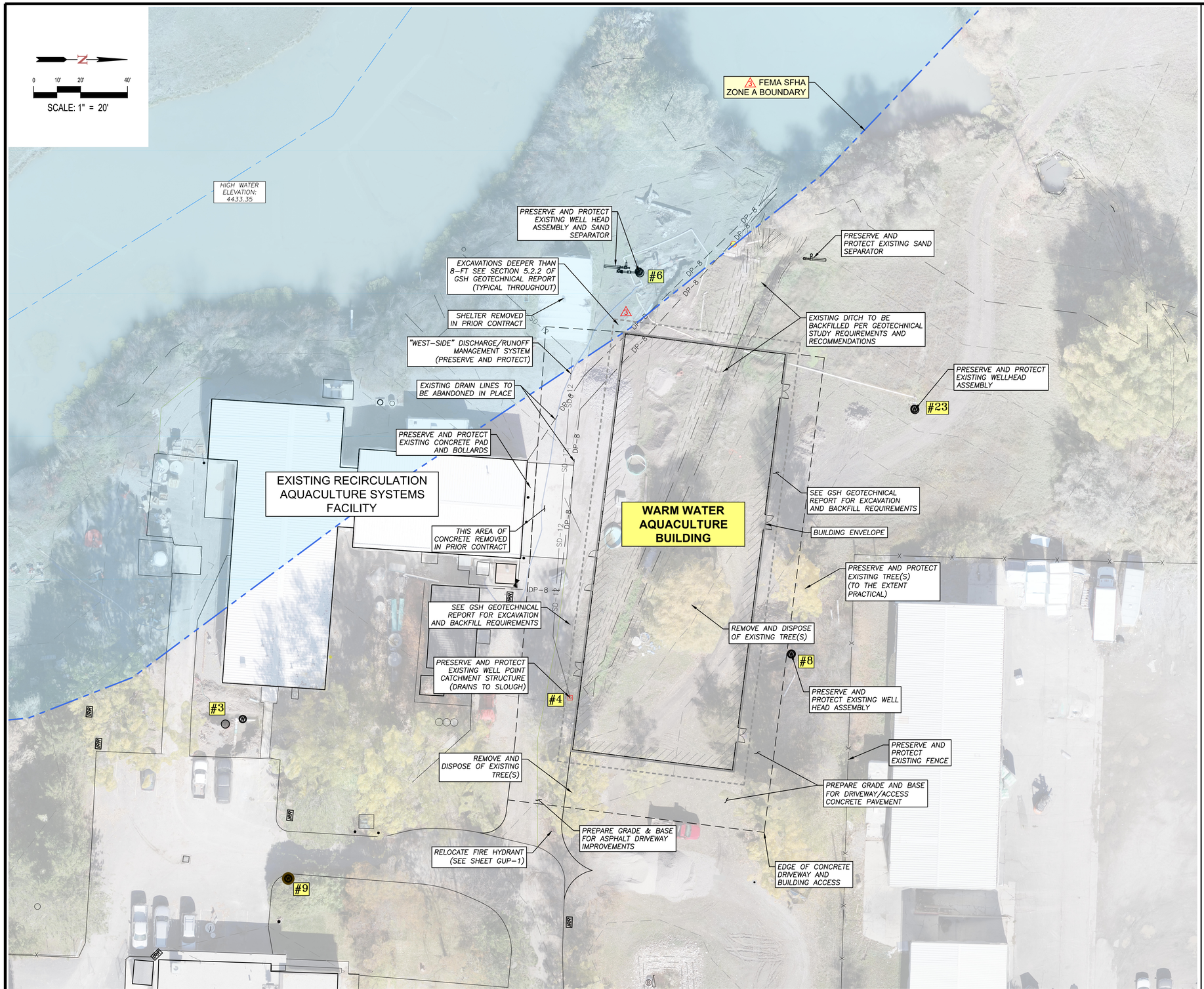

SITE PREPARATION AND CONSTRUCTION NOTES:

1. THIS PROJECT INVOLVES RENOVATION OF AND/OR INTERFACING WITH EXISTING FACILITIES. ALL REPRESENTATIONS OF EXISTING CONDITIONS SHOWN HEREIN WERE DERIVED FROM TOPOGRAPHIC SURVEYS, FIELD INVESTIGATIONS AND/OR FROM AVAILABLE RECORD DRAWING INFORMATION. NEITHER THE OWNER NOR ENGINEER GUARANTEES THESE LOCATIONS TO BE EITHER TRUE OR EXACT. IT SHALL BE THE CONTRACTOR'S SOLE RESPONSIBILITY TO VERIFY ALL EXISTING IMPROVEMENTS AND TO EXPOSE ALL EXISTING UNDERGROUND UTILITIES TO THE EXTENT NECESSARY IN ORDER TO DULY EXECUTE THE WORK.
2. A GEOTECHNICAL REPORT ENTITLED, "GEOTECHNICAL STUDY, PROPOSED LOGAN FISH HATCHERY" DATED MARCH 1, 2023 AND EXECUTED BY GSH GEOTECHNICAL, INC. HAS BEEN PREPARED FOR THE WORK HEREIN IDENTIFIED. THE NATURE AND EXTENT OF SUCH SITE OR SUBSURFACE VARIATIONS MAY NOT BECOME EVIDENT UNTIL CONSTRUCTION COMMENCES OR IS IN PROGRESS. IF SITE AND SUBSURFACE ANOMALIES OR VARIATIONS EXIST OR DEVELOP, GSH GEOTECHNICAL SHOULD BE CONTACTED IMMEDIATELY SO THAT SUCH SITUATIONS/CONDITIONS CAN BE EVALUATED AND ADDRESSED WITH APPLICABLE RECOMMENDATIONS. THE CONTRACTOR AND APPLICABLE SUBCONTRACTORS SHALL FAMILIARIZE THEMSELVES WITH THE REQUIREMENTS AND RECOMMENDATIONS CONTAINED IN THE REPORT.
3. TREES DESIGNATED FOR REMOVAL SHALL BE TAGGED BY CONTRACTOR AND APPROVED BY OWNER'S REPRESENTATIVE PRIOR TO COMMENCEMENT OF CONSTRUCTION.
4. DURING EARTHWORK OPERATIONS, CONTRACTOR SHALL TAKE CARE TO NOT DISTURB EXISTING MATERIALS TO REMAIN, OUTSIDE THE LIMITS OF EXCAVATION AND BACKFILL AND SHALL TAKE WHATEVER MEASURES NECESSARY, AT THE CONTRACTOR'S EXPENSE, TO PREVENT ANY EXCAVATED MATERIAL FROM COLLAPSING.
5. REMOVE ALL EXISTING SURFACE VEGETATION AND SOFT SOILS. STABILIZE AND FILL WITH SUITABLE STRUCTURAL FILL IN ACCORDANCE WITH GEOTECHNICAL REPORT.
6. THE FOOTINGS SHALL NOT BE INSTALLED UPON NON-ENGINEERED FILLS, LOOSE OR DISTURBED SOILS, TOPSOIL, SURFACE VEGETATION, ROOT SYSTEMS, RUBBISH, CONSTRUCTION DEBRIS, OR OTHER DELETERIOUS MATERIALS. IF UNSUITABLE SOILS ARE ENCOUNTERED, THEY MUST BE REMOVED AND REPLACED WITH COMPACTED GRANULAR FILL. IF GRANULAR SOILS BECOME LOOSE OR DISTURBED, THEY MUST BE RECOMPACTED PRIOR TO POURING THE CONCRETE.
7. ALL PROPOSED SITE FEATURES SHALL BE LAID OUT AND STAKED FOR REVIEW AND APPROVAL BY THE OWNER'S REPRESENTATIVE PRIOR TO COMMENCEMENT OF INSTALLATION. ANY REQUIRED ADJUSTMENTS TO THE LAYOUT SHALL BE UNDERTAKEN AS DIRECTED, AT NO ADDITIONAL COST TO THE OWNER.
8. CONTRACTOR SHALL PLACE SURVEY HUBS NEAR PROPOSED BUILDING TO MARK FINISHED FLOOR ELEVATION FOR USE IN DETERMINING REQUIRED BURY DEPTH FOR UTILITY PIPING, AND TO ESTABLISH BUILDING CORNERS TO ENSURE PROPER UTILITY PIPING INSTALLATION.
9. THE CONTRACTOR SHALL VERIFY ALL DIMENSIONS AND GRADES ON THE GROUND AND REPORT ANY DISCREPANCIES IMMEDIATELY TO THE ENGINEER.
10. NO CONSTRUCTION WILL BE PERFORMED WITHOUT THE PROPOSED CONSTRUCTION BASELINES AND LAYOUTS BEING STAKED IN THE FIELD AND THE SAME BEING APPROVED BY OWNER AND ENGINEER.
11. GSH GEOTECHNICAL, INC. MUST BE NOTIFIED PRIOR TO THE PLACEMENT OF STRUCTURAL SITE GRADING FILLS, FLOOR SLABS, FOOTINGS, AND PAVEMENTS TO VERIFY THAT ALL LOOSE/DISTURBED SOILS AND NON-ENGINEERED FILLS HAVE BEEN COMPLETELY REMOVED AND/OR PROPERLY PREPARED (SEE GSH GEOTECHNICAL REPORT).
12. IF EXCESSIVELY SOFT OR OTHERWISE UNSUITABLE SOILS ARE ENCOUNTERED BENEATH THE PROPOSED FOOTINGS, THEY SHALL BE COMPLETELY REMOVED. IF THE REMOVAL DEPTH REQUIRED IS GREATER THAN 2 FEET BELOW PROPOSED FOOTINGS, GSH GEOTECHNICAL MUST BE NOTIFIED TO PROVIDE FURTHER RECOMMENDATIONS. IN PAVEMENT, FLOOR SLAB, AND OUTSIDE FLATWORK AREAS, UNSUITABLE NATURAL SOILS SHOULD BE REMOVED TO A MAXIMUM DEPTH OF 2 FEET AND REPLACED WITH COMPACTED GRANULAR STRUCTURAL FILL (SEE GSH GEOTECHNICAL REPORT).
13. ALL BACKFILL MATERIALS SHALL BE PLACED AND COMPACTED AS SPECIFIED TO THE SUBGRADE REQUIRED FOR THE INSTALLATION OF THE REMAINDER OF THE CONTRACT WORK.
14. ALL PROPOSED PAVEMENTS SHALL MEET THE LINE AND GRADE OF EXISTING ADJACENT PAVEMENT SURFACES.

REVIEWED FOR CODE COMPLIANCE
Thomas W Peterson
12/14/2023
DIVISION OF FACILITIES CONSTRUCTION AND MANAGEMENT
DFCM CODE COMPLIANCE OFFICER

NO.	REVISIONS	BY	DATE
	PUBLISHED		
3	LOGAN CITY FEMA FLOODPLAIN REVIEW COMMENTS & RECOMENDATIONS 12/4/2023		

This document or any part thereof in detail or design concept is the property of Forsgren Associates Inc. and shall not be copied without the written authorization of Forsgren Associates Inc.

DRAWN
DESIGNED
APPROVED
QA

ATTENTION
LINE IS 2-INCHES
AT 24"x36" SIZE
IF NOT 2-INCHES, SCALE DRAWING ACCORDINGLY

LICENSED PROFESSIONAL ENGINEER
ERIC E. DURSTELER
NO. 323794
10-4-23
STATE OF UTAH

LOGAN FISH HATCHERY
UTAH DIVISION OF WILDLIFE RESOURCES
1465 WEST 200 NORTH
LOGAN, UTAH 84321

UTAH DNR WILDLIFE RESOURCES

FORSGREN Associates Inc.
95 WEST 100 SOUTH, STE. 115, LOGAN, UT 84321
PH: 435.227.0333 FAX: 435.227.0334

Blue Stakes of UTAH 811 bluestakes.org

WARM WATER AQUACULTURE BUILDING
LOGAN HATCHERY IMPROVEMENT PROJECT

SITE PREPARATION PLAN

PROJECT NO: 14-23-0005
SHEET NO: SPP-1
DATE: 10-4-2023
PAGE NO: 5

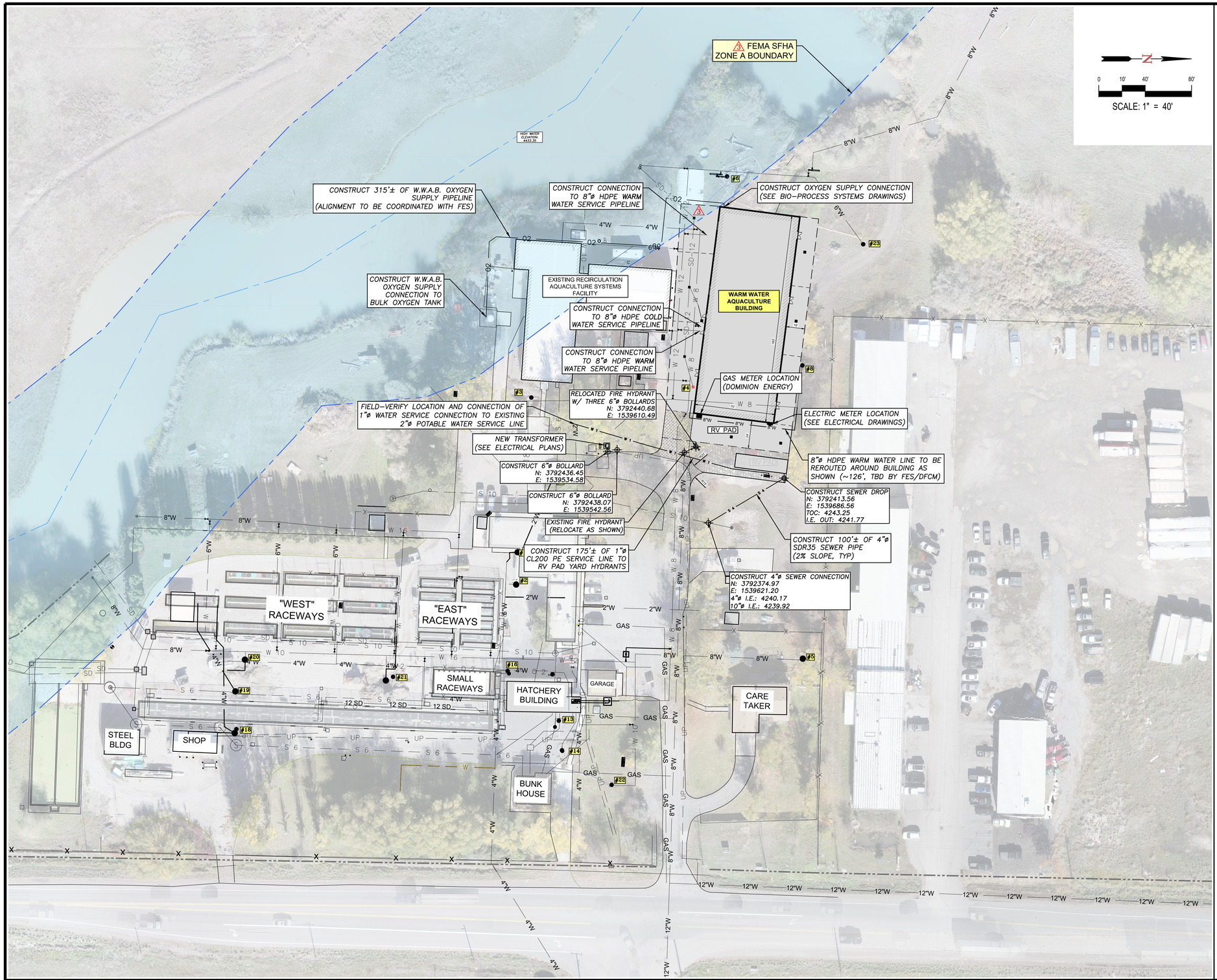

GENERAL CONSTRUCTION NOTES:

1. ALL CONSTRUCTION SHALL CONFORM TO UTAH-APWA, DFCM, AND UTAH DIVISION OF DRINKING WATER STANDARDS AND SPECIFICATIONS AS APPLICABLE. CONSTRUCTION MAY BE SUBJECT TO INSPECTION BY, BUT NOT LIMITED TO, THE RESPECTIVE REGULATORY AGENCIES.
2. CONTRACTOR SHALL BE RESPONSIBLE FOR FIELD LOCATING VERIFYING AND PROTECTING ALL EXISTING UTILITIES.
3. CONTRACTOR SHALL DISINFECT POTABLE WATER LINES FOLLOWING CONSTRUCTION PER A.W.W.A. C-652-92 AND SECTION R309-210-20 OF THE UTAH ADMINISTRATIVE CODE. HYPO-CHLORINATED WATER DISCHARGED FROM THE WATER LINES SHALL BE DISPOSED OF PER SECTION R317 OF THE UTAH ADMINISTRATIVE CODE.
4. ALL PIPE FOR RELOCATION OF FIRE HYDRANT SHALL BE DUCTILE IRON CL-51 UNLESS OTHERWISE SPECIFIED.
5. ALL MECHANICAL JOINT FITTINGS SHALL BE PROVIDED WITH THRUST RESTRAINT JOINTS ("MEGA-LUG" OR APPROVED EQUAL). THRUST BLOCKS ARE REQUIRED AT ALL BENDS 22.5 AND GREATER.
6. ALL BURIED FLANGED D.I.P. FITTINGS SHALL BE COATED WITH BITUMASTIC OR ENCASED IN PLASTIC.
7. ALL MATERIALS WHICH MAY COME IN CONTACT WITH DRINKING WATER SHALL BE ANSI-CERTIFIED TO MEET OR EXCEED NSF STANDARD 61, AND SHALL BE STAMPED THEREON TO INDICATE SUCH CERTIFICATION.
8. THROUGHOUT THE DURATION OF CONSTRUCTION, OPEN ENDS OF ALL PIPELINES AND OPENINGS TO STORMWATER SYSTEMS SHALL BE COVERED AND EFFECTIVELY SEALED AT THE END OF THE DAY'S WORK.
9. ALL FILLS SHALL BE PROPERLY PREPARED, PLACED AND COMPACTED IN ACCORDANCE WITH THE RECOMMENDATIONS AND THE SPECIFICATIONS OF THE GEOTECHNICAL REPORT. COMPACTION OF ALL FILLS WILL BE TESTED AND CERTIFIED BY A SOILS ENGINEER UNDER SEPARATE DFCM CONTRACT/SCOPE.
10. DUST SHALL BE CONTROLLED BY WATERING (IN ACCORDANCE WITH LOGAN FES BIO-SECURITY RESTRICTIONS AND REGULATIONS).
11. ADJOINING PROPERTIES SHALL BE PROTECTED FROM CONSTRUCTION ACTIVITIES AND DRAINAGE.
12. EXISTING ASPHALT PAVING SHALL BE SAW-CUT PRIOR TO PATCHING TO FORM A SMOOTH TRANSITION BETWEEN NEW AND EXISTING FINISHED SURFACES. PATCHES TO BE 3" A.C./12" A.B.
13. CONTRACTOR SHALL POT-HOLE DEPTHS OF EXISTING UTILITIES PRIOR TO CONSTRUCTING NEW UTILITIES AND/OR FACILITIES, DEPTHS SHALL BE ADJUSTED, AT THE DIRECTION OF THE ENGINEER, AS NEEDED.
14. FOLLOWING INSTALLATION OF NEW FACILITIES, CONTRACTOR SHALL FINE GRADE SITE TO THE LINES AND GRADES INDICATED ON THE GRADING & SITE PLAN.

GENERAL LEGEND

4441	PROPOSED CONTOUR (1')
-4440-	EXISTING CONTOUR MAJOR (5')
-4441-	EXISTING CONTOUR MINOR (1')
W	EXISTING COLD AND WARM WATER LINE
SD-12	NEW 12"ø STORM DRAIN PIPELINE
UGE	NEW UNDERGROUND ELECTRIC/POWER LINE
W 1	NEW WATER SERVICE/MAIN LINE
S 4	NEW SEWER SERVICE LINE
LPG	NEW LIQUID PROPANE GAS LINE
W	WELLHEAD
02	OXYGEN SUPPLY LINE
TOC	TOP OF CONCRETE
TOA	TOP OF ASPHALT
FG	FINISHED GRADE
NG	NATURAL GRADE
PC	POINT OF CURVATURE
PT	POINT OF TANGENCY
	NEW CONCRETE WALKWAY/SURFACE
	NEW HMA PAVEMENT SURFACE
	STORMWATER CATCH BASINS
	SLOPE ARROW
	FIRE HYDRANT
#18	WELLHEAD POINT NUMBER

REVIEWED FOR CODE COMPLIANCE
Thomas W Peterson
12/1/2023
DIVISION OF FACILITIES CONSTRUCTION AND MANAGEMENT
DFCM CODE COMPLIANCE OFFICER

NO.	REVISIONS	BY	DATE
	PUBLISHED		
3	LOGAN CITY FEMA FLOODPLAIN REVIEW COMMENTS & RECOMENDATIONS 12/4/2023		

This document or any part thereof in detail or design concept is the property of Forsgren Associates Inc. and shall not be copied without the written authorization of Forsgren Associates Inc.

DRAWN
DESIGNED
APPROVED
QA

ATTENTION
LINE IS 2-INCHES
AT 24"x36" SIZE
IF NOT 2-INCHES, SCALE DRAWING ACCORDINGLY

LICENSED PROFESSIONAL ENGINEER ERIC E. DURSTELER NO. 323794 10-4-23 STATE OF UTAH

LOGAN FISH HATCHERY
UTAH DIVISION OF WILDLIFE RESOURCES
1465 WEST 200 NORTH
LOGAN, UTAH 84321

UTAH DNR WILDLIFE RESOURCES

FORSGREN Associates Inc.
95 WEST 100 SOUTH, STE. 115, LOGAN, UT 84321
PH: 435.227.0333 FAX: 435.227.0334

Blue Stakes of UTAH 811 Bluestakes.org

WARM WATER AQUACULTURE BUILDING
LOGAN HATCHERY IMPROVEMENT PROJECT

GENERAL UTILITY PLAN

PROJECT NO: 14-23-0005
SHEET NO: UP-1
DATE: 10-4-2023
PAGE NO: 6

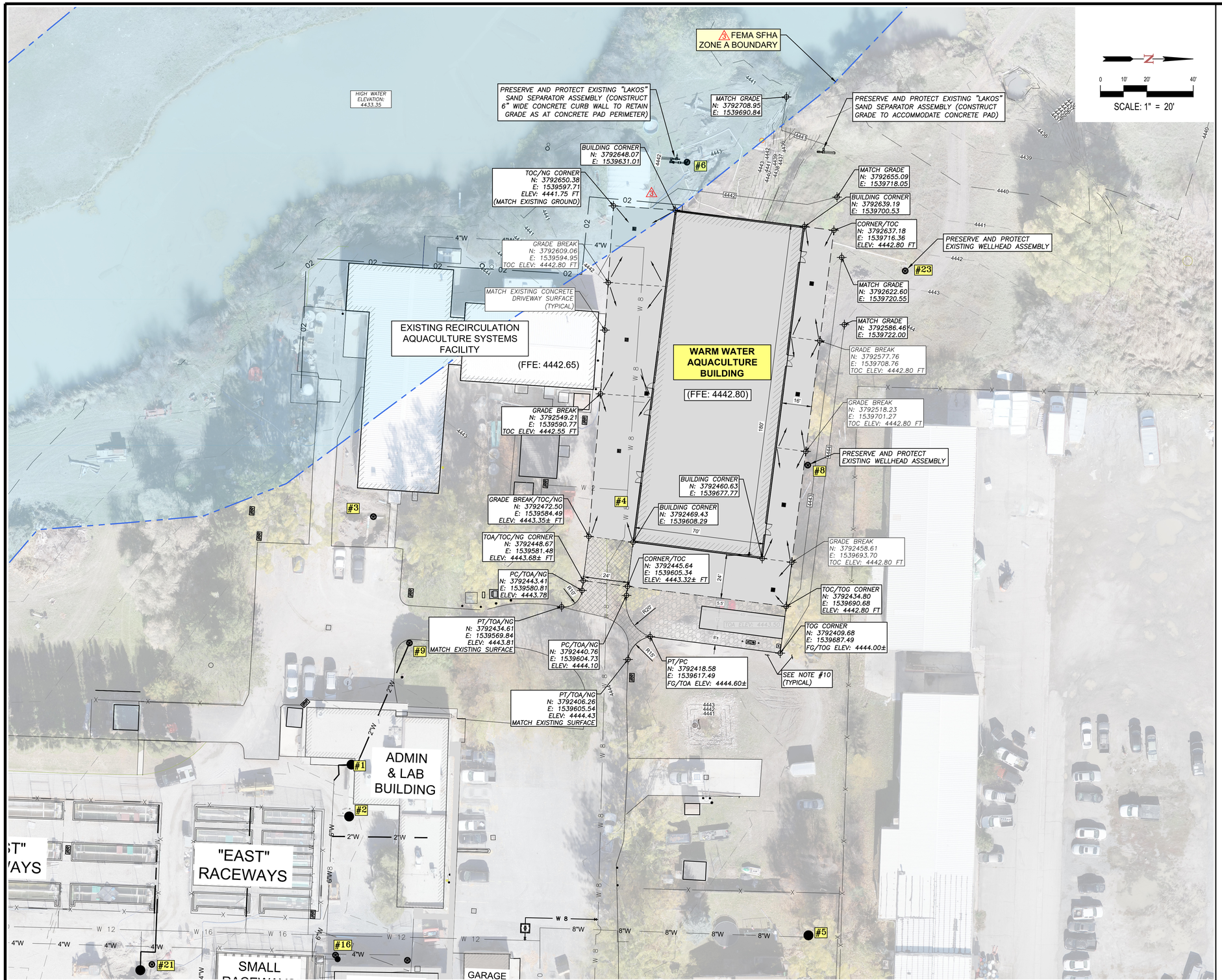

GRADING AND DRAINAGE CONSTRUCTION NOTES:

1. ALL PROPOSED SITE FEATURES SHALL BE LAID OUT AND STAKED FOR REVIEW AND APPROVAL BY THE OWNER'S REPRESENTATIVE PRIOR TO COMMENCEMENT OF INSTALLATION. ANY REQUIRED ADJUSTMENTS TO THE LAYOUT SHALL BE UNDERTAKEN AS DIRECTED, AT NO ADDITIONAL COST TO THE OWNER.
2. THE CONTRACTOR SHALL VERIFY ALL DIMENSIONS AND GRADES ON THE GROUND AND REPORT ANY DISCREPANCIES IMMEDIATELY TO THE ENGINEER.
3. NO CONSTRUCTION WILL BE PERFORMED WITHOUT THE PROPOSED CONSTRUCTION BASELINES AND LAYOUTS BEING STAKED IN THE FIELD AND THE SAME BEING APPROVED BY OWNER AND
4. ALL BACKFILL MATERIALS SHALL BE PLACED AND COMPACTED AS SPECIFIED TO THE SUBGRADE REQUIRED FOR THE INSTALLATION OF THE REMAINDER OF THE CONTRACT WORK.

SITE RECLAMATION AND RESTORATION:

5. WHERE NEW EARTHWORK MEETS EXISTING EARTHWORK, CONTRACTOR SHALL BLEND NEW EARTHWORK SMOOTHLY INTO EXISTING SURFACES, AND PROVIDE VERTICAL CURVES OR ROUNDS AT ALL TOP AND BOTTOM OF SLOPES.
6. CONTRACTOR SHALL FINE GRADE THE SITE TO LINES, GRADES, AND ELEVATIONS SHOWN HEREON.WHERE A SPECIFIC LIMIT OF WORK LINE IS NOT OBVIOUS OR IMPLIED, CONTRACTOR SHALL BLEND GRADES TO MATCH AND MEET EXISTING CONDITIONS.
7. CONTRACTOR SHALL RESTORE ALL DISTURBED AREAS AND LIMITS OF ALL REMOVALS WITH 6-INCHES OF TOPSOIL MATERIAL AND RAKE AND WORK SUCH MATERIAL IN ORDER TO FORM A SMOOTH AND AESTHETICALLY PLEASING FINISHED GRADE FREE FROM ROUGHNESS, BUMPS, RIDGES OR IRREGULARITIES; UNLESS OTHERWISE NOTED.

FINISHED GRADING, TOPPING, AND LANDSCAPING:

8. WHERE NEW EARTHWORK MEETS EXISTING EARTHWORK, CONTRACTOR SHALL BLEND NEW EARTHWORK SMOOTHLY INTO EXISTING, PROVIDING VERTICAL CURVES OR ROUNDS AT ALL TOP AND BOTTOM OF SLOPES.
9. CONTRACTOR SHALL FINE GRADE THE SITE TO LINES, GRADES, AND ELEVATIONS SHOWN HEREON. WHERE A SPECIFIC LIMIT OF WORK LINE AND/OR FINISHED GRADE IS NOT OBVIOUS OR IMPLIED, CONTRACTOR SHALL BLEND GRADES AND MATERIALS AT A 12:1 SLOPE FROM TOP OF PAVEMENT TO NATURAL GRADE UNLESS OTHERWISE SHOWN HEREON TO MATCH AND MEET EXISTING CONDITIONS.
10. CONTRACTOR SHALL RESTORE GROUND SURFACE AND ALL DISTURBED AREAS AROUND NEW FACILITY BEGINNING FROM ITS PERIMETER AND EXTENDING THEREFROM 15' WITH 6" OF LOAM TOPSOIL. CONTRACTOR SHALL RAKE AND WORK TOPSOIL IN ORDER TO FORM A SMOOTH AND FINISHED GRADE FREE FROM ROUGHNESS, BUMPS, RIDGES OR IRREGULARITIES AND APPLY THEREON A DFCM/DWR-APPROVED SEED MIX, ACCORDING TO MANUFACTURER'S RECOMMENDATIONS.

GENERAL LEGEND

4441	PROPOSED CONTOUR (1')
-4440-	EXISTING CONTOUR MAJOR (5')
-4441-	EXISTING CONTOUR MINOR (1')
W	EXISTING COLD AND WARM WATER LINE
SD–12	NEW 12"ø STORM DRAIN PIPELINE
UGE	NEW UNDERGROUND ELECTRIC/POWER LINE
W 1	NEW WATER SERVICE/MAIN LINE
S 4	NEW SEWER SERVICE LINE
LPG	NEW LIQUID PROPANE GAS LINE
W	WELLHEAD
02	OXYGEN SUPPLY LINE
TOC	TOP OF CONCRETE
TOA	TOP OF ASPHALT
FG	FINISHED GRADE
NG	NATURAL GRADE
PC	POINT OF CURVATURE
PT	POINT OF TANGENCY
	NEW CONCRETE WALKWAY/SURFACE
	NEW HMA PAVEMENT SURFACE
	STORMWATER CATCH BASINS
	SLOPE ARROW
	FIRE HYDRANT
#18	WELLHEAD POINT NUMBER

REVIEWED FOR CODE COMPLIANCE
Thomas W Pearson
12/1/2023
DIVISION OF FACILITIES CONSTRUCTION AND MANAGEMENT
DFCM CODE COMPLIANCE OFFICER

NO.	REVISIONS	BY	DATE
3	LOGAN CITY FEMA FLOODPLAIN REVIEW COMMENTS & RECOMENDATIONS 12/4/2023		

PUBLISHED

This document or any part thereof in detail or design concept is the property of Forsgren Associates Inc. and shall not be copied without the written authorization of Forsgren Associates Inc.

DRAWN
DESIGNED
APPROVED
QA

ATTENTION
LINE IS 2-INCHES AT 24"x36" SIZE
IF NOT 2-INCHES, SCALE DRAWING ACCORDINGLY

LICENSED PROFESSIONAL ENGINEER — ERIC E. DURSTELER — NO. 323794 — 10-4-23 — STATE OF UTAH

LOGAN FISH HATCHERY
UTAH DIVISION OF WILDLIFE RESOURCES
1465 WEST 200 NORTH
LOGAN, UTAH 84321

UTAH DNR WILDLIFE RESOURCES

FORSGREN Associates Inc.
95 WEST 100 SOUTH, STE. 115, LOGAN, UT 84321
PH: 435.227.0333 FAX: 435.227.0334

Blue Stakes of UTAH 811 Bluestakes.org

WARM WATER AQUACULTURE BUILDING
LOGAN HATCHERY IMPROVEMENT PROJECT

SITE & GRADING PLAN

PROJECT NO: 14-23-0005
SHEET NO: S&G-1
DATE: 10-4-2023
PAGE NO: 7

HIGH WATER ELEVATION: 4433.35

12"ø STORMDRAIN CROSSING
N: 3792673.76
E: 1539704.01
EXISTING GROUND ELEV: ~4441.12 FT
EXISTING 10"ø WW PIPELINE I.E.: ~4438.05 FT
PROPOSED 12"ø SW I.E.: 4435.62 FT

EAST SW DISCHARGE POINT
N: 3792704.96
E: 1539703.85
(FEILD VERIFY)
INVERT ELEV: 4435.35 FT

FEMA SFHA ZONE A BOUNDARY

#6

CONSTRUCT 92'± OF 12"ø N12-HDPE CORRUGATED PIPE

"WEST-SIDE" DISCHARGE/RUNOFF MANAGEMENT SYSTEM (CONSTRUCTED PREVIOUSLY UNDER SEPARATE WORK CONTRACT)

CONSTRUCT 2'x2' CB-E5
N: 3792608.55
E: 1539704.38
GRATE ELEV: 4442.56
INVERT ELEV: 4435.94

#23

EXISTING RECIRCULATION AQUACULTURE SYSTEMS FACILITY

WARM WATER AQUACULTURE BUILDING

CONSTRUCT 60'± OF 12"ø N12-HDPE CORRUGATED PIPE

CONSTRUCT 2'x2' CB-E4
N: 3792549.03
E: 1539696.90
GRATE ELEV: 4442.56
INVERT ELEV: 4436.39

CONSTRUCT "SHORTY" CATCH BASIN w/FRAME & GRATE
N: 3792549.40
E: 1539615.58
GRATE ELEV: 4442.65
INVERT ELEV: 4440.02
(CONNECT TO PIPE STUB. 4"ø PVC)

CONSTRUCT 60'± OF 12"ø N12-HDPE CORRUGATED PIPE

#8

CONSTRUCT 2'x2' CB-E3
N: 3792489.53
E: 1539689.36
GRATE ELEV: 4442.56
INVERT ELEV: 4436.84

#4

#3

CONSTRUCT 40'± OF 12"ø N12-HDPE CORRUGATED PIPE

CONSTRUCT 43'± OF 12"ø N12-HDPE CORRUGATED PIPE

CROSSING 8"ø WARM WATER PIPE
N: 3792475.21
E: 1539687.58
TOC ELEV: 4442.90 FT
EXISTING 8"ø WW PIPELINE I.E. ~4441.96
PROPOSED 12"ø SW I.E. 4437.12

CONSTRUCT 2'x2' CB-E1
N: 3792449.17
E: 1539641.02
GRATE ELEV: 4442.48 FT
INVERT ELEV: 4437.50 FT

CONSTRUCT 2'x2' CB-E2
N: 3792443.78
E: 1539683.59
GRATE ELEV: 4442.40
INVERT ELEV: 4437.18

#9

#1

ADMIN & LAB

SCALE: 1" = 20'

0 10' 20' 40'

DRAINAGE SYSTEM CONSTRUCTION NOTES:

1. ALL PROPOSED SITE FEATURES SHALL BE LAID OUT AND STAKED FOR REVIEW AND APPROVAL BY THE OWNER'S REPRESENTATIVE PRIOR TO COMMENCEMENT OF INSTALLATION. ANY REQUIRED ADJUSTMENTS TO THE LAYOUT SHALL BE UNDERTAKEN AS DIRECTED, AT NO ADDITIONAL COST TO THE OWNER.
2. THE CONTRACTOR SHALL VERIFY ALL DIMENSIONS AND GRADES ON THE GROUND AND REPORT ANY DISCREPANCIES IMMEDIATELY TO THE ENGINEER.
3. WHERE NEW EARTHWORK MEETS EXISTING EARTHWORK, CONTRACTOR SHALL BLEND NEW EARTHWORK SMOOTHLY INTO EXISTING SURFACES, AND PROVIDE VERTICAL CURVES OR ROUNDS AT ALL TOP AND BOTTOM OF SLOPES.
4. CONTRACTOR SHALL FINE GRADE THE SITE TO LINES, GRADES, AND ELEVATIONS SHOWN HEREON. WHERE A SPECIFIC LIMIT OF WORK LINE AND/OR FINISHED GRADE IS NOT OBVIOUS OR IMPLIED, CONTRACTOR SHALL BLEND GRADES AND MATERIALS AT A 12:1 SLOPE FROM TOP OF PAVEMENT TO NATURAL GRADE, UNLESS OTHERWISE SHOWN OR INDICATED, TO MATCH AND MEET EXISTING CONDITIONS.
5. CONTRACTOR SHALL RESTORE ALL DISTURBED AREAS AND LIMITS OF ALL REMOVALS WITH 6-INCHES OF TOPSOIL MATERIAL AND RAKE AND WORK SUCH MATERIAL IN ORDER TO FORM A SMOOTH AND AESTHETICALLY PLEASING FINISHED GRADE FREE FROM ROUGHNESS, BUMPS, RIDGES OR IRREGULARITIES; UNLESS OTHERWISE NOTED.
6. CONTRACTOR SHALL RESTORE GROUND SURFACE AND ALL DISTURBED AREAS AROUND NEW FACILITY BEGINNING FROM ITS PERIMETER AND EXTENDING THEREFROM 15' WITH 6" OF LOAM TOPSOIL. CONTRACTOR SHALL RAKE AND WORK TOPSOIL IN ORDER TO FORM A SMOOTH AND FINISHED GRADE FREE FROM ROUGHNESS, BUMPS, RIDGES OR IRREGULARITIES AND APPLY THEREON AN APPROVED SEED MIX ACCORDING TO MANUFACTURER'S RECOMMENDATIONS.

GENERAL LEGEND

4441	PROPOSED CONTOUR (1')
-4440-	EXISTING CONTOUR MAJOR (5')
-4441-	EXISTING CONTOUR MINOR (1')
W	EXISTING COLD AND WARM WATER LINE
SD-12	NEW 12"ø STORM DRAIN PIPELINE
UGE	NEW UNDERGROUND ELECTRIC/POWER LINE
W 1	NEW WATER SERVICE/MAIN LINE
S 4	NEW SEWER SERVICE LINE
LPG	NEW LIQUID PROPANE GAS LINE
W	WELLHEAD
02	OXYGEN SUPPLY LINE
TOC	TOP OF CONCRETE
TOA	TOP OF ASPHALT
FG	FINISHED GRADE
NG	NATURAL GRADE
PC	POINT OF CURVATURE
PT	POINT OF TANGENCY
	NEW CONCRETE WALKWAY/SURFACE
	NEW HMA PAVEMENT SURFACE
	STORMWATER CATCH BASINS
	SLOPE ARROW
	FIRE HYDRANT
#18	WELLHEAD POINT NUMBER

REVIEWED FOR CODE COMPLIANCE
Thomas W Peterson
12/14/2023
DIVISION OF FACILITIES CONSTRUCTION AND MANAGEMENT

DFCM CODE COMPLIANCE OFFICER

NO.	REVISIONS	BY	DATE
3	LOGAN CITY FEMA FLOODPLAIN REVIEW COMMENTS & RECOMENDATIONS 12/4/2023		

PUBLISHED

DRAWN

DESIGNED

APPROVED

QA

This document or any part thereof in detail or design concept is the property of Forsgren Associates Inc. and shall not be copied without the written authorization of Forsgren Associates Inc.

ATTENTION
LINE IS 2-INCHES
AT 24"x36" SIZE
IF NOT 2-INCHES, SCALE DRAWING ACCORDINGLY

LICENSED PROFESSIONAL ENGINEER
ERIC E. DURSTELER
NO. 323794
10-4-23
STATE OF UTAH

LOGAN FISH HATCHERY
UTAH DIVISION OF WILDLIFE RESOURCES
1465 WEST 200 NORTH
LOGAN, UTAH 84321

UTAH DNR WILDLIFE RESOURCES

FORSGREN Associates Inc.
95 WEST 100 SOUTH, STE. 115, LOGAN, UT 84321
PH: 435.227.0333 FAX: 435.227.0334

Blue Stakes of UTAH 811 Bluestakes.org

WARM WATER AQUACULTURE BUILDING
LOGAN HATCHERY IMPROVEMENT PROJECT

DISCHARGE / RUNOFF WATER MANAGEMENT PLAN

PROJECT NO: 14-23-0005
SHEET NO: DWP-1
DATE: 10-4-2023
PAGE NO: 8

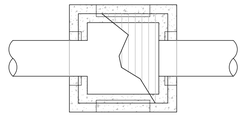

A PLAN VIEW – CATCH BASIN
NOT TO SCALE

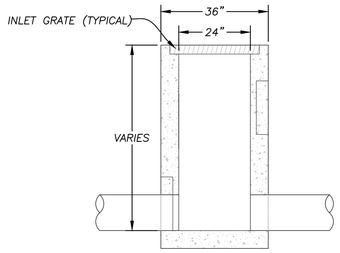

B ELEVATION – CATCH BASIN
NOT TO SCALE

CONSTRUCTION NOTES:

1. CATCH BASIN TO BE "AMCOR" REINFORCED PRECAST CONCRETE w/ FRAME AND INLET GRATE FOR CATCH BASINS (RISER SECTION AS NEEDED TO MATCH EXISTING GRADE; ("AMCOR" OR APPROVED EQUAL)
2. NO TRAP (H220 LOADING)

CATCH BASIN DETAIL 1
N.T.S.

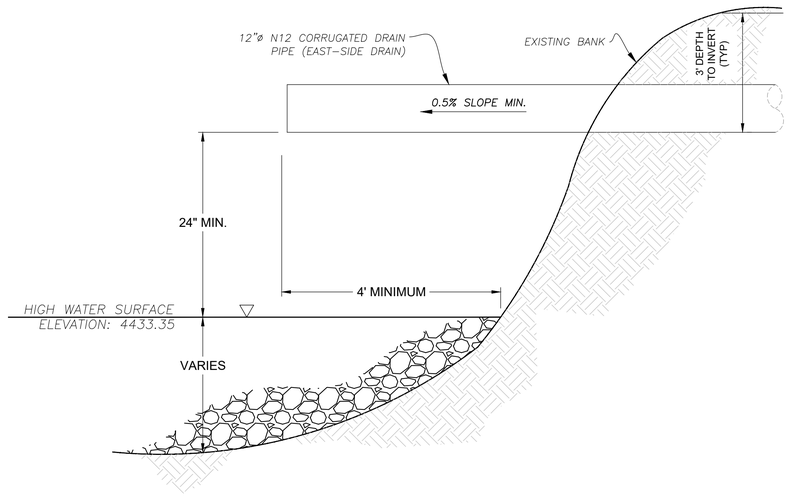

DRAIN-TO-DAYLIGHT - TYP 2
N.T.S.

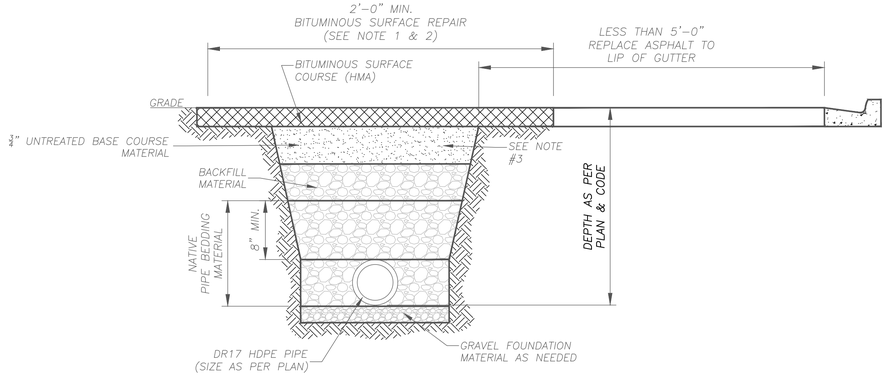

NOTES:

1. SAW CUT BITUMINOUS ASPHALT SURFACE 12" WIDER THAN TRENCH ON EACH SIDE FOR FINAL TRENCH REPAIR WHERE BITUMINOUS SURFACE EXISTS
2. BITUMINOUS SURFACE IS TO BE 5" OR TO MATCH EXISTING THICKNESS, WHICHEVER IS GREATER FOR STATE ROADS & 3" OR MATCH EXISTING THICKNESS, WHICHEVER IS GREATER FOR OTHER ROADS.
3. FOR TRENCH REPAIR, ¾" UNTREATED BASE COURSE MATERIAL IS TO BE 12" OR TO MATCH EXISTING THICKNESS, WHICHEVER IS GREATER. FOR NEW ROAD CONSTRUCTION, ¾" UNTREATED BASECOURSE MATERIAL IS TO BE 10" MIN. OR AS DIRECTED BY THE ENGINEER. BASE COURSE TO BE COMPACTED TO 96% ASTM D–1557.
4. SLOPE TRENCH SIDES TO MEET OSHA SAFETY REGULATIONS. (LATEST REV.)

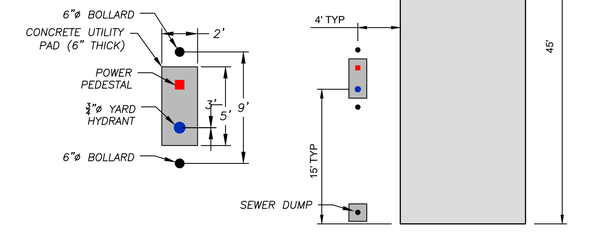

EXTENDED-STAY RV PAD WITH UTILITY CONNECTIONS 3
N.T.S

"WOODFORD" Y34–5 FROST–PROOF YARD HYDRANT (5' BURY)

YARD HYDRANT 4
NOT TO SCALE

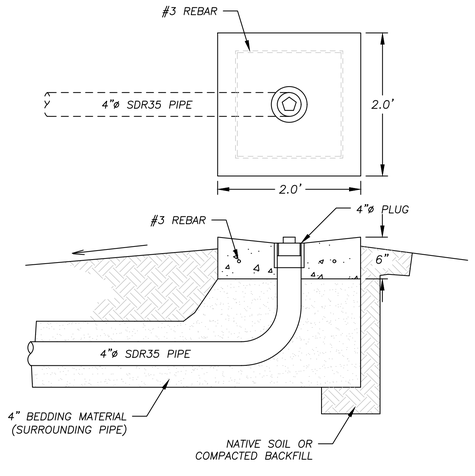

RV SITE SEWER DUMP 5
NOT TO SCALE

RV SITE SEWER DUMP CONSTRUCTION NOTES:

1. CONCRETE SHALL BE MINIMUM 4000 PSI AT 7 DAYS.
2. PIPE SHALL BE ASTM D–3034 (SDR–35).
3. PIPE FITTINGS SHALL BE SCH–40 PVC SOLVENT WELD.
4. SURROUNDING SOIL FINISHED GRADE SHALL SLOPE AWAY FROM THE DUMP PORT.
5. REQUIRED LINE VENTING SHALL CONFORM TO UPC.
6. THREADED PLUG SHALL PROVIDE A WATERTIGHT SEAL EXCEPT WHEN DUMPING.
7. CONCRETE PAD SHALL BE PLACED OVER 8" OF 3/4" MINUS CRUSHED ROCK.
8. CONCRETE PAD SHALL BE 6" THICK AT THE EDGES AND 5" THICK AT THE CENTER, AND HAVE 1–#3 REBAR AS SHOWN.

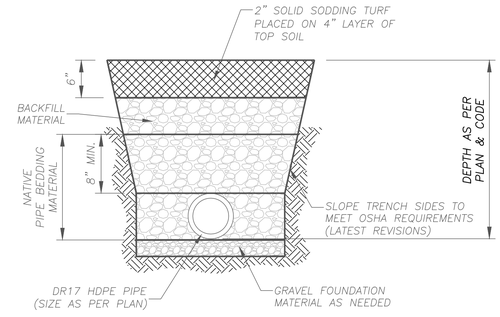

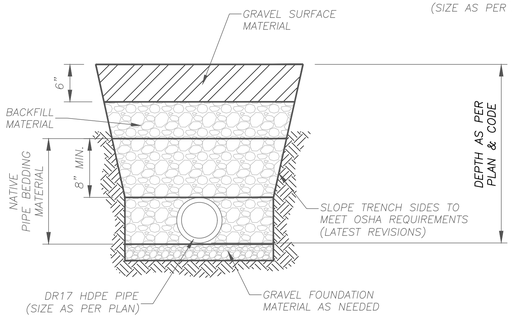

TYPICAL TRENCH DETAIL 5
N.T.S.

REVIEWED FOR CODE COMPLIANCE
Thomas W Peterson
12/14/2023
DIVISION OF FACILITIES CONSTRUCTION AND MANAGEMENT

DFCM CODE COMPLIANCE OFFICER

NO.	REVISIONS	BY	DATE

PUBLISHED

This document or any part thereof in detail or design concept is the property of Forsgren Associates Inc. and shall not be copied without the written authorization of Forsgren Associates Inc.

DRAWN
DESIGNED
APPROVED
QA

ATTENTION
LINE IS 2-INCHES
AT 24"x36" SIZE
IF NOT 2-INCHES, SCALE DRAWING ACCORDINGLY

LICENSED PROFESSIONAL ENGINEER ERIC E. DURSTELER NO. 323794 10-4-23 STATE OF UTAH

LOGAN FISH HATCHERY
UTAH DIVISION OF WILDLIFE RESOURCES
1465 WEST 200 NORTH
LOGAN, UTAH 84321

UTAH DNR WILDLIFE RESOURCES

FORSGREN Associates Inc.
95 WEST 100 SOUTH, STE. 115, LOGAN, UT 84321
PH: 435.227.0333 FAX: 435.227.0334

Blue Stakes of UTAH 811 Bluestakes.org

WARM WATER AQUACULTURE BUILDING
LOGAN HATCHERY IMPROVEMENT PROJECT

GENERAL DETAILS

PROJECT NO: 14-23-0005
SHEET NO: D-1
DATE: 10-4-2023
PAGE NO: 9

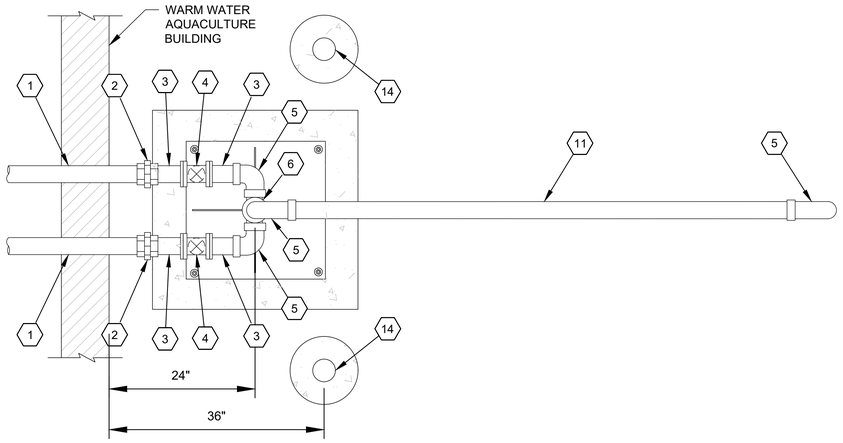

PLAN VIEW 1
N.T.S.

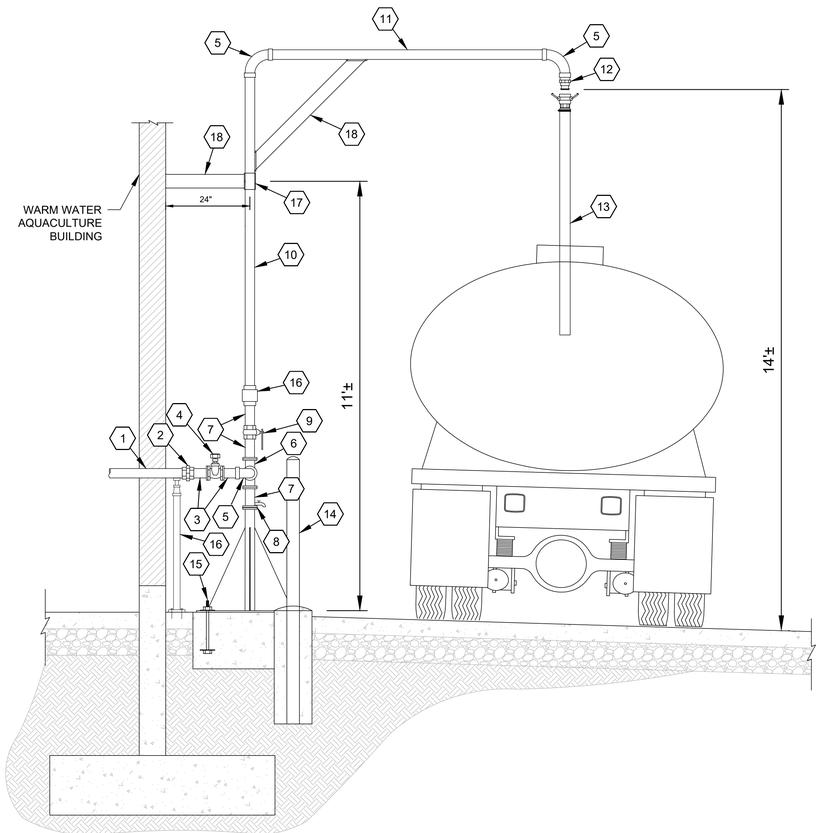

ELEVATION VIEW 2
N.T.S.

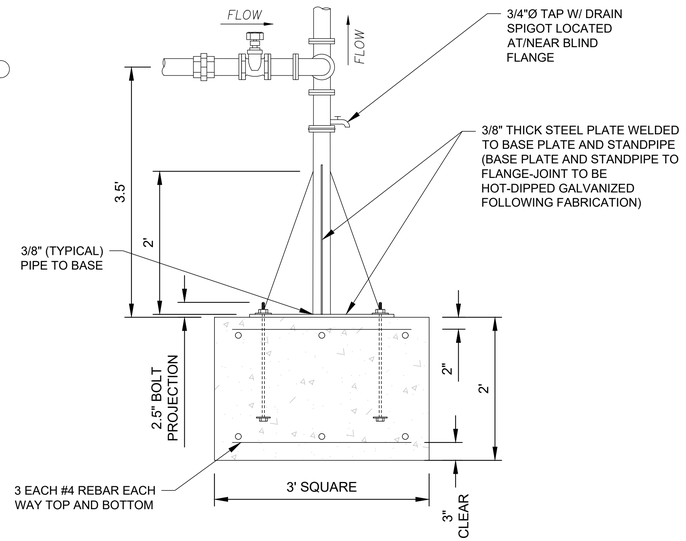

PEDESTAL SECTION DETAIL 3
SCALE: 1" = 1'

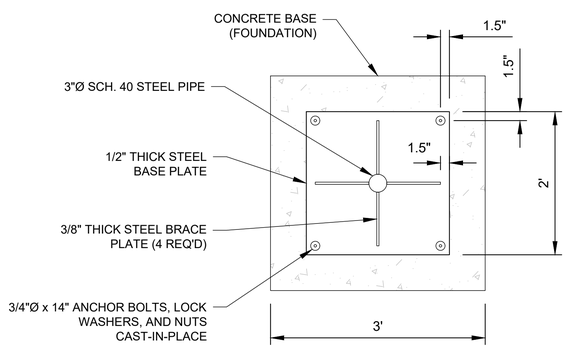

BASE PLATE AND STANDPIPE (BASE PLATE AND STANDPIPE TO FLANGE-JOINT TO BE HOT-DIPPED GALVANIZED FOLLOWING FABRICATION)

PEDESTAL BASE PLAN 4
SCALE: 1" = 1'

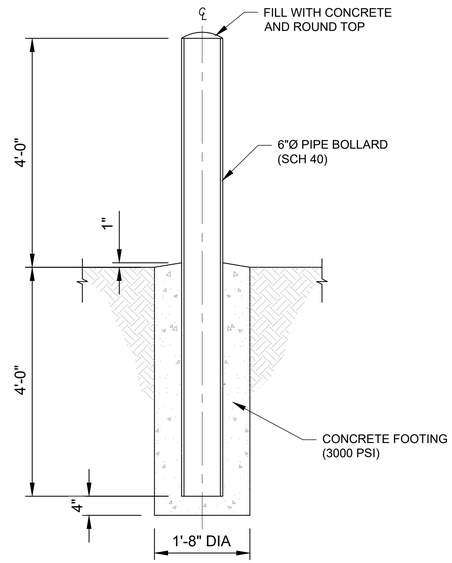

STEEL BOLLARD ASSEMBLY SHALL BE HOT-DIPPED GALVANIZED FOLLOWING FABRICATION AND EPOXY-PAINTED "SAFETY YELLOW"

BOLLARD DETAIL 5
N.T.S.

PIPE, FITTINGS AND EQUIPMENT SCHEDULE

ITEM	QTY	SIZE	DESCRIPTION
1	2	3"ø x TBD	SCH. 40 GALVANIZED PIPE – CONNECT TO WARM WATER & COLD WATER PIPELINES IN BUILDING W/ 4"x3" REDUCERS
2	2	3"ø	SCH. 40 GALVANIZED UNION
3	4	3"ø x 4"±	SCH. 40 GALVANIZED PIPE NIPPLE
4	2	3"ø	"HOMESTEAD" PLUG VALVE (OR APPROVED EQUAL)
5	4	3"ø	SCH. 40 GALVANIZED 90° BEND
6	1	3"ø	SCH. 40 GALVANIZED CROSS
7	3	3"ø x 0'-8"±	SCH. 40 GALVANIZED PIPE NIPPLE
8	1	3"ø	SCH. 40 GALVANIZED BLIND FLANGE
9	1	3"ø	SCH. 40 BRASS BALL VALVE
10	1	3"ø x 7'-11"±	SCH. 40 GALVANIZED PIPE
11	1	3"ø x 7'-0"±	SCH. 40 GALVANIZED PIPE
12	1	3"ø	HOSE ADAPTER QUICK DISCONNECT COUPLING (CAMPLOCK)
13	1	3"ø	60" POLYESTER JACKET HOSE, WITH EPDM LINER, MIN. 250 PSI TEST PRESSURE, CAMLOCK CONNECTION ONE END ONLY
14	2	6"ø	CONCRETE BOLLARDS, PAINT YELLOW, LOCATE AS SHOWN.
15	1	–	3/4" x 14" ANCHOR BOLTS, LOCK WASHERS, AND NUTS CAST-IN-PLACE
16	1	3"ø	DIXON SINGLE PLANE SWIVEL V-RING STYLE 20 STAINLESS STEEL (304SS) FEMALE NPT X FEMALE NPT OR APPROVED EQUAL.
17	1	3.5"ø x 8" LONG	SCH. 40 GALVANIZED PIPE COLLAR
18	–	–	SEE STRUCTURAL DRAWINGS

* OR AN APPROVED EQUAL

REVIEWED FOR CODE COMPLIANCE
Thomas W Peterson
12/14/2023
DIVISION OF FACILITIES CONSTRUCTION AND MANAGEMENT
DFCM CODE COMPLIANCE OFFICER

NO.	REVISIONS	BY	DATE
	PUBLISHED		

This document or any part thereof in detail or design concept is the property of Forsgren Associates Inc. and shall not be copied without the written authorization of Forsgren Associates Inc.

DRAWN
DESIGNED
APPROVED
QA

ATTENTION
LINE IS 2-INCHES
AT 24"x36" SIZE
IF NOT 2-INCHES, SCALE DRAWING ACCORDINGLY

LICENSED PROFESSIONAL ENGINEER ERIC E. DURSTELER NO. 323794 10-4-23 STATE OF UTAH

LOGAN FISH HATCHERY
UTAH DIVISION OF WILDLIFE RESOURCES
1465 WEST 200 NORTH
LOGAN, UTAH 84321

UTAH DNR WILDLIFE RESOURCES

FORSGREN Associates Inc.
95 WEST 100 SOUTH, STE. 115, LOGAN, UT 84321
PH: 435.227.0333 FAX: 435.227.0334

Blue Stakes of UTAH 811 Bluestakes.org

WARM WATER AQUACULTURE BUILDING
LOGAN HATCHERY IMPROVEMENT PROJECT

BULK WATER (TRUCK FILL) DISPENSING STATION

PROJECT NO: 14-23-0005
SHEET NO: BD-1
DATE: 10-4-2023
PAGE NO: 10

ENVELOPE COMCHECK

COMcheck Software Version COMcheckWeb
Envelope Compliance Certificate

Project Information

Energy Code: 90.1 (2019) Standard
Project Title: Warm Water Aquaculture Building - Logan Hatchery
Location: Logan, Utah
Climate Zone: 5b
Project Type: New Construction
Performance Sim. Specs: EnergyPlus 8.1.0.009 (EPW: USA_UT_Salt.Lake.City.Intl.AP.725720_TMY3.epw)

Construction Site:
1465 West 200 North
Logan, Utah 84321

Owner/Agent:
Utah Division of Wildlife Resources
1465 West 200 North
logan, Utah 84321

Designer/Contractor:
Ryan Lemon
Design West Architects
255 S 300 W
Logan, Utah 84321
4357527031
ryanl@designwestarchitects.com

Building Area	Floor Area
1-Fish Hatchery (Manufacturing Facility) : Semiheated	12600

Envelope Assemblies

Assembly	Gross Area or Perimeter	Cavity R-Value	Cont. R-Value	Proposed U-Factor	Budget U-Factor$_{alt}$
Floor: Unheated Slab-On-Grade, [Bldg. Use 1 - Fish Hatchery] (b)	500	---	---	0.730	0.730
Roof: Insulation Entirely Above Deck, [Bldg. Use 1 - Fish Hatchery]	12600	---	35.0	0.028	0.063
NORTH					
Ext. Wall: Steel-Framed, 24in. o.c., [Bldg. Use 1 - Fish Hatchery]	1418	0.0	21.0	0.042	0.084
EAST					
Ext. Wall: Steel-Framed, 24in. o.c., [Bldg. Use 1 - Fish Hatchery]	2867	0.0	21.0	0.042	0.084
Door: Insulated Metal, Swinging, [Bldg. Use 1 - Fish Hatchery]	42	---	---	0.360	0.370
Door: Insulated Metal, Swinging, [Bldg. Use 1 - Fish Hatchery]	42	---	---	0.360	0.370
Door: Insulated Metal, Swinging, [Bldg. Use 1 - Fish Hatchery]	21	---	---	0.360	0.370
Door: Insulated Metal, Swinging, [Bldg. Use 1 - Fish Hatchery]	21	---	---	0.360	0.370
SOUTH					
Ext. Wall: Steel-Framed, 24in. o.c., [Bldg. Use 1 - Fish Hatchery]	1418	0.0	21.0	0.042	0.084
WEST					
Ext. Wall: Steel-Framed, 24in. o.c., [Bldg. Use 1 - Fish Hatchery]	4432	0.0	21.0	0.042	0.084
Door: Insulated Metal, Non-Swinging, [Bldg. Use 1 - Fish Hatchery]	95	---	---	0.230	0.360
Door: Insulated Metal, Swinging, [Bldg. Use 1 - Fish Hatchery]	42	---	---	0.360	0.370
Door: Insulated Metal, Swinging, [Bldg. Use 1 - Fish Hatchery]	21	---	---	0.360	0.370

Project Title: Warm Water Aquaculture Building - Logan Hatchery
Data filename:
Report date: 10/04/23
Page 1 of 9

COMcheck Software Version COMcheckWeb
Envelope Compliance Certificate

Project Information

Energy Code: 90.1 (2019) Standard
Project Title: Warm Water Aquaculture Building - Logan Hatchery
Location: Logan, Utah
Climate Zone: 5b
Project Type: New Construction
Performance Sim. Specs: EnergyPlus 8.1.0.009 (EPW: USA_UT_Salt.Lake.City.Intl.AP.725720_TMY3.epw)

Construction Site:
1465 West 200 North
Logan, Utah 84321

Owner/Agent:
Utah Division of Wildlife Resources
1465 West 200 North
logan, Utah 84321

Designer/Contractor:
Ryan Lemon
Design West Architects
255 S 300 W
Logan, Utah 84321
4357527031
ryanl@designwestarchitects.com

Building Area	Floor Area
1-Fish Hatchery (Manufacturing Facility) : Semiheated	12600

Envelope Assemblies

Assembly	Gross Area or Perimeter	Cavity R-Value	Cont. R-Value	Proposed U-Factor	Budget U-Factor$_{alt}$
Floor: Unheated Slab-On-Grade, [Bldg. Use 1 - Fish Hatchery] (b)	500	---	---	0.730	0.730
Roof: Insulation Entirely Above Deck, [Bldg. Use 1 - Fish Hatchery]	12600	---	35.0	0.028	0.063
NORTH					
Ext. Wall: Steel-Framed, 24in. o.c., [Bldg. Use 1 - Fish Hatchery]	1418	0.0	21.0	0.042	0.084
EAST					
Ext. Wall: Steel-Framed, 24in. o.c., [Bldg. Use 1 - Fish Hatchery]	2867	0.0	21.0	0.042	0.084
Door: Insulated Metal, Swinging, [Bldg. Use 1 - Fish Hatchery]	42	---	---	0.360	0.370
Door: Insulated Metal, Swinging, [Bldg. Use 1 - Fish Hatchery]	42	---	---	0.360	0.370
Door: Insulated Metal, Swinging, [Bldg. Use 1 - Fish Hatchery]	21	---	---	0.360	0.370
Door: Insulated Metal, Swinging, [Bldg. Use 1 - Fish Hatchery]	21	---	---	0.360	0.370
SOUTH					
Ext. Wall: Steel-Framed, 24in. o.c., [Bldg. Use 1 - Fish Hatchery]	1418	0.0	21.0	0.042	0.084
WEST					
Ext. Wall: Steel-Framed, 24in. o.c., [Bldg. Use 1 - Fish Hatchery]	4432	0.0	21.0	0.042	0.084
Door: Insulated Metal, Non-Swinging, [Bldg. Use 1 - Fish Hatchery]	95	---	---	0.230	0.360
Door: Insulated Metal, Swinging, [Bldg. Use 1 - Fish Hatchery]	42	---	---	0.360	0.370
Door: Insulated Metal, Swinging, [Bldg. Use 1 - Fish Hatchery]	21	---	---	0.360	0.370

Project Title: Warm Water Aquaculture Building - Logan Hatchery
Data filename:
Report date: 10/04/23
Page 1 of 9

THERMAL ENVELOPE

BUILDING SHELL TO BE CLOSED-CELL SPRAY FOAM (SEE COMCHECK ON SHEET A-002)

- WALLS: R-21
- ROOF: R-35

GENERAL NOTES

SPRAY FOAM INSULATION - EXTEND TO B.O. DECK - SEE WALL TYPES ON A-601

EGRESS PATH

EXIT — EXIT LOCATION

FE — FIRE EXTINGUISHER

CODE REVIEW

JURISDICTION
STATE OF UTAH

CODE
2021 INTERNATIONAL BUILDING CODE
2021 INTERNATIONAL MECHANICAL CODE
2021 INTERNATIONAL PLUMBING CODE
2021 INTERNATION ENERGY CONVERSATION CODE
2021 INTERNATION FIRE CODE
2020 NATIONAL ELECTRICAL CODE
2010 ADA STANDARDS

OCCUPANCY
OCCUPANCY: F2

REQUIRED SEPARATION OF OCCUPANCIES (508.4)
NONE

TYPE OF CONSTRUCTION
VB

AUTOMATIC SPRINKLER SYSTEM
NONE

BUILDING HEIGHT (504.3)
ALLOWABLE BUILDING HEIGHT 40'-0"
PROPOSED BUILDING HEIGHT 26'-6"

NUMBER OF STORIES (504.4)
ALLOWABLE NUMBER OF STORIES 2
PROPOSED NUMBER OF STORIES 1

BUILDING AREA (TABLE 506.2)
TABULAR AREA ALLOWED: 13,000SF
ACTUAL DESIGNED AREA: 12,600SF

FIRE RESISTIVE REQUIREMENTS (TABLE 601)
PRIMARY STRUCTURAL FRAME 0 HR RATING
BEARING WALLS
EXTERIOR 0 HR RATING
INTERIOR 0 HR RATING
NON BEARING WALLS 0 HR RATING
FLOOR CONSTRUCTION 0 HR RATING
ROOF CONSTRUCTION 0 HR RATING
SHAFT WALLS 1 HR RATING
CORRIDORS 1 HR RATING

OCCUPANT LOAD CALCULATION (TABLE 1004.1.2)
12,600 OCC. / 300 (MECH) = 42 OCCUPANTS

EGRESS WIDTH (TABLE 1005.1)
REQUIRED: OTHER EGRESS 0.2 INCHES X 42 OCCUPANT S = 8.4IN (32IN MIN.)
PROVIDED: 36IN (MIN.) X (8) DOORS

PLUMBING FIXTURE REQUIREMENTS (TABLE 2902.1)
ALL PLUMBING FACILITIES PROVIDED IN ADJCENT STRUCTURES

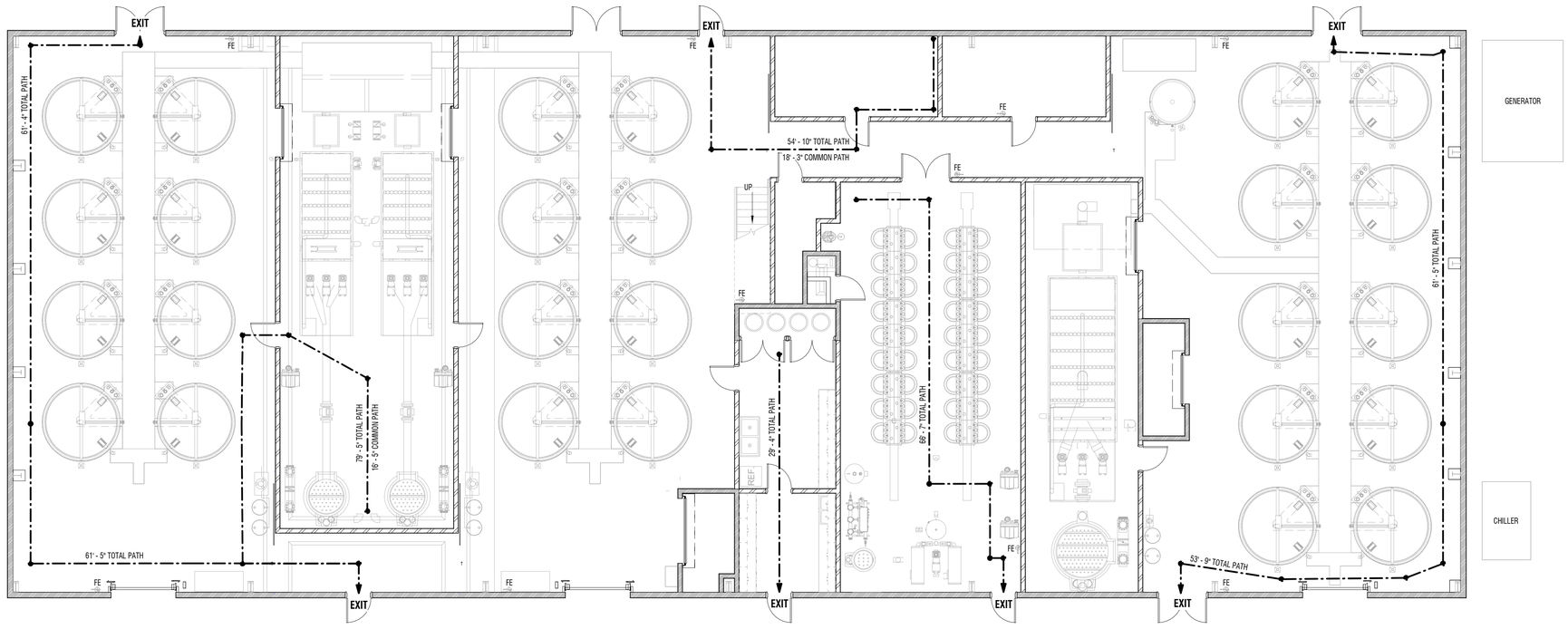

No colors defined

A1 LEVEL 01 - CODE PLAN
1/8" = 1'-0"

REVIEWED FOR CODE COMPLIANCE
Thomas W Peterson
12/14/2023
DIVISION OF FACILITIES CONSTRUCTION AND MANAGEMENT
DFCM CODE COMPLIANCE OFFICER

NO.	REVISIONS	BY DATE

PUBLISHED

This document or any part therof in detail or design concept is the property of Forsgren Associates Inc. and shall not be copied without the written authroization of Forsgren Associates Inc.

DRAWN LOYND
DESIGNED
APPROVED LEMON
QA

ATTENTION
LINE IS 2-INCHES
AT 24"x36" SIZE
IF NOT 2-INCHES, SCALE DRAWINGS ACCORDINGLY

STATE OF UTAH — RYAN WAYNE LEMON — 8668330-0301 — LICENCED ARCHITECT

LOGAN FISH HATCHERY
UTAH DIVISION OF WILDLIFE RESOURCES
1465 WEST 200 NORTH
LOGAN, UTAH 84321

UTAH DNR WILDLIFE RESOURCES

design west | architects
255 SOUTH 300 WEST, LOGAN, UT 84321
PHONE: 435.752.7031

WARM WATER AQUACULTURE BUILDING
LOGAN HATCHERY IMPROVMENT PROJECT
CODE REVIEW

PROJECT NO: 822249
SHEET NO: A-001
DATE: 8-2023
PAGE NO: 11

KEYNOTES ⟨#⟩

MARK	DESCRIPTION
05.26	GRATING, SEE STRUCTURAL
06.11	BLACK OPAQUE VINYL SLATS ON SLIDING TRACK AND RAIL
08.05	8'-0" FENCE GATE
10.15	PROVIDE FALL PROTECTION ANCHOR OVERHEAD
11.14	3'X3'X6" SPILL CONTAINMENT AREA
22.13	FLOOR DRAIN. SEE PLUMBING DRAWINGS

GENERAL NOTES CONT.

1. SEE FINISH PLANS FOR SIGNAGE LOCATION, SIGNAGE SYMBOL
2. SEE SHEET SERIES G-002 FOR ALL FIRE WALLS, SMOKE WALLS, WALLS TO CEILING LEVEL, SOUND WALLS
3. FE = FIRE EXTINGUISHER ON MOUNTING HOOK
4. A1/A-101 INDICATES INTERIOR ROOM ELEVATIONS ON SHEET REFERENCED
5. SEE SITE PLANS FOR EXTERIOR STAIRS, RAILING AND RAMP DETAILS

GENERAL NOTES

1. KEYNOTES ⟨#⟩ THE FIRST TWO NUMBERS REPRESENT THE RELATED CSI MASTER FORMAT DIVISION. THE SECOND SET OF NUMBERS REPRESENTS AN IDENTIFYING MARK VALUE. NOT ALL VALUES MAY BE USED OR OCCUR IN THE DOCUMENT SET.

   ADDITIONALLY, KEYNOTES RETAIN THEIR ASSIGNED VALUE UNIVERSALLY THROUGHOUT THE SET. THE KEYNOTES LISTED BELOW, REPRESENT THE KEYNOTES FOUND AND UTILIZED ON THIS SHEET AND EACH LIST WILL DIFFER RESPECTIVE TO ITS' SHEET. THEREFORE, BASED ON ACTUAL KEYNOTES UTILIZED ON A GIVEN SHEET OF DRAWINGS, GAPS IN THE SEQUENCING WILL OCCUR.
2. CONTRACTOR SHALL BE FAMILIARIZED WITH THE LAY-OUT OF STRUCTURAL, MECHANICAL, AND ELECTRICAL DRAWINGS. ANY QUESTIONS SHALL BE SUBMITTED VIA REQUEST FOR INFORMATION (RFI).
3. ALL INTERIOR DIMENSIONS ARE TO/FROM FACE OF STUD / MASONRY. ALL EXTERIOR DIMENSIONS ARE TO/FROM FACE OF GRID/FOUNDATION. DIMENSIONS MARKED 'CLEAR' OR 'CLR' ARE FROM FACE OF FINISH TO FACE OF FINISH AND SHALL BE MAINTAINED AND CANNOT BE FIELD ADJUSTED WITHOUT PRIOR APPROVAL OF THE ARCHITECT.
4. MIN CLEARANCE REQUIRED ON LATCH SIDE OF DOORS SHALL CONFORM TO ADA REQUIREMENTS

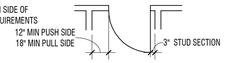

5. HINGE SIDE OF DOORS AT PERPENDICULAR WALLS TO HAVE 3" STUD SECTION U.N.O
6. BLOCKING TO BE PROVIDED AT SHELVING, CASEWORK, RAILINGS, LIGHT FIXTURE, COUNTERTOP, ACCESSORIES AND MORE PER SHEETS A-511 & A-512, TYP
7. PROVIDE 5/8" PLYWOOD BACKING PANELS AT ELECTRICAL ROOMS AND TELEVISION LOCATIONS FOR EQUIPMENT MOUNTING. PAINT TO MATCH WALLS
8. PROVIDE CONTINUOUS WOOD BLOCKING OR METAL STRAPPING FOR ANY WALL MOUNTED OR SUPPORTED ITEMS.
9. WALL TYPES SHOWN AS — S6A ARE SHOWN ON SHEET A-601. FOR OTHER WALLS SEE BUILDING AND WALL SECTIONS. FOR STANDARD STEEL STUD DETAILS SEE SHEETS A-511 & A-512.
10. ALIGN FURRED WALLS AND STUD WALL FINISH FACE TYPICAL. U.N.O.
11. ALL FLOORS WITH DRAINS ARE TO SLOPE TO DRAINS
12. EXTEND ALL WALLS SURROUNDING AN OPEN CEILING AREA TO DECK

NOTE:
ALL INTERIOR WALLS ARE TO BE BUILT ON A 6" X 6" CONCRETE CURB WITH THICKENED SLAB FOAUNDATION

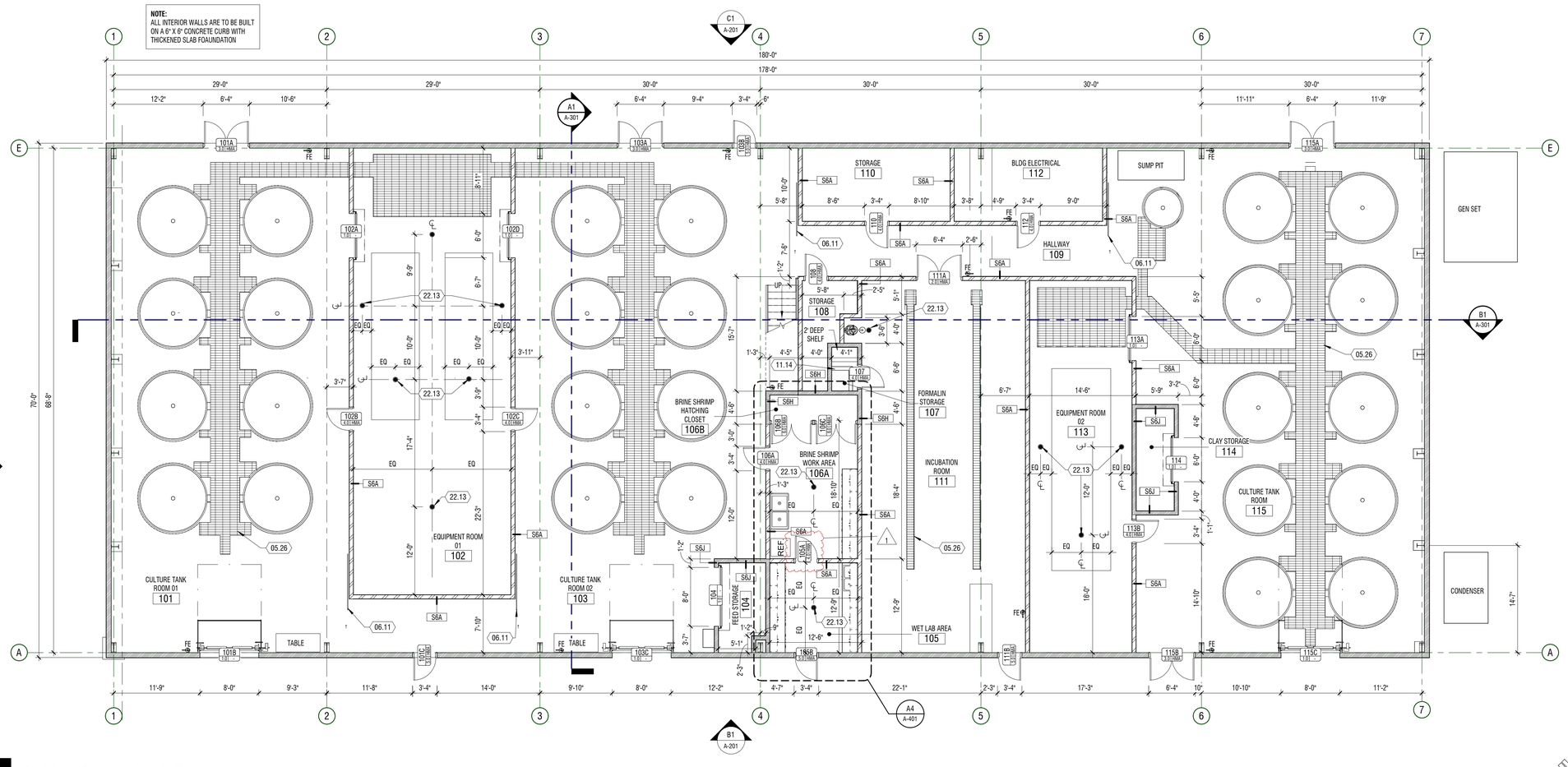

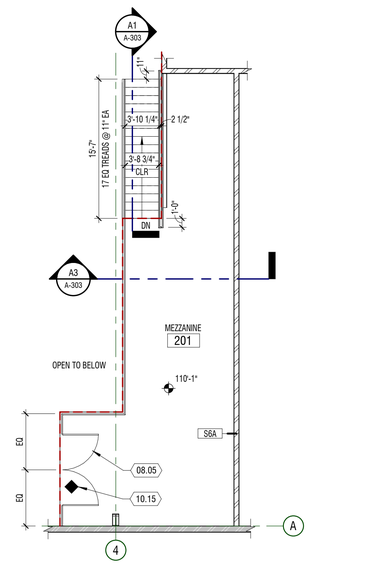

B5 MEZZANINE
1/8" = 1'-0"

NORTH

A1 PLAN - DIMENSIONS
1/8" = 1'-0"
LEVEL 01

NORTH

REVIEWED FOR CODE COMPLIANCE
Thomas W Peterson
12/14/2023
DIVISION OF FACILITIES CONSTRUCTION AND MANAGEMENT

DFCM CODE COMPLIANCE OFFICER

PUBLISHED		
1	DFCM REVIEW COMMENTS	11/15/23
NO.	REVISIONS	BY DATE

This document or any part therof in detail or design concept is the property of Forsgren Associates Inc. and shall not be copied without the written authroization of Forsgren Associates Inc.

DRAWN LOYND
DESIGNED
APPROVED LEMON
QA

ATTENTION
LINE IS 2-INCHES
AT 24"x36" SIZE
IF NOT 2-INCHES, SCALE DRAWINGS ACCORDINGLY

STATE OF UTAH — RYAN WAYNE LEMON — 8668330-0301 — LICENCED ARCHITECT

LOGAN FISH HATCHERY
UTAH DIVISION OF WILDLIFE RESOURCES
1465 WEST 200 NORTH
LOGAN, UTAH 84321

UTAH DNR WILDLIFE RESOURCES

design west | architects
255 SOUTH 300 WEST, LOGAN, UT 84321
PHONE: 435.752.7031

WARM WATER AQUACULTURE BUILDING
LOGAN HATCHERY IMPROVMENT PROJECT
PLAN - DIMENSIONS

PROJECT NO: 822249
SHEET NO: A-101
DATE: 8-2023
PAGE NO: 12

GENERAL NOTES

1. ROOM FINISH TAGS FOR EACH ROOM REPRESENT TYPICAL FINISHES. SPECIFIC WALLS IN SELECTED AREAS MAY HAVE MULTIPLE FINISHES WHICH WILL BE INDICATED IN INTERIOR ELEVATIONS.
2. SEE INTERIOR ELEVATIONS FOR ADDITIONAL FINISH INFORMATION
3. SEE REFLECTED CEILING PLANS FOR ADDITIONAL FINISH INFORMATION
4. FOR FINISH LEGEND SEE A-591
5. SEALED CONCRETE DOES EXTEND UNDER CASEWORK OR MILLWORK
6. FIELD VERIFY ALL DIMENSIONS PRIOR TO FABRICATION OF CASEWORK AND FINISH ASSEMBLIES

LEGEND

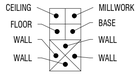

ROOM FINISH TAG

C1 — FINISH TAG - INDICATES SPECIFIC APPLIED FINISH

C1 — INDICATES FINISH IS APPLIED TO AREA BETWEEN ARROWS

C1 — INDICATES FINISH IS APPLIED TO FACE OF SURFACE(S)

CG — INDICATES CORNER GUARD

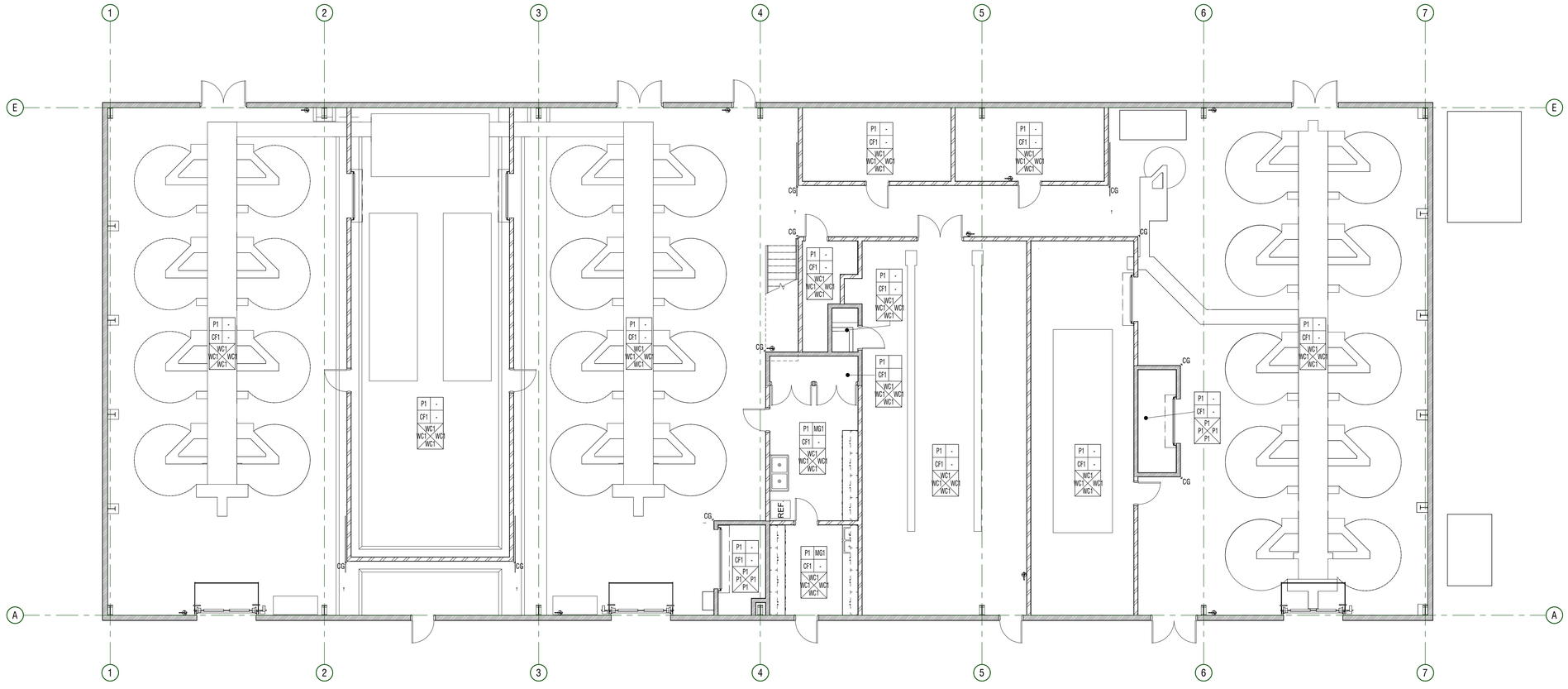

A1 PLAN - FINISHES

1/8" = 1'-0" LEVEL 01

REVIEWED FOR CODE COMPLIANCE
Thomas W Peterson
12/14/2023
DIVISION OF FACILITIES CONSTRUCTION AND MANAGEMENT

DFCM CODE COMPLIANCE OFFICER

PUBLISHED		
NO.	REVISIONS	BY DATE

This document or any part therof in detail or design concept is the property of Forsgren Associates Inc. and shall not be copied without the written authroization of Forsgren Associates Inc.

DRAWN LOYND
DESIGNED
APPROVED LEMON
QA

ATTENTION
LINE IS 2-INCHES
AT 24"x36" SIZE
IF NOT 2-INCHES, SCALE DRAWINGS ACCORDINGLY

STATE OF UTAH
RYAN WAYNE LEMON
8668330-0301
LICENCED ARCHITECT

LOGAN FISH HATCHERY
UTAH DIVISION OF WILDLIFE RESOURCES
1465 WEST 200 NORTH
LOGAN, UTAH 84321

UTAH DNR WILDLIFE RESOURCES

design west | architects
255 SOUTH 300 WEST, LOGAN, UT 84321
PHONE: 435.752.7031

WARM WATER AQUACULTURE BUILDING
LOGAN HATCHERY IMPROVMENT PROJECT
PLAN - FINISHES

PROJECT NO: 822249
SHEET NO: A-102
DATE: 8-2023
PAGE NO: 13

KEYNOTES (#)

MARK	DESCRIPTION
05.06	STEEL STRUCTURE (SEE STRUCTURAL)
23.05	FAN - SEE MECHANICAL DRAWINGS
23.06	UNIT HEATER - SEE MECHANICAL DRAWINGS
26.03	EXTERIOR WALL MOUNTED FIXTURES - SEE ELELECTRICAL DRAWINGS

LEGEND

MATERIALS

PAINTED GYPSUM BOARD CEILINGS TYPICAL, U.N.O.

SYMBOLS

LIGHTING FIXTURES:

LINEAR FIXTURES - SEE ELECTRICAL

PROCESS EQUIPMENT FIXTURE (PER MANUFACTURER)

EXTERIOR WALL SCONCE

SENSORS/SIGNS/ELEC./DATA:

EXIT SIGN - SEE ELECTRICAL DRAWINGS

OCCUPANCY SENSOR

AIR GRILLES/ACCESS PANELS:

EXHAUST

SUPPLY / FRESH

RETURN / RELIEF

ACCESS PANEL

GENERAL NOTES

1. KEYNOTES: (#) THE FIRST TWO NUMBERS REPRESENT THE RELATED CSI MASTER FORMAT DIVISION. THE SECOND SET OF NUMBERS REPRESENTS AN IDENTIFYING MARK VALUE. NOT ALL VALUES MAY BE USED OR OCCUR IN THE DOCUMENT SET.

   ADDITIONALLY, KEYNOTES RETAIN THEIR ASSIGNED VALUE UNIVERSALLY THROUGHOUT THE SET. THE KEYNOTES LISTED BELOW, REPRESENT THE KEYNOTES FOUND AND UTILIZED ON THIS SHEET AND EACH LIST WILL DIFFER RESPECTIVE TO ITS' SHEET. THEREFORE, BASED ON ACTUAL KEYNOTES UTILIZED ON A GIVEN SHEET OF DRAWINGS, GAPS IN THE SEQUENCING WILL OCCUR.
2. CONTRACTOR SHALL COORDINATE LAY-OUT OF STRUCTURAL, MECHANICAL, SPRINKLER AND ELECTRICAL. NOTIFY ARCHITECT OF ANY CONFLICTS.
3. ALL INTERIOR DIMENSIONS ARE TO/FROM FACE OF STUD / MASONRY. ALL EXTERIOR DIMENSIONS ARE TO/FROM FACE OF GRID/FOUNDATION. DIMENSIONS MARKED 'CLEAR' OR 'CLR' ARE FROM FACE OF FINISH TO FACE OF FINISH AND SHALL BE MAINTAINED AND CANNOT BE FIELD ADJUSTED WITHOUT PRIOR APPROVAL OF THE ARCHITECT.
4. SEE A-601 LEGEND FOR FINISH LEGEND
5. CEILING HEIGHT IS B.O. FINISHED CEILING HEIGHT ABOVE FINISHED FLOOR
6. MEASUREMENTS SPECIFYING "EQ" = EQUAL LENGTH OR WIDTH TO FILL REMAINDER OF LENGTH REQUIRED
7. CEILINGS WITH NO DIRECT MEASUREMENTS, ASSUME CEILING TO BE EQUALLY DISTANCED ON ALL SIDES OF ROOM
8. FIXTURES IN OPEN TO STRUCTURE AREAS ARE DIMENSIONED FROM WALL OR CENTERLINE OF ROOM
9. LIGHT FIXTURES WITH NO DIMENSIONS ARE TO BE CENTERED ON ROOM UNLESS OTHERWISE NOTED
10. FIXTURES ON GRID SHALL BE IN LINE WITH GRID CENTER ON CENTER UNLESS OTHERWISE NOTED
11. MOTION DETECTORS, LIGHT SENSORS, ETC. ARE TO BE CENTERED IN THE PANEL.

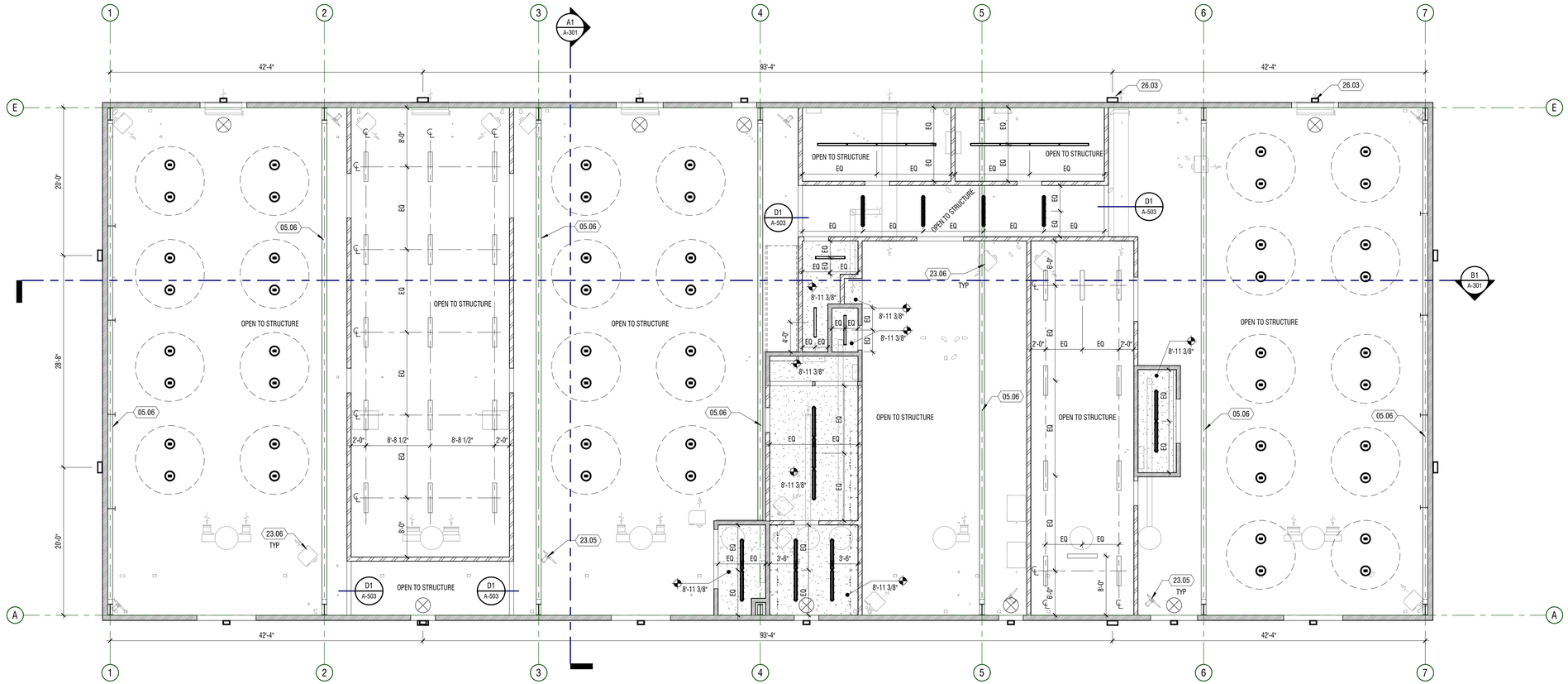

A1 PLAN - REFLECTED CEILINGS

1/8" = 1'-0"

NORTH

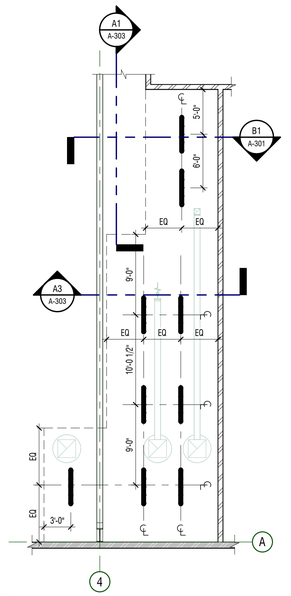

B5 PLAN - REFLECTED CEILINGS

1/8" = 1'-0"

NORTH

REVIEWED FOR CODE COMPLIANCE
Thomas W Peterson
12/14/2023
DIVISION OF FACILITIES CONSTRUCTION AND MANAGEMENT

DFCM CODE COMPLIANCE OFFICER

PUBLISHED		
NO.	REVISIONS	BY DATE

This document or any part therof in detail or design concept is the property of Forsgren Associates Inc. and shall not be copied without the written authroization of Forsgren Associates Inc.

DRAWN LOYND
DESIGNED
APPROVED LEMON
QA

ATTENTION
LINE IS 2-INCHES
AT 24"x36" SIZE
IF NOT 2-INCHES, SCALE DRAWINGS ACCORDINGLY

STATE OF UTAH
RYAN WAYNE LEMON
8668330-0301
LICENSED ARCHITECT

LOGAN FISH HATCHERY
UTAH DIVISION OF WILDLIFE RESOURCES
1465 WEST 200 NORTH
LOGAN, UTAH 84321

UTAH DNR WILDLIFE RESOURCES

design west | architects
255 SOUTH 300 WEST, LOGAN, UT 84321
PHONE: 435.752.7031

WARM WATER AQUACULTURE BUILDING
LOGAN HATCHERY IMPROVMENT PROJECT
PLAN - REFLECTED CEILINGS

PROJECT NO: 822249
SHEET NO: A-103
DATE: 8-2023
PAGE NO: 14

GENERAL NOTES

1. KEYNOTES: THE FIRST TWO NUMBERS REPRESENT THE RELATED CSI MASTER FORMAT DIVISION. THE SECOND SET OF NUMBERS REPRESENTS AN IDENTIFYING MARK VALUE. NOT ALL VALUES MAY BE USED OR OCCUR IN THE DOCUMENT SET.

   ADDITIONALLY, KEYNOTES RETAIN THEIR ASSIGNED VALUE UNIVERSALLY THROUGHOUT THE SET. THE KEYNOTES LISTED BELOW, REPRESENT THE KEYNOTES FOUND AND UTILIZED ON THIS SHEET AND EACH LIST WILL DIFFER RESPECTIVE TO ITS' SHEET. THEREFORE, BASED ON ACTUAL KEYNOTES UTILIZED ON A GIVEN SHEET OF DRAWINGS, GAPS IN THE SEQUENCING WILL OCCUR.

2. CONTRACTOR SHALL VERIFY LAY-OUT OF STRUCTURAL, MECHANICAL, AND ELECTRICAL.

3. ALL INTERIOR DIMENSIONS ARE TO/FROM FACE OF STUD / MASONRY. ALL EXTERIOR DIMENSIONS ARE TO/FROM FACE OF GRID/FOUNDATION. DIMENSIONS MARKED 'CLEAR' OR 'CLR' ARE FROM FACE OF FINISH TO FACE OF FINISH AND SHALL BE MAINTAINED AND CANNOT BE FIELD ADJUSTED WITHOUT PRIOR APPROVAL OF THE ARCHITECT.

4. PLAN INDICATES MAJOR ROOF PENETRATIONS. THIS DOES NOT REPRESENT ALL PENETRATIONS BY UTILITIES. SEE MECHANICAL AND PLUMBING PLANS FOR ADDITIONAL INFORMATION.

5. ALL MECHANICAL AND OTHER PENETRATIONS SHALL BE FLASHED ACCORDING TO ROOF MANUFACTURER STANDARDS AND SPECIFICATIONS TO MAINTAIN ROOF MEMBRANE WARRANTY, PENETRATION LOCATIONS TO BE COORDINATED WITH MANUFACTURE PRIOR TO INSTALLATION. PITCH POCKETS ARE **NOT** ALLOWED

6. PROVIDE ELECTROLYSIS SEPARATION BETWEEN DISSIMILAR MATERIAL CONNECTIONS

7. CRICKETS SHOWN IN ROOF PLAN MAY NOT BE REFLECTED IN BUILDING SECTIONS OR DETAILS

8. ALL FIELDS SLOPE TO ROOF DRAINS. CRICKETS SHOWN ARE FOR GENERAL REFERENCE AND MAY NOT INCLUDE ALL SITUATIONS WHERE CRICKETS ARE REQUIRED. INSTALLER IS RESPONSIBLE TO CRICKET AS REQUIRED TO PREVENT UNNECESSARY BUILD-UP OR DAMMING OF WATER ALONG WALLS, CURBS, ETC.

KEYNOTES

MARK	DESCRIPTION
23.07	ROOF EXHAST FAN. SEE MECHANICAL DRAWINGS
26.03	EXTERIOR WALL MOUNTED FIXTURES - SEE ELELECTRICAL DRAWINGS

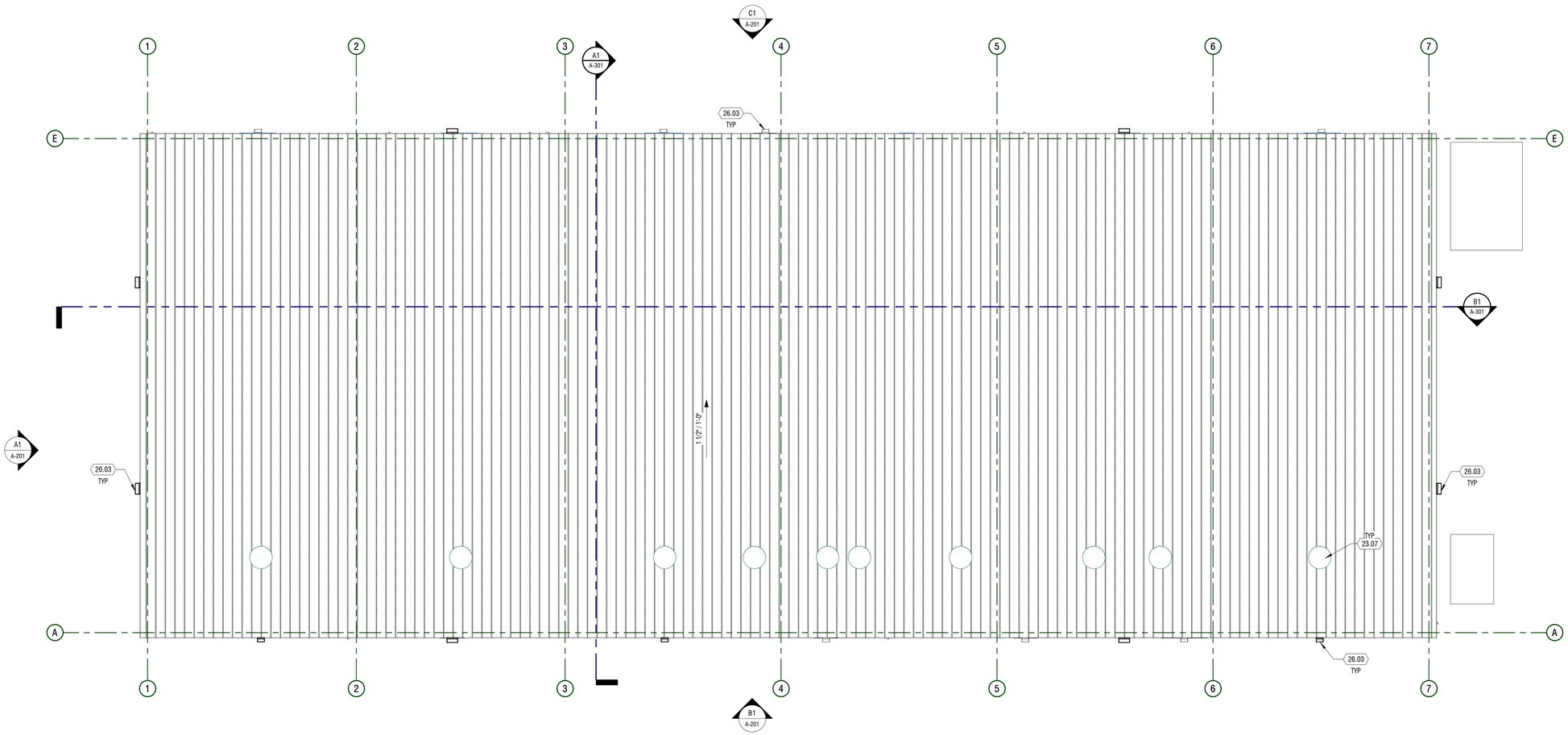

A1 ROOF PLAN

1/8" = 1'-0"

REVIEWED FOR CODE COMPLIANCE
Thomas W Peterson
12/14/2023
DIVISION OF FACILITIES CONSTRUCTION AND MANAGEMENT

DFCM CODE COMPLIANCE OFFICER

PUBLISHED

NO.	REVISIONS	BY DATE

This document or any part therof in detail or design concept is the property of Forsgren Associates Inc. and shall not be copied without the written authroization of Forsgren Associates Inc.

DRAWN LOYND
DESIGNED
APPROVED LEMON
QA

ATTENTION
LINE IS 2-INCHES
AT 24"x36" SIZE
IF NOT 2-INCHES,
SCALE DRAWINGS ACCORDINGLY

STATE OF UTAH
RYAN WAYNE LEMON
8668330-0301
LICENCED ARCHITECT

LOGAN FISH HATCHERY
UTAH DIVISION OF WILDLIFE RESOURCES
1465 WEST 200 NORTH
LOGAN, UTAH 84321

UTAH DNR WILDLIFE RESOURCES

design west | architects
255 SOUTH 300 WEST, LOGAN, UT 84321
PHONE: 435.752.7031

WARM WATER AQUACULTURE BUILDING
LOGAN HATCHERY IMPROVMENT PROJECT

PLAN - ROOF

PROJECT NO: 822249
SHEET NO: A-104
DATE: 8-2023
PAGE NO: 15

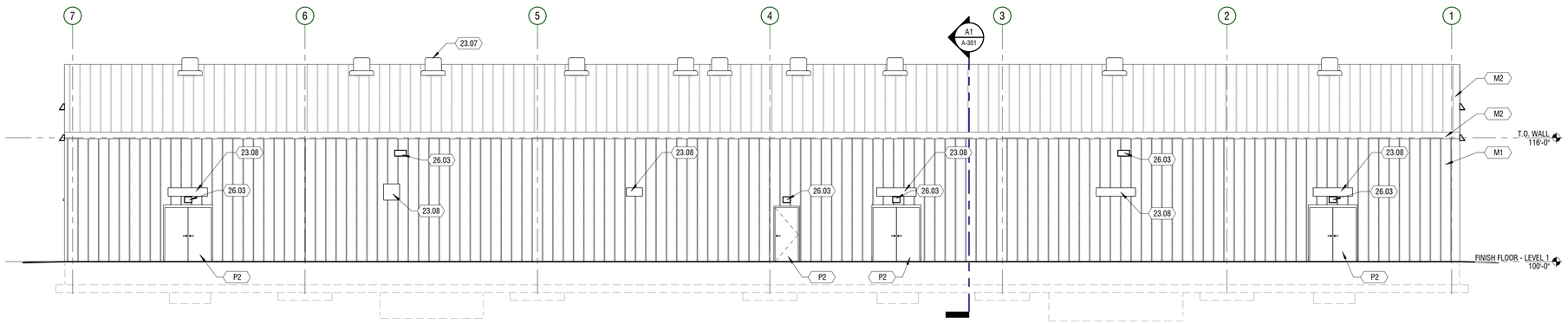

C1 ELEVATION

1/8" = 1'-0" EAST

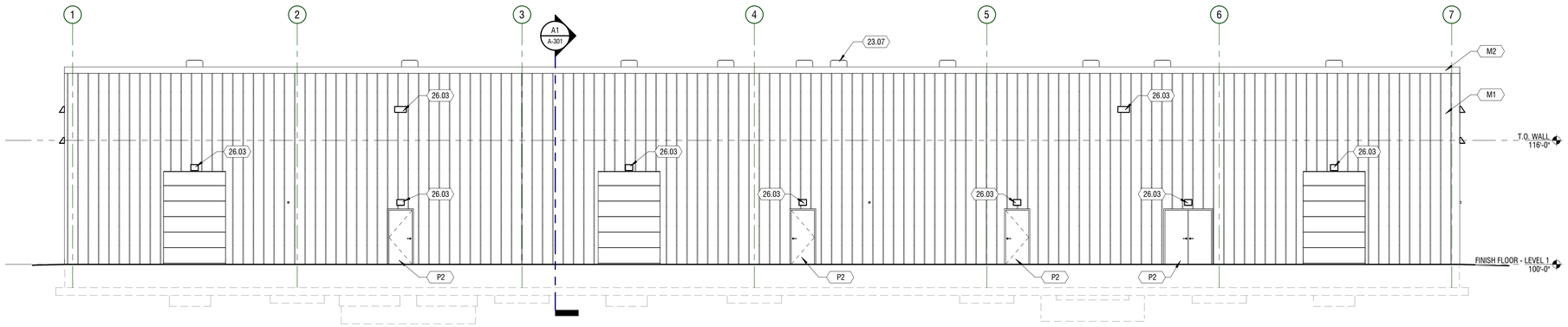

B1 ELEVATION

1/8" = 1'-0" WEST

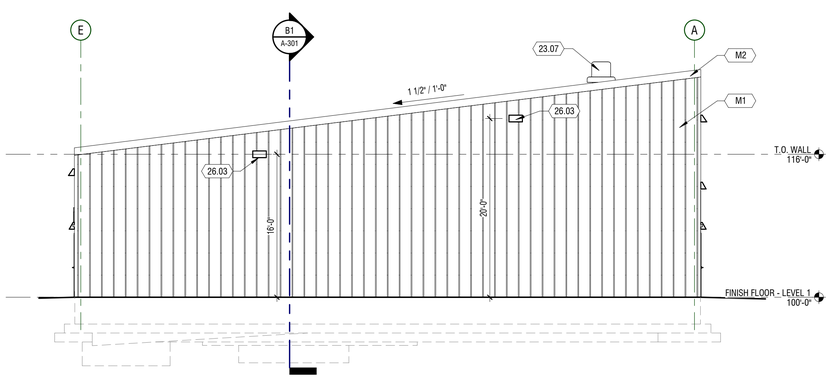

A1 ELEVATION

1/8" = 1'-0" NORTH

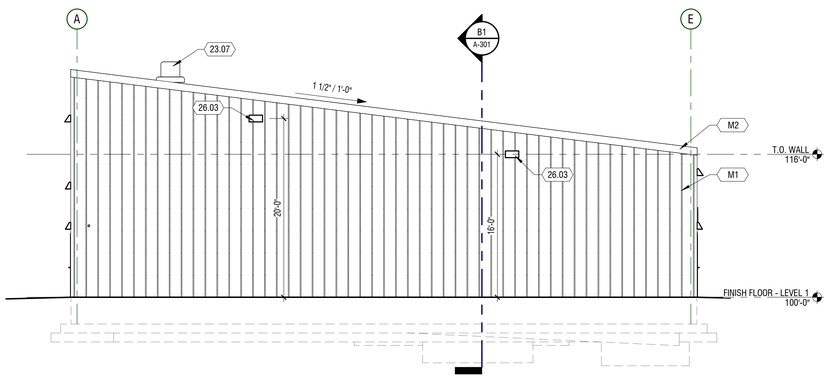

A3 ELEVATION

1/8" = 1'-0" SOUTH

EXTERIOR MATERIALS

MARK	DESCRIPTION	MFR / STYLE	COLOR
M1	EXPOSED FASTENER METAL PANELS	MBCI / PBR	ALMOND
M2	STANDING SEAM METAL ROOF AND TRIM	MBCI	BURNISHED SLATE
P2	PAINTED DOOR AND FRAME - SEE FINISH SCHEDULE	-	-

KEYNOTES

MARK	DESCRIPTION
23.07	ROOF EXHAST FAN. SEE MECHANICAL DRAWINGS
23.08	EXTERIOR AIR TERMINALS. SEE MECHANICAL DRAWINGS
26.03	EXTERIOR WALL MOUNTED FIXTURES - SEE ELELECTRICAL DRAWINGS

REVIEWED FOR CODE COMPLIANCE
Thomas W Peterson
12/14/2023
DIVISION OF FACILITIES CONSTRUCTION AND MANAGEMENT

DFCM CODE COMPLIANCE OFFICER

NO.	REVISIONS	BY	DATE
	PUBLISHED		

This document or any part therof in detail or design concept is the property of Forsgren Associates Inc. and shall not be copied without the written authroization of Forsgren Associates Inc.

DRAWN LOYND
DESIGNED
APPROVED LEMON
QA

ATTENTION
LINE IS 2-INCHES
AT 24"x36" SIZE
IF NOT 2-INCHES, SCALE DRAWINGS ACCORDINGLY

STATE OF UTAH
RYAN WAYNE LEMON
8668330-0301
LICENCED ARCHITECT

LOGAN FISH HATCHERY
UTAH DIVISION OF WILDLIFE RESOURCES
1465 WEST 200 NORTH
LOGAN, UTAH 84321

UTAH DNR WILDLIFE RESOURCES

design west | architects
255 SOUTH 300 WEST, LOGAN, UT 84321
PHONE: 435.752.7031

WARM WATER AQUACULTURE BUILDING
LOGAN HATCHERY IMPROVMENT PROJECT
ELEVATIONS

PROJECT NO: 822249
SHEET NO: A-201
DATE: 8-2023
PAGE NO: 16

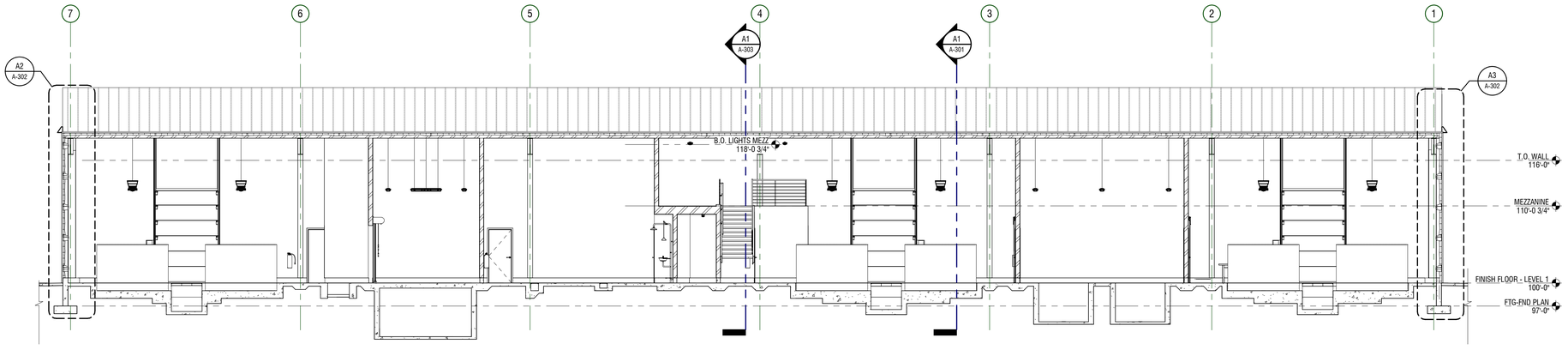

B1 BUILDING SECTION

1/8" = 1'-0" EAST - WEST

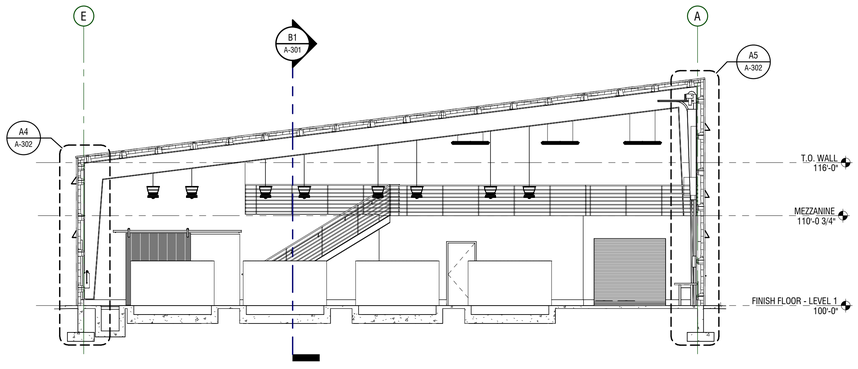

A1 BUILDING SECTION

1/8" = 1'-0" NORTH - SOUTH

REVIEWED FOR CODE COMPLIANCE
Thomas W Peterson
12/14/2023
DIVISION OF FACILITIES CONSTRUCTION AND MANAGEMENT

DFCM CODE COMPLIANCE OFFICER

NO.	REVISIONS	BY DATE
	PUBLISHED	

This document or any part therof in detail or design concept is the property of Forsgren Associates Inc. and shall not be copied without the written authroization of Forsgren Associates Inc.

DRAWN LOYND
DESIGNED
APPROVED LEMON
QA

ATTENTION
LINE IS 2-INCHES
AT 24"x36" SIZE
IF NOT 2-INCHES,
SCALE DRAWINGS ACCORDINGLY

STATE OF UTAH
RYAN WAYNE LEMON
8668330-0301
LICENSED ARCHITECT

LOGAN FISH HATCHERY
UTAH DIVISION OF WILDLIFE RESOURCES
1465 WEST 200 NORTH
LOGAN, UTAH 84321

UTAH DNR WILDLIFE RESOURCES

design west | architects
255 SOUTH 300 WEST, LOGAN, UT 84321
PHONE: 435.752.7031

WARM WATER AQUACULTURE BUILDING
LOGAN HATCHERY IMPROVMENT PROJECT
SECTIONS - BUILDING

PROJECT NO: 822249
SHEET NO: A-301
DATE: 8-2023
PAGE NO: 17

KEYNOTES

MARK	DESCRIPTION
03.01	5" REINFORCED CONCRETE SLAB ON GRADE, SEE STRUCT
03.02	CONCRETE FOOTING - SEE STRUCTURAL DRAWINGS
03.03	8" CONCRETE FOUNDATION WALL - EXTEND 8" ABOVE FINISH FLOOR
05.01	8" METAL GIRT FRAMING
05.04	METAL SIDING
05.05	STEEL ROOF DECK
05.06	STEEL STRUCTURE (SEE STRUCTURAL)
07.18	SPRAY APPLIED CLOSED CELL THERMAL INSULATION
07.19	EXPOSED FASTENER METAL PANELS
31.01	SIDEWALK/GRADE

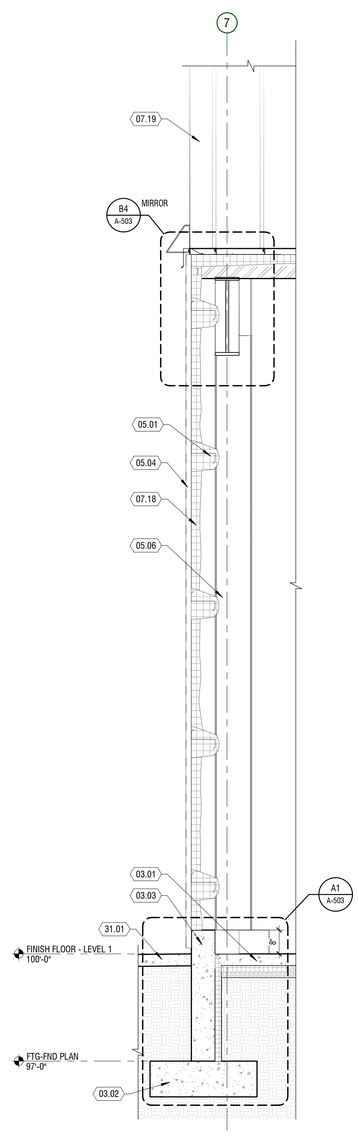

A2 WALL SECTION

1/2" = 1'-0"

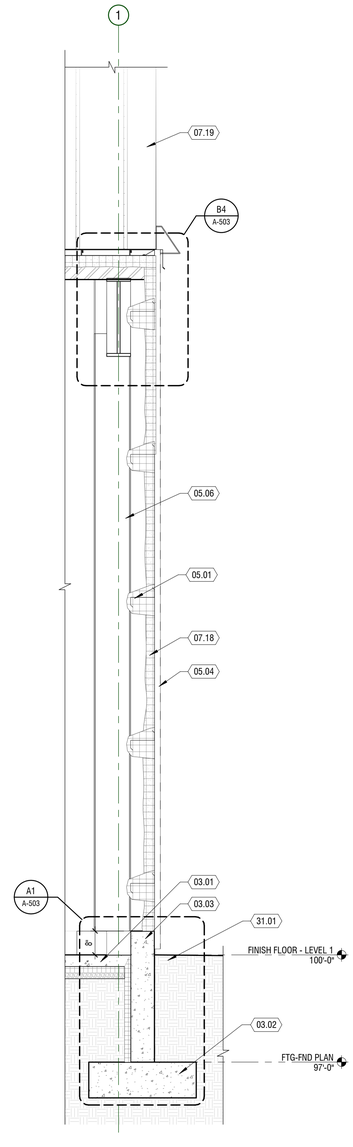

A3 WALL SECTION

1/2" = 1'-0"

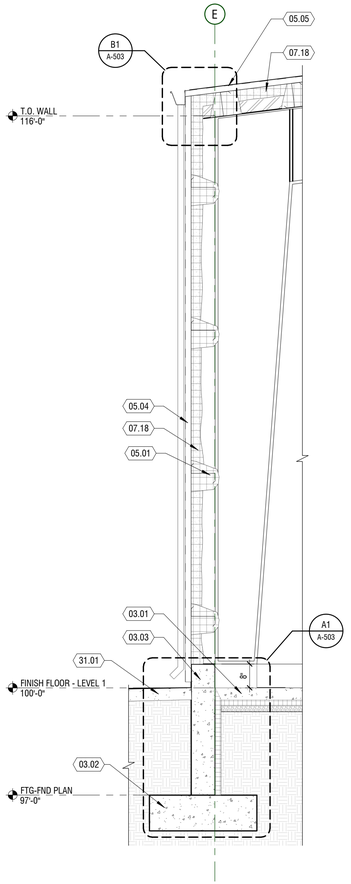

A4 WALL SECTION

1/2" = 1'-0"

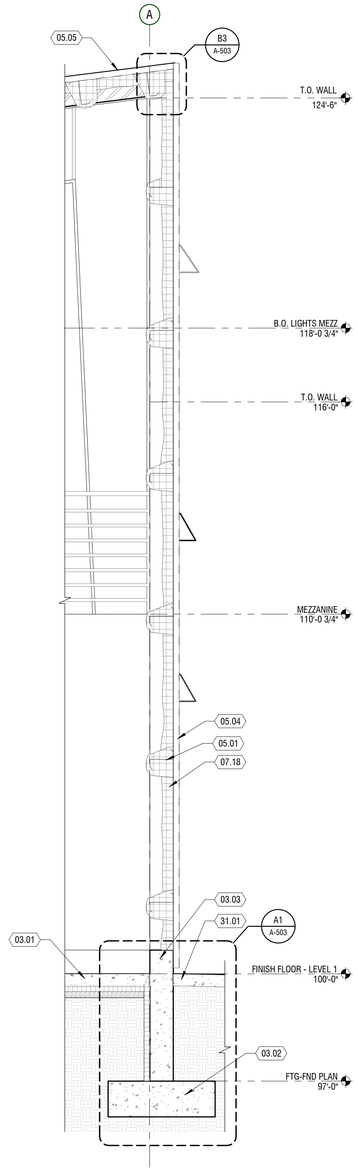

A5 WALL SECTION

1/2" = 1'-0"

REVIEWED FOR CODE COMPLIANCE
Thomas W Peterson
12/14/2023
DIVISION OF FACILITIES CONSTRUCTION AND MANAGEMENT

DFCM CODE COMPLIANCE OFFICER

NO.	REVISIONS	BY DATE
	PUBLISHED	

This document or any part therof in detail or design concept is the property of Forsgren Associates Inc. and shall not be copied without the written authroization of Forsgren Associates Inc.

DRAWN LOYND
DESIGNED
APPROVED LEMON
QA

ATTENTION
LINE IS 2-INCHES
AT 24"x36" SIZE
IF NOT 2-INCHES,
SCALE DRAWINGS ACCORDINGLY

STATE OF UTAH
RYAN WAYNE LEMON
8668330-0301
LICENCED ARCHITECT

LOGAN FISH HATCHERY
UTAH DIVISION OF WILDLIFE RESOURCES
1465 WEST 200 NORTH
LOGAN, UTAH 84321

UTAH DNR WILDLIFE RESOURCES

design west | architects
255 SOUTH 300 WEST, LOGAN, UT 84321
PHONE: 435.752.7031

WARM WATER AQUACULTURE BUILDING
LOGAN HATCHERY IMPROVMENT PROJECT
SECTIONS - WALL

PROJECT NO: 822249
SHEET NO: A-302
DATE: 8-2023
PAGE NO: 18

KEYNOTES

MARK	DESCRIPTION
03.01	5" REINFORCED CONCRETE SLAB ON GRADE, SEE STRUCT
05.02	6" METAL STUD FRAMING @ 16" O.C.
05.03	12" METAL FLOOR JOISTS @ 16" O.C.
06.01	PLYWOOD SHEATHING
09.01	1/2" VINYL WALL COVERING
09.05	5/8" GYPSUM BOARD

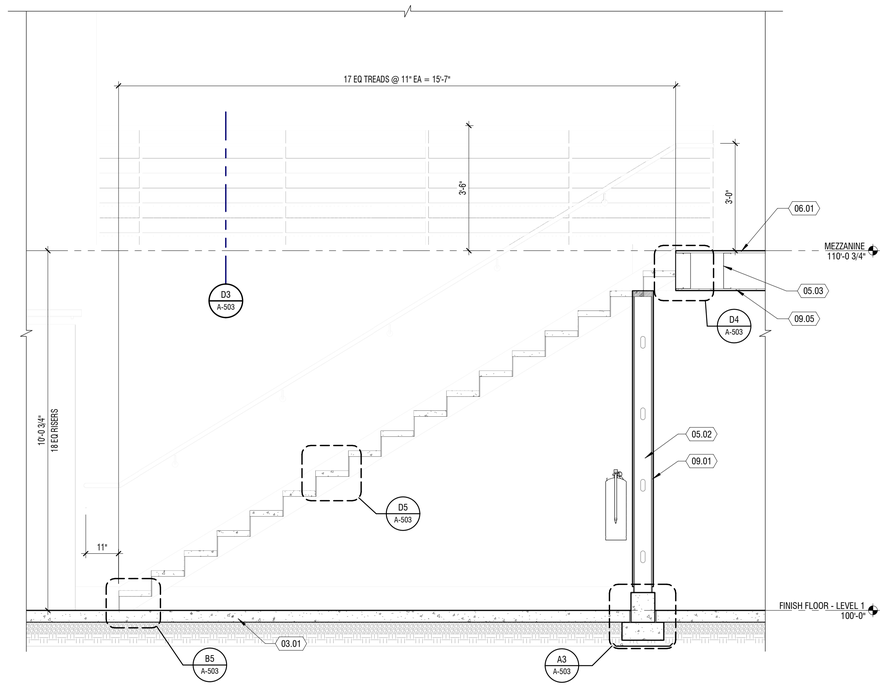

A1 STAIR SECTION

1/2" = 1'-0"

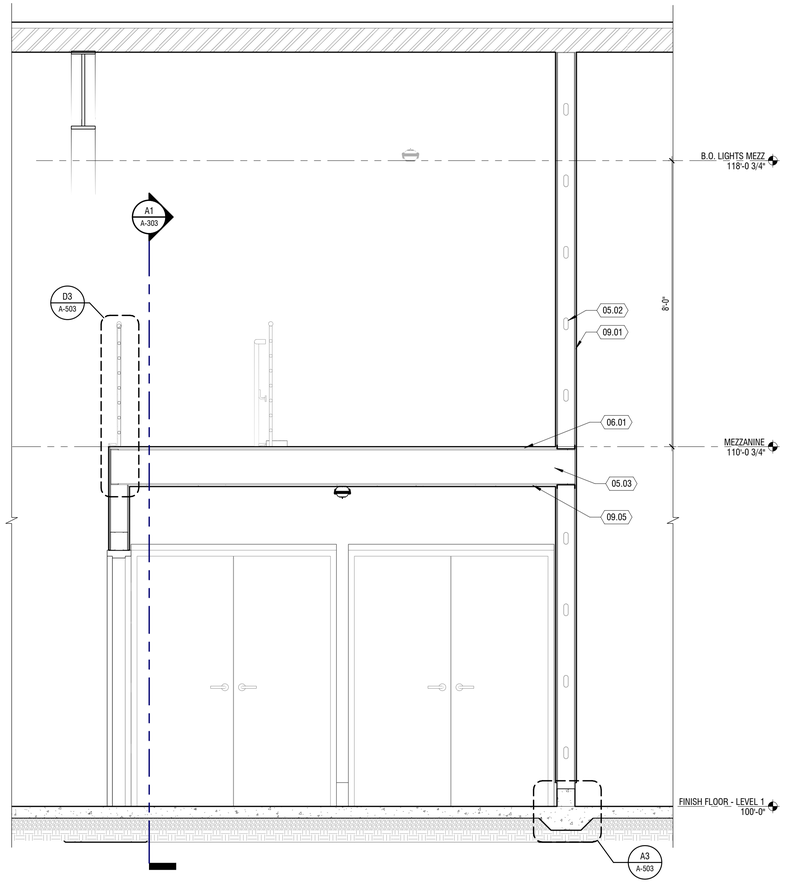

A3 WALL SECTION

1/2" = 1'-0"

REVIEWED FOR CODE COMPLIANCE
Thomas W Peterson
12/14/2023
DIVISION OF FACILITIES CONSTRUCTION AND MANAGEMENT

DFCM CODE COMPLIANCE OFFICER

NO.	REVISIONS	BY DATE
	PUBLISHED	

This document or any part therof in detail or design concept is the property of Forsgren Associates Inc. and shall not be copied without the written authroization of Forsgren Associates Inc.

DRAWN LOYND
DESIGNED
APPROVED LEMON
QA

ATTENTION
LINE IS 2-INCHES
AT 24"x36" SIZE
IF NOT 2-INCHES,
SCALE DRAWINGS ACCORDINGLY

STATE OF UTAH
RYAN WAYNE LEMON
6668330-0301
LICENCED ARCHITECT

LOGAN FISH HATCHERY
UTAH DIVISION OF WILDLIFE RESOURCES
1465 WEST 200 NORTH
LOGAN, UTAH 84321

UTAH DNR WILDLIFE RESOURCES

design west | architects
255 SOUTH 300 WEST, LOGAN, UT 84321
PHONE: 435.752.7031

WARM WATER AQUACULTURE BUILDING
LOGAN HATCHERY IMPROVMENT PROJECT
SECTIONS - WALL

PROJECT NO: 822249
SHEET NO: A-303
DATE: 8-2023
PAGE NO: 19

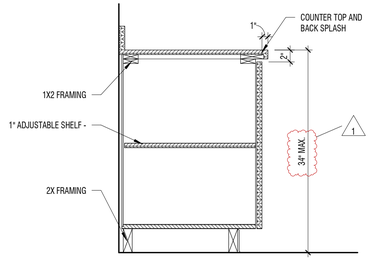

C1 BASE CABINET

1" = 1'-0"

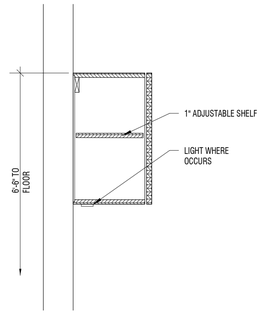

C2 UPPER CABINET

1" = 1'-0"

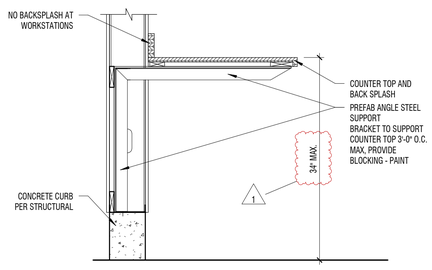

B1 COUNTER SUPPORT

1" = 1'-0"

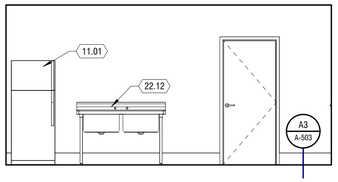

B2 ELEVATION

1/4" = 1'-0"

BRINE SHRIMP WORK AREA 106A

B3 ELEVATION

1/4" = 1'-0"

BRINE SHRIMP WORK AREA 106A

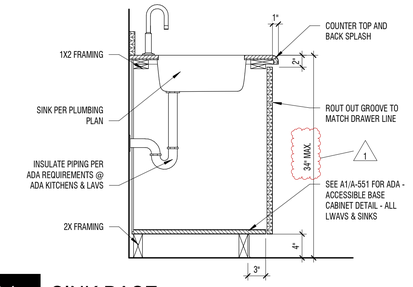

A1 SINK BASE

1" = 1'-0"

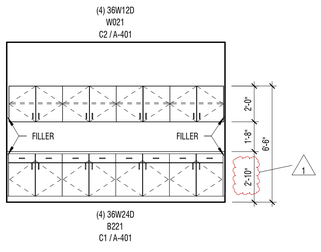

A2 ELEVATION

1/4" = 1'-0"

WET LAB AREA 105

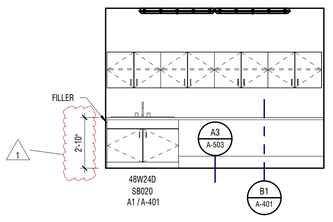

A3 ELEVATION

1/4" = 1'-0"

WET LAB AREA 105

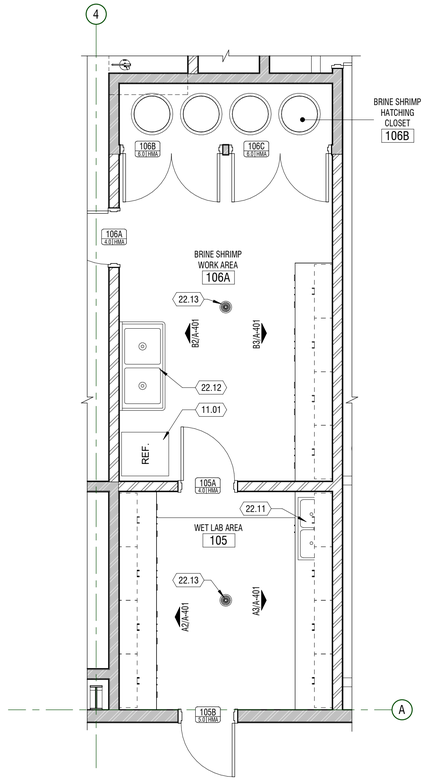

A4 ENLARGED PLAN

1/4" = 1'-0"

GENERAL NOTES

1. KEYNOTES: THE FIRST TWO NUMBERS REPRESENT THE RELATED CSI MASTERFORMAT DIVISION. THE SECOND SET OF NUMBERS REPRESENTS AN IDENTIFYING MARK VALUE. NOT ALL VALUES MAY BE USED OR OCCUR IN THE DOCUMENT SET.

   ADDITIONALLY, KEYNOTES RETAIN THEIR ASSIGNED VALUE UNIVERSALLY THROUGHOUT THE SET. THE KEYNOTES LISTED BELOW, REPRESENT THE KEYNOTES FOUND AND UTILIZED ON THIS SHEET AND EACH LIST WILL DIFFER RESPECTIVE TO ITS' SHEET. THEREFORE, BASED ON ACTUAL KEYNOTES UTILIZED ON A GIVEN SHEET OF DRAWINGS, GAPS IN THE SEQUENCING WILL OCCUR.

2. CONTRACTOR SHALL VERIFY LAY-OUT OF STRUCTURAL, MECHANICAL, AND ELECTRICAL.

3. ALL INTERIOR DIMENSIONS ARE TO/FROM FACE OF STUD / MASONRY. ALL EXTERIOR DIMENSIONS ARE TO/FROM FACE OF GRID/FOUNDATION. DIMENSIONS MARKED 'CLEAR' OR 'CLR' ARE FROM FACE OF FINISH TO FACE OF FINISH AND SHALL BE MAINTAINED AND CANNOT BE FIELD ADJUSTED WITHOUT PRIOR APPROVAL OF THE ARCHITECT.

4. A1/A-101 INDICATES INTERIOR ROOM ELEVATIONS ON SHEET REFERENCED

KEYNOTES ⟨#⟩

MARK	DESCRIPTION
11.01	REFRIGERATOR - OWNER PROVIDED / OWNER INSTALLED
22.11	SINK - SEE PLUMBING DRAWINGS
22.12	STAND-ALONE STAINLESS STEEL SINK - SEE PLUMBING DRAWINGS
22.13	FLOOR DRAIN. SEE PLUMBING DRAWINGS

CASEWORK KEY

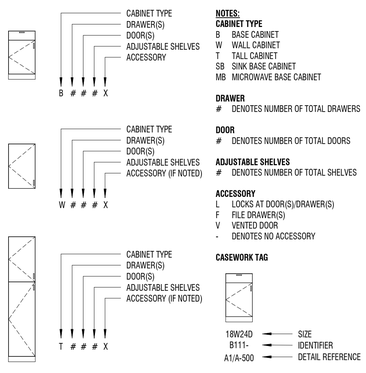

REVIEWED FOR CODE COMPLIANCE
Thomas W Peterson
12/14/2023
DIVISION OF FACILITIES CONSTRUCTION AND MANAGEMENT

DFCM CODE COMPLIANCE OFFICER

PUBLISHED

NO.	REVISIONS	BY DATE
1	DFCM REVIEW COMMENTS	11/15/23

This document or any part therof in detail or design concept is the property of Forsgren Associates Inc. and shall not be copied without the written authroization of Forsgren Associates Inc.

DRAWN Author
DESIGNED Designer
APPROVED Checker
QA

ATTENTION
LINE IS 2-INCHES
AT 24"x36" SIZE
IF NOT 2-INCHES, SCALE DRAWINGS ACCORDINGLY

STATE OF UTAH
RYAN WAYNE LEMON
8668330-0301
LICENCED ARCHITECT

LOGAN FISH HATCHERY
UTAH DIVISION OF WILDLIFE RESOURCES
1465 WEST 200 NORTH
LOGAN, UTAH 84321

UTAH DNR WILDLIFE RESOURCES

design west | architects
255 SOUTH 300 WEST, LOGAN, UT 84321
PHONE: 435.752.7031

WARM WATER AQUACULTURE BUILDING
LOGAN HATCHERY IMPROVMENT PROJECT

ENLARGED PLANS

PROJECT NO: 822249
SHEET NO: A-401
DATE: 8-2023
PAGE NO: 20

DOOR HARDWARE

SET:1.0		DOORS: 101B, 102A, 102D, 103C, 104, 113A, 114, 115C	
-	HARDWARE BY DOOR MANUFACTURER	-	-

SET:2.0		DOORS: 111A	
6	HINGE	5BB1 4.5 X 4.5 NRP	626	IVE
2	MANUAL FLUSH BOLT	FB458	626	IVE
1	PASSAGE	T581L6 QUA	626	FAL
1	STRIKE	10-026	626	SCH
2	OH STOP	90S	630	GLY
1	ASTRAGAL	43SP	SP	ZER
2	SILENCER	SR64	GRY	IVE

SET:3.0		DOORS: 101A,103A,115A,115B		
6	HINGE	5BB1 4.5 X 4.5	626	IVE
2	MANUAL FLUSH BOLT	FB458	626	IVE
1	DUST PROOF STRIKE	DP2	626	IVE
1	ENTRANCE	QL81 153053 SN GRADE 1	626	ARR
1	CYLINDER	KIK K001 WR US4 105169	626	WEI
1	STRIKE	10-026	626	SCH
1	SURFACE CLOSER	SC71 FA	626	FAL
2	KICK PLATE	8400 10" X 34" LDW B-CS	630	IVE
1	GASKETING	188S-BK	S-BK	ZER
1	SECURITY ASTRAGAL	43SP (ACTIVE LEAF, PULL SIDE)	600	ZER
1	DOOR SWEEP	39A	A	ZER
1	THERSHOLD	656A	A	ZER

SET:4.0		DOORS: 102B, 102C, 105A, 106A, 107, 108, 110, 112, 113B		
3	HINGE	5BB1 4.5 X 4.5	652	IVE
1	PASSAGE	T521G7 DAN	626	FAL
2	KICK PLATE	8400 10" X 34" LDW B-CS	630	IVE
1	FLOOR STOP OR WALL BUMPER	FS 439 OR WS402	626	IVE
3	SILENCER	SR64	GRY	IVE
1	STRIKE	10-026	626	SCH

SET:5.0		DOOR: ,101C, 103B, 105B, 111B		
3	HINGE	5BB1 4.5 X 4.5	626	IVE
1	ENTRANCE	QL81 153053 SN GRADE 1	626	ARR
1	CYLINDER	KIK K001 WR US4 105169	626	WEI
1	STRIKE	10-026	626	SCH
1	KICK PLATE	8400 10" X 34" LDW B-CS	630	IVE
1	SURFACE CLOSER	SC71 FA	626	FAL
1	GASKETING	188S-BK	S-BK	ZER
1	DOOR SWEEP	39A	A	ZER
1	THRESHOLD	655A	A	ZER

SET:6.0		DOOR: ,106B, 106C		
6	HINGE	5BB1 4.5 X 4.5	626	IVE
2	MANUAL FLUSH BOLTS	FB458	626	IVE
1	PASSAGE	T581GD7 DAN	626	FAL
1	STRIKE	10-026	626	SCH
2	KICK PLATE	8400 10" X 34" LDW B-CS	630	IVE
1	GASKETING	188S-BK	S-BK	ZER
1	GASKETING	429AA-S	S-BK	ZER
1	DOOR SWEEP	39A	A	ZER

MANUFACTURERS
SUBJECT TO COMPLIANCE WITH REQUIREMENTS, PROVIDED PRODUCTS BY ONE OF THE FOLLOWING:

Hinges:	Ives, Hager, Stanley, McKinney
Locks and Latches:	Falcon, Sargent, Schlage, Adams Rite, Arrow
Cylinders and Cores:	Falcon, Sargent, Schlage, Weiser
Mechanical Door Closers:	Falcon, Sargent, LCN
Accessories and Trim:	Ives, Rockwood, Hager, Trinco
Overhead Stops and Holders:	Glynn Johnson, ABH
Saddle and Panic Thresholds:	Zero, National Guard, Pemko
Weather Strip and Gasket:	Zero, National Guard, Pemco
Miscellaneous Hardware:	Ives, Rockwood, Hager, Trimco
Emergency Access Key Box:	Knox, Inc

DOOR SCHEDULE

MARK	LEAF SIZING (1) W	H	D	DOOR TYPE (2)	CONSTRUCTION (3)	FINISH (4)	GLAZING (5)	RATING (6)	FRAME TYPE (7)	DETAILS (8) HEAD	JAMB	SILL	HARDWARE (9)	NOTES (10)
101A	6'-0"	7'-0"	1 3/4"	HM02	HMI	P2	-	-	HMA	C2/A-501	B2/A-501	A2/A-501	3.0	
101B	8'-0"	12'-0"	3 1/8"	OH01		PRE-FIN	-	REI 60	-	C4/A-501	B4/A-502	A4/A-502	1.0	
101C	3'-0"	7'-0"	1 3/4"	HM01	HMI	P2	-	-	HMA	C2/A-501	B2/A-501	A2/A-501	5.0	
102A	6'-0"	7'-6"	1"	OH02		PRE-FIN	-		-	C3/A-501	B3/A-501	-	1.0	
102B	3'-0"	7'-0"	1 3/4"	HM01	HM		-	-	HMA	C1/A-501	B1/A-501	-	4.0	
102C	3'-0"	7'-0"	1 3/4"	HM01	HM		-	-	HMA	C1/A-501	B1/A-501	-	4.0	
102D	6'-0"	7'-6"	1"	OH02		PRE-FIN	-		-	C3/A-501	B3/A-501	-	1.0	
103A	6'-0"	7'-0"	1 3/4"	HM02	HMI	P2	-	-	HMA	C2/A-501	B2/A-501	A2/A-501	3.0	
103B	3'-0"	7'-0"	1 3/4"	HM01	HMI	P2	-	-	HMA	C2/A-501	B2/A-501	A2/A-501	5.0	
103C	8'-0"	12'-0"	3 1/8"	OH01		PRE-FIN	-	REI 60	-	C4/A-501	B4/A-502	A4/A-502	1.0	
104	6'-0"	7'-6"	1"	OH02		PRE-FIN	-		-	C3/A-501	B3/A-501	-	1.0	
105A	3'-0"	7'-0"	1 3/4"	HM01	HM		-	-	HMA	C1/A-501	B1/A-501	-	4.0	
105B	3'-0"	7'-0"	1 3/4"	HM01	HMI	P2	-	-	HMA	C2/A-501	B2/A-501	A2/A-501	5.0	
106A	3'-0"	7'-0"	1 3/4"	HM01	HM		-	-	HMA	C1/A-501	B1/A-501	-	4.0	
106B	5'-5"	7'-0"	1 3/4"	HM02	HM		-	-	HMA	C1/A-501	B1/A-501	-	6.0	
106C	5'-5"	7'-0"	1 3/4"	HM02	HM		-	-	HMA	C1/A-501	B1/A-501	-	6.0	
107	3'-0"	7'-0"	1 3/4"	HM01	HM		-	-	HMA	C1/A-501	B1/A-501	-	4.0	
108	3'-0"	7'-0"	1 3/4"	HM01	HM		-	-	HMA	C1/A-501	B1/A-501	-	4.0	
110	3'-0"	7'-0"	1 3/4"	HM01	HM		-	-	HMA	C1/A-501	B1/A-501	-	4.0	
111A	6'-0"	7'-0"	1 3/4"	HM02	HM		-	-	HMA	C1/A-501	B1/A-501	-	2.0	
111B	3'-0"	7'-0"	1 3/4"	HM01	HMI	P2	-	-	HMA	C2/A-501	B2/A-501	A2/A-501	5.0	
112	3'-0"	7'-0"	1 3/4"	HM01	HM		-	-	HMA	C1/A-501	B1/A-501	-	4.0	
113A	6'-0"	7'-6"	1"	OH02		PRE-FIN	-		-	C3/A-501	B3/A-501	-	1.0	
113B	3'-0"	7'-0"	1 3/4"	HM01	HM		-	-	HMA	C1/A-501	B1/A-501	-	4.0	
114	6'-0"	7'-6"	1"	OH02		PRE-FIN	-		-	C3/A-501	B3/A-501	-	1.0	
115A	6'-0"	7'-0"	1 3/4"	HM02	HMI	P2	-	-	HMA	C2/A-501	B2/A-501	A2/A-501	3.0	
115B	6'-0"	7'-0"	1 3/4"	HM02	HMI	P2	-	-	HMA	C2/A-501	B2/A-501	A2/A-501	3.0	
115C	8'-0"	12'-0"	3 1/8"	OH01		PRE-FIN	-	REI 60	-	C4/A-501	B4/A-502	A4/A-502	1.0	

GENERAL NOTES

1. PROVIDE SEALANT AT JOINTS AT DISSIMILAR MATERIAL CONNECTIONS, ISOLATE DISSIMILAR METALS.
2. ALL DIMENSIONS FOR DOOR AND WINDOW OPENINGS TO BE FIELD VERIFIED PRIOR TO MANUFACTURING AND INSTALLATION.
3. WHERE OCCURES ALL WINDOWS AND TRANSOMS THAT OCCUR IN RATED CORRIDOR WALL TO BE RATED 45 MIN.
4. PRE-PAINT ALL FRAMES PRIOR TO INSTALLATION.
5. BRAILLE SIGNAGE REQUIRED ON STRIKE SIDE OF FRAME.

SCHEDULE NOTES

- IF SCHEDULE FIELD SHOWS A HYPHEN (-) OR IS BLANK, THERE ARE NO ITEMS APPLICABLE OR IS DETERMINED BY MANUFACTURER.
- SWING LINES SHOWN BELOW ARE REPRESENTATIONAL AND DO NOT INDICATE ACTUAL SWING. SEE PLANS FOR INDIVIDUAL SWINGS.

1. LEAF SIZING: SEE SCHEDULE
2. DOOR TYPES:

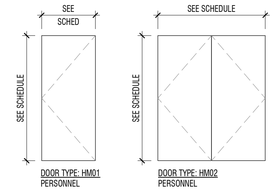

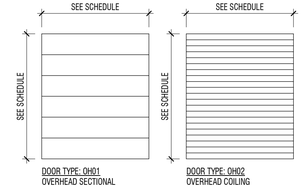

3. CONSTRUCTION:
   HMI HOLLOW METAL, INSULATED
   HM HOLLOW METAL
4. FINISH:
   PRE-FIN PRE-FINISHED BY MANUFACTURER
   SEE DOOR FINISHES ON SHEET A-691
5. GLAZING: NOT USED
6. RATING: NOT USED
7. FRAME TYPE: (NUMBER(S) INDICATE(S) FRAME TYPE(S) SHOWN

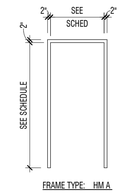

FRAME TYPE: HM A

8. DETAILS: (REFER TO SHEETS INDICATED FOR DOOR AND WINDOW DETAILS)
9. HARDWARE: (GROUP #, SEE SPECIFICATIONS FOR HARDWARE GROUPS)
10. NOTES:
    A:

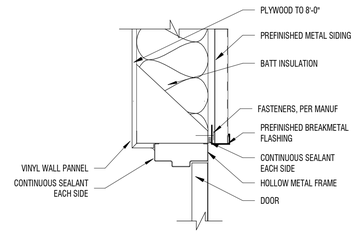

C2 DOOR HEAD DETAIL
1 1/2" = 1'-0"

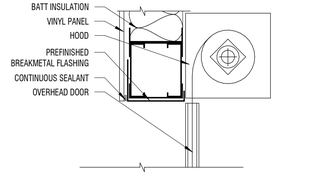

C3 OVERHEAD HEAD DETAIL
1 1/2" = 1'-0"

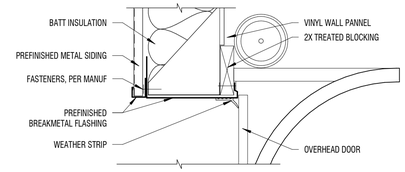

C4 OVERHEAD HEAD DETAIL
1 1/2" = 1'-0"

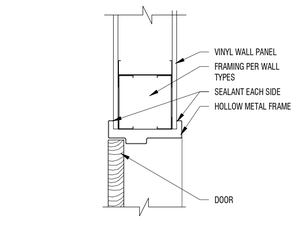

B1 DOOR HEAD DETAIL
1 1/2" = 1'-0"

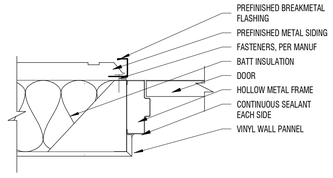

B2 DOOR JAMB DETAIL
1 1/2" = 1'-0"

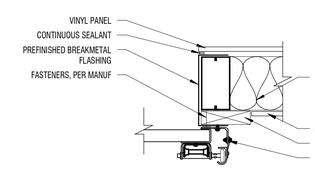

B3 OVERHEAD JAMB DETAIL
1 1/2" = 1'-0"

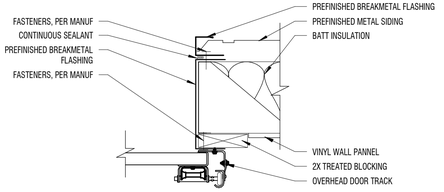

B4 OVERHEAD JAMB DETAIL
1 1/2" = 1'-0"

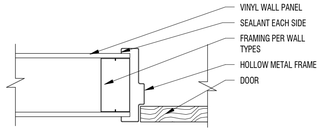

A1 DOOR JAMB DETAIL
1 1/2" = 1'-0"

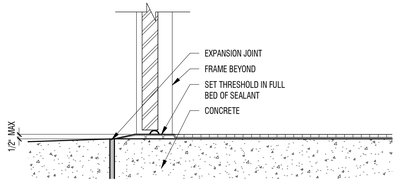

A2 DOOR THRESHOLD DETAIL
1 1/2" = 1'-0"

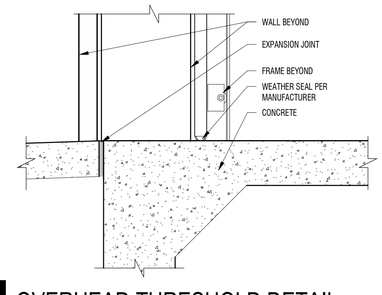

A4 OVERHEAD THRESHOLD DETAIL
1 1/2" = 1'-0"

REVIEWED FOR CODE COMPLIANCE
Thomas W Peterson
12/1/4/2023
DIVISION OF FACILITIES CONSTRUCTION AND MANAGEMENT

DFCM CODE COMPLIANCE OFFICER

NO.	REVISIONS	BY DATE
	PUBLISHED	

This document or any part therof in detail or design concept is the property of Forsgren Associates Inc. and shall not be copied without the written authroization of Forsgren Associates Inc.

DRAWN LOYND
DESIGNED
APPROVED LEMON
QA

ATTENTION
LINE IS 2-INCHES
AT 24"x36" SIZE
IF NOT 2-INCHES, SCALE DRAWINGS ACCORDINGLY

STATE OF UTAH
RYAN WAYNE LEMON
8668330-0301
LICENCED ARCHITECT

LOGAN FISH HATCHERY
UTAH DIVISION OF WILDLIFE RESOURCES
1465 WEST 200 NORTH
LOGAN, UTAH 84321

UTAH DNR WILDLIFE RESOURCES

design west | architects
255 SOUTH 300 WEST, LOGAN, UT 84321
PHONE: 435.752.7031

WARM WATER AQUACULTURE BUILDING
LOGAN HATCHERY IMPROVMENT PROJECT
SCHEDULE - DOOR & DETAILS

PROJECT NO: 822249
SHEET NO: A-501
DATE: 8-2023
PAGE NO: 21

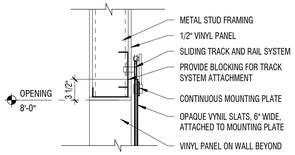

D1 DETAIL

1" = 1'-0" SLIDING VINYL SLATS ON TRACK

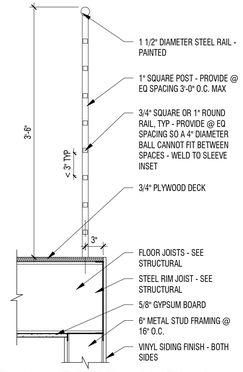

D3 GUARDRAIL AT TOP LANDING

1" = 1'-0" TYPICAL

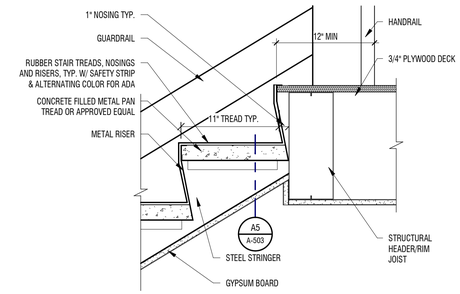

D4 STAIR DETAIL

1 1/2" = 1'-0" TYPICAL

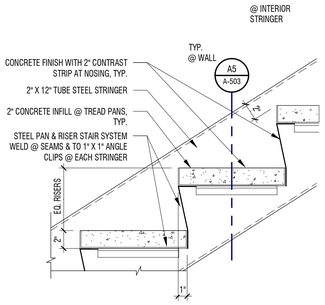

D5 STAIR TREAD

1 1/2" = 1'-0" TYPICAL

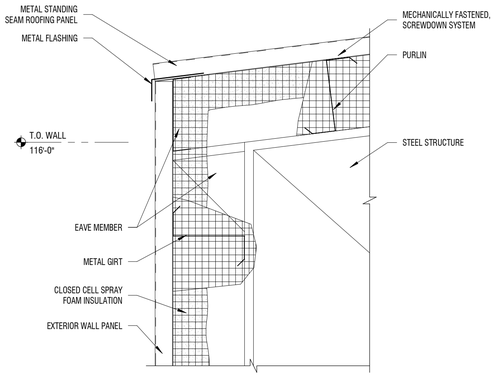

B1 ROOF DETAIL

1 1/2" = 1'-0"

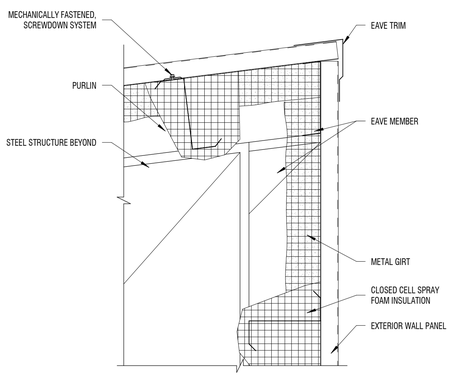

B3 ROOF DETAIL

1 1/2" = 1'-0"

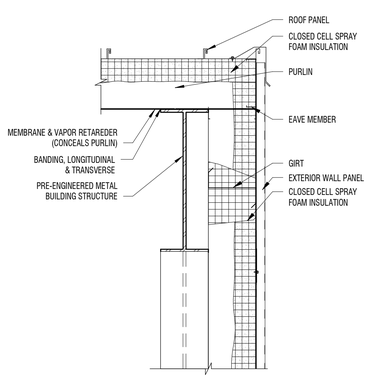

B4 ROOF DETAIL

1" = 1'-0"

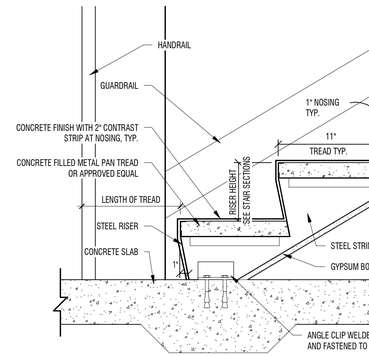

B5 STAIR DETAIL

1 1/2" = 1'-0" TYPICAL

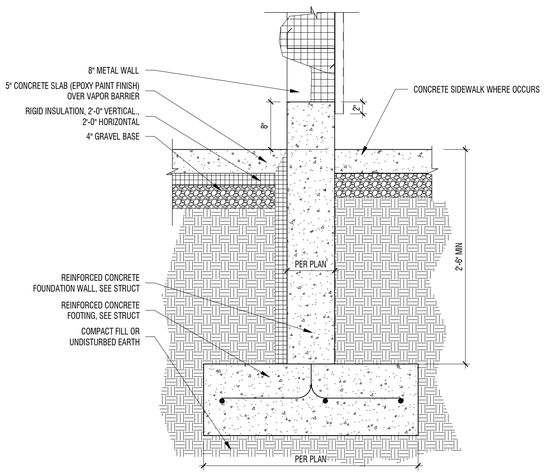

A1 FOUNDATION DETAIL

1" = 1'-0"

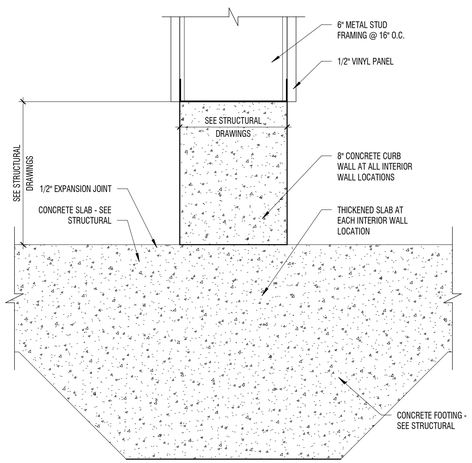

A3 CURB DETAIL

3" = 1'-0" @INTERIOR WALLS

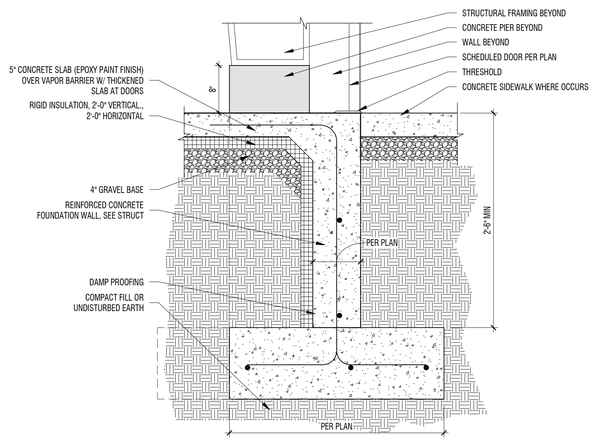

A4 FOUNDATION DETAIL

1" = 1'-0" @EXTERIOR DOORS

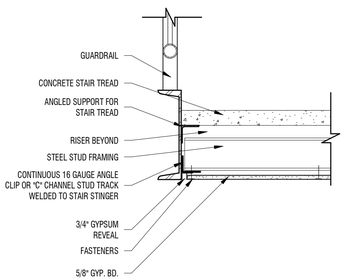

A5 STRINGER DETAIL

1 1/2" = 1'-0" TYPICAL

REVIEWED FOR CODE COMPLIANCE
Thomas W Peterson
12/14/2023
DIVISION OF FACILITIES CONSTRUCTION AND MANAGEMENT

DFCM CODE COMPLIANCE OFFICER

NO.	REVISIONS	BY DATE
	PUBLISHED	

This document or any part therof in detail or design concept is the property of Forsgren Associates Inc. and shall not be copied without the written authroization of Forsgren Associates Inc.

DRAWN LOYND
DESIGNED
APPROVED LEMON
QA

ATTENTION
LINE IS 2-INCHES
AT 24"x36" SIZE
IF NOT 2-INCHES, SCALE DRAWINGS ACCORDINGLY

STATE OF UTAH
RYAN WAYNE LEMON
6668330-0301
LICENSED ARCHITECT

LOGAN FISH HATCHERY

UTAH DIVISION OF WILDLIFE RESOURCES
1465 WEST 200 NORTH
LOGAN, UTAH 84321

UTAH DNR WILDLIFE RESOURCES

design west | architects
255 SOUTH 300 WEST, LOGAN, UT 84321
PHONE: 435.752.7031

WARM WATER AQUACULTURE BUILDING
LOGAN HATCHERY IMPROVMENT PROJECT

DETAILS - BUILDING

PROJECT NO: 822249
SHEET NO: A-503
DATE: 8-2023
PAGE NO: 22

NOTE: STONE SHOULD NOT BE ATTACHED DIRECTLY TO SHAFT WALLS. PROVIDE ADDITIONAL FURRING FOR STONE BACK-UP.

AT STONE WALLS, WHERE STONE EXCEEDS 10'-0" IN HEIGHT, OR IF THE SELECTED STONE IS GRAVITY SUPPORTED BY THE STUDS, THEY SHOULD BE ENGINEERED.

SHELVING, CABINETS, OR OTHER ITEMS ATTACHED TO WALL

CT, STONE, CULTURED STONE, MASONRY PRODUCTS, AND ETC

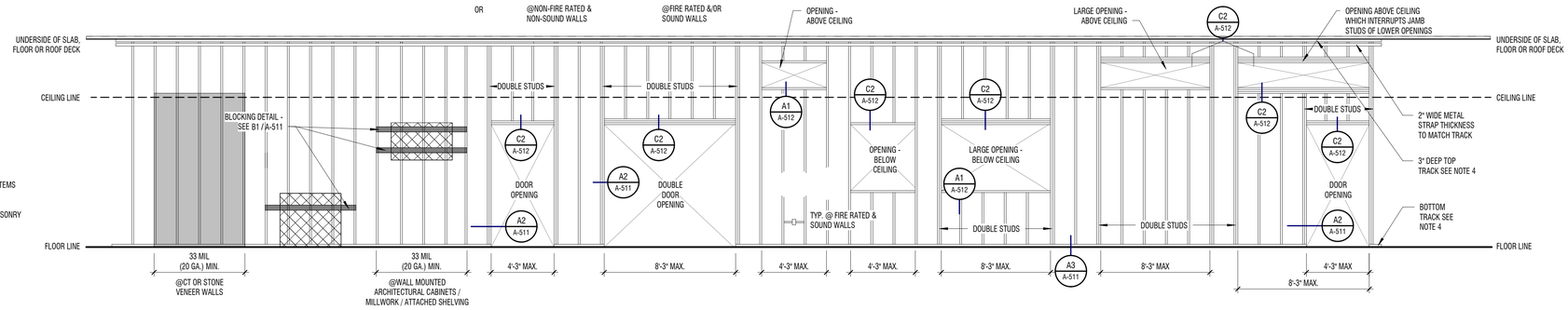

D1 STEEL STUDS TO B.O. STRUCTURE

1/4" = 1'-0" TYPICAL

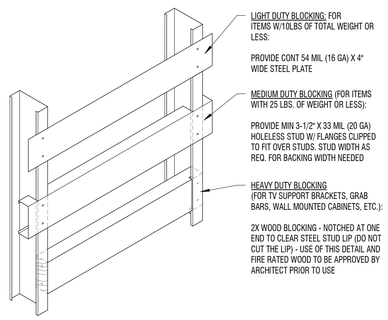

B1 WALL BLOCKING

1 1/2" = 1'-0" TYPICAL UNO

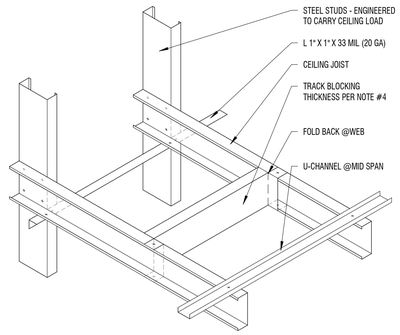

B2 CEILING FRAMING DETAILS

1 1/2" = 1'-0" TYPICAL

NOTE: STONE SHOULD NOT BE ATTACHED DIRECTLY TO SHAFT WALLS. PROVIDE ADDITIONAL FURRING FOR STONE BACK-UP.

AT STONE WALLS, WHERE STONE EXCEEDS 10'-0" IN HEIGHT, OR IF THE SELECTED STONE IS GRAVITY SUPPORTED BY THE STUDS, THEY SHOULD BE ENGINEERED.

SHELVING, CABINETS, OR OTHER ITEMS ATTACHED TO WALL

CT, STONE, CULTURED STONE, MASONRY PRODUCTS, AND ETC

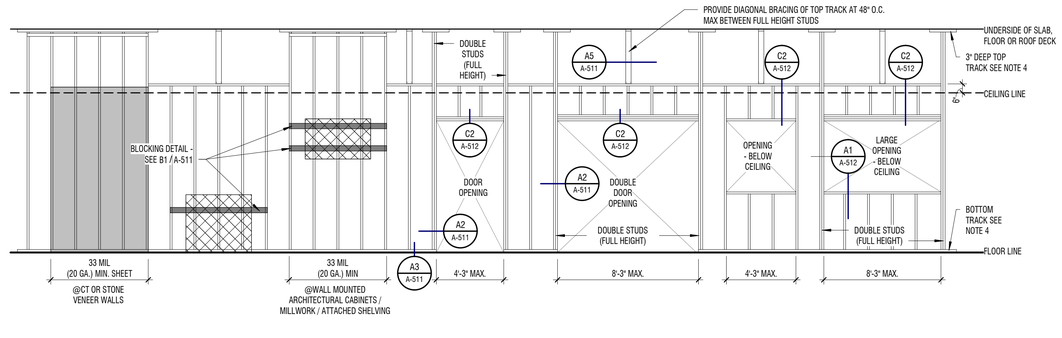

B3 STEEL STUDS EXT TO CLG HEIGHT

1/4" = 1'-0" TYPICAL

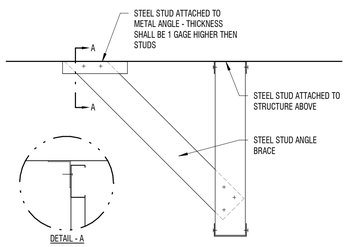

A1 DIAGONAL BRACING

1 1/2" = 1'-0" TYPICAL

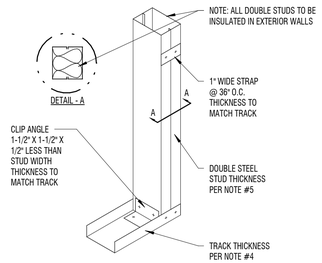

A2 END OF WALL / DOOR JAMB

1 1/2" = 1'-0" TYPICAL

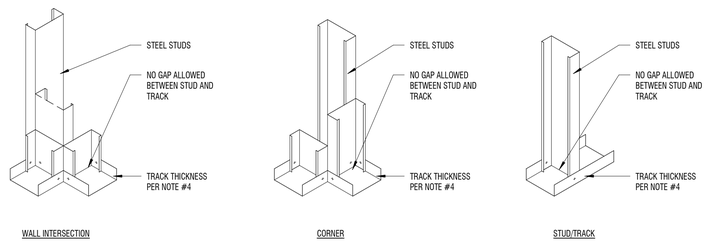

A3 MISC STUD / TRACK DETAILS

1 1/2" = 1'-0" TYPICAL

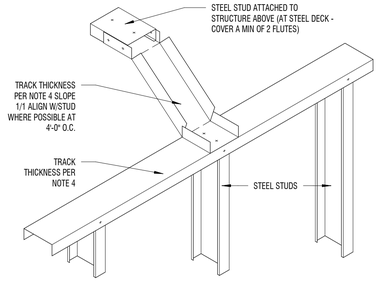

A5 DIAGONAL BRACE

1 1/2" = 1'-0" TYPICAL

REVIEWED FOR CODE COMPLIANCE
Thomas W Peterson
12/14/2023
DIVISION OF FACILITIES CONSTRUCTION AND MANAGEMENT

DFCM CODE COMPLIANCE OFFICER

PUBLISHED		
NO.	REVISIONS	BY DATE

This document or any part therof in detail or design concept is the property of Forsgren Associates Inc. and shall not be copied without the written authroization of Forsgren Associates Inc.

DRAWN
DESIGNED Designer
APPROVED
QA

ATTENTION
LINE IS 2-INCHES
AT 24"x36" SIZE
IF NOT 2-INCHES, SCALE DRAWINGS ACCORDINGLY

STATE OF UTAH
RYAN WAYNE LEMON
8668330-0301
LICENSED ARCHITECT

LOGAN FISH HATCHERY
UTAH DIVISION OF WILDLIFE RESOURCES
1465 WEST 200 NORTH
LOGAN, UTAH 84321

UTAH DNR WILDLIFE RESOURCES

design west | architects
255 SOUTH 300 WEST, LOGAN, UT 84321
PHONE: 435.752.7031

WARM WATER AQUACULTURE BUILDING
LOGAN HATCHERY IMPROVMENT PROJECT
DETAILS - METAL STUD TYPICALS

PROJECT NO: 822249
SHEET NO: A-511
DATE: 8-2023
PAGE NO: 23

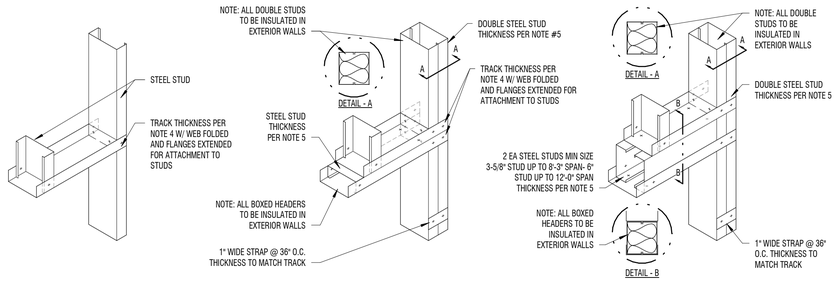

WINDOW & MISC HEADER TO 4'-3" SPAN

DOOR HEADER TO 4'-3" SPAN WINDOW & MISC HEADER TO 8'-3" SPAN

WINDOW & DOOR HEADER TO 12'-0" SPAN

C2 OPENING HEADERS

1 1/2" = 1'-0" TYPICAL

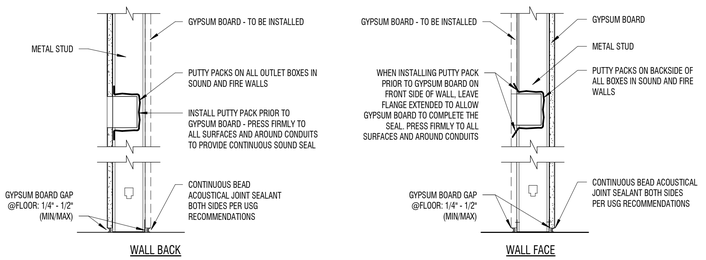

B2 SOUND / FIRE WALL SEALANTS

1 1/2" = 1'-0" TYPICAL

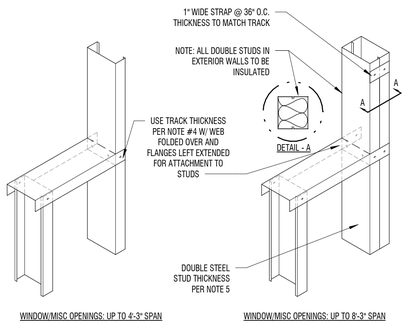

A1 OPENING SILLS

1 1/2" = 1'-0" TYPICAL

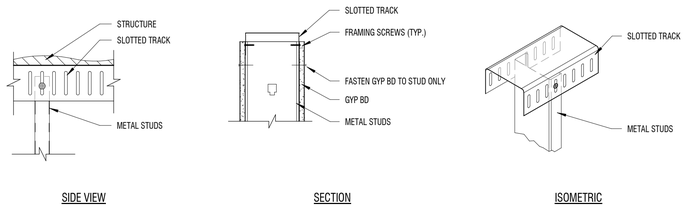

A2 SLOTTED TOP TRACK

1 1/2" = 1'-0" TYPICAL

FRAMING NOTES

1. STUD SPACING SHALL BE 16" O.C. UNLESS NOTED OTHERWISE.
2. ALL STUDS SHALL BE "C" TYPE STUDS WITH A 1 1/4" FLANGE MINIMUM.
3. DOUBLE STUDS AT SIDE OF OPENINGS ARE NOT ALLOWED TO BE CUT. MINIMUM GAGE OF STUDS AT SIDE OF OPENINGS TO BE 20 GA. AS LONG AS THE HEIGHT FALLS WITHIN THE LIMITS AS SET FORTH IN THE ALLOWABLE STEEL STUD HEIGHTS.
4. ALL TOP AND BOTTOM TRACKS WILL BE A MINIMUM OF ONE LEVEL OF THICKNESS HIGHER THAN THE STUDS SECURED TO IT. THE MINIMUM THICKNESS SHALL BE 33 MIL (20 GA) NO. U.N.O. IN STRUCTURAL DRAWINGS.
   18 MIL (25 GA) STUDS = 33 MIL (20 GA) TRACKS
   33 MIL (20 GA) STUDS = 43 MIL (18 GA) TRACKS
   43 MIL (18 GA) STUDS = 54 MIL (16 GA) TRACKS
   EXAMPLE - IF YOU HAVE A 18 MIL (25 GA) STUD WALL WITH AN OPENING USING 33 MIL (20 GA) STUDS AROUND THE OPENING - A 33 MIL (20 GA) TRACK WILL BE REQUIRED.
5. ALL DOUBLE STUDS AT OPENINGS, HEADERS, AND SILLS WILL BE A MINIMUM OF ONE LEVEL OF THICKNESS HIGHER THAN THE STUDS ADJACENT TO IT. THE MINIMUM THICKNESS SHALL BE 33 MIL (20 GA) UNO.
   18 MIL (25 GA) STUDS = 33 MIL (20 GA) TRACKS
   33 MIL (20 GA) STUDS = 43 MIL (18 GA) TRACKS
   43 MIL (18 GA) STUDS = 54 MIL (16 GA) TRACKS
6. STUD IDENTIFICATION
   CHARACTERS 1-3 = MEMBER DEPTH (362 = 3 5/8")
   CHARACTER 4 = STYLE (S = C-STUD(JOIST)
   CHARACTERS 5-7 = FLANGE WIDTH (125 = 1 1/4")
   CHARACTERS 8-9 = MATERIAL THICKNESS IN MILS
   FOR REFERENCE ONLY: 18 MILS = 25 GA = 33 MILS = 20 GA 43 MILS = 18 GA
7. GYPSUM BOARD USED FOR THIS TABLE TO BE 5/8" ON 1 SIDE OF THE STEEL STUDS.
8. GYPSUM BOARD USED FOR THIS TABLE TO BE 5/8" ON 1 SIDE OR TWO SIDES OF THE STEEL STUDS.
9. MINIMUM THICKNESS OF STUDS FOR SUPPORT OF CERAMIC TILE SHALL BE 33 MILS (20 GAGE) - ACTUAL THICKNESS WILL BE DETERMINED BY THE HEIGHT OF THE STUD.
10. NOT ALL POSSIBLE OPTIONS OF STEEL STUDS ARE SHOWN IN THIS TABLE. ALL OTHER VARIATIONS ARE TO REVIEWED AND APPROVED BY THE ARCHITECT OR STRUCTURAL ENGINEER.
11. 25 ga STUDS ARE NOT PERMITTED FOR CEILING STUD

NOTE:
INFORMATION IN THESE CHARTS COMES FROM STEEL STUD MANUFACTURERS ASSOCIATION "www.ssma.com". NOT ALL AVAILABLE PRODUCTS HAVE BEEN SHOWN HERE OR LISTED. THESE CHARTS ARE FOR INTERIOR NON LOAD BEARING PARTITIONS ONLY. ALL LOAD BEARING PARTITIONS NEED TO BE ENGINEERED BY THE STRUCTURAL ENGINEER.

ALLOWABLE HEIGHTS: STEEL STUD

STUD MEMBER See Note 6	SPACING	GYP BD 1 SIDE see note 8 typ	GYP BD 2 SIDES see note 8 typ	CT ON CEM BD 1 SIDE	CT ON CEM BD 2 SIDES	GYP BD 1 SIDE CT ON CEM BD 1 SIDE	2 LAYER GYP BD 2 SIDES
162S125-18	24" O.C.	6'-0"	7'-11"	NP	NP	NP	NP
	16" O.C.	6'-11"	8'-4	NP	NP	NP	NP
	12" O.C.	7'-7"	8'-10"	NP	NP	NP	NP
162S125-33	24" O.C.	7'-6"	8'-9"	5'-9"	NP	NP	NP
	16" O.C.	8'-7"	9'-8"	6'-7"	NP	NP	NP
	12" O.C.	9'-6"	10'-4"	7'-3"	NP	NP	NP
250S125-18	24" O.C.	8'-4"	10'-7"	NP	NP	NP	8'-5"
	16" O.C.	9'-6"	11'-3"	NP	NP	NP	8'-11"
	12" O.C.	10'-6"	11'-11"	NP	NP	NP	9'-6"
250S125-33	24" O.C.	10'-5"	11'-7"	7'-11"	7'-8"	8'-7"	8'-11"
	16" O.C.	11'-11"	12'-10"	9'-1"	8'-8"	9'-8"	10'-0"
	12" O.C.	13'-2"	13'-11"	10'-0"	9'-5"	10'-6"	10'-11"
250S125-43	24" O.C.	11'-4"	13'-6"	8'-8"	8'-2"	9'-6"	9'-7"
	16" O.C.	13'-0"	14'-9"	9'-11"	9'-3"	10'-7"	10'-10"
	12" O.C.	14'-4"	15'-9"	10'-11"	10'-1"	11'-5"	11'-9"
350S125-18	24" O.C.	10'-10"	13'-5"	NP	NP	NP	9'-5'
OR	16" O.C.	12'-5'	14'-4"	NP	NP	NP	10'-9"
362S125-18	12" O.C.	13'-8"	15'-4"	NP	NP	NP	12'-0"
350S125-33	24" O.C.	13'-6"	14'-9"	10'-4"	10'-1"	11'-2"	11'-7"
OR	16" O.C.	15'-6"	16'-5"	11'-10"	11'-4"	12'-6"	12'-11"
362S125-33	12" O.C.	17'-1"	17'-10"	13'-0"	12'-4"	13'-7"	14'-1"
350S125-43	24" O.C.	14'-9"	16'-3"	11'-3"	10'-6"	11'-8"	12'-3"
OR	16" O.C.	16'-11"	18'-0"	12'-11"	11'-11"	13'-3"	13'-10"
362S125-43	12" O.C.	19'-7"	14'-2"	13'-1"	14'-6"	15'-2"	
400S125-18	24" O.C.	12'-0"	14'-2'	NP	NP	NP	10'-5"
	16" O.C.	13'-9"	15'-4"	NP	NP	NP	11'-11"
	12" O.C.	15'-1"	16'-5"	NP	NP	NP	13'-0"
400S125-33	24" O.C.	15'-0"	16'-5'	11'-6"	11'-2"	12'-4"	12'-10"
	16" O.C.	17'-3"	18'-4"	13'-2"	12'-6"	13'-9"	14'-5"
	12" O.C.	18'-11"	19'-11"	14'-5"	13'-7"	15'-0"	15'-8"
400S125-43	24" O.C.	16'-5"	17'-2"	12'-6"	11'-6"	12'-8"	13'-4"
	16" O.C.	18'-9"	19'-5"	14'-4"	13'-2"	14'-6"	15'-2"
	12" O.C.	20'-8'	21'-2"	15'-9"	14'-5"	15'-11"	16'-8"
600S125-18	24" O.C.	NP	16'-9"	NP	NP	NP	11'-5"
	16" O.C.	NP	19'-9"	NP	NP	NP	14'-0"
	12" O.C.	NP	22'-1"	NP	NP	NP	16'-2"
600S125-33	24" O.C.	20'-10"	21'-7"	15'-11"	15'-0"	16'-7"	17'-2"
	16" O.C.	23'-11"	24'-6'	18'-3"	17'-0"	18'-9"	19'-5"
	12" O.C.	26'-3"	26'-9"	20'-1"	18'-7"	20'-6"	21'-3"
600S125-43	24" O.C.	22'-9"	25'-7"	17'-4"	17'-1"	19'-1"	19'-10"
	16" O.C.	26'-0"	28'-3"	19'-10"	19'-1"	21'-3"	22'-1"
	12" O.C.	28'-8"	30'-7"	21'-10"	20'-9"	23'-0"	23'-11"
800S125-43	24" O.C.	28'-11"	30'-6"	22'-0"	21'-0"	23'-5"	24'-3"
	16" O.C.	33'-1"	34'-4"	25'-3"	23'-9"	26'-3"	27'-2"
	12" O.C.	36'-5"	37'-6"	27'-9"	25'-11"	28'-8"	29'-8"

* NP = NOT PERMITTED

ALLOWABLE CEILING SPANS L/360: STL STUD

STUD MEMBER see note 6	SPACING	1 LAYER OF GYP BD LATERAL SUPPORT OF COMPRESSION FLANGE UNSUPPORTED see note 7	1 LAYER OF GYP BD LATERAL SUPPORT OF COMPRESSION FLANGE MID SPAN see note 7	2 LAYERS OF GYP BD LATERAL SUPPORT OF COMPRESSION FLANGE UNSUPPORTED see note 7	2 LAYERS OF GYP BD LATERAL SUPPORT OF COMPRESSION FLANGE MID SPAN see note 7
162S137-33	24" O.C.	7'-5'	7'-5'	6'-6"	6'-6"
	16" O.C.	8'-6"	8'-6"	7'-5"	7'-5"
	12" O.C.	9'-4"	9'-4"	8'-2"	8'-2"
250S162-33	24" O.C.	10'-10"	10'-10"	9'-5"	9'-5"
	16" O.C.	12'-5"	12'-5"	10'-10"	10'-10"
	12" O.C.	13'-5"	13'-8"	11'-11"	11'-11"
250S162-43	24" O.C.	11'-9"	11'-9"	10'-3"	10'-3"
	16" O.C.	13'-6"	13'-6"	11'-9"	11'-9"
	12" O.C.	14'-10"	14'-10"	13'-0"	13'-0"
362S162-33	24" O.C.	12'-2"	18'-2"	10'-11"	12'-7"
	16" O.C.	13'-7"	16'-6"	12'-2"	14'-5"
	12" O.C.	14'-8"	14'-5"	13'-2"	15'-10"
362S162-43	24" O.C.	13'-4"	15'-8"	11'-11"	13'-8"
	16" O.C.	14'-11"	17'-11	13'-4"	15'-8"
	12" O.C.	16'-2"	19'-9"	14'-5"	17'-3"
400S162-33	24" O.C.	12'-6"	15'-6"	11'-3"	13'-7"
	16" O.C.	13'-11"	17'-10"	12'-6"	15'-6"
	12" O.C.	15'-1"	19'-7"	13'-6"	17'-1"
400S162-43	24" O.C.	13'-8"	16'-11"	12'-2"	14'-9"
	16" O.C.	15'-3"	19'-4"	13'-8"	16'-11"
	12" O.C.	16'-7"	21'-4"	14'-9"	18'-7"
600S162-33	24" O.C.	14'-0"	20'-4"	12'-8"	18'-4"
	16" O.C.	15'-7"	22'-7"	14'-0"	20'-4"
	12" O.C.	16'-10"	24'-4"	15'-2"	21'-11"
600S162-43	24" O.C.	15'-2"	21'-10"	13'-8"	19'-8"
	16" O.C.	16'-11"	24'-4"	15'-2"	21'-10"
	12" O.C.	18'-4"	26'-3"	16'-5"	23'-7"

B3 TOP TRACK

1 1/2" = 1'-0" TYPICAL

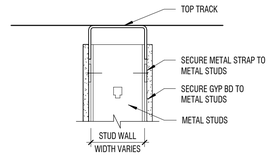

A3 FIRE / SOUND TOP TRACK

1 1/2" = 1'-0" @DECK/FLOOR

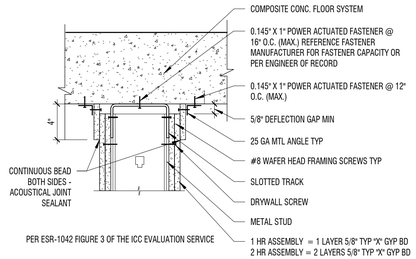

PER ESR-1042 FIGURE 3 OF THE ICC EVALUATION SERVICE

REVIEWED FOR CODE COMPLIANCE
Thomas W Peterson
12/14/2023
DIVISION OF FACILITIES CONSTRUCTION AND MANAGEMENT

DFCM CODE COMPLIANCE OFFICER

PUBLISHED

NO.	REVISIONS	BY DATE

This document or any part therof in detail or design concept is the property of Forsgren Associates Inc. and shall not be copied without the written authroization of Forsgren Associates Inc.

DRAWN
DESIGNED Designer
APPROVED
QA

ATTENTION
LINE IS 2-INCHES
AT 24"x36" SIZE
IF NOT 2-INCHES, SCALE DRAWINGS ACCORDINGLY

STATE OF UTAH
RYAN WAYNE LEMON
8668330-0301
LICENCED ARCHITECT

LOGAN FISH HATCHERY
UTAH DIVISION OF WILDLIFE RESOURCES
1465 WEST 200 NORTH
LOGAN, UTAH 84321

UTAH DNR WILDLIFE RESOURCES

design west | architects
255 SOUTH 300 WEST, LOGAN, UT 84321
PHONE: 435.752.7031

WARM WATER AQUACULTURE BUILDING
LOGAN HATCHERY IMPROVMENT PROJECT
DETAILS - METAL STUD TYPICALS

PROJECT NO: 822249
SHEET NO: A-512
DATE: 8-2023
PAGE NO: 24

INTERIOR WALL TYPES

S6A

DESCRIPTION	ASSEMBLY	FIRE RATING
N/A	1/2" VINYL WALL PANEL	N/A
	6" METAL STUD FRAMING @16" O.C.	TESTING SOURCE
	1/2" VINYL WALL PANEL	N/A
		STC RATING
		N/A
		TESTING SOURCE
		N/A

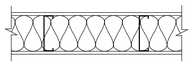

NOTE: SEE CODE PLAN FOR CAVITY INSULATION LAYOUT.

S6H

DESCRIPTION	ASSEMBLY	FIRE RATING
N/A	1/2" VINYL WALL PANEL	N/A
	CLOSED CELL SPRAY FOAM INSULATION	TESTING SOURCE
	6" METAL STUD FRAMING @16" O.C.	N/A
	1/2" VINYL WALL PANEL	STC RATING
		N/A
		TESTING SOURCE
		N/A

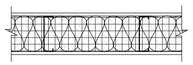

NOTE: SEE CODE PLAN FOR CAVITY INSULATION LAYOUT.

S6J

DESCRIPTION	ASSEMBLY	FIRE RATING
N/A	1/2" VINYL WALL PANEL	N/A
	CLOSED CELL SPRAY FOAM INSULATION	TESTING SOURCE
	6" METAL STUD FRAMING @16" O.C.	N/A
	5/8" PLYWOOD SHEATHING	STC RATING
		N/A
		TESTING SOURCE
		N/A

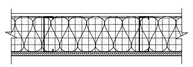

NOTE: SEE CODE PLAN FOR CAVITY INSULATION LAYOUT.

FINISH SCHEDULE

CONCRETE FINISH

MARK:	CF1
TYPE:	SEALED CONCRETE
MANUFACTURE:	SEE SPEC
COLOR:	
SHEEN:	
NOTES:	

PAINT

MARK:	P1	P2
MANUFACTURER:	SHERWIN WILLIAMS	SHERWIN WILLIAMS
COLOR:	SW 7004 SNOWBOUND	SW 7642 PAVESTONE
SHEEN:	SEMI-GLOSS	SEMI-GLOSS
NOTES:	-	HM DOORS & FRAMES

WALL COVERINGS

MARK:	WC1
TYPE:	VINYL WALL PANELS
MANUFACTURER:	EXTRUTECH OR EQUAL
STYLE:	91300 OR P2400
COLOR:	WHITE
NOTES:	

MILLWORK FINISHES

MARK:	MF1
TYPE:	LAMINATE
MANUFACTURER:	WILSONART
COLOR:	ALIGNED WALNUT
FINISH:	TEXTURED GLOSS
NOTES:	WET LAB & BRINE SHRIMP WORK AREAS

MILLWORK HARDWARE

MARK:	MH1
MANUFACTURER:	PER CONTRACTOR
COLOR:	SATIN STAINLESS STEEL
STYLE:	WIRE PULL
SIZE:	4"
NOTES:	INSTALL VERTICALLY ON ALL DOORS AND HORIZONTALLY ON ALL DRAWERS

COUNTER TOPS

MARK:	CT1
TYPE:	LAMINATE
MANUFACTURER:	WILSONART
COLOR:	BRAZILIAN GREY
FINISH:	TEXTURED GLOSS
EDGE:	
BACKSPLASH:	-
NOTES:	WET LAB & BRINE SHRIMP WORK AREAS

FINISH COMBINATIONS

MILLWORK GROUPING

MARK:	MG1
UPPER CABINETS:	MF1
BACKSPLASH:	MF1
COUNTERTOP:	CT1
FRONT EDGE STYLE:	MITERED EDGE
BASE CABINETS:	MF1
HARDWARE:	MH1
FRAME CONSTRUCTION:	FRAMELESS
DOOR INTERFACE STYLE:	FLUSH OVERLAY
NOTES:	WET LAB & BRINE SHRIMP WORK AREAS

GENERAL NOTES

1. ROOM FINISH TAGS FOR EACH ROOM REPRESENT TYPICAL FINISHES. SPECIFIC WALLS IN SELECTED AREAS MAY HAVE MULTIPLE FINISHES WHICH WILL BE INDICATED IN INTERIOR ELEVATIONS.
2. SEE INTERIOR ELEVATIONS FOR ADDITIONAL FINISH INFORMATION
3. SEE REFLECTED CEILING PLANS FOR ADDITIONAL FINISH INFORMATION
4. FOR FINISH LEGEND SEE A-591
5. SEALED CONCRETE DOES EXTEND UNDER CASEWORK OR MILLWORK
6. FIELD VERIFY ALL DIMENSIONS PRIOR TO FABRICATION OF CASEWORK AND FINISH ASSEMBLIES

LEGEND

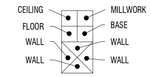

ROOM FINISH TAG

FINISH TAG - INDICATES SPECIFIC APPLIED FINISH

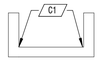

INDICATES FINISH IS APPLIED TO AREA BETWEEN ARROWS

INDICATES FINISH IS APPLIED TO FACE OF SURFACE(S)

CG L

INDICATES CORNER GUARD

REVIEWED FOR CODE COMPLIANCE
Thomas W Peterson
12/14/2023
DIVISION OF FACILITIES CONSTRUCTION AND MANAGEMENT

DFCM CODE COMPLIANCE OFFICER

NO.	REVISIONS	BY DATE
	PUBLISHED	

This document or any part therof in detail or design concept is the property of Forsgren Associates Inc. and shall not be copied without the written authroization of Forsgren Associates Inc.

DRAWN LOYND
DESIGNED
APPROVED LEMON
QA

ATTENTION
LINE IS 2-INCHES
AT 24"x36" SIZE
IF NOT 2-INCHES, SCALE DRAWINGS ACCORDINGLY

STATE OF UTAH
RYAN WAYNE LEMON
8668330-0301
LICENCED ARCHITECT

LOGAN FISH HATCHERY
UTAH DIVISION OF WILDLIFE RESOURCES
1465 WEST 200 NORTH
LOGAN, UTAH 84321

UTAH DNR WILDLIFE RESOURCES

design west | architects
255 SOUTH 300 WEST, LOGAN, UT 84321
PHONE: 435.752.7031

WARM WATER AQUACULTURE BUILDING
LOGAN HATCHERY IMPROVMENT PROJECT
SCHEDULE - FINISH

PROJECT NO: 822249
SHEET NO: A-601
DATE: 8-2023
PAGE NO: 25

GENERAL

1. ALL DESIGN, CONSTRUCTION, AND INSPECTION SHALL BE IN CONFORMANCE WITH THE 2021 INTERNATIONAL BUILDING CODE (IBC) AND REFERENCED STANDARDS.

2. THE CONTRACTOR SHALL VERIFY ALL DIMENSIONS AND CONDITIONS AT THE SITE.

3. ALL OMISSIONS OR CONFLICTS BETWEEN THE VARIOUS ELEMENTS OF THE WORKING DRAWINGS AND/OR SPECIFICATIONS SHALL BE BROUGHT TO THE ATTENTION OF THE ENGINEER BEFORE PROCEEDING WITH ANY WORK INVOLVED.

4. DRAWINGS INDICATE THE FINISHED PRODUCT. THEY DO NOT INDICATE A METHOD OF CONSTRUCTION. CONTRACTOR SHALL TAKE ALL PRECAUTIONS NECESSARY TO PROTECT THE STRUCTURE DURING CONSTRUCTION. SUCH PRECAUTIONS SHALL INCLUDE, BUT NOT BE LIMITED TO, BRACING, SHORING FOR CONSTRUCTION EQUIPMENT, ETC..

5. THE CONTRACTOR SHALL BE RESPONSIBLE FOR COMPENSATING THE OWNER FOR ANY CHANGES MADE AS A RESULT OF A DEVIATION FROM THE CONTRACT DOCUMENTS, DEVIATION FROM THE SPECIFICATIONS, FAULTY MATERIALS, OR FAULTY WORKMANSHIP.

6. OPTIONS ARE FOR THE CONTRACTOR'S CONVENIENCE. THE CONTRACTOR SHALL BE RESPONSIBLE FOR COORDINATING ALL REQUIRED DESIGN CHANGES. COST ASSOCIATED WITH ANY DESIGN WORK INITIATED BY THE OPTION SHALL BE BORN BY THE CONTRACTOR.

7. CONTRACTOR SHALL BE RESPONSIBLE FOR SAFETY AND PROTECTION WITHIN AND ADJACENT TO THE JOB SITE.

8. TEMPORARY SHORING AND BRACING SHALL BE PROVIDED WHEREVER NECESSARY TO TAKE CARE OF ALL LOADS TO WHICH THE STRUCTURE MAY BE SUBJECTED INCLUDING WIND. SUCH BRACING SHALL BE LEFT IN PLACE AS LONG AS MAY BE REQUIRED FOR SAFETY OR UNTIL ALL THE STRUCTURAL ELEMENTS ARE COMPLETE.

9. DURING AND AFTER CONSTRUCTION THE CONTRACTOR AND/OR OWNER SHALL KEEP LOADS ON THE STRUCTURE WITHIN THE LIMITS OF THE DESIGN LOADS.

10. THE GENERAL CONTRACTOR SHALL HAVE SHOP DRAWINGS REVIEWED BY THE ENGINEER PRIOR TO THE FABRICATION OR ERECTION FOR THE FOLLOWING ITEMS: REINFORCING STEEL, STRUCTURAL STEEL, AND MISCELLANEOUS METALS.

11. ALL DETAILS, SECTIONS, AND NOTES ARE INTENDED TO BE TYPICAL AND SHALL APPLY TO SIMILAR SITUATIONS UNLESS NOTED OR SHOWN OTHERWISE.

12. OBSERVATION VISITS TO THE JOB SITE BY THE OWNER, ENGINEER OR FIELD REPRESENTATIVES OF THE ENGINEER SHALL NEITHER BE CONSTRUED AS INSPECTION NOR APPROVAL OF CONSTRUCTION.

13. SIZES, LOCATIONS, AND ANCHORAGE'S OF EQUIPMENT SHALL BE VERIFIED IN THE FIELD WITH EQUIPMENT MANUFACTURERS (SUPPLIERS) PRIOR TO PLACING CONCRETE OR FABRICATING STEEL.

DESIGN CRITERIA

THE FOLLOWING STRUCTURAL DESIGN LOADS APPLY U.N.O.:

ROOF LIVE LOAD . . . . . L_r = 20 PSF
MEZZANINE DEAD LOAD . . . . . DL = 10 PSF
MEZZANINE LIVE LOAD . . . . . LL= 125 PSF

STRUCTURE RISK CATEGORY II

SNOW LOAD:
GROUND SNOW LOAD. . . . . P_g = 41 PSF
SNOW IMPORTANCE FACTOR . . . . . I_s = 1.0
SNOW EXPOSURE FACTOR. . . . . C_e = 1.0
SNOW THERMAL FACTOR . . . . . C_t = 1.0
SNOW SLOPE FACTOR . . . . . C_s = 1.0
FLAT ROOF SNOW LOAD. . . . . P_f = 35 PSF PER CACHE COUNTY
SLOPED ROOF SNOW LOAD . . . . . P_s = 35 PSF PER CACHE COUNTY

WIND:
BASIC WIND SPEED . . . . . V = 103 MPH (3-SECOND GUST, ULTIMATE)
WIND EXPOSURE C

LATERAL FORCE RESISTING SYSTEM TO BE DESIGNED BY METAL BUILDING MANUFACTURER. FOUNDATIONS WERE DESIGNED BASED ON:
STEEL ORDINARY MOMENT FRAMES
R = 3 1/2, Ω= 3, Cd = 3
STEEL ORDINARY CONCENTRICALLY BRACED FRAMES
R = 3 1/4, Ω = 2, Cd = 3 1/4

1

SEISMIC:
SEISMIC IMPORTANCE FACTOR. . . . . I_E = 1.0
SPECTRAL RESPONSE ACCELERATION. . . . . S_S = 1.112
SPECTRAL RESPONSE ACCELERATION. . . . . S_1 = 0.370
SEISMIC SOIL SITE CLASS . . . . . D, Default
SPECTRAL RESPONSE COEFFICIENT . . . . . S_{DS} = 0.890
SPECTRAL RESPONSE COEFFICIENT . . . . . S_{D1} = 0.476
SEISMIC DESIGN CATEGORY . . . . . D

SOILS:
DESIGN BEARING CAPACITY = 2500 PSF PER GEOTECHNICAL REPORT PROVIDED BY: GSH GEOTECHNICAL, INC. DATED MARCH 1, 2023. JOB NO. 0802-068-23

FOOTINGS

1. FOOTING ELEVATIONS SHOWN ON PLAN ARE TOP OF FOOTINGS AND ARE MINIMUM DEPTH. DIFFERENT OR UNUSUAL CONDITIONS SHALL BE REPORTED TO THE ENGINEER.

2. EXTERIOR WALL FOOTINGS SHALL BEAR AT A MINIMUM DEPTH OF 30" BELOW FINISHED EXTERIOR GRADE.

3. NO FOOTINGS SHALL BE PLACED IN WATER OR ON FROZEN GROUND.

4. ANY SOIL CONDITION ENCOUNTERED DURING EXCAVATION THAT IS CONTRARY TO THE CONDITIONS USED FOR DESIGN OF FOOTINGS, OR ON THE DRAWINGS SHALL BE BROUGHT TO THE ATTENTION OF THE ENGINEER BEFORE PROCEEDING.

5. WHERE 6" DIAMETER OR LARGER PIPE PASSES THROUGH AN INTERIOR OR EXTERIOR FOUNDATION WALL, STEP THE FOOTING DOWN TO PASS BELOW PIPE AND THEN STEP BACK UP TO INDICATED ELEVATION. PROVIDE PIPE SLEEVE THROUGH FOUNDATION WALL. PLACE BOTTOM OF PIPE SLEEVE 12" ABOVE TOP OF FOOTING.

6. ALL FOOTING EXCAVATIONS SHALL BE EXAMINED BY THE ENGINEER FOR VERIFICATION OF ADEQUATE BEARING CONDITIONS BEFORE PLACING CONCRETE.

7. COMPACT SOIL UNDER FOOTINGS TO AT LEAST 95% OF MAXIMUM DRY DENSITY AS DETERMINED BY (STANDARD PROCTOR) ASTM D1557.

8. FOUNDATION SUBGRADE SHALL BE PREPARED IN ACCORDANCE WITH THE RECOMMENDATIONS FROM THE GEOTECHNICAL REPORT PREPARED BY GSH GEOTECHNICAL, INC. DATED MARCH 1, 2023.

9. ALL FOUNDATIONS SHALL BEAR ON SUITABLE NATURAL SOILS AND/OR STRUCTURAL FILL EXTENDING TO SUITABLE NATURAL SOILS. SPREAD FOOTINGS DO NOT REQUIRE GRANULAR STRUCTURAL REPLACEMENT FILL WHERE NATURAL SOILS ARE SUITABLE AS DESCRIBED IN THE GEOTECHNICAL REPORT. REMOVE ALL NON-ENGINEERED FILLS BELOW SLABS AND FOUNDATIONS AND REPLACE WITH STRUCTURAL FILLS AS REQUIRED BY THE GEOTECHNICAL REPORT.

1

CONCRETE

1. ALL CONCRETE SHALL MEET THE REQUIREMENTS OF ACI-301, "SPECIFICATION FOR STRUCTURAL CONCRETE FOR BUILDINGS." PROPORTIONING OF INGREDIENTS FOR EACH CONCRETE MIX SHALL BE BY METHOD 2 OR THE ALTERNATE PROCEDURE GIVEN IN ACI-301. PLACE CONCRETE PER ACI-304 AND CONFORM TO ACI-604 (306) FOR COLD WEATHER PLACEMENT AND ACI-605 (305) FOR HOT WEATHER PLACEMENT. USE INTERIOR MECHANICAL VIBRATORS WITH 7,000 RPM MINIMUM FREQUENCY. DO NOT OVER-VIBRATE. CONCRETE SHALL BE PLACED MONOLITHICALLY BETWEEN CONSTRUCTION AND CONTROL JOINTS. PROTECT ALL CONCRETE FROM PREMATURE DRYING, EXCESSIVE HOT OR COLD TEMPERATURE FOR SEVEN DAYS AFTER PLACING.

2. STRENGTH
TWENTY-EIGHT DAY COMPRESSIVE STRENGTH SHALL BE: 4000 PSI
MAX. WATER/CEMENT RATIO: 0.45

3. STRUCTURAL CONCRETE EXPOSURE CLASS: F2, W1 1

4. MATERIALS
CEMENT: ASTM 150, TYPE I/II.
COARSE AND FINE AGGREGATE: ASTM C33.
WATER SHALL BE CLEAN AND POTABLE.

5. ADMIXTURES

WATER REDUCING ADMIXTURE: ASTM C494, ADMIXTURES SHALL BE USED IN EXACT ACCORDANCE WITH MANUFACTURER'S INSTRUCTIONS.

XYPEX - FOR SUMP PITS AND DRAIN TRENCHES (SLABS AND WALLS ONLY).

SYNERGIZED PERFORMANCE SYSTEMS: CONCRETE USING ADMIXTURES TO PRODUCE FLOWABLE CONCRETE MAY BE USED SUBJECT TO ENGINEER'S APPROVAL.

6. AIR ENTRAINMENT:ASTM C260 AND ASTM C494, ENTRAIN 6% PLUS/MINUS 1 1/2% BY VOLUME IN ALL EXTERIOR EXPOSED CONCRETE. 1

7. NO OTHER ADMIXTURE PERMITTED UNLESS APPROVED BY THE ENGINEER OF RECORD.

8. THE FLATNESS AND LEVELNESS OF CONCRETE FLOORS SHALL BE MEASURED PER ASTM E 1155:STANDARD TEST METHOD FOR DETERMINING FLOOR FLATNESS AND LEVELNESS USING THE F-NUMBER SYSTEM.

SPECIFIED OVERALL F-NUMBER FF 25/FL 20
MINIMUM LOCAL F-NUMBER FF 15/FL 12

9. A STATEMENT OF MIX DESIGN FOR ALL CONCRETE SHALL BE SUBMITTED TO AND REVIEWED BY THE ENGINEER PRIOR TO COMMENCING WORK.

10. ALL CONCRETE WORK SHALL BE PLACED, CURED, STRIPPED, AND PROTECTED AS DIRECTED BY THE SPECIFICATIONS AND ACI STANDARDS AND PRACTICES.

11. DOWEL VERTICAL BARS THE DEVELOPMENT LENGTH INTO STRUCTURE ABOVE AND FOOTINGS BELOW. PROVIDE 90 DEGREE HOOK WHERE DEVELOPMENT LENGTH IS NOT POSSIBLE. LAP ALL REINF. IN CONCRETE THE LISTED LENGTH U.N.O.

12. BEFORE CONCRETE IS POURED CHECK WITH ALL TRADES TO ENSURE PROPER PLACEMENT OF ALL OPENINGS, SLEEVES, CURBS, CONDUITS, BOLTS, INSERTS, ETC. RELATIVE TO WORK.

13. REFER TO DRAWINGS FOR TYPICAL CONSTRUCTION JOINT DETAILS.

14. WHERE EXTERIOR SLABS ON GRADE ABUT FOUNDATIONS OR COLUMNS PROVIDE 3/8" PREFORMED EXPANSION JOINT WITH SEALANT.

15. CONTRACTOR SHALL SUBMIT A PLACEMENT PLAN FOR REVIEW INCLUDING ALL ITEMS EMBEDDED IN CONCRETE AND ALL CONCRETE PENETRATIONS.

FORM WORK

1. FOLLOW RECOMMENDED PRACTICE FOR CONCRETE FORMWORK (ACI-347-14).

2. ALL SHORING SHALL BE THE RESPONSIBILITY OF THE CONTRACTOR. FORMWORK SUPPORTS AND SHORING SHALL BE DESIGNED TO PROVIDE FINISHED CONCRETE SURFACES OF ALL FACES LEVEL, PLUMB, AND TRUE TO THE DIMENSIONS AND ELEVATIONS SHOWN. TOLERANCES AND VARIATIONS SHALL BE AS SPECIFIED.

REINFORCING STEEL

1. ALL REINFORCEMENT SHALL BE DETAILED AND PLACED IN ACCORDANCE WITH BP-66(04): ACI DETAILING MANUAL - 2004 AND ACI 350-06.

2. REINFORCING STEEL SHALL BE ASTM A615 GRADE 60. WELDED WIRE FABRIC SHALL CONFORM TO ASTM A1064.

3. ALL REINFORCEMENT SHALL BE SECURELY TIED AND HELD IN PLACE.

4. REINFORCING BARS THAT ARE TO BE WELDED, INCLUDING DEFORMED BAR ANCHORS (D.B.A.) SHALL COMPLY WITH ASTM A706 OR ANOTHER APPROVED WELDABLE GRADE AND SHALL BE WELDED IN ACCORDANCE WITH THE A.W.S. RECOMMENDATIONS.

5. ALL CONTINUOUS REINFORCEMENT SHALL TERMINATE WITH A 90 DEG. TURN OR A SEPARATE CORNER BAR. ALL SPLICES IN CONCRETE SHALL LAP THE LISTED LAP LENGTH.

6. THE FOLLOWING CONCRETE COVER SHALL BE PROVIDED FOR REINFORCEMENT:
A. CONCRETE CAST AGAINST AND PERMANENTLY EXPOSED TO EARTH: 3"
B. ALL OTHER CONCRETE:2"

7. PRIOR TO FABRICATION AND PLACEMENT, SHOP DRAWINGS FOR ALL REINFORCING STEEL SHALL BE REVIEWED BY THE ENGINEER.

8. REFER TO WALL CORNER AND WALL INTERSECTION REINFORCING DETAIL. IN GENERAL, THE WALL CORNER REINFORCING SIZES AND SPACING SHALL BE CALLED OUT ON THE PLANS AND REFERENCED TO THESE DETAILS AND THE TYPICAL HORIZONTAL WALL REINFORCING SHALL LAP WITH THE HORIZONTAL REINFORCING.

9. ALL BENDS, UNLESS OTHERWISE SHOWN, SHALL BE A 90 DEGREE STANDARD HOOK. REFER TO STANDARD CONCRETE HOOK DETAILS.

10. ALL WALL CORNER AND WALL INTERSECTION REINFORCEMENT BARS SHALL BE CONTINUOUS AROUND CORNERS AND THROUGH COLUMNS OR PILASTERS. REINFORCEMENT SHALL BE EXTENDED INTO CONNECTING WALLS AND LAPPED ON THE OPPOSITE FACE OF THE CONNECTING WALLS.

11. STAGGER SPLICES IN HORIZONTAL WALL BARS SO THAT NO TWO ADJACENT BARS IN THE SAME OR OPPOSITE CURTAIN ARE SPLICED AT THE SAME LOCATION. ALL REINFORCEMENT BENDS AND LAPS, UNLESS OTHERWISE NOTED, SHALL SATISFY THE REQUIREMENTS OF THE STD. CONCRETE HOOK SCHEDULE AND THE CONCRETE REINFORCEMENT LAP AND DEVELOPMENT SCHEDULES.

STRUCTURAL STEEL

1. ALL STEEL SHALL BE FABRICATED AND ERECTED IN ACCORDANCE WITH AMERICAN INSTITUTE OF STEEL CONSTRUCTION SPECIFICATION FOR THE DESIGN, FABRICATION AND ERECTION OF STRUCTURAL STEEL FOR BUILDING, LATEST EDITION. OBTAIN APPROVAL OF THE ENGINEER OF RECORD PRIOR TO SITE CUTTING, MAKING ADJUSTMENTS OR PERFORMING FIELD WELDS NOT SCHEDULED OR SHOWN ON PLANS OR DETAILS. ALL ASTM A325 BOLTING MATERIAL SHALL BE PROVIDED WITH CERTIFIED DIRECT TENSION INDICATOR WASHERS AND HARDENED WASHERS FOR FIELD BOLTED CONNECTIONS.

2. TUBE STEEL SHALL BE ASTM A500, GRADE B, FY=46 KSI
WIDE FLANGE SHALL BE ASTM A992, FY = 50 KSI
CHANNEL SECTIONS SHALL BE ASTM A36, FY = 36 KSI
ANGLES SHALL BE ASTM A36, FY = 36KSI
PLATES AND BARS SHALL BE ASTM A36, FY = 36 KSI
ALL SHAPES LISTED ABOVE SHALL BE GRADE 304/316 STAINLESS STEEL WHERE SPECIFIED IN THE PLAN w/ Fy=30 KSI MIN.

METAL BUILDING SHAPES AND PLATES SHALL BE HOT DIP GALVANIZED .

3. BOLTS SHALL BE A325.
WASHERS SHALL BE F436.
NUTS SHALL BE A563.
STAINLESS STEEL BOLTS SHALL BE ASTM A593 CONDITION A
STAINLESS STEEL WASHERS SHALL BE GRADE 304 OR 316
STAILESS STELL NUTS SHALL BE ASTM A594

ANCHOR BOLTS

1. CONCRETE ANCHOR RODS SHALL MEET THE QUALITY OF ASTM F1554 GRADE 36 KSI, GALVANIZED (ASTM A153, CLASS C) RODS AND SHALL HAVE A STANDARD BOLT HEAD OR AN EQUAL DEFORMITY IN THE EMBEDDED PORTION.

COLD FORM STEEL

THE FIRST SET OF NUMBERS INDICATES THE MEMBER DEPTH IN 1/100 INCHES

THE NEXT LETTER INDICATES THE PRIMARY FUNCTION:
S = STUD OF JOIST SECTION
T = TRACK SECTION
U = CHANNEL SECTION
F = FURRING CHANNEL SECTION

THE SECOND SET OF NUMBERS INDICATES THE FLANGE WIDTH IN 1/100 INCHES

THE LAST TWO NUMBERS INDICATE THE GAUGE OF STEEL:
33 MIL - 20 GAUGE
43 MIL - 18 GAUGE
54 MIL - 16 GAUGE
68 MIL - 14 GAUGE
97 MIL - 12 GAUGE
118 MIL - 10 GAUGE

STUDS
USE THREE (3) STUDS AT THE CORNER OF ALL EXTERIOR WALLS.
USE THREE (3) STUDS AT THE INTERSECTION OF ALL LOAD BEARING WALLS (EXTERIOR AND/OR INTERIOR)
ENDS OF STUDS SHOULD SEAT FIRMLY IN RUNNER TRACK WITCH MUST HAVE FULL BEARING ON STRUCTURE.
ATTACH EACH RUNNER TRACK LEG TO EACH STUD FLANGE WITH ONE (1) #10-16 SCREW, 5/8" LONG.

NO NOTCHING OR COPING OF STUDS IS ALLOWED.
ALL BRACING SHALL BE INSTALLED AT THE TIME THE WALL IS ERECTED. FAILURE TO INSTALL BRACING AT THIS TIME MAY COMPROMISE THE STRUCTURAL INTEGRITY OF THE BUILDING.
LATERAL BRACING SHALL BE PROVIDED @ 4'-0" O.C. (MAX.) FOR ALL LOAD BEARING WALLS.
BRACING SHALL BE PROVIDED FOR JOISTS @ 8'-0" O.C. (MAX.).

ATTACHMENTS
USE #10-16, 5/8" LONG, LOW PROFILE HEAD SCREWS FOR ALL STEEL TO STEEL CONNECTIONS EXCEPT AS NOTED ON PLANS AND DETAILS.

A ¾" (MINIMUM) CLEARANCE MUST BE MAINTAINED FROM ALL EDGES OF THE STEEL MEMBERS IN LOCATING SCREWS. A ¾" (MINIMUM) ON CENTER SPACING MUST BE MAINTAINED BETWEEN ADJACENT SCREWS.

ALL SCREW RECOMMENDATIONS ARE BASED ON CCFSS TECHNICAL BULLETIN VOL. 2, NO. 1 WHICH OUTLINES THE PROPOSED AISI SPECIFICATION PROVISIONS FOR SCREW CONNECTIONS, AND ALLOWABLE SCREW SHEAR STRENGTH VALUES PUBLISHED BY BUILDEX, COMPASS AND GRABBER.

FOR ATTACHMENT OF SINGLE - LAYER ½" OR 5/8" GYPSUM BOARD OR SHEATHING TO STEEL STUDS AND JOISTS, USE #10 - 16 SCREWS, 1" LONG BUGLE HEAD SCREWS.

WELDING PROCEDURE TO BE IN ACCORDANCE WITH AWS D1.3 - 81. USE 1/8" E60XX ELECTRODE MINIMUM. MINIMUM WELD THROAT THICKNESS (T) MUST MATCH OR EXCEED THE THICKNESS OF THE THINNEST CONNECTED SHEET.

IN WELDING, THE ZINC COATING ON STEEL FRAMING WILL BE BURNED AWAY; THEREFORE, A ZINC RICH PAINT MUST BE APPLIED TO THE WELD AREA TO PROVIDE CORROSION RESISTANCE.

MISCELLANEOUS
ALL CONNECTIONS SHALL BE COMPLETE AS PER THE PLANS AND SPECIFICATIONS AT THE TIME OF INSTALLATION. FAILURE TO PROMPTLY COMPLETE CONNECTIONS MAY COMPROMISE THE STRUCTURAL INTEGRITY OF THE BUILDING.

PRECAUTIONS MUST BE TAKEN TO AVOID CONSTRUCTION LOADS EXCEEDING DESIGN LIVE LOADS. CONSTRUCTION LOADS HAVE NOT BEEN CONSIDERED IN THESE RECOMMENDATIONS.

SPLICING OF RUNNER TRACK TO BE ACCOMPLISHED BY SCREW ATTACHMENT OF A STUD SECTION BETWEEN VERTICAL STUDS TO THE RUNNER TRACK USING #10 - 16 SCREWS, 5/8" LONG LOW PROFILE SCREWS.

SHOP DRAWINGS

SUBMIT SHOP DRAWINGS TO THE ARCHITECT/ENGINEER OF RECORD FOR THE FOLLOWING:

1. REINFORCING STEEL

2. MANUFACTURED STEEL BUILDING:
PROVIDE STRUCTURAL DRAWINGS AND CALCULATIONS STAMPED BY A REGISTERED PROFESSIONAL ENGINEER FROM THE PROJECT STATE.

NON-SHRINK GROUT

1. F'C = 7,000 PSI MINIMUM IN 28 DAYS. FILL UP ENTIRE SPACE AVOIDING AIR POCKETS.

2. GROUT SHALL BE HIGH STRENGTH, NON-METALLIC, NON-SHRINKING SLURRY GROUT.

POST-INSTALLED ANCHORS

1. EXCEPT WHERE INDICATED ON THE DRAWINGS OR AS OTHERWISE APPROVED, POST-INSTALLED ANCHORS SHALL CONSIST OF THE FOLLOWING ANCHOR TYPES.

A. ANCHORAGE TO CONCRETE

(1) ADHESIVE ANCHORS FOR CRACKED AND UNCRACKED CONCRETE USE:
a. HILTI HIT-HY 200 SAFE SET SYSTEM WITH HILTI HOLLOW DRILL BIT SYSTEM WITH HAS-E THREADED ROD PER ICC ESR-3187.
b. HILTI HIT-RE 500-SD SAFE SET EPOXY ADHESIVE ANCHORING SYSTEM WITH HAS-E THREADED ROD PER ICC ESR-2322 FOR SLOW CURE APPLICATIONS.

(2) MEDIUM DUTY MECHANICAL ANCHORS FOR CRACKED AND UNCRACKED CONCRETE USE:
a.SIMPSON TITEN HD STAINLESS STEEL ANCHOR

B.REBAR DOWELING INTO CONCRETE

(1) ADHESIVE ANCHORS FOR CRACKED AND UNCRACKED CONCRETE USE:
a. HILTI HIT-HY 200 SAFE SET SYSTEM WITH HILTI HOLLOW DRILL BIT SYSTEM WITH CONTINUOUSLY DEFORMED REBAR PER ICC ESR-3187.

2. INSTALL ANCHORS PER THE MANUFACTURER INSTRUCTIONS, AS INCLUDED IN THE ANCHOR PACKAGING.

3. THE CONTRACTOR SHALL ARRANGE AN ANCHOR MANUFACTURER'S REPRESENTATIVE TO PROVIDE ONSITE INSTALLATION TRAINING FOR ALL OF THEIR ANCHORING PRODUCTS SPECIFIED. THE STRUCTURAL ENGINEER OF RECORD MUST RECEIVE DOCUMENTED CONFIRMATION THAT ALL OF THE CONTRACTOR'S PERSONNEL WHO INSTALL ANCHORS ARE TRAINED PRIOR TO THE COMMENCEMENT OF INSTALLING ANCHORS.

4. ANCHOR CAPACITY IS DEPENDANT UPON SPACING BETWEEN ADJACENT ANCHORS AND PROXIMITY OF ANCHORS TO EDGE OF CONCRETE. INSTALL ANCHORS IN ACCORDANCE WITH SPACING AND EDGE CLEARANCES INDICATED ON THE DRAWINGS.

NONSTRUCTURAL COMPONENT CHECKLIST

ITEM DESCRITION	DEFERRED SUBITTAL
MEP COMPONENTS:	
MECHANICAL EQUIPMENT (I.E. HVAC, FANS, AIR HANDLERS, BOILERS, FURNACES, TANKS, CHILLERS, WATER HEATERS, HEAT EXCHANGERS, EVAPORATORS, ENGINES, PUMPS, COMPRESSORS, MANUFACTURED EQUIPMENT)	X
ELECTRICAL EQUIPMENT (I.E. GENERATORS, BATTERIES, INVERTERS, TRANSFORMERS, MCC, PANEL BOARDS, SWITCH GEAR, CABINETS, ETC.)	X
PIPING AND CONDUIT SYSTEMS INCLUDING CABLE TRAYS.	X

1. DEFERRED SUBMITTALS FOR SEISMIC RESTRAINT OF NONSTRUCTURAL COMPONENTS MUST BE SUBMITTED TO THE DFCM BUILDING OFFICIAL A MINIMUM OF TWO WEEKS PRIOR TO THE PLANNED INSTALLATION IN ORDER TO ALLOW FOR PLAN REVIEW AND FORWARDING TO INSPECTORS. IN THE EVENT THAT THE SUBMITTAL IS DEFICIENT ADDITIONAL TIME MAY BECOME NECESSARY.
2. WHEN SEISMIC RESTRAINT OF NON-STRUCTURAL COMPONENTS IS INSTALLED PRIOR TO RECEIVING DFCM APPROVAL IT SHALL NOT BE COVERED OR CONCEALED UNTIL RECEIVING BOTH PLAN REVIEW AND INSPECTION APPROVAL. FURTHER, INSTALLERS ARE PROCEEDING AT THEIR OWN RISK UNTIL PLAN REVIEW AND INSPECTION APPROVAL OCCURS.
3. THE REQUIREMENTS OF NONSTRUCTURAL COMPONENTS CANNOT BE SATISFIED BY A GENERAL REFERENCE TO DESIGN MANUALS. THE DESIGN PROFESSIONAL MAY UTILIZE THESE MANUALS AS A BASIS OF THEIR DESIGN, BUT MUST PROVIDE ALL SUPPORTING DOCUMENTATION TO ENSURE THAT THE DESIGN CONFORMS TO THE REQUIREMENTS OF ASCE 7-16.
4. SUBMITTALS MUST INCLUDE DETAILS OF THE PROPOSED SEISMIC RESTRAINT ON NONSTRUCTURAL COMPONENTS. THESE DETAILS MUST SHOW SPECIFIC INFORMATION RELATING TO THE MATERIALS, TYPE, SIZE, AND LOCATIONS OF ANCHORAGES; MATERIALS USED FOR BRACING; ATTACHMENT REQUIREMENTS OF BRACING TO STRUCTURE AND COMPONENTS; AND LOCATIONS OF TRANSVERSE AND LONGITUDINAL SWAY BRACING AND ROD STIFFENERS. SUBMITTALS MAY ALSO REQUIRE STRUCTURAL CALCULATIONS, ENGINEERING REPORTS, TEST DATA AND/OR SPECIFICATIONS TO ENSURE CODE COMPLIANCE

1

WATERSTOPS

1. INSTALLATION OF WATERSTOP

A. USE SPLIT FORMWORK WHERE REQUIRED.

B. CENTER WATERSTOP ON JOINT.

C. ALLOW CLEARANCE BETWEEN WATERSTOP AND REINFORCING STEEL TO PREVENT ROCK POCKETS AND AIR VOIDS CAUSED BY AGGREGATE BRIDGING.

D. SECURE WATERSTOP IN CORRECT POSITION USING WIRES TIED THROUGH WATERSTOP EYELETS TO ADJACENT REINFORCING STEEL.

2. CONCRETE PLACEMENT AT WATERSTOP

A. CAREFULLY PLACE CONCRETE WITHOUT DISPLACING WATERSTOP FROM PROPER POSITION.

B. THOROUGHLY AND SYSTEMATICALLY VIBRATE CONCRETE AROUND WATERSTOP TO OBTAIN IMPERVIOUS, VOID-FREE CONCRETE IN VICINITY OF JOINT AND TO MAXIMIZE INTIMATE CONTACT BETWEEN CONCRETE AND WATERSTOP.

C. AFTER FIRST POUR, CLEAN UNEMBEDDED WATERSTOP LEG TO ENSURE FULL CONTACT OF SECOND POUR CONCRETE.

3. WATERSTOP SPLICING DEFECTS WHICH ARE UNACCEPTABLE INCLUDE, BUT ARE NOT LIMITED TO:

A. USE OF ADHESIVES, SOLVENTS, AND FREE LAP JOINTS.

B. MISALIGNMENT THAT REDUCES WATERSTOP CROSS-SECTION AREA MORE THAN 15 PERCENT.

C. VISIBLE POROSITY IN THE WELDED JOINT, INCLUDING PINHOLES, CHARRED OR BURNT MATERIAL

D. VISIBLE SIGNS OF SPLICE SEPARATION WHEN COOLED SPLICES ARE BENT BY HAND AT A SHARP ANGLE.

E. EDGE WELDING.

4. WATERSTOP SPLICE FABRICATIONS

A. PROVIDE FACTORY FABRICATED WATERSTOP INTERSECTIONS, LEAVING ONLY STRAIGHT BUTT JOINT SPLICES FOR THE FIELD.

B. USE TEFLON COVERED THERMOSTATICALLY CONTROLLED WATERSTOP SPLICING IRON AT 380 DEG. F TO 410 DEG. F FOR TPER.

C. WATERSTOP INTERSECTIONS AND DIRECTIONAL CHANGES TO BE MITER CUT AND HEAT WELDED WITH CENTERBULB AND RIBS ALIGNED TO MAINTAIN CONTINUITY.

D. SPLICES TO BE FREE FROM DEFECTS AS DEFINED IN PART 3.

REVIEWED FOR CODE COMPLIANCE
Thomas W Peterson
12/14/2023
DIVISION OF FACILITIES CONSTRUCTION AND MANAGEMENT

DFCM CODE COMPLIANCE OFFICER

NO.	REVISIONS	BY	DATE
	PUBLISHED		
1	PLAN REVIEW	BM	11/16/23

This document or any part thereof in detail or design concept is the property of Forsgren Associates Inc. and shall not be copied without the written authorization of Forsgren Associates Inc.

DRAWN K. Osterlin
DESIGNED B. Maughan
APPROVED B. Maughan
QA C. Rasmussen

ATTENTION
LINE IS 2-INCHES
AT 24"x36" SIZE
IF NOT 2-INCHES, SCALE DRAWING ACCORDINGLY

PROFESSIONAL STRUCTURAL ENGINEER
No.7720989
BENJAMIN M. MAUGHAN
11/16/2023
STATE OF UTAH

LOGAN FISH HATCHERY
UTAH DIVISION OF WILDLIFE RESOURCES
1465 WEST 200 NORTH
LOGAN, UTAH 84321

UTAH DNR WILDLIFE RESOURCES

FORSGREN Associates Inc.
95 WEST 100 SOUTH, STE. 115, LOGAN, UT 84321
PH: 435.227.0333 FAX: 435.227.0334

Blue Stakes of UTAH 811 Bluestakes.org

WARM WATER AQUACULTURE BUILDING
LOGAN HATCHERY IMPROVEMENT PROJECT

STRUCTURAL NOTES

PROJECT NO: 14-23-0005
SHEET NO: S001
DATE: 10-4-2023
PAGE NO: 26

REINFORCEMENT LAP LENGTHS				
CONCRETE DESIGN STRENGTH - 4000 PSI				
BAR SIZE	#3	#4	#5	#6
TOP BAR	1'-7"	2'-1"	2'-7"	3'-1"
OTHER BAR	1'-3"	1'-7"	2'-0"	2'-5"

NOTES:

1. ALL REINFORCEMENT LAPS, UNLESS OTHERWISE NOTED, SHALL SATISFY THE MINIMUM REQUIREMENTS SHOWN IN THE TABLE "REINFORCEMENT LAP LENGTHS."
2. TOP BARS SHALL BE DEFINED AS ANY HORIZONTAL BARS PLACED SUCH THAT MORE THAN 12" OF FRESH CONCRETE IS CAST IN THE MEMBER BELOW THE BAR, IN ANY SINGLE POUR. HORIZONTAL WALL BARS ARE CONSIDERED TOP BARS.

RECOMMENDED END HOOKS					
BAR SIZE	D	180° HOOKS		90° HOOKS	HOOK EMBED DEPTH
		A	B	A	
#3	2½"	5"	3"	6"	7"
#4	3"	6"	4"	8"	9"
#5	3¾"	7"	5"	10"	12"
#6	4½"	8"	6"	1'-0"	14"

STD. CONCRETE HOOK SCHEDULE

NTS (IN ACCORDANCE WITH ACI 318-14)

NOTE: EMBED BARS WITH HOOKS TO THE DEPTH SHOWN.

ALL GRADES OF STEEL (MIN. YIELD STRENGTHS)
D = FINISHED INSIDE BEND DIAMETER
d = BAR DIAMETER

D = 6d FOR #3 THROUGH #8
D = 8d FOR #9, #10 AND #11
D = 10d FOR #14 AND #18

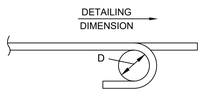

180° HOOK

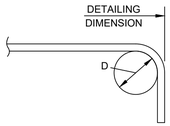

90° HOOK

TABLE 1705.3 REQUIRED SPECIAL INSPECTIONS AND TESTS OF CONCRETE CONSTRUCTION

VERIFICATION AND INSPECTION	CONTINUOUS	PERIODIC	REFERENCED STANDARD	IBC REFERENCE
1. INSPECTION OF REINFORCING STEEL, INCLUDING PRESTRESSING TENDONS, AND VERIFY PLACEMENT.	--	X	ACI 318 CH. 20, 25.2, 25.3, 26.6.1-26.6.3	1908.4
2. INSPECT ANCHORS CAST IN CONCRETE.	--	X	ACI 318:17.8.2	--
3. INSPECT ANCHORS POST-INSTALLED IN HARDENED CONCRETE MEMBERS.				
a. ADHESIVE ANCHORS INSTALLED IN HORIZONTALLY OR UPWARDLY INCLINED ORIENTATIONS TO RESIST SUSTAINED TENSION LOADS.	X	--	ACI 318:17.8.2.4	--
b. MECHANICAL ANCHORS AND ADHESIVE ANCHORS NOT DEFINED IN 3.a.	--	X	ACI 318: 17.8.2	--
4. VERIFYING USE OF REQUIRED DESIGN MIX.	--	X	ACI 318: CH. 19, 26.4.3, 26.4.4	1904.1, 1904.2, 1908.2, 1908.3
5. PRIOR TO CONCRETE PLACEMENT, FABRICATE SPECIMENS FOR STRENGTH TESTS, PERFORM SLUMP AND AIR CONTENT TESTS, AND DETERMINE THE TEMPERATURE OF THE CONCRETE.	X	--	ASTM C172, ASTM C31, ACI 318: 26.4, 26.12	1908.10
6. INSPECT CONCRETE AND SHOTCRETE PLACEMENT FOR PROPER APPLICATION TECHNIQUES.	X	--	ACI 318: 26.5	1908.6, 1908.7, 1908.8
7. VERIFY MAINTENANCE OF SPECIFIED CURING TEMPERATURE AND TECHNIQUES.	--	X	ACI 318: 26.5.3-26.5.5	1908.9
8. INSPECT FORMWORK FOR SHAPE, LOCATION AND DIMENSIONS OF THE CONCRETE MEMBER BEING FORMED.	--	X	ACI 318: 26.11.1.2(b)	--

TABLE 1705.6 REQUIRED SPECIAL INSPECTIONS AND TESTS OF SOILS

VERIFICATION AND INSPECTION	CONTINUOUS DURING TASK LISTED	PERIODICALLY DURING TASK LISTED
1. VERIFY MATERIALS BELOW SHALLOW FOUNDATIONS ARE ADEQUATE TO ACHIEVE THE DESIGN BEARING CAPACITY.	--	X
2. VERIFY EXCAVATIONS ARE EXTENDED TO PROPER DEPTH AND HAVE REACHED PROPER MATERIAL.	--	X
3. PERFORM CLASSIFICATION AND TESTING OF COMPACTED FILL MATERIALS.	--	X
4. VERIFY USE OF PROPER MATERIALS, DENSITIES AND LIFT THICKNESSES DURING PLACEMENT AND COMPACTION OF COMPACTED FILL.	X	--
5. PRIOR TO PLACEMENT OF COMPACTED FILL, OBSERVE SUBGRADE AND VERIFY THAT SITE HAS BEEN PREPARED PROPERLY.	--	X

QUALITY ASSURANCE PLAN

1. SPECIAL INSPECTION SHALL BE PROVIDED ACCORDING TO IBC CHAPTER 17 FOR THE ITEMS IDENTIFIED IN THIS SECTION AND ON THE CONTRACT DOCUMENTS.
2. THE NAMES AND CREDENTIALS OF SPECIAL INSPECTORS TO BE USED SHALL BE SUBMITTED TO THE BUILDING DEPARTMENT WHEN APPLYING FOR A BUILDING PERMIT.
3. SPECIAL INSPECTION REPORTS SHALL BE DELIVERED TO THE OWNER BI-WEEKLY OR MORE FREQUENTLY AS REQUIRED BY THE INSPECTOR OR BUILDING OFFICIAL.
4. OFF-SITE FABRICATION: WHERE FABRICATION OF STRUCTURAL LOAD-BEARING MEMBERS AND ASSEMBLIES IS BEING PERFORMED ON THE PREMISES OF A FABRICATORS SHOP, SPECIAL INSPECTION OF THE FABRICATED ITEMS SHALL BE IN ACCORDANCE WITH IBC SECTION 1704.2.5 UNLESS THE FABRICATOR IS APPROVED ACCORDING TO IBC SECTION 1704.2.5.1.
5. CONCRETE CONSTRUCTION: SPECIAL INSPECTIONS AND VERIFICATIONS SHALL BE PROVIDED IN ACCORDANCE WITH TABLE 1705.3.
6. SOILS: SPECIAL INSPECTION SHALL BE PROVIDED FOR PLACEMENT OF FILL 12 INCHES OR MORE DEEP IN ACCORDANCE WITH SECTION 1705.6.

QUALITY ASSURANCE CONTRACTOR RESPONSIBILITY

EACH CONTRACTOR RESPONSIBLE FOR THE CONSTRUCTION OF A SEISMIC-FORCE-RESISTING SYSTEM, DESIGNATED SEISMIC SYSTEM, OR COMPONENT LISTED IN THE QUALITY ASSURANCE PLAN SHALL SUBMIT A WRITTEN CONTRACTOR'S STATEMENT OF RESPONSIBILITY TO THE BUILDING OFFICIAL AND TO THE OWNER PRIOR TO THE COMMENCEMENT OF WORK ON THE SYSTEM OR COMPONENT IN ACCORDANCE WITH IBC SECTION 1704.4. THE CONTRACTOR'S STATEMENT OF RESPONSIBILITY SHALL CONTAIN THE FOLLOWING:

A. ACKNOWLEDGMENT OF AWARENESS OF THE SPECIAL REQUIREMENTS CONTAINED IN THE QUALITY ASSURANCE PLAN.

B. ACKNOWLEDGMENT THAT CONTROL WILL BE EXERCISED TO OBTAIN CONFORMANCE WITH THE CONSTRUCTION DOCUMENTS APPROVED BY THE BUILDING OFFICIAL.

C. PROCEDURES FOR EXERCISING CONTROL WITHIN THE CONTRACTOR'S ORGANIZATION, THE METHOD AND FREQUENCY OF REPORTING, AND THE DISTRIBUTION OF REPORTS.

D. IDENTIFICATION AND QUALIFICATIONS OF THE PERSON(S) EXERCISING SUCH CONTROL AND THE POSITION(S) IN THE ORGANIZATION.

REVIEWED FOR CODE COMPLIANCE
Thomas W Peterson
12/14/2023
DIVISION OF FACILITIES CONSTRUCTION AND MANAGEMENT

DFCM CODE COMPLIANCE OFFICER

NO.	REVISIONS	BY	DATE
	PUBLISHED		
1	PLAN REVIEW	BM	11/16/23

This document or any part thereof in detail or design concept is the property of Forsgren Associates Inc. and shall not be copied without the written authorization of Forsgren Associates Inc.

DRAWN K. Osterlin
DESIGNED B. Maughan
APPROVED B. Maughan
QA C. Rasmussen

ATTENTION
LINE IS 2-INCHES
AT 24"x36" SIZE
IF NOT 2-INCHES, SCALE DRAWING ACCORDINGLY

PROFESSIONAL STRUCTURAL ENGINEER
No.7720989
BENJAMIN M. MAUGHAN
11/16/2023
STATE OF UTAH

LOGAN FISH HATCHERY
UTAH DIVISION OF WILDLIFE RESOURCES
1465 WEST 200 NORTH
LOGAN, UTAH 84321

UTAH DNR WILDLIFE RESOURCES

FORSGREN Associates Inc.
95 WEST 100 SOUTH, STE. 115, LOGAN, UT 84321
PH: 435.227.0333 FAX: 435.227.0334

Blue Stakes of UTAH 811 Bluestakes.org

WARM WATER AQUACULTURE BUILDING
LOGAN HATCHERY IMPROVEMENT PROJECT

STRUCTURAL NOTES

PROJECT NO: 14-23-0005
SHEET NO: S002
DATE: 10-4-2023

MEMBER SCHEDULES

MARK	DIMENSIONS	REINFORCEMENT & OTHER INFORMATION
FOOTING SCHEDULE		
FC1.5	1'-6"x12" CONT.	(2) #4 BARS CONT. BOTTOM
FS3.0	3'-0"x3'-0"x12"	(4) #4 BARS E.W., BOTTOM
FS4.0	4'-0"x4'-0"x12"	(4) #5 BARS E.W., BOTTOM
FS7.0	7'-0"x7'-0"x14"	(7) #5 BARS E.W., BOTTOM
FS7.0T	7'-0"x7'-0"x14"	(7) #5 BARS E.W., BOTTOM & TOP
PIER SCHEDULE		
CP1	2'-0" x 2'-2" DETAIL 1/S501	(5) #5 BARS IN SHORT FACE & (5) #5 BARS IN LONG FACE W/ #3 PIER TIES AT 8" O.C.
CP2	1'-4" x 2'-2" DETAIL 2/S501	(3) #5 BARS IN SHORT FACE & (5) #5 BARS IN LONG FACE W/ #3 PIER TIES AT 8" O.C.
CP3	1'-8" x 2'-6" DETAIL 3/S501	(4) #5 BARS IN SHORT FACE & (6) #5 BARS IN LONG FACE W/ #3 PIER TIES AT 8" O.C.

NOTES:
SEE PIER DETAILS FOR ADDITIONAL REQUIREMENTS ON TIE CONFIGURATIONS AND U-BAR LOCATIONS.

STEM WALL SCHEDULE

MARK	DIMENSIONS	REINFORCEMENT & OTHER INFORMATION
CW6	6" STEM WALL	#4 AT 18" O.C. VERT. & (2) #4 HORIZ. CENTERED IN WALL
CW8	8" STEM WALL	#4 AT 18" O.C. VERT. & #4 AT 12" O.C. HORIZ. CENTERED IN WALL
GRADE BEAM SCHEDULE		
GB1	12" WIDE x 10" TALL	(4) #6 BARS TOP & BOTTOM W/ #3 TIES AT 12" O.C.
GB2	16" WIDE x 20" TALL	(5) #6 BARS TOP & BOTTOM W/ #3 TIES AT 12" O.C., PROVIDE #3 TIES AT 5" O.C. THRU STEP AND EXTEND 5'-0" FROM STEP EACH WAY

NOTES:
GB2 OCCURS AT GRID LINE 5 ONLY

ANCHOR BOLT SCHEDULE

MARK	ANCHOR BOLT AMOUNT / SIZE	ANCHOR GRADE	EMBEDMENT	NOTES
AB1	(4) 3/4" ANCHORS W/ 5" x 5" PATTERN	ASTM F1554 GRADE 36	12"	
AB2	(4) 1-1/4" ANCHORS W/ 5" x 5" PATTERN	ASTM F1554 GRADE 55	20"	EMBEDMENT WASHER REQ'D.

NOTES:
SEE DETAIL BELOW FOR ANCHOR BOLD CONFIGURATIONS.
VERIFY ANCHOR BOLT PATTERNS & LOCATIONS WITH STEEL BUILDING MFR.

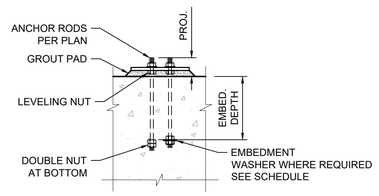

LEGEND

- FOUNDATION WALL
- FOOTING
- RECESSED WALL
- GRADE BEAM
- FOOTING/ GRADE BEAM STEP S — — S

FOUNDATION PLAN NOTES:

1. CONTRACTOR TO BID FOUNDATION AS CURRENTLY DRAWN, BUT THIS FOUNDATION PLAN IS NOT FOR CONSTRUCTION. ALL FOOTINGS, PIERS, CONCRETE REINFORCING AND ANCHOR SIZES ARE PRELIMINARY PENDING DESIGN OF METAL BUILDING. PRIOR TO CONSTRUCTION, METAL BUILDING MANUFACTURER SHALL PROVIDE ALL LOADS NECESSARY FOR FOUNDATION DESIGN TO ENGINEER OF RECORD FOR REVIEW TO VERIFY THAT FOUNDATION IS ADEQUATELY SIZED FOR METAL BUILDING. MAINTAIN COLUMN SPACING AS SHOWN FOR METAL BUILDING DESIGN. METAL BUILDING MANUFACTURER IS REQUIRED TO BE DFCM APPROVED FABRICATOR. (1)
2. COORDINATE ALL SLAB ELEVATIONS AND DIMENSIONS WITH THE PROCESS MECHANICAL DRAWINGS
3. PROVIDE 1/2" EXPANSION MATERIAL AT SLAB INTERFACE TO EXTERIOR CONCRETE WALL EXCEPT AT LOCATIONS WHERE GRADE BEAMS CONNECT TO CONCRETE PIERS.
4. CENTER ALL FOOTINGS ON CONCRETE PIERS.
5. AT GRADE BEAMS, PLACE CONTROL JOINTS AT EDGE OF GRADE BEAM AS SHOWN IN DETAIL 7/S501.
6. FOR CONCRETE FOUNDATION WALL CORNERS SEE DETAIL 4/S501.
7. FOR REINFORCING SPLICES PROVIDE LAP LENGTHS AS FOUND IN THE REINFORCING LAP LENGTHS SCHEDULE ON SHEET S002. WALL HORIZONTAL BARS AND GRADE BEAM BARS REQUIRE TOP BAR LAP LENGTHS, SEE SCHEDULE.
8. LFRS - LATERAL FORCE RESISTING SYSTEM FRAME LOCATION.
9. WHERE TANKS ARE TO BE INSTALLED IN PITS, REFER TO MECH. DRAWINGS, DETAIL 8/S502, AND COORDINATE W/ TANK MANUFACTURER FOR ALL BOTTOM OF PIT ELEVATIONS, DIAMETERS, AND WIDTHS. TANKS SHALL BE PLACED ON SELF LEVELING COMPOUND IN PITS. PROVIDE ADEQUATE CLEARANCE AND TOLERANCE FOR EQUIPMENT PLACEMENT.
10. ALL PIT AND AND TRENCH CONCRETE SHALL CONTAIN XYPEX
11. SUGGESTED CONCETE CONSTRUCTION SEQUENCE: 1. EXTERIOR FOUNDATIONS, SUMPS, AND DEEP PITS, 2. INTERIOR FOUNDATIONS, DEEP GRADE BEAM, SHALLOW PITS, AND TRENCHES, 3. SHALLOW GRADE BEAMS WITH SLAB.
12. FOR FOOTING STEPS SEE DETAIL 5/S501

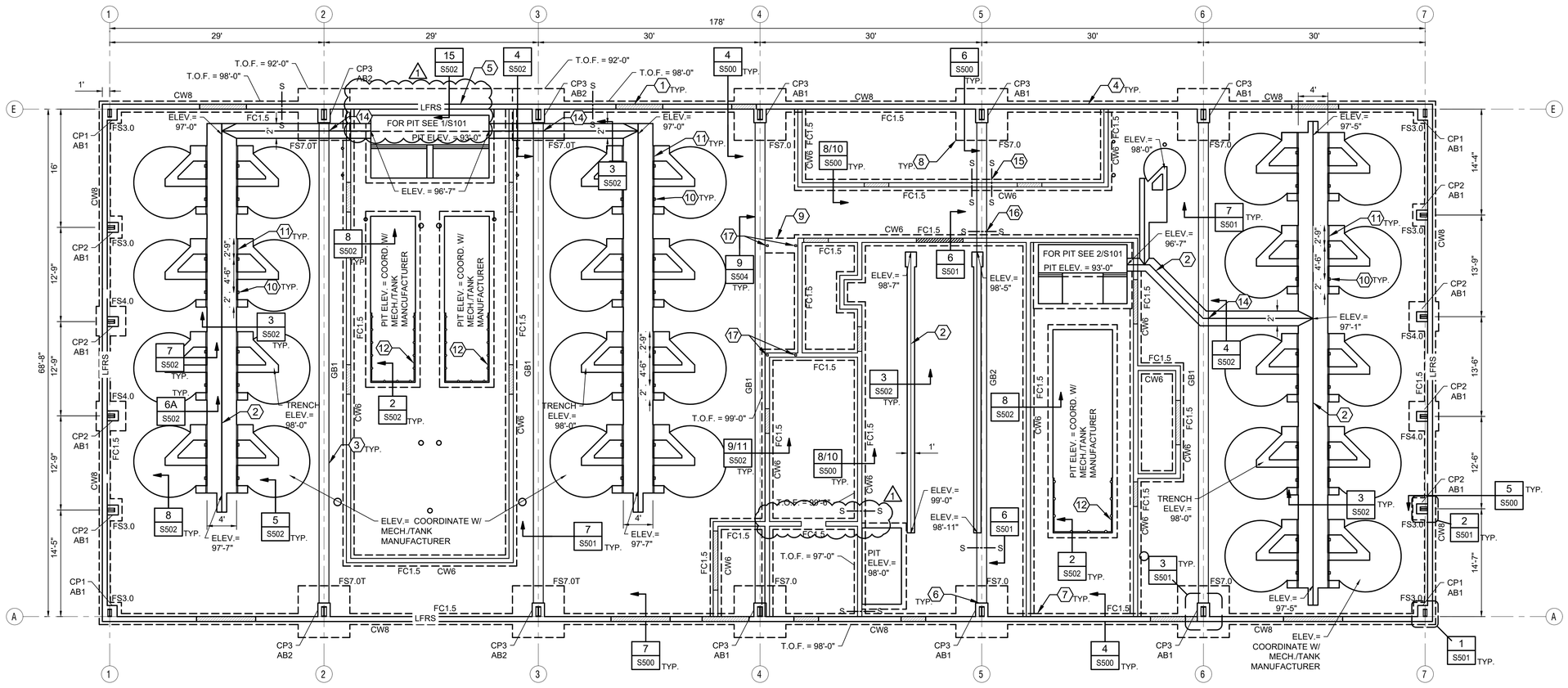

FOUNDATION PLAN
SCALE: 1/8"=1'-0"

STRUCTURAL KEY NOTES

1. RECESS CONCRETE WALL AT HATCHED ENTRY WAY, TYPICAL, SEE DETAIL 7/S500.
2. TRENCH, TYP. SEE 3/S502
3. GRADE BEAM, TYP.
4. FOUNDATION WALL, TYP.
5. RETAINING WALL, SEE DETAIL 1/S502
6. CONCRETE PIER, TYP. SEE PIER DETAILS ON S501
7. CONTINUOUS FOOTING, TYP.
8. SPOT FOOTING, TYP.
9. THICKENED SLAB FOOTING FOR STAIR SUPPORT. CENTER UNDER STAIR STRINGER BEARING
10. HSS 3x3x1/4 STAINLESS STEEL GRATING SUPPORT COLUMNS, TYP.
11. L1-1/2x1-1/2x1/4 WELDED TO C3x3.5 STAINLESS STEEL GRATING SUPPORT, TYP. SEE 7/S502
12. GUARD RAIL BY OTHERS. SEE DETAIL 8/S501 FOR ANCHORAGE OF SLEEVE FOR REMOVABLE GUARD RAILS.
13. NOT USED
14. TRENCH FLOWS BELOW GRADE BEAM SEE DETAILS 3/S500 AND 4/S502
15. FOOTING STEPS BELOW GRADE BEAM, CONTINUE GRADE BEAM REINFORCING THRU WALL.
16. GRADE BEAM STEPS BELOW FOOTING AND TRENCH SEE DETAIL 6/S501
17. STEEL COLUMN STAIR SUPPORT LOCATION

ELEVATIONS

FINISHED FLOOR ELEVATION = 100'-0"
TOP OF PIER ELEVATION = 100'-8"
TOP OF STEM WALL ELEVATION = 100'-8"
TOP OF FOOTING ELEVATION = 98'-0" U.N.O.
TOP OF INTERIOR FOOTING ELEVATION = 99'-6" U.N.O.

REVIEWED FOR CODE COMPLIANCE
Thomas W Peterson
12/1/4/2023
DIVISION OF FACILITIES CONSTRUCTION AND MANAGEMENT
DFCM CODE COMPLIANCE OFFICER

NO.	REVISIONS	BY	DATE
	PUBLISHED		
1	PLAN REVIEW	BM	11/16/23

This document or any part thereof in detail or design concept is the property of Forsgren Associates Inc. and shall not be copied without the written authorization of Forsgren Associates Inc.

DRAWN K. Osterlin
DESIGNED B. Maughan
APPROVED B. Maughan
QA C. Rasmussen

ATTENTION
LINE IS 2-INCHES
AT 24"x36" SIZE
IF NOT 2-INCHES, SCALE DRAWING ACCORDINGLY

REGISTERED PROFESSIONAL ENGINEER
No.7720889
BENJAMIN M. MAUGHAN
11/16/2023
STATE OF UTAH

LOGAN FISH HATCHERY
UTAH DIVISION OF WILDLIFE RESOURCES
1465 WEST 200 NORTH
LOGAN, UTAH 84321

UTAH DNR WILDLIFE RESOURCES

FORSGREN Associates Inc.
95 WEST 100 SOUTH, STE. 115, LOGAN, UT 84321
PH: 435.227.0333 FAX: 435.227.0334

Blue Stakes of UTAH 811 Bluestakes.org

WARM WATER AQUACULTURE BUILDING
LOGAN HATCHERY IMPROVEMENT PROJECT

FOUNDATION

PROJECT NO: 14-23-0005
SHEET NO: S100
DATE: 10-4-2023
PAGE NO: 28

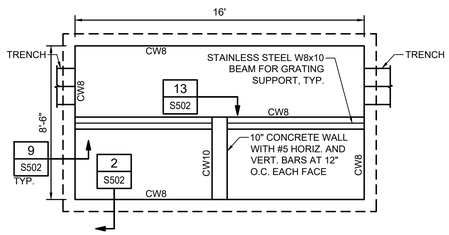

MODULE 1 & 2 SUMP
SCALE: 1/4" = 1'-0" 1

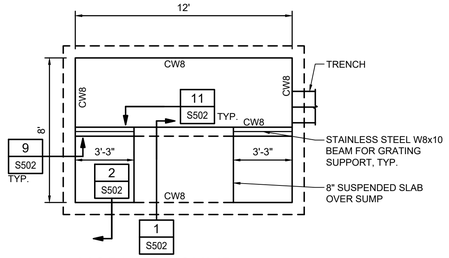

MODULE 3 SUMP
SCALE: 1/4" = 1'-0" 2

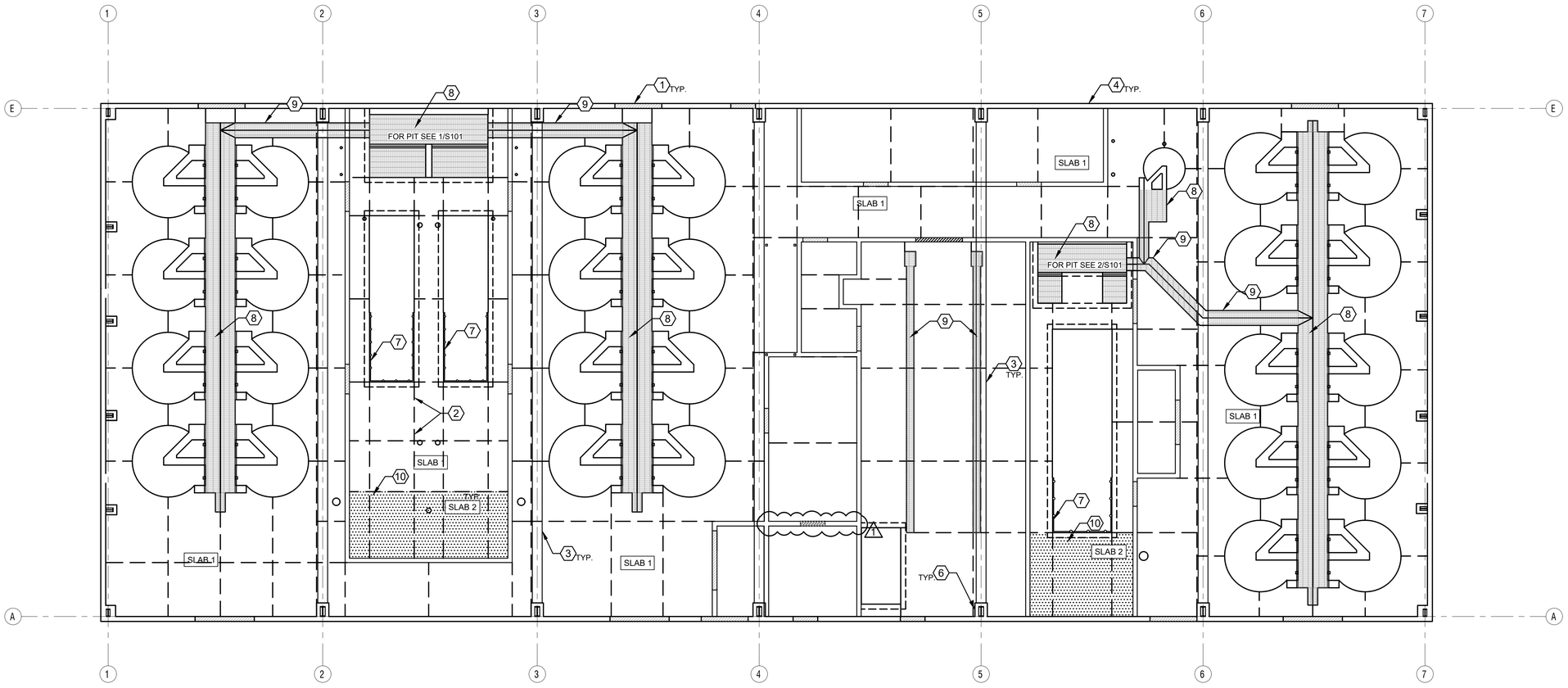

SAWCUT PLAN
SCALE: 1/8"=1'-0"

SLAB PLAN NOTES:
1. VERIFY ALL DIMENSIONS FOR CREATION OF METAL BUILDING SYSTEM PLAN.
2. PROVIDE 1/2" EXPANSION MATERIAL AT SLAB INTERFACE TO EXTERIOR CONCRETE WALL AT ALL LOCATIONS, U.N.O.
3. DOWEL PLATE CONSTRUCTION JOINTS ARE TO BE PROVIDED AT COORDINATED EQUAL SPACING INCREMENTS AT THE END OF EACH SLAB PLACEMENT PERIOD AND SHALL BE ALIGNED WITH CONTROL JOINTS SHOWN ON THE PLAN. CONTRACTOR SHALL COORDINATE DOWEL PLATE CONSTRUCTION JOINT LOCATIONS BASED ON PRACTICAL WORK LOAD PLACEMENT REQUIREMENTS. IF CONTRACTOR HAS THE ABILITY TO PLACE ENTIRE BUILDING SLAB IN ONE PERIOD, DOWEL PLATE CONSTRUCTION JOINTS ARE NOT REQUIRED.

SLAB-ON-GRADE SCHEDULE		
SLAB1	5" SLAB-ON-GRADE	#4 AT 16" O.C. E.W. AT CENTER OF SLAB
SLAB2	8" SLAB-ON-GRADE	#5 AT 16" O.C. E.W. AT CENTER OF SLAB

NOTE:
PLACE 4" OF CLEAN 3/4" ROCK BELOW SLAB OVER PREPARED SUBGRADE AS REQUIRED BY THE GEOTECHNICAL REPORT.

(#) STRUCTURAL KEY NOTES

1. RECESS CONCRETE WALL AT HATCHED ENTRY WAY, TYPICAL, SEE DETAIL 7/S500.
2. CONTROL JOINT TYPICAL SEE DETAIL 1/S500 OR DETAIL 2/S500. REFER TO FOUNDATION PLAN NOTES FOR COORDINATION OF SAW CUT CONTROL JOINTS (CJ) AND DOWEL PLATE CONSTRUCTION JOINTS (DCJ).
3. GRADE BEAM, TYP.
4. FOUNDATION WALL, TYP.
5. NOT USED
6. CONCRETE PIER, TYP. SEE PEIR DETAILS ON S501
7. REMOVABLE GUARD RAIL AT SUMPS SEE DETAIL 8/S501
8. FOR GRATING SPANS GREATER THAN 2 FT USE 1-1/4"x3/16" 19-S-4 SWAGE-LOCKED GRATING, SEE DETAILS 6A & 7 ON S502 FOR PLACEMENT OF GRATING SUPPORT ANGLES.
9. FOR GRATING SPANS 2 FT OR LESS USE 3/4"x1/8" 19-S-4 SWAGE-LOCKED ALUMINUM GRATING, SEE DETAIL 6B ON S502 FOR PLACEMENT OF GRATING SUPPORT ANGLES.
10. THICKEN SLAB AT HATCHED AREA, SEE SLAB 2 REQUIREMENTS

LEGEND	
FOUNDATION WALL	
CONTROL JOINT	
RECESSED WALL	
GRADE BEAM	
TRENCH GRATING	

REVIEWED FOR CODE COMPLIANCE
Thomas W Peterson
12/14/2023
DIVISION OF FACILITIES CONSTRUCTION AND MANAGEMENT
DFCM CODE COMPLIANCE OFFICER

NO.	REVISIONS	BY	DATE
	PUBLISHED		
1	PLAN REVIEW	BM	11/16/23

This document or any part thereof in detail or design concept is the property of Forsgren Associates Inc. and shall not be copied without the written authorization of Forsgren Associates Inc.

DRAWN K. Osterlin
DESIGNED B. Maughan
APPROVED B. Maughan
QA C. Rasmussen

ATTENTION
LINE IS 2-INCHES
AT 24"x36" SIZE
IF NOT 2-INCHES, SCALE DRAWING ACCORDINGLY

PROFESSIONAL STRUCTURAL ENGINEER
No.7720989
BENJAMIN M. MAUGHAN
11/16/2023
STATE OF UTAH

LOGAN FISH HATCHERY
UTAH DIVISION OF WILDLIFE RESOURCES
1465 WEST 200 NORTH
LOGAN, UTAH 84321

UTAH DNR WILDLIFE RESOURCES

FORSGREN Associates Inc.
95 WEST 100 SOUTH, STE. 115, LOGAN, UT 84321
PH: 435.227.0333 FAX: 435.227.0334

Blue Stakes of UTAH 811 Bluestakes.org

WARM WATER AQUACULTURE BUILDING
LOGAN HATCHERY IMPROVEMENT PROJECT

SLAB PLAN

PROJECT NO: 14-23-0005
SHEET NO: S101
DATE: 10-4-2023
PAGE NO: 29

FLOOR DIAPHRAGM SCHEDULE

MARK	SHEATHING		FASTENERS				PANEL FIELD	BLOCKING DIAPHRAGM
	MINIMUM NOMINAL PANEL THICKNESS	SPAN RATING	MINIMUM FASTENER PENETRATION IN FRAMING	BOUNDARY	CONTINUOUS PANEL EDGE	OTHER PANEL EDGES		
WD-1	23/32" T & G	48/24	1 1/2"	#10 SCREWS @ 6"	#10 SCREWS @ 6"	#10 SCREWS @ 6"	#10 SCREWS @ 12"	NO

NOTES:

1. USE ONLY APA RATED SHEATHING MEETING THE REQUIREMENTS OF IBC SECTION 2303.1.5.
2. USE #10-16 SCREWS FOR FASTENERS.
3. FASTENERS SHALL BE PLACED NOT LESS THAN 3/8" IN FROM PANEL EDGES.

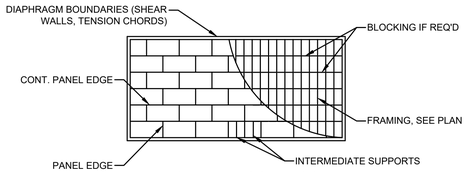

TYPICAL PLYWOOD FLOOR DIAPHRAGM LAYOUT

WALL SCHEDULE

MARK	STUDS	TOP AND BTM. TRACK	BRIDGING
CFW1	600S162-54 AT 16" O.C.	600T150-54	YES, AT MID HEIGHT SEE DETAIL 8/S503
CFW2	(2) 350S200-54 AT EACH FLOOR JOIST	350T150-54	YES, AT MID HEIGHT SEE DETAIL 8/S503

NOTE: GALVANIZE ALL FRAMING. FOR STUD TO BASE TRACK AND FOUNDATION SEE 2 & 3/S503. FOR TOP PLATE SPLICE CONNECTION SEE DETAIL 13/S503, PROVIDE STRAP BRACING AS SHOWN IN DETAIL 1/S102 AT LOCATIONS DENOTED BY X-BRACING IN THE PLAN

BEAM SCHEDULE

B-1	600S162-54 BOXED HEADER w/ WEB STIFFENERS AT ENDS
B-2	800S162-54 BOXED HEADER w/ WEB STIFFENERS AT ENDS
B-3	1200T150-54 CONT. SINGLE MEMBER w/ WEB STIFFENERS AT ENDS

NOTE: SEE DETAIL 4/S503 AND 6/S503 FOR B1 AND B2 BEAMS. FOR B3 BEAM CONTINUE TRACK RIM MEMBER ALONG WALL EDGE AND PROVIDE WEB STIFFENERS AT END BEARING LOCATIONS. GALVANIZE ALL MEMBERS

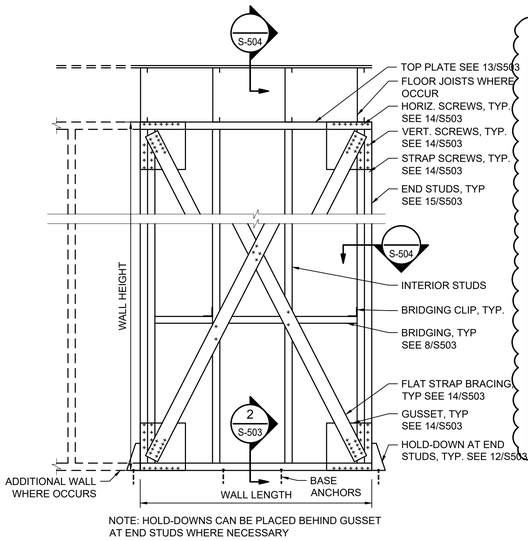

NOTE: HOLD-DOWNS CAN BE PLACED BEHIND GUSSET AT END STUDS WHERE NECESSARY

X-BRACING WALL

LABEL	X1	X2	X3	X4
WALL LENGTH	10'-9" MIN.	12'-0"	8'-0"	4'-0" MIN.
WALL HEIGHT	PER PLAN	PER PLAN	PER PLAN	PER PLAN
FLAT STRAP BRACING	0.0566"x3" 50 KSI	0.0566"x3" 50 KSI	0.0566"x3" 50 KSI	0.0566"x3" 50 KSI
BRIDGING	(2) ROWS EVEN SPACING	(2) ROWS EVEN SPACING	(2) ROWS EVEN SPACING	(2) ROWS EVEN SPACING
END STUDS	(2) 600S162-54	(2) 600S162-54	(2) 600S162-54	(2) 600S162-54
INTERIOR STUDS	600S162-54 @ 16" O.C.	600S162-54 @ 16" O.C.	600S162-54 @ 16" O.C.	600S162-54 @ 16" O.C.
HOLD-DOWNS	SIMPSON S/HDU6	SIMPSON HTT4	SIMPSON HTT5	SIMPSON HTT4
HOLD-DOWN ANCHOR	5/8"Ø THREADED ROD W/ 8" EMBEDMENT*	5/8"Ø THREADED ROD W/ 8" EMBEDMENT*	5/8"Ø THREADED ROD W/ 8" EMBEDMENT*	5/8"Ø THREADED ROD W/ 8" EMBEDMENT*
BASE ANCHORS	(6) 3/8"Øx3" TITEN HD ANCHORS	(6) 3/8"Øx3" TITEN HD ANCHORS	(3) 3/8"Øx3" TITEN HD ANCHORS	(2) 3/8"Øx3" TITEN HD ANCHORS

NOTE: HOLD-DOWN ANCHOR MUST EMBED 8" INTO *FOOTING BELOW FOUNDATION WALL. HOLD-DOWN ANCHORS CAN BE CAST IN PLACE WITH DOUBLE NUT AT EMBEDDED END OR POST INSTALLED WITH CHEMICAL ADHESIVE. FLAT STRAP FY=50KSI MIN.

X-BRACING TYP. CONSTRUCTION 1
SCALE: 3/4" = 1'-0"

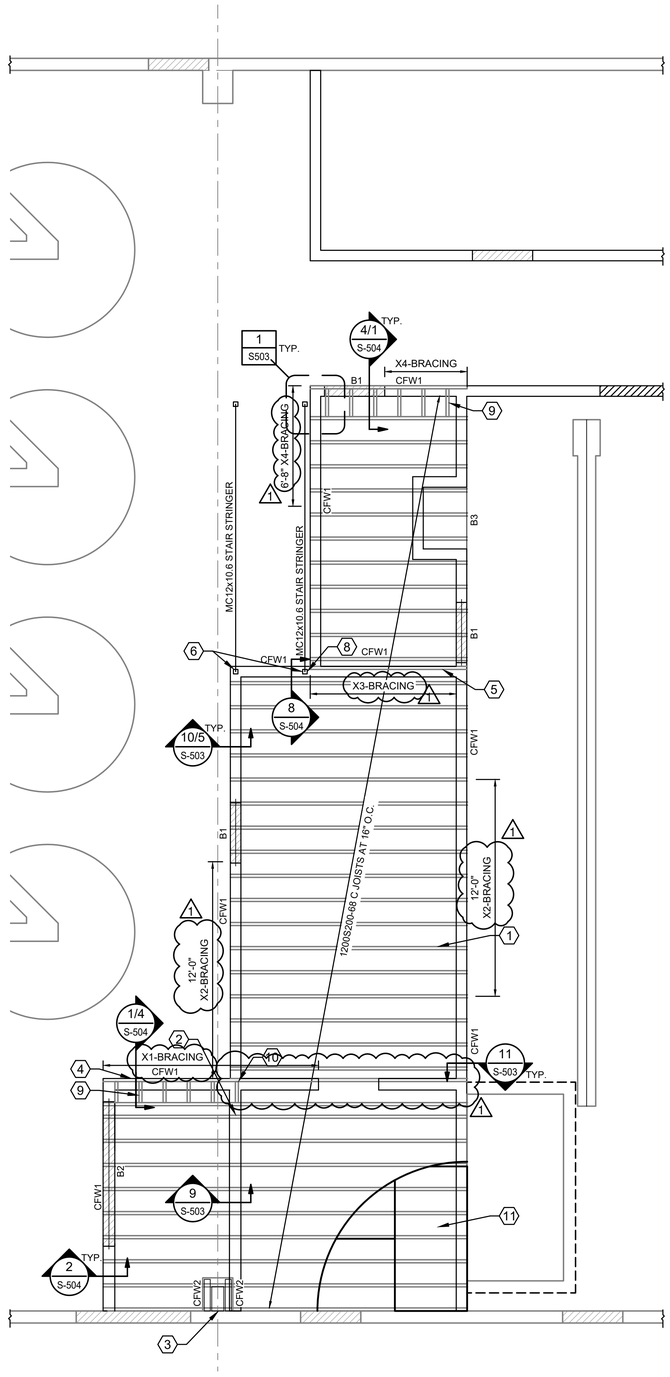

MEZZANINE FRAMING PLAN
SCALE: 1/4"=1'-0"

MEZZANINE FRAMING PLAN NOTES:

1. VERIFY ALL DIMENSIONS FOR CREATION OF METAL BUILDING SYSTEM PLAN
2. FOR MEZZANINE DIAPHRAGM SHEATHING SEE DIAPHRAGM SCHEDULE. SHEATHING TO BE PLACED AS REQUIRED BY WD-1.
3. DOOR JAMB FRAMING, SEE DETAIL 3 & 4/S503
4. BOTTOM RUNNER AND STUD FRAMING, SEE DETAIL 2 & 3/S503
5. HEADER FRAMING, SEE DETAIL 4 & 6 ON S503

STRUCTURAL KEY NOTES

1. FLOOR JOIST, SEE DETAIL 5/S503
2. PROVIDE JOIST BLOCKING AT TOP OF WALL FOR FULL LENGTH OF WALL.
3. PROVIDE 2" MIN SEPARATION FROM MEZZANINE TO STEEL BUILDING COMPONENTS.
4. PROVIDE ADDITIONAL FLOOR JOIST AT WALL, ATTACH JOIST TO WALL WTH #10 SCREWS AT 8" O.C.
5. PROVIDE ADDITIONAL FLOOR JOIST AT WALL, ATTACH JOIST TO WALL WITH #10 SCREWS AT 12" O.C.
6. HSS3x3x1/4" STAIR COLUMN. PROVIDE 1/4"Ø THREADED STUDS AT 16" O.C. UP TWO FACES OF COLUMN FOR ATTACHMENT OF WALL STUDS. WALL STUDS TO BE SOLID WITH NO PUNCHED HOLES EXCEPT AT STUD ATTACHMENT. SEE 5&6/S504
7. JOIST BLOCKING AT 16" O.C.
8. NO HOLD-DOWN REQUIRED HERE WHERE X-BRACING WALL IS ATTACHED DIRECTLY TO STAIR COLUMN BY THREADED STUDS ALONG COLUMN
9. JOIST BLOCKING AT 16" O.C.
10. WALL TOP TRACK TO BE CONTINOUS FROM EAST TO WEST THROUGH THE WALL INTERSECTION
11. SHEATHING PER FLOOR DIAPHRAGM SCHEDULE

LEGEND

- FOUNDATION WALL
- CONTROL JOINT
- RECESSED WALL
- GRADE BEAM

REVIEWED FOR CODE COMPLIANCE
Thomas W Peterson
12/14/2023
DIVISION OF FACILITIES CONSTRUCTION AND MANAGEMENT
DFCM CODE COMPLIANCE OFFICER

NO.	REVISIONS	BY	DATE
	PUBLISHED		
1	PLAN REVIEW	BM	11/16/23

This document or any part thereof in detail or design concept is the property of Forsgren Associates Inc. and shall not be copied without the written authorization of Forsgren Associates Inc.

DRAWN K. Osterlin
DESIGNED B. Maughan
APPROVED B. Maughan
QA C. Rasmussen

ATTENTION
LINE IS 2-INCHES
AT 24"x36" SIZE
IF NOT 2-INCHES, SCALE DRAWING ACCORDINGLY

PROFESSIONAL STRUCTURAL ENGINEER
No.7720989
BENJAMIN M. MAUGHAN
11/16/2023
STATE OF UTAH

LOGAN FISH HATCHERY
UTAH DIVISION OF WILDLIFE RESOURCES
1465 WEST 200 NORTH
LOGAN, UTAH 84321

UTAH DNR WILDLIFE RESOURCES

FORSGREN Associates Inc.
95 WEST 100 SOUTH, STE. 115, LOGAN, UT 84321
PH: 435.227.0333 FAX: 435.227.0334

Blue Stakes of UTAH 811 Bluestakes.org

WARM WATER AQUACULTURE BUILDING
LOGAN HATCHERY IMPROVEMENT PROJECT

MEZZANINE FRAMING

PROJECT NO: 14-23-0005
SHEET NO: S102
DATE: 10-4-2023
PAGE NO: 30

METAL BUILDING PLAN NOTES:

1. VERIFY ALL DIMENSIONS FOR CREATION OF METAL BUILDING SYSTEM PLAN
2. FOR PIPES THAT ARE HUNG VERTICALLY FROM THE METAL BUILDING PROVIDE RIGID LATERAL BRACING TO METAL BUILDING STRUCTURE.

(#) STRUCTURAL KEY NOTES

1. LOCATION OF 50 PLF UNFACTORED VERTICAL PIPING LOAD(COLLATERAL LOAD) TO BE SUPPORTED BY STEEL BUILDING. PROVIDE RIGID LATERAL BRACING AT NO FURTHER THAN 6 FT O.C. TO THE METAL BUILDING STRUCTURE SUPPORTED EQUIPMENT AND PIPING
2. EXTERIOR PIPE SUPPORT, SEE DETAIL 7/S503. PROVIDE FRAMING AND CONNECTIONS NECESSARY TO SUPPORT LATERAL LOADS SHOWN IN DETAIL.

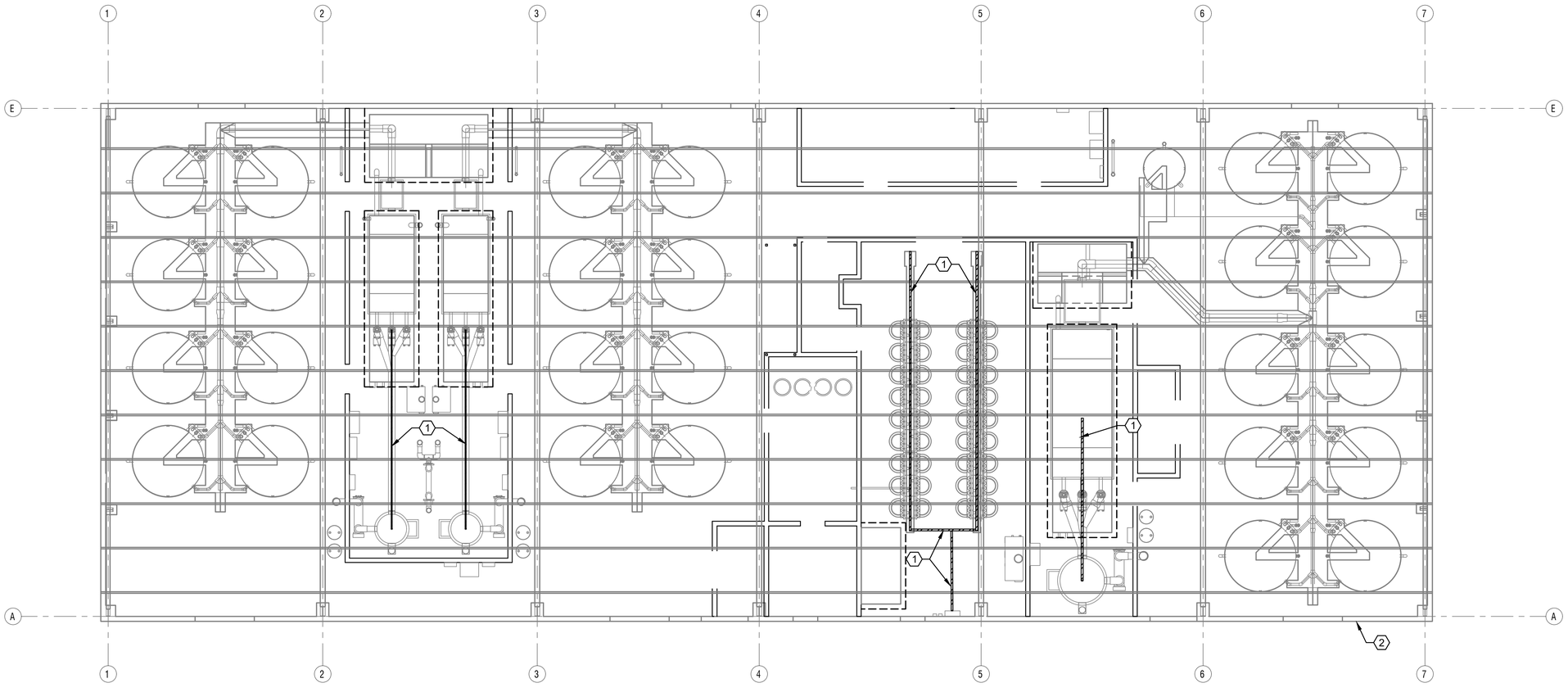

STRUCTURAL STEEL LOADING PLAN
SCALE: 1/8"=1'-0"

REVIEWED FOR CODE COMPLIANCE
Thomas W Peterson
12/14/2023
DIVISION OF FACILITIES CONSTRUCTION AND MANAGEMENT
DFCM CODE COMPLIANCE OFFICER

NO.	REVISIONS	BY	DATE
	PUBLISHED		
1	PLAN REVIEW	BM	11/16/23

This document or any part thereof in detail or design concept is the property of Forsgren Associates Inc. and shall not be copied without the written authorization of Forsgren Associates Inc.

DRAWN K. Osterlin
DESIGNED B. Maughan
APPROVED B. Maughan
QA C. Rasmussen

ATTENTION
LINE IS 2-INCHES
AT 24"x36" SIZE
IF NOT 2-INCHES, SCALE DRAWING ACCORDINGLY

REGISTERED STRUCTURAL ENGINEER
No.7720989
BENJAMIN M. MAUGHAN
11/16/2023
STATE OF UTAH

LOGAN FISH HATCHERY
UTAH DIVISION OF WILDLIFE RESOURCES
1465 WEST 200 NORTH
LOGAN, UTAH 84321

UTAH DNR WILDLIFE RESOURCES

FORSGREN Associates Inc.
95 WEST 100 SOUTH, STE. 115, LOGAN, UT 84321
PH: 435.227.0333 FAX: 435.227.0334

Blue Stakes of UTAH 811 Bluestakes.org

WARM WATER AQUACULTURE BUILDING
LOGAN HATCHERY IMPROVEMENT PROJECT

METAL BUILDING LOADS

PROJECT NO: 14-23-0005
SHEET NO: S103
DATE: 10-4-2023
PAGE NO: 31

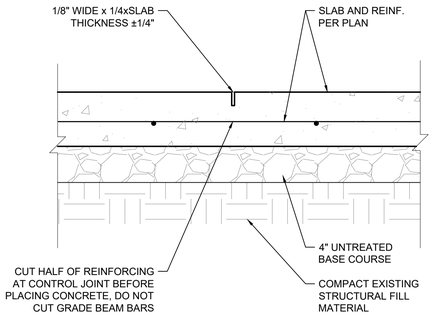

CONTROL JOINT (CJ) 1

SCALE: 1-1/2" = 1'-0"

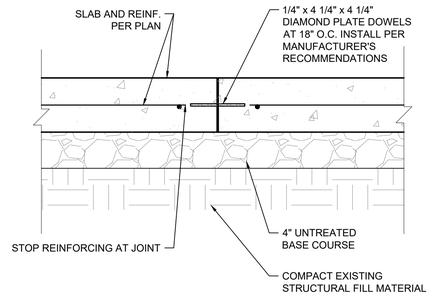

DOWEL PLATE CONSTRUCTION JOINT (DCJ) 2

SCALE: 1-1/2" = 1'-0"

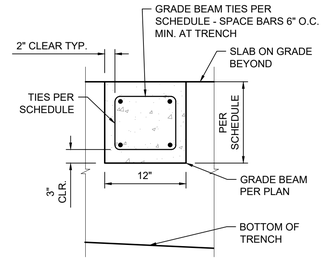

GRADE BEAM AT TRENCH 3

SCALE: 3/4" = 1'-0"

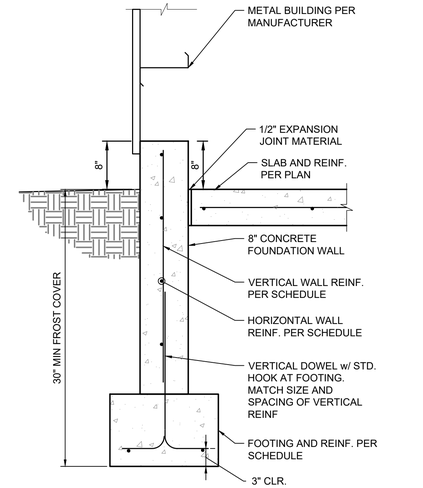

TYPICAL CONCRETE FOUNDATION WALL 4

SCALE: 1" = 1'-0"

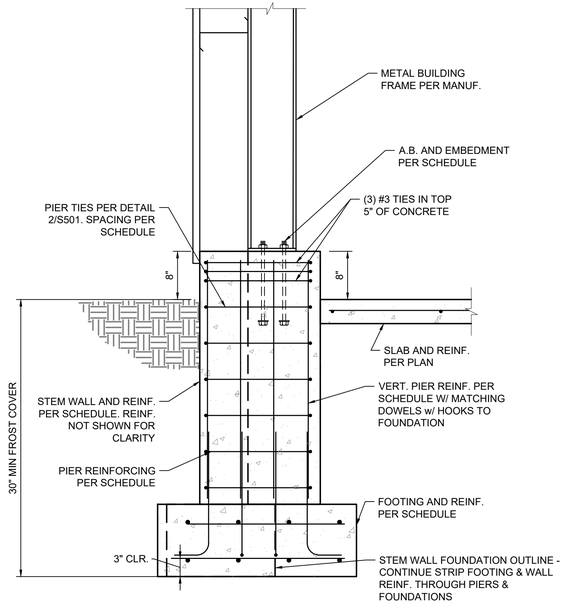

ENDWALL/CORNER COLUMN PIER - SECTION 5

SCALE: 1" = 1'-0"

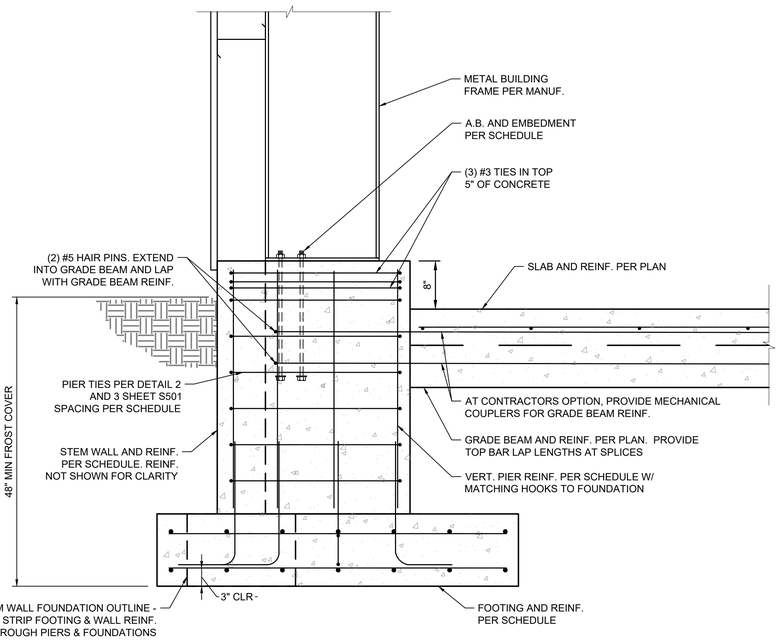

MAIN FRAME COLUMN PIER - SECTION 6

SCALE: 1" = 1'-0"

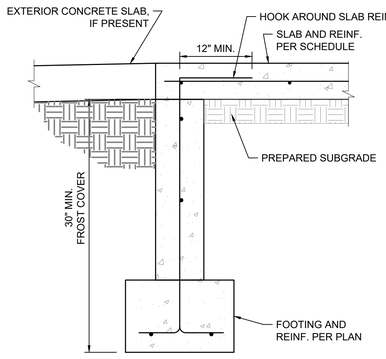

RECESSED FOUNDATION WALL AT OPENING 7

SCALE: 1" = 1'-0"

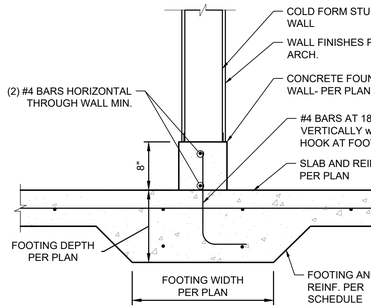

INTERIOR FOOTING AND STEM WALL 8

SCALE: 1" = 1'-0"

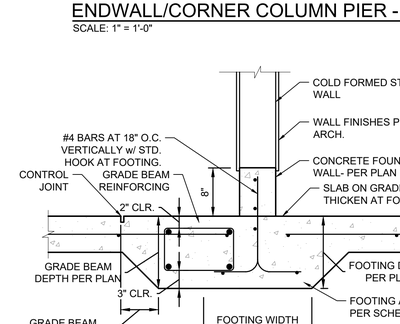

INTERIOR FOOTING AND GRADE BEAM 9

SCALE: 1" = 1'-0"

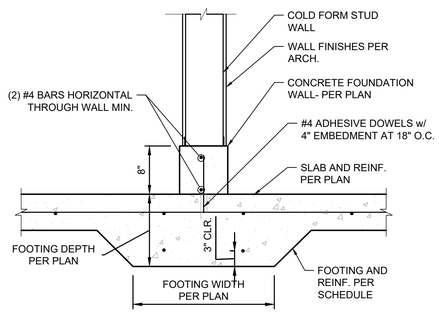

INTERIOR FOOTING AND STEM WALL 10

SCALE: 1" = 1'-0"

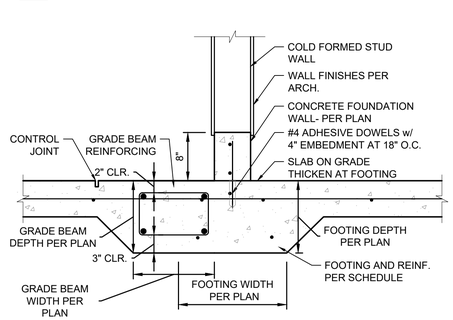

INTERIOR FOOTING AND GRADE BEAM 11

SCALE: 1" = 1'-0"

REVIEWED FOR CODE COMPLIANCE
Thomas W Peterson
12/14/2023
DIVISION OF FACILITIES CONSTRUCTION AND MANAGEMENT

DFCM CODE COMPLIANCE OFFICER

NO.	REVISIONS	BY	DATE
	PUBLISHED		
1	PLAN REVIEW	BM	11/16/23

This document or any part thereof in detail or design concept is the property of Forsgren Associates Inc. and shall not be copied without the written authorization of Forsgren Associates Inc.

DRAWN K. Osterlin
DESIGNED B. Maughan
APPROVED B. Maughan
QA C. Rasmussen

ATTENTION
LINE IS 2-INCHES
AT 24"x36" SIZE
IF NOT 2-INCHES, SCALE DRAWING ACCORDINGLY

No.7720989 BENJAMIN M. MAUGHAN 11/16/2023 STATE OF UTAH

LOGAN FISH HATCHERY
UTAH DIVISION OF WILDLIFE RESOURCES
1465 WEST 200 NORTH
LOGAN, UTAH 84321

UTAH DNR WILDLIFE RESOURCES

FORSGREN Associates Inc.
95 WEST 100 SOUTH, STE. 115, LOGAN, UT 84321
PH: 435.227.0333 FAX: 435.227.0334

Blue Stakes of UTAH 811 Bluestakes.org

WARM WATER AQUACULTURE BUILDING
LOGAN HATCHERY IMPROVEMENT PROJECT

STRUCTURAL DETAILS

PROJECT NO: 14-23-0005
SHEET NO: S500
DATE: 10-4-2023
PAGE NO: 32

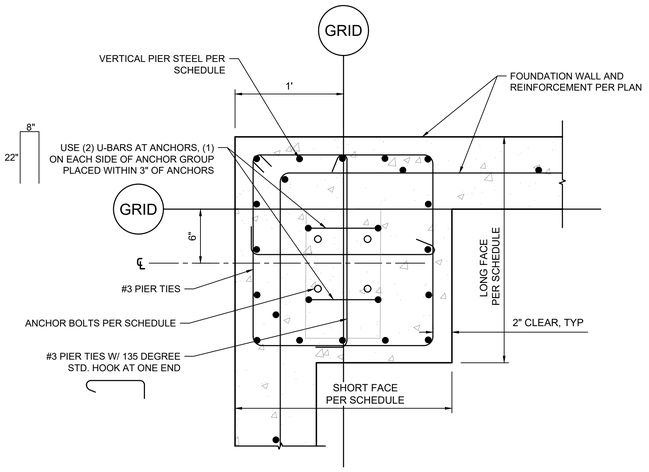

CORNER COLUMN PIER - PLAN 1

SCALE: 1-1/2" = 1'-0"

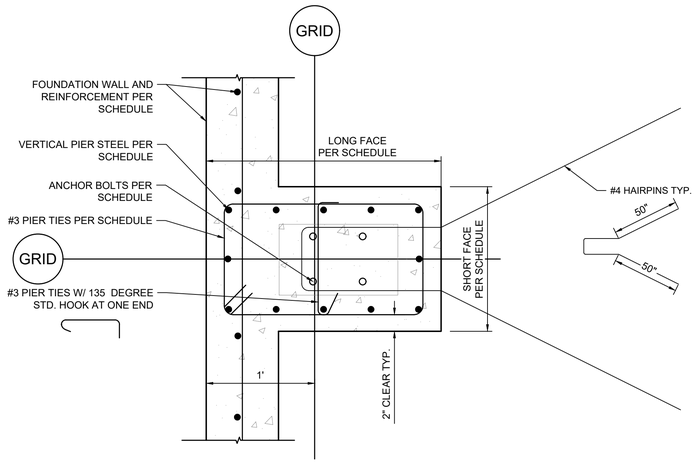

ENDWALL COLUMN PIER - PLAN 2

SCALE: 1-1/2" = 1'-0"

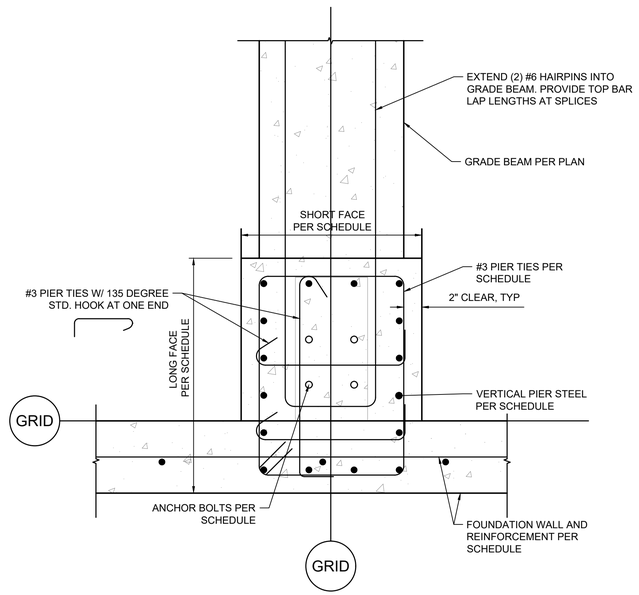

MAIN FRAME COLUMN PIER - PLAN 3

SCALE: 1-1/2" = 1'-0"

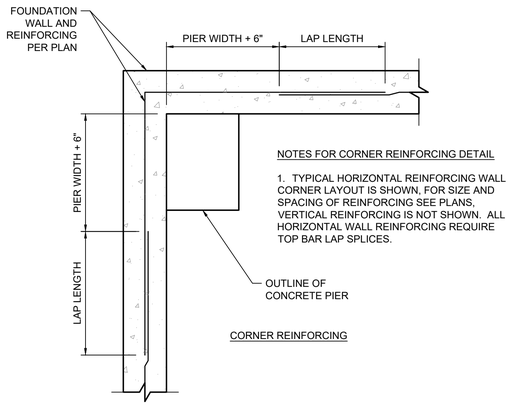

TYPICAL WALL REINFORCEMENT AT CORNER 4

SCALE: 1" = 1'-0"

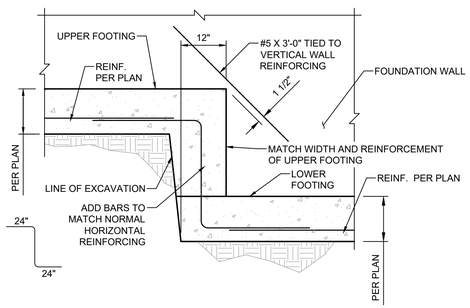

TYPICAL STEP AT FOOTING 5

SCALE: 3/4" = 1'-0"

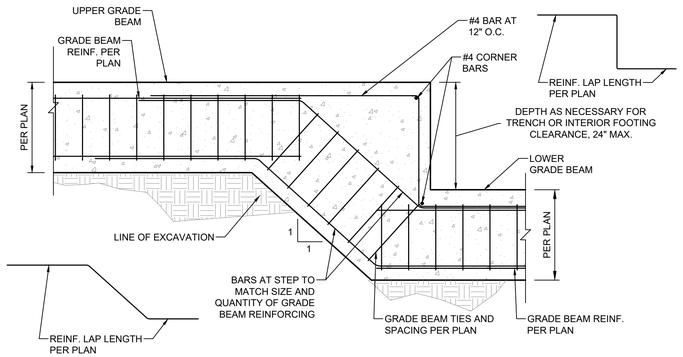

NOTE: SLAB REINFORCEMENT NOT SHOWN

GRADE BEAM DROP 6

SCALE: 3/4" = 1'-0"

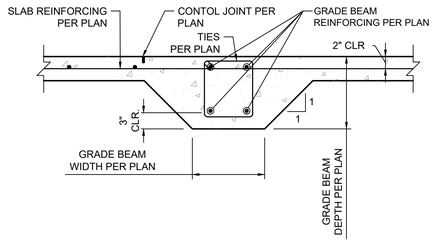

GRADE BEAM 7

SCALE: 1" = 1'-0"

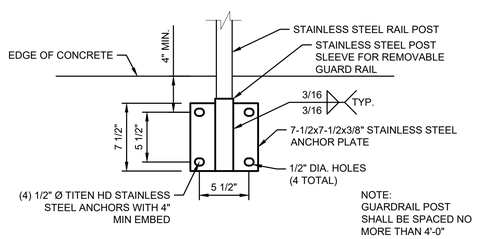

GUARD RAIL BASE ANCHORAGE 8

SCALE: 1-1/2" = 1'-0"

REVIEWED FOR CODE COMPLIANCE
Thomas W Peterson
12/14/2023
DIVISION OF FACILITIES CONSTRUCTION AND MANAGEMENT

DFCM CODE COMPLIANCE OFFICER

NO.	REVISIONS	BY	DATE
	PUBLISHED		
1	PLAN REVIEW	BM	11/16/23

This document or any part thereof in detail or design concept is the property of Forsgren Associates Inc. and shall not be copied without the written authorization of Forsgren Associates Inc.

DRAWN K. Osterlin
DESIGNED B. Maughan
APPROVED B. Maughan
QA C. Rasmussen

ATTENTION
LINE IS 2-INCHES
AT 24"x36" SIZE
IF NOT 2-INCHES, SCALE DRAWING ACCORDINGLY

PROFESSIONAL STRUCTURAL ENGINEER
No.7720989
BENJAMIN M. MAUGHAN
11/16/2023
STATE OF UTAH

LOGAN FISH HATCHERY
UTAH DIVISION OF WILDLIFE RESOURCES
1465 WEST 200 NORTH
LOGAN, UTAH 84321

UTAH DNR WILDLIFE RESOURCES

FORSGREN Associates Inc.
95 WEST 100 SOUTH, STE. 115, LOGAN, UT 84321
PH: 435.227.0333 FAX: 435.227.0334

Blue Stakes of UTAH 811 Bluestakes.org

WARM WATER AQUACULTURE BUILDING
LOGAN HATCHERY IMPROVEMENT PROJECT

STRUCTURAL DETAILS

PROJECT NO: 14-23-0005
SHEET NO: S501
DATE: 10-4-2023
PAGE NO: 33

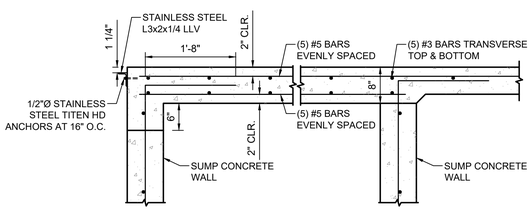

GRATING SUPPORT 1
SCALE: 3/4" = 1'-0"

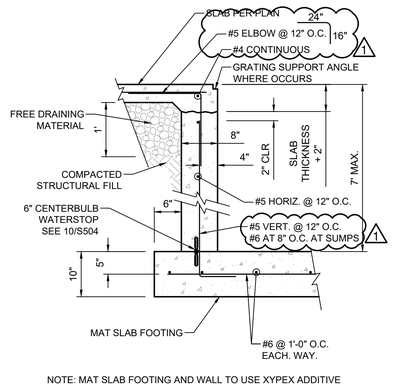

NOTE: MAT SLAB FOOTING AND WALL TO USE XYPEX ADDITIVE

PIT DETAIL 2
SCALE: 3/4" = 1'-0"

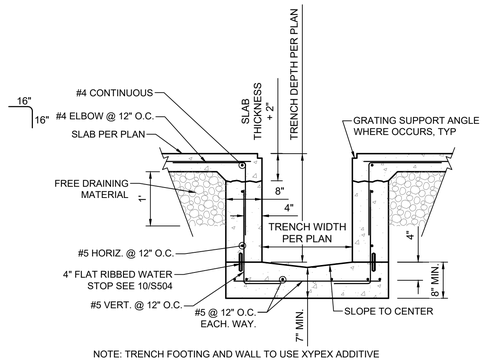

NOTE: TRENCH FOOTING AND WALL TO USE XYPEX ADDITIVE

TRENCH DETAIL 3
SCALE: 3/4" = 1'-0"

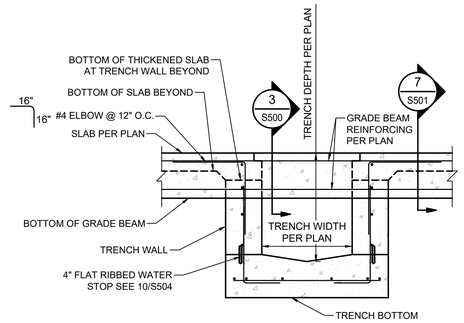

NOTE: TRENCH FOOTING AND WALL TO USE XYPEX ADDITIVE

GRADE BEAM AT TRENCH DETAIL 4
SCALE: 3/4" = 1'-0"

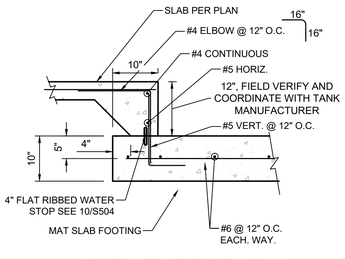

NOTE: SLAB FOOTING TO USE XYPEX ADDITIVE

SHALLOW PIT DETAIL 5
SCALE: 3/4" = 1'-0"

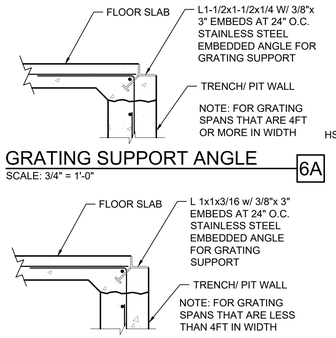

GRATING SUPPORT ANGLE 6A
SCALE: 3/4" = 1'-0"

GRATING SUPPORT ANGLE 6B
SCALE: 3/4" = 1'-0"

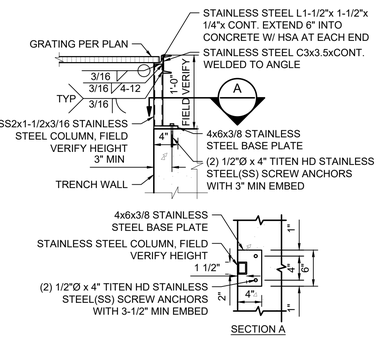

GRATING ANGLE W/ COLUMN 7
SCALE: 3/4" = 1'-0"

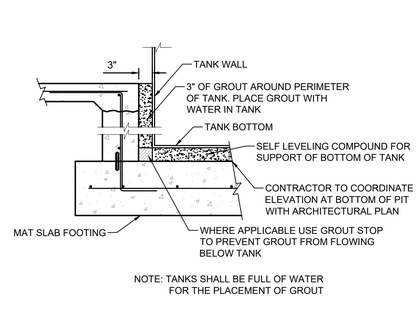

NOTE: TANKS SHALL BE FULL OF WATER FOR THE PLACEMENT OF GROUT

TANK GROUTING DETAIL 8
SCALE: 3/4" = 1'-0"

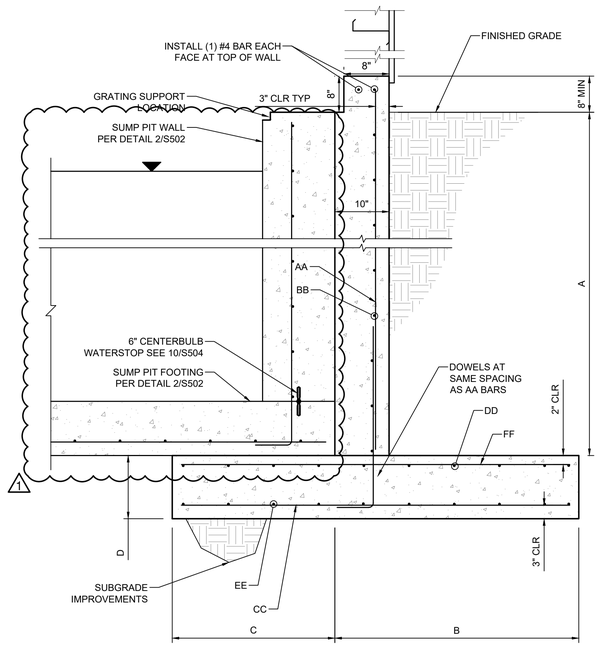

NOTES:

1. FINISHED GRADE SLOPE BEHIND THE WALL SHALL NOT EXCEED THE SLOPE SPECIFIED ON THESE DRAWINGS.
2. MAINTAIN 3" CLEAR FOR REINFORCEMENT WHERE CONCRETE IS CAST AGAINST EARTH.
3. DO NOT BACKFILL UNTIL SLAB HAS BEEN PLACED.
4. FOOTING DOWEL REINFORCEMENT TO MATCH SIZE AND SPACING OF THE WALL VERTICAL REINFORCEMENT.
5. PROVIDE SOIL SUBGRADE IMPROVEMENTS AS SUGGESTED PER GEOTECHNICAL REPORT.
6. FREE DRAINING MATERIAL SHALL EXTEND 12" FROM RETAINING WALL INTO RETAINED SOILS AND SHALL BE 3/4" WASHED ROCK. WRAP FREE DRAINING MATERIAL WITH MIRAFI 140N GEOTEXTILE FILTER FABRIC. EXTEND FREE DRAINING MATERIAL FROM FOOTING TO WITHIN 12" MIN OF GRADE ON THE RETAINED SIDE OF THE WALL.

RETAINING WALL SCHEDULE

MARK	DIMENSIONS				REINFORCEMENT						NOTES
					STEM		FOOTING				
	A	B	C	D	AA	BB	CC	DD	EE	FF	
RW1	2'-8" MAX	3'-6"	3'-0"	12"	#5 AT 10" O.C.	#5 AT 16" O.C.	#5 AT 10" O.C.	#5 AT 12" O.C.	#5 AT 12" O.C.	#5 AT 12" O.C.	- -

CORNER COLUMN PIER - PLAN 15
SCALE: 3/4" = 1'-0"

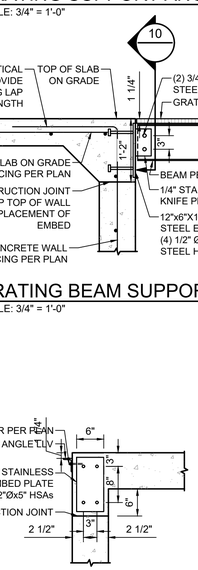

GRATING BEAM SUPPORT 9
SCALE: 3/4" = 1'-0"

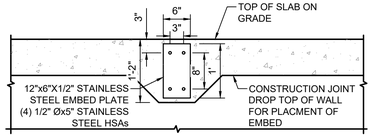

BEAM EMBED PLATE 10
SCALE: 3/4" = 1'-0"

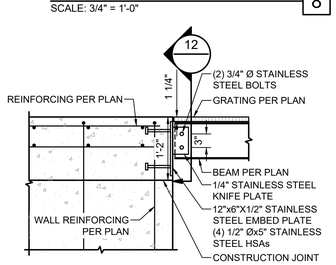

BEAM EMBED PLATE 11
SCALE: 3/4" = 1'-0"

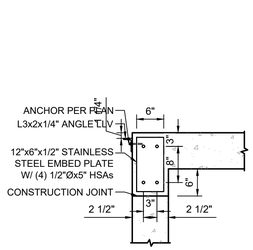

GRATING BEAM SUPPORT 12
SCALE: 3/4" = 1'-0"

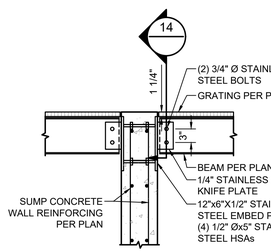

BEAM EMBED PLATE 13
SCALE: 3/4" = 1'-0"

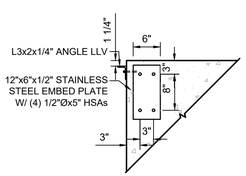

GRATING BEAM SUPPORT 14
SCALE: 3/4" = 1'-0"

REVIEWED FOR CODE COMPLIANCE
Thomas W Peterson
12/14/2023
DIVISION OF FACILITIES CONSTRUCTION AND MANAGEMENT

DFCM CODE COMPLIANCE OFFICER

NO.	REVISIONS	BY	DATE
	PUBLISHED		
1	PLAN REVIEW	BM	11/16/23

This document or any part thereof in detail or design concept is the property of Forsgren Associates Inc. and shall not be copied without the written authorization of Forsgren Associates Inc.

DRAWN K. Osterlin
DESIGNED B. Maughan
APPROVED B. Maughan
QA C. Rasmussen

ATTENTION
LINE IS 2-INCHES
AT 24"x36" SIZE
IF NOT 2-INCHES, SCALE DRAWING ACCORDINGLY

PROFESSIONAL STRUCTURAL ENGINEER
No.7720989
BENJAMIN M. MAUGHAN
11/16/2023
STATE OF UTAH

LOGAN FISH HATCHERY
UTAH DIVISION OF WILDLIFE RESOURCES
1465 WEST 200 NORTH
LOGAN, UTAH 84321

UTAH DNR WILDLIFE RESOURCES

FORSGREN Associates Inc.
95 WEST 100 SOUTH, STE. 115, LOGAN, UT 84321
PH: 435.227.0333 FAX: 435.227.0334

Blue Stakes of UTAH 811 Bluestakes.org

WARM WATER AQUACULTURE BUILDING
LOGAN HATCHERY IMPROVEMENT PROJECT

STRUCTURAL DETAILS

PROJECT NO: 14-23-0005
SHEET NO: S502
DATE: 10-4-2023
PAGE NO: 34

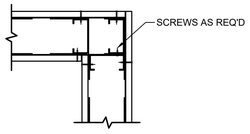

CORNER FRAMING

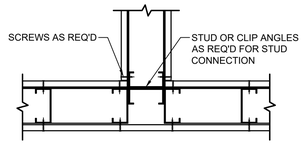

INTERSECTION FRAMING

TYPICAL INTERSECTIONS 1
SCALE: 3/4" = 1'-0"

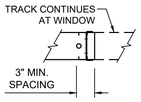

TOP VIEW

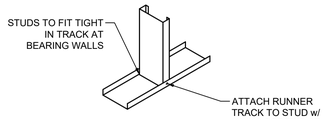

RUNNER TRACK STUD CONNECTION 2
SCALE: 3/4" = 1'-0"

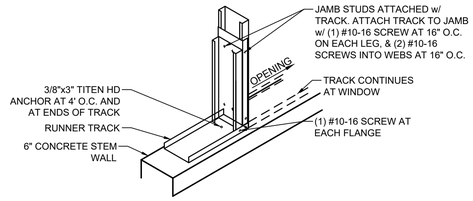

TYP. DOOR/ WINDOW JAMB DETAIL 3
SCALE: 3/4" = 1'-0"

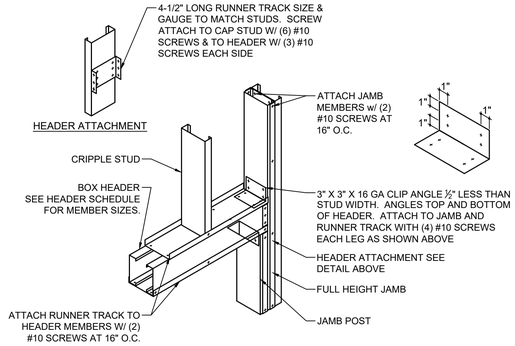

HEADER DETAIL 4
SCALE: 3/4" = 1'-0"

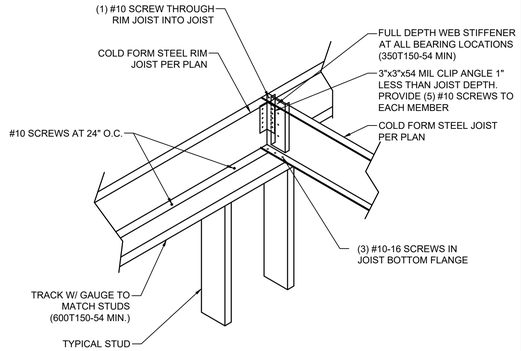

JOIST CONNECTION DETAIL 5
SCALE: 3/4" = 1'-0"

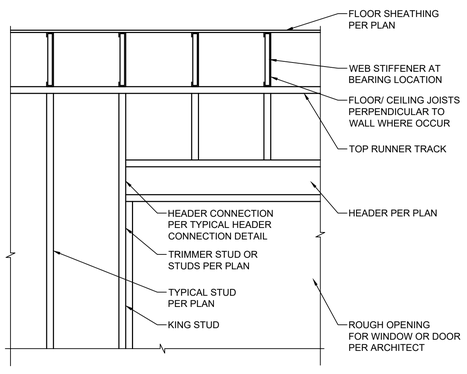

WALL HEADER DETAIL 6
SCALE: 3/4" = 1'-0"

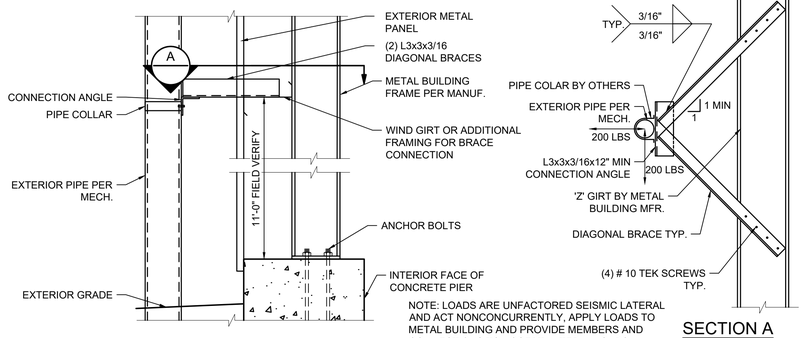

EXT. PIPE SUPPORT BRACING 7
SCALE: 3/4" = 1'-0"

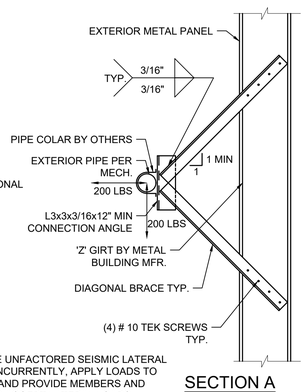

SECTION A

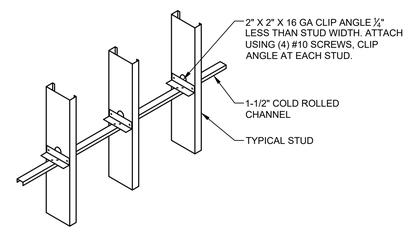

LATERAL BRACING 8
SCALE: 3/4" = 1'-0"

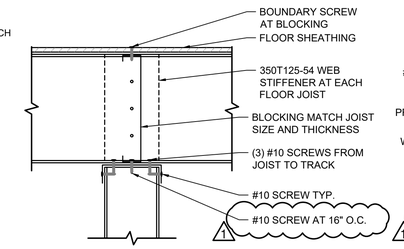

STIFFENER DETAIL 9
SCALE: 1-1/2" = 1'-0"

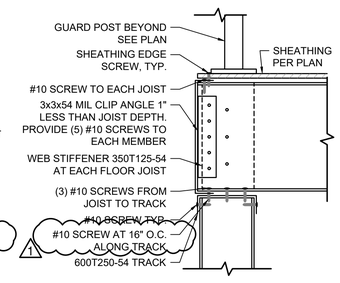

FRAMING DETAIL 10
SCALE: 1-1/2" = 1'-0"

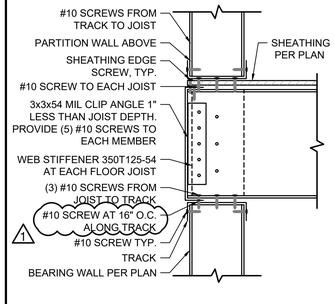

FRAMING DETAIL 11
SCALE: 1-1/2" = 1'-0"

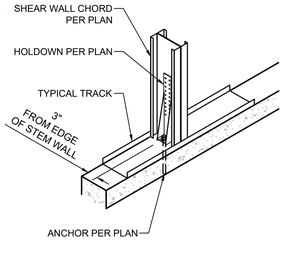

SHEAR WALL HOLDOWN 12
SCALE: 1-1/2" = 1'-0"

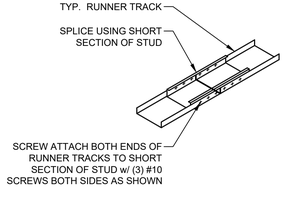

TYP TRACK SPLICE 13
SCALE: 1-1/2" = 1'-0"

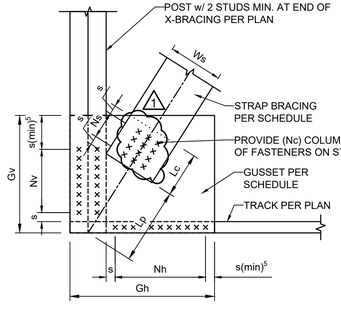

	X1	X2	X3	X4
Gh	14"	14"	12-1/2"	8-1/2"
Gv	9-1/2"	9"	10-1/2"	8-1/2"
Nv	10	9	11	7
Nh	13	13	11	7
Lp	3-1/2"	4"	3"	4-1/2"
Lc	5-1/2" MIN.	5-1/2" MIN.	5-1/2" MIN.	3-3/4" MIN.
Ws	3"	3"	3"	3"
Ns	6	6	6	5
S	3/4"	3/4"	3/4"	3/4"
Nc	3	3	3	2

NOTES:
1. ALL VALUES ARE PER SCHEDULE
2. Nv - # OF FASTENERS IN EACH COLUMN ON THE POST(S)
3. Nh - # OF FASTENERS IN EACH ROW ON THE TRACK(S)
4. Ns - # OF FASTENERS IN EACH COLUMN ON THE STRAP
5. EXCESS SPACING (S) IS TYPICAL ON EITHER POST(S) OR TRACK(S) & CAN BE SPACED FURTHER APART TO DISTRIBUTE THE FASTENERS
6. GUSSET THICKNESS TO MATCH METAL FRAMING THICKNESS
7. Nc - # OF COLUMNS OF FASTENERS ON THE STRAP

X-BRACING CORNER CONNECTION DETAIL 14
SCALE: 1-1/2" = 1'-0"

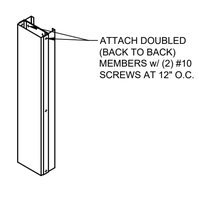

DOUBLE MEMBER 15
SCALE: 1-1/2" = 1'-0"

REVIEWED FOR CODE COMPLIANCE
Thomas W Peterson
12/14/2023
DIVISION OF FACILITIES CONSTRUCTION AND MANAGEMENT

DFCM CODE COMPLIANCE OFFICER

NO.	REVISIONS	BY	DATE
	PUBLISHED		
1	PLAN REVIEW	BM	11/16/23

This document or any part thereof in detail or design concept is the property of Forsgren Associates Inc. and shall not be copied without the written authorization of Forsgren Associates Inc.

DRAWN K. Osterlin
DESIGNED B. Maughan
APPROVED B. Maughan
QA C. Rasmussen

ATTENTION
LINE IS 2-INCHES
AT 24"x36" SIZE
IF NOT 2-INCHES, SCALE DRAWING ACCORDINGLY

REGISTERED PROFESSIONAL ENGINEER
No.7720989
BENJAMIN M. MAUGHAN
11/16/2023
STATE OF UTAH

LOGAN FISH HATCHERY
UTAH DIVISION OF WILDLIFE RESOURCES
1465 WEST 200 NORTH
LOGAN, UTAH 84321

UTAH DNR WILDLIFE RESOURCES

FORSGREN Associates Inc.
95 WEST 100 SOUTH, STE. 115, LOGAN, UT 84321
PH: 435.227.0333 FAX: 435.227.0334

Blue Stakes of UTAH 811 Bluestakes.org

WARM WATER AQUACULTURE BUILDING
LOGAN HATCHERY IMPROVEMENT PROJECT

STRUCTURAL DETAILS

PROJECT NO: 14-23-0005
SHEET NO: S503
DATE: 10-4-2023
PAGE NO: 35

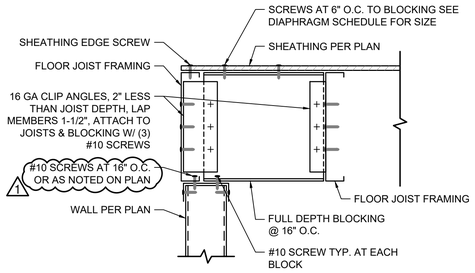

ROOF JOIST BLOCKING 1
SCALE: 3/4" = 1'-0"

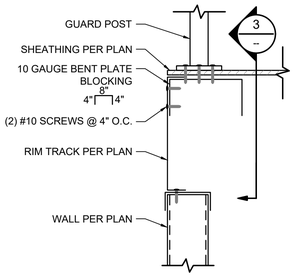

ROOF JOIST BLOCKING 2
SCALE: 3/4" = 1'-0"

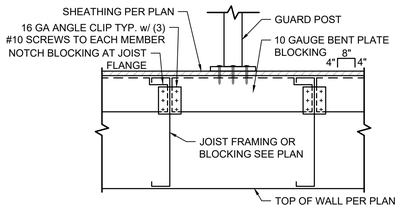

ROOF JOIST BLOCKING 3
SCALE: 3/4" = 1'-0"

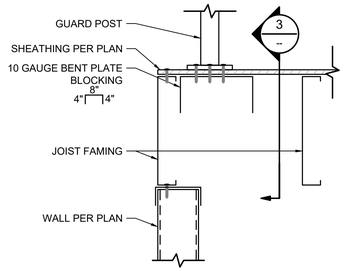

ROOF JOIST BLOCKING 4
SCALE: 3/4" = 1'-0"

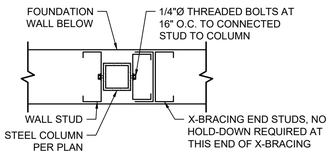

COLUMN/ WALL CONNECTION 5
SCALE: 3/4" = 1'-0"

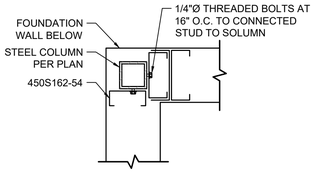

COLUMN/ WALL CONNECTION 6
SCALE: 3/4" = 1'-0"

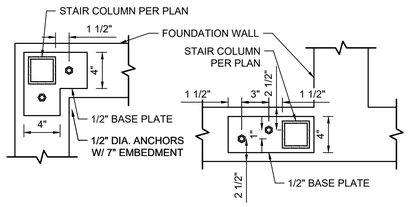

BASE PLATE 7
SCALE: 3/4" = 1'-0"

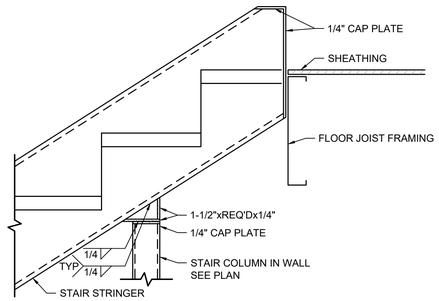

TOP OF STAIRS 8
SCALE: 3/4" = 1'-0"

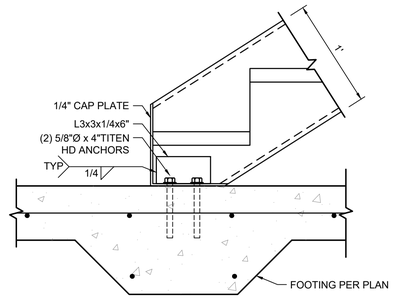

BASE OF STAIRS 9
SCALE: 3/4" = 1'-0"

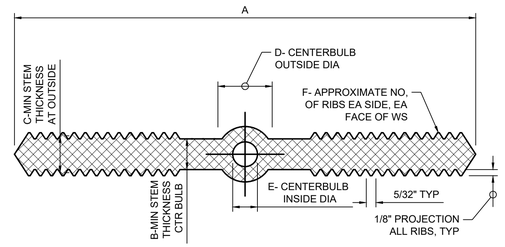

PVC WATERSTOP 10
SCALE: NTS

SIZE	SIZE	SIZE	SIZE	SIZE	SIZE	SIZE
4" FLATSTRAP	4"	3/16"	3/16"	---	---	4
4" CENTERBULB	4"	3/16"	3/16"	3/4"	1/4"	4
6" FLATSTRAP	6"	3/8"	3/8"	---	---	7
6" CENTERBULB	6"	3/8"	3/8"	7/8"	3/8"	7
9" FLATSTRAP	9"	3/8"	3/8"	---	---	7
9" CENTERBULB	9"	3/8"	3/8"	1"	1/2"	7

NOTES:
1. MATERIAL QUALITY PER SIKA OR APPROVED EQUAL.
2. DIMENSION REQUIREMENTS INDICATED SHOULD BE GIVEN TO SUPPLIERS PRIOR TO PLACING ORDERS.
3. NON-ROUND CENTER BULBS SHALL HAVE A MIN OUTSIDE DIM OF 'D'.

REVIEWED FOR CODE COMPLIANCE
Thomas W Peterson
12/14/2023
DIVISION OF FACILITIES CONSTRUCTION AND MANAGEMENT
DFCM CODE COMPLIANCE OFFICER

NO.	REVISIONS	BY	DATE
	PUBLISHED		
1	PLAN REVIEW	BM	11/16/23

This document or any part thereof in detail or design concept is the property of Forsgren Associates Inc. and shall not be copied without the written authorization of Forsgren Associates Inc.

DRAWN K. Osterlin
DESIGNED B. Maughan
APPROVED B. Maughan
QA C. Rasmussen

ATTENTION
LINE IS 2-INCHES
AT 24"x36" SIZE
IF NOT 2-INCHES, SCALE DRAWING ACCORDINGLY

No.7720989 BENJAMIN M. MAUGHAN 11/16/2023 STATE OF UTAH
REGISTERED STRUCTURAL ENGINEER

LOGAN FISH HATCHERY
UTAH DIVISION OF WILDLIFE RESOURCES
1465 WEST 200 NORTH
LOGAN, UTAH 84321

UTAH DNR WILDLIFE RESOURCES

FORSGREN Associates Inc.
95 WEST 100 SOUTH, STE. 115, LOGAN, UT 84321
PH: 435.227.0333 FAX: 435.227.0334

Blue Stakes of UTAH 811 Bluestakes.org

WARM WATER AQUACULTURE BUILDING
LOGAN HATCHERY IMPROVEMENT PROJECT

STRUCTURAL DETAILS

PROJECT NO: 14-23-0005
SHEET NO: S504
DATE: 10-4-2023
PAGE NO: 36

LEGEND OF MECHANICAL SYMBOLS AND ABBREVIATIONS

DUCTWORK/GRILLES

- POSITIVE PRESSURE DUCT - RISE
- POSITIVE PRESSURE DUCT - DROP
- NEGATIVE PRESSURE DUCT - RISE
- NEGATIVE PRESSURE DUCT - DROP
- ROUND DUCT - RISE
- ROUND DUCT - DROP
- TURNING VANES
- FRESH AIR LOUVER
- RELIEF AIR OR EXHAUST AIR LOUVER
- 22X22 200 — CEILING RETURN REGISTER
- 12X12 200 — CEILING EXHAUST REGISTER, (BALANCE TO MATCH SUPPLY IF RETURN CFM IS NOT SHOWN)
- 24X10 200 — SIDEWALL SUPPLY REGISTER
- 24X10 200 — SIDEWALL EXHAUST OR RETURN REGISTER

  TOP FIGURES INDICATE NECK SIZE. BOTTOM FIGURE INDICATES CFM.
- 12/8 — RECTANGULAR DUCT WITH FREE AREA DIMENSIONS SHOWN IN INCHES.
- 12ø — ROUND DUCT WITH FREE AREA DIMENSIONS SHOWN IN INCHES.
- UP — INCLINED RISE
- DN — INCLINED DROP

  WITH RESPECT TO AIR FLOW 15° NOMINAL INCLINE WITH RADIUS TURNS=DEPTH OF DUCT.
- W R — R/W=1. ROUND DUCT SIMILAR TO RECTANGULAR
- 12/12 8/8 — RECTANGULAR TO RECTANGULAR OR ROUND TO ROUND DUCT TRANSFORMATION MAXIMUM 15° INCLUDED ANGLE EXCEPT WHERE SHOWN OTHERWISE.
- 12/12 12ø — RECTANGULAR TO ROUND DUCT TRANSFORMATION
- 12Ø 12/12 — HIGH EFFICIENCY FITTING
- MANUAL VOLUME DAMPER
- BDD — BACK DRAFT DAMPER
- ATC OR — ATC DAMPER
- AD — ACCESS PANEL IN DUCT OR PLENUM
- 4-WAY BLOW PATTERN

PIPING

- OR — SHUT OFF VALVE
- OR — BALL VALVE
- OR — BUTTERFLY VALVE
- OR — GATE VALVE
- GATE VALVE - NON RISING STEM
- OR — ANGLE VALVE
- OR — CHECK VALVE
- OR — LATERAL STRAINER WITH BLOW-OFF VALVE, PROVIDE HOSE END WITH CAP WHERE DISCHARGE IS NOT PIPED TO DRAIN
- RPBP — REDUCED PRESSURE BACKFLOW PREVENTOR W/ DRAIN PAN
- OR — PRESSURE REDUCING VALVE SELF CONTAINED
- OR — RELIEF VALVE
- OR — TEMPERATURE AND PRESSURE TEST PORT
- THERMOMETER WELL
- THERMOMETER - TEMP RANGE AS INDICATED
- PRESSURE GAUGE WITH SHUT OFF PLUG VALVE
- PRESSURE GAUGE WITH PIGTAIL
- OR — UNION
- OR — FLANGE
- OR — FLEXIBLE EXPANSION JOINT
- REDUCER
- ECCENTRIC REDUCER
- BRANCH - BOTTOM CONNECTION
- BRANCH - TOP CONNECTION
- BRANCH - SIDE CONNECTION
- RISE OR DROP
- RISER - DOWN (ELBOW)
- RISER - UP (ELBOW)
- PIPE CAP
- ARROW INDICATES DIRECTION OF FLOW IN PIPE
- DN — LEADER INDICATES DOWNWORD SLOPE
- VALVE IN RISE
- OR — 90° ELBOW
- 45° ELBOW

PLUMBING

- THERMOSTATIC MIXING VALVE
- HOSE BIBB
- FLOOR SINK
- FLOOR DRAIN
- FCO COTG — FLOOR CLEAN-OUT OR CLEAN-OUT TO GRADE
- VTR — VENT THRU ROOF
- CLEAN-OUT
- FILL PORT
- DRAIN PAN AND P-TRAP

EQUIPMENT

- UNIT HEATER

ANNOTATIONS

- P-1 — PLUMBING FIXTURES
- POINT OF CONNECTION
- A / M101 — DETAIL TAG - TOP FIGURE IS DETAIL NO. BOTTOM FIGURE IS SHEET NO.
- EF 1 — EQUIPMENT IDENTIFICATION
- 1 — KEYED NOTE IDENTIFICATION
- RH — HUMIDITY SENSOR
- T — THERMOSTAT

LINETYPES

- BBD — BOILER BLOW DOWN
- BF — BOILER FEED WATER
- B — BRINE
- DOMESTIC COLD WATER (DCW)
- DOMESTIC HOT WATER (DHW)
- DOMESTIC HOT WATER RETURN (DHWR)
- G — NATURAL GAS
- RL — REFRIGERANT LIQUID
- RS — REFRIGERANT SUCTION
- SEWER (BELOW GRADE)
- SEWER (ABOVE GRADE)
- VENT (SEWER)

MECHANICAL GENERAL NOTES

1. PROVIDE RG-1 TYPE GRILLE, AS SCHEDULED, FOR ALL CEILING RETURN GRILLES SHOWN AS SUCH. PROVIDE SIZE 22x22, OR 22x10 WITH SOUND BOOT FOR UNDUCTED GRILLES. SEE DETAIL 4/ME501.
2. COORDINATE EXACT LOCATION OF DUCTS WITH STRUCTURAL MEMBERS, LIGHTS, REFLECTED CEILING, CABLE TRAY, PLUMBING, MECHANICAL PIPING, ETC.
3. BRANCH DUCTWORK SHALL BE SIZED TO MATCH THE NECK SIZE OF THE DIFFUSER, REGISTER OR GRILLE IT SERVES UNLESS NOTED OTHERWISE.
4. THE MECHANICAL CONTRACTOR SHALL BE RESPONSIBLE FOR CAULKING AND SEALING ALL PENETRATIONS IN FIRE AND SMOKE RATED PARTITIONS TO MAINTAIN RATINGS. SEE SPECIFICATION. TYPICAL.
5. INSTALL TURNING VANES IN ALL SQUARE AND RECTANGULAR LOW PRESSURE DUCTWORK.
6. CONTRACTOR SHALL OFF-SET, TRANSITION AND PROVIDE CHANGES AS REQUIRED FOR COORDINATION WITH OTHER TRADES, TYPICAL.
7. DUCTWORK SIZES SHOWN ARE INSIDE CLEAR DIMENSIONS. REFER TO MECHANICAL SPECIFICATIONS FOR EXTENT OF DUCT INSULATION AND LINER.
8. PROVIDE AND INSTALL REMOTE DAMPER OPERATORS FOR ALL DAMPERS INSTALLED ABOVE INACCESSIBLE CEILINGS, SEE MECHANICAL SPECIFICATIONS FOR EQUIPMENT REQUIREMENTS. TYPICAL.
9. PROVIDE AND INSTALL HIGH EFFICIENC TAKE-OFF FITTINGS AND BALANCING DAMPER AT ALL BRANCH CONNECTIONS TO LOW PRESSURE DUCTWORK.
10. WHERE DUCTWORK CROSSES, SUPPLY DUCTWORK IS USUALLY BELOW RETURN AND EXHAUST DUCT. RETURN DUCTWORK IS USUALLY BELOW EXHAUST DUCTS.
11. AT LOCATIONS WHERE DIFFUSERS OR GRILLES ARE UNDER DUCTWORK, CONTRACTOR TO FABRICATE TRANSISTION BOOT FROM FLEX CONNECTION TO DIFFUSER OR GRILLE WITH BALANCING DAMPER, TYPICAL.
12. MECHANICAL CONTRACTOR SHALL ENSURE THAT ALL EQUIPMENT IS PROVIDED AND INSTALLED WITH CLEARANCES PER MANUFACTURERS RECOMMNEDATIONS. THE CONTRACTOR SHALL MAINTAIN PROPER SERVICE SPACE FOR COIL PULLS, BAS DEVICES, MAINTENANCE ACCESS, ETC.
13. ALL PIPE AND DUCT SIZES SHALL REMAIN THE SAME SIZE SHOWN, THE THE DIRECTION OF FLOW, UNTIL SHOWN OTHERWISE.
14. ALL DUCTWORK ABOVE HARD CEILINGS SHALL BE EXTENDED ALL THE WAY TO THE SUPPLY DIFFUSERS, RETURN GRILLES, OR EXHAUST GRILLES WHETER OR NOT HARD DUCT OR FLEX DUCT IS SHOWN ON PLANS. FLEX DUCT WILL NOT BE ALLOWED TO DIFFUSERS OR GRILLES ABOVE HARD CEILINGS. FLEX DUCT WILL BE REQUIRED IN AREAS ABOVE T-BAR CEILINGS.
15. DUCTWORK, PIPING, AND EQUIPMENT SHALL BE COORDINATED WITH STRUCTURE, LIGHTS, REFLECTED CEILING PLANS, CABLE TRAY, ELECTRICAL CONDUIT, PLUMBING, MECHANICAL, AND FIRE PROTECTION PIPING, ALL OTHER TRADES, AND ALL OTHER EXISTING CONDITIONS.
16. THE CONTRACTOR SHALL INFORM THE DESIGNER OF ANY PROPOSED DEVIATIONS FROM THE CONTRACT DOCUMENTS.
17. PROVIDE ACCESS TO ALL TEMPERATURE CONTROLS ABOVE CEILINGS. LOCATE IN ACCESSIBLE LOCATION. WHERE THERE ARE HARD CEILINGS THE CONTRACTOR SHALL PROVIDE 24"X24" ACCESS DOOR.
18. CONTRACTOR TO PROVIDE AND INSTALL ALL CONTROL WIRING FOR STAND ALONE CONTROLS FOR ALL EQUIPMENT. INCLUDING: SPLIT SYSTEMS, EXHAUST FANS, UNIT HEATERS, FURNACE, CONDENSING UNIT, ETC.

PLUMBING GENERAL NOTES

1. SLOPE PIPING AS FOLLOWS, UNLESS OTHERWISE NOTED. WASTE: BRANCHES 1/4" PER FOOT. WASTE MAINS: 1/8" PER FOOT.
2. SLEEVE PIPING THRU WALLS/FOUNDATIONS WHERE REQUIRED.
3. PLUMBING DRAWINGS ARE SCHEMATIC IN NATURE. FIELD VERIFY EXACT ROUTING AND COORDINATE WITH ALL OTHER TRADES.
4. ALL PIPING IN PLUMBING CHASES TO BE ARRANGED TO ALLOW MAINTENANCE ACCESS.
5. NO PIPING TO RUN OVER ELECTRICAL PANELS, VFD'S, OR MCC'S.
6. COORDINATE FAN ROOM FLOOR DRAIN LOCATIONS AND COOLING COILS.
7. NO FIRE PROTECTION LINE IS TO BE DESIGNED OR INSTALLED PRIOR TO CLOSE COORDINATION WITH ALL OTHER DISCIPLINES. DUCTWORK, MECHANICAL PIPING, AND PLUMBING TAKE PRECEDENCE OVER FIRE PROTECTION PIPING. FAILURE TO COMPLY WILL RESULT IN FIRE PROTECTION REMOVAL AND REINSTALLATION AT THE CONTRACTOR'S EXPENSE.
8. SLEEVE/CONFIGURE CMU WALLS FOR EMBEDDED PIPING AND PIPE PENETRATIONS AS REQUIRED.
9. REFER TO ARCHITECTURAL DRAWINGS FOR FIXTURE MOUNTING HEIGHTS, DIMENSIONS, AND OTHER REQUIREMENTS.
10. CONTRACTOR TO VERIFY CONNECTION SIDE OF ADA FIXTURES AND ADJUST ACCORDINGLY.
11. LOCATE ALL VENTS MINIMUM 25 FT AWAY FROM AIR INTAKES.
12. INSTALL DOMESTIC WATER LINES BELOW DUCTWORK.
13. INSTALL A 24"x24" ACCESS DOOR BELOW ALL ISOLATION VALVES AND CIRCUIT SETTERS WHERE MOUNTED ABOVE HARD CEILINGS.
14. MOUNT ALL CEILING TYPE ISOLATION VALVES, CONTROL VALVES, CIRCUIT SETTERS, ETC. NEAR CEILING FOR ACCESSIBILITY.
15. DETAILS REFERENCE ALL SHEETS.
16. EXISTING PIPING SHOWN HAS BEEN TAKEN FROM INFORMATION PROVIDED BY OTHERS. FIELD VERIFY ALL SYSTEMS, SIZES, LOCATIONS, AND ELEVATIONS PRIOR TO STARTING ANY NEW WORK.

REVIEWED FOR CODE COMPLIANCE
Thomas W Peterson
12/14/2023
DIVISION OF FACILITIES CONSTRUCTION AND MANAGEMENT

DFCM CODE COMPLIANCE OFFICER

NO.	REVISIONS	BY DATE
	PUBLISHED	

This document or any part therof in detail or design concept is the property of Forsgren Associates Inc. and shall not be copied without the written authroization of Forsgren Associates Inc.

DRAWN Author
DESIGNED Designer
APPROVED Checker
QA

ATTENTION
LINE IS 2-INCHES
AT 24"x36" SIZE
IF NOT 2-INCHES, SCALE DRAWINGS ACCORDINGLY

PROFESSIONAL ENGINEER JEDEDIAH JENKINS 8388845 STATE OF UTAH

LOGAN FISH HATCHERY
UTAH DIVISION OF WILDLIFE RESOURCES
1465 WEST 200 NORTH
LOGAN, UTAH 84321

UTAH DNR WILDLIFE RESOURCES

FORSGREN Associates Inc.
9 5 WEST 1 0 0 SOUTH , STE . 1 1 5 , LOGAN , UT 8 4 3 2 1
PH: 435.227.0333 FAX: 435.227.0334

design west | architects
255 SOUTH 300 WEST
LOGAN, UT 84321

LOGAN FISH HATCHRY - WWAB

Mechanical Symbols Legend and General Notes

PROJECT NO: 822249
SHEET NO: M001
DATE: 10-04-23
PAGE NO: 37

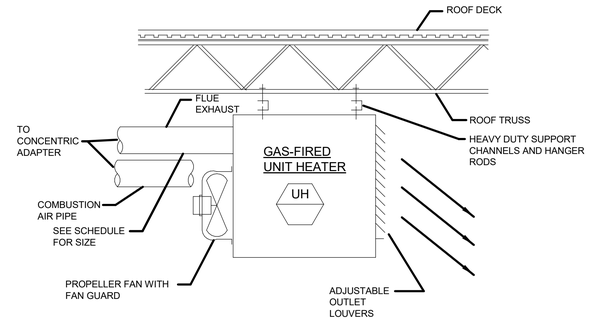

NOTE: ELECTRIC UNITE MOUNTING SIMILAR

5 / M501 GAS FIRED UNIT HEATER DETAIL

NO SCALE

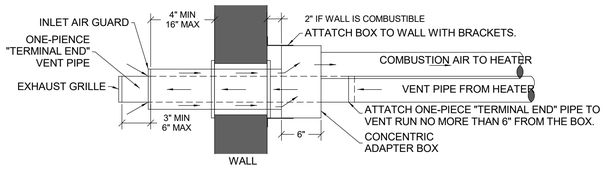

4 / M501 SIDEWALL FLUE DETAIL

NO SCALE

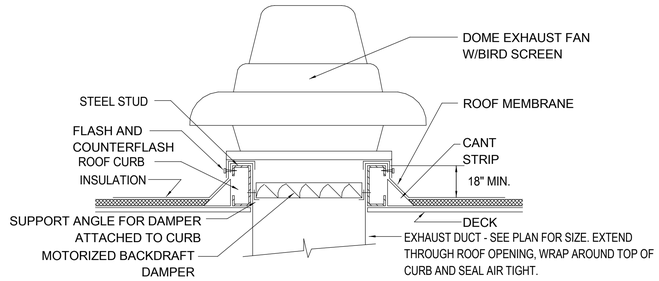

3 / M501 EXHAUST FAN DETAIL

NO SCALE

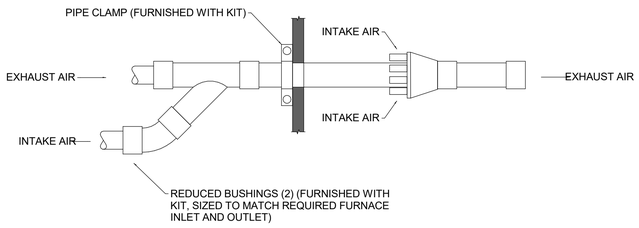

2 / M501 CONCENTRIC WALL TERMINATION

NO SCALE

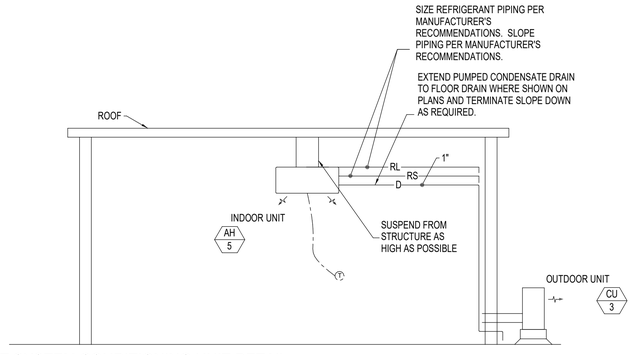

1 / M501 SPLIT SYSTEM CONDITIONING UNIT DETAIL

NO SCALE

REVIEWED FOR CODE COMPLIANCE
Thomas W Peterson
12/14/2023
DIVISION OF FACILITIES CONSTRUCTION AND MANAGEMENT

DFCM CODE COMPLIANCE OFFICER

PUBLISHED		
NO.	REVISIONS	BY DATE

This document or any part therof in detail or design concept is the property of Forsgren Associates Inc. and shall not be copied without the written authroization of Forsgren Associates Inc.

DRAWN Author
DESIGNED Designer
APPROVED Checker
QA

ATTENTION
LINE IS 2-INCHES
AT 24"x36" SIZE
IF NOT 2-INCHES, SCALE DRAWINGS ACCORDINGLY

PROFESSIONAL ENGINEER JEDEDIAH JENKINS 8388845 STATE OF UTAH

LOGAN FISH HATCHERY
UTAH DIVISION OF WILDLIFE RESOURCES
1465 WEST 200 NORTH
LOGAN, UTAH 84321

UTAH DNR WILDLIFE RESOURCES

FORSGREN Associates Inc.
9 5 WEST 1 0 0 SOUTH , STE . 1 1 5 , LOGAN , UT 8 4 3 2 1
PH: 435.227.0333 FAX: 435.227.0334

design west | architects
255 SOUTH 300 WEST
LOGAN, UT 84321

LOGAN FISH HATCHRY - WWAB

MECHANICAL DETAILS

PROJECT NO: 822249
SHEET NO: ME501
DATE: 10-04-23

GRILLES, REGISTERS AND DIFFUSERS

ID	MANUFACTURER	MODEL	DESCRIPTION	
RG-1	EH PRICE	PDDR	FACE STYLE: PERFORATED RETURN AIR UNIT FACE SIZE: 24" x 24", 24" x 12" OR 12" x 12" AS REQUIRED TO FIT CEILING TILE SPACE AVAILABLE. APPLICATION: AIR RETURN MATERIAL: STEEL FINISH: B12 WHITE POWDERCOAT	MOUNTING-FRAME: SURFACE OR LAY-IN, (C/W CEILING TYPE.) DAMPER: NONE MAX NC - 30 REMOVABLE FACE & CORE
SWS-1	EH PRICE	520S	FACE STYLE: DOUBLE DEFLECTION HIGH SIDEWALL SUPPLY REGISTER APPLICATION: CONSTANT VOLUME BLADE ORIENTATION: VERTICAL FRONT WITH REAR HORZONTAL ADJUSTABLE VANES, FRONT BLADES PARALLEL TO SHORT DIMENSION. MATERIAL: STEEL	FINISH: B12 WHITE POWDERCOAT FRAME: 1.25" BORDER MOUNTING: SURFACE PATTERN: ADJUSTIBLE DAMPER: OPPOSED BLADE MAX NC - 30 CORE: REMOVABLE
SWR-1 SWE-1	EH PRICE	535 S	FACE STYLE: SIDE WALL RETURN AIR GRILLE ARRANGEMENT: STATIONARY HORIZONTAL BLADE ORIENTATION: 45 DEG DEFLECTION VANES SPACED AT 1/2 INCH CENTERS. FRONT BLADES PARALLEL TO SHORT DIMENSION. MATERIAL: STEEL FINISH: B12 WHITE POWDERCOAT	FRAME: 1.25 INCH FLAT / BORDER MOUNTING: SURFACE PATTERN: PERMANENT 45 DEGREE DEFLECTION DAMPER: OPPOSED BLADE MAX NC - 30

LOUVER SCHEDULE

ID	MANUFACTURER	MODEL	MAX NC	DESCRIPTION
L-1	AIROLITE	K6776	SEE PLANS	WALL LOUVER , STATIONARY 6 INCH THICK 35 BLADE, 12 GA., EXT. ALUMINUM BLADES, 8 GA, EXT. ALUMINUM JAMBS. CHANNEL FRAME. BUG SCREEN. COLOR AND FINISH TO BE SELECTED BY ARCHITECT.

ELECTRIC WALL HEATER SCHEDULE

SYMBOL	MANUF. AND MODEL NO.	BTUH	WATTS	ELECTRICAL V/PH	ELECTRICAL AMPS	REMARKS
EWH-1	QMARK CWH1101DSAF	3,413	1000	120/1	8.4	(1)(2)(3)

(1) PROVIDE WITH MODEL CWHSMAG SURFACE MOUNTING FRAME.
(2) COMPLETE WITH DOUBLE-POLE, SINGLE THROW ON/OFF SWITCH ON BACK TO ACT AS DISCONNECT.
(3) COMPLETE WITH AN INTEGRAL THERMOSTAT

FAN SCHEDULE

ID	MANUFACTURER AND MODEL NUMBER	LOCATION	TYPE	AIR TYPE	AIR: MAXIMUM AIRFLOW RATE (CFM)	AIR: STATIC PRESSURE (IN. WATER)	FAN: OUTLET VELOCITY (FPM)	FAN: FAN SPEED (RPM)	FAN: STATIC EFFICIENCY (%)	ELECTRICAL: MOTOR SIZE (HP)	ELECTRICAL: MOTOR BHP (HP)	ELECTRICAL: MOTOR SPEED (RPM)	ELECTRICAL: VOLT/PH/HZ	PHYSICAL: WEIGHT (LB)	CONTROL	NOTES
EF-1	GREENHECK G-120-VG	CULTURE TANK ROOM 01 101	(2)	EXH	900	0.35	986	1,038	62%	1/4	0.09	1200	115/1/60	43	B	(1)(2)
EF-2	GREENHECK GB-180	EQUIPMENT ROOM 01 102	(2)	EXH	2170	0.35	1048	740	62%	1/3	0.27	1461	115/1/60	87	B	(1)(2)
EF-3	GREENHECK G-120-VG	CULTURE TANK ROOM 02 103	(2)	EXH	900	0.35	968	1,038	62%	1/4	0.09	1200	115/1/60	43	B	(1)(2)
EF-4	GREENHECK G-097-VG	FEED STORAGE 104	(2)	EXH	100	0.35	104	1,042	26%	1/4	0.02	1725	115/1/60	38	B	(1)(2)
EF-5	GREENHECK GB-097	FORMALIN H202 STORAGE 107	(2)	EXH	100	0.45	104	1,153	26%	1/6	0.05	1711	115/1/60	55	C	(1)(2)
EF-6	GREENHECK G-090-VG	INCUBATION ROOM 111	(2)	EXH	320	0.35	457	1,303	48%	1/10	0.04	1725	115/1/60	29	B	(1)(2)
EF-7	GREENHECK G-095-VG	EQUIPMENT ROOM 01 120	(2)	EXH	680	0.35	586	1,522	42%	1/6	0.09	1725	115/1/60	29	B	(1)(2)
EF-8	GREENHECK G-097-VG	CLAY STORAGE 115	(2)	EXH	100	0.40	104	1,099	26%	1/4	0.02	1725	115/1/60	38	C	(1)(2)
EF-9	GREENHECK G-099-A	CULTURE TANK ROOM 116	(2)	EXH	1,115	0.35	1,161	1,725	36%	1/4	0.21	1725	115/60/1	49	B	(1)(2)
EF-10	GREENHECK G-097-VG	WET LAB 112	(2)	EXH	100	0.40	104	1,099	26%	1/4	0.02	1725	115/1/60	38	C	(1)(2)
CF-1	AIRMASTER LC30WC	SEE PLANS	(3)	CIRC	6,000	--	305	1,100	--	1/4	--	1100	115/60/1	37	A	(3)

1. ALL CAPACITIES AT 4800 FT. ELEVATION.
2. ROOF MOUNTED EXHAUST FAN, COMPLETE WITH 18" PRE-FAB ROOF CURB, MOTORIZED BACKDRAFT DAMPER, BIRD SCREEN, INTEGRAL THERMAL OVERLOAD PROTECTION, DISCONNECT.
3. WALL MOUNTED CIRCULATION FAN.

A. CONTROL: ON/OFF SWITCH BY ELEC
B. CONTROL: THERMOSTAT / RH SENSOR
C. CONTROL: CONTINUOUS

SPLIT SYSTEM

ID	MANUFACTURER	LOCATION	COOLING CAPACITY (BTU/H)	HEATING CAPACITY (BTU/H)	INDOOR UNIT: MODEL	INDOOR UNIT: CFM RANGE	INDOOR UNIT: DIMENSIONS L/D/H (IN)	OUTDOOR UNIT: MODEL	OUTDOOR UNIT: DIMENSIONS L/D/H (IN)	OUTDOOR UNIT: WEIGHT (LBS.)	OUTDOOR UNIT: MOCP	OUTDOOR UNIT: VOLTS/PH/HZ.	NOTES
CU/AC-1	LG	MCC ROOM 112	3,000-34,000	3,000-38,000	LSN363HLV	530-848	47/11/14	LSU363HLV	38/13/33	150	30	208/1/60	(1-7)
CU/AC-2	LG	BLDG ELECTRICAL 113	3,000-34,000	3,000-38,000	LSN363HLV	530-848	47/11/14	LSU363HLV	38/13/33	150	30	208/1/60	(1-7)
CU/AC-3	LG	FEED STORAGE 104	3,000-34,000	3,000-38,000	LSN363HLV	530-848	47/11/14	LSU363HLV	38/13/33	150	30	208/1/60	(1-7)
CU/AC-4	LG	CLAY STORAGE 115	3,000-34,000	3,000-38,000	LSN363HLV	530-848	47/11/14	LSU363HLV	38/13/33	150	30	208/1/60	
CU/AC-5	LG	CLAY STORAGE 115	3,000-34,000	3,000-38,000	LSN363HLV	530-848	47/11/14	LSU363HLV	38/13/33	150	30	208/1/60	

1. CAPACITIES RATED AT THE FOLLOWING OUTDOOR CONDITIONS: COOLING - 95 DEG. F. D.B., 75 DEG. F. W.B. HEATING - 47 DEG. F D.B., 43 DEG. W.B.
2. CAPACITIES RATED AT THE FOLLOWING INDOOR CONDITIONS: COOLING - 80 DEG. F. D.B., 67 DEG. F. W.B., HEATING - 70 DEG F DB
3. PROVIDE LOW AMBIENT HEAD CONTROLLER TO ALLOW COOLING OPERATION DOWN TO 0 DEG. F. D.B.
4. R410A REFRIGERANT.
5. WIRELESS REMOTE CONTROLLER. PROVIDE WALL MOUNTED HOLDER.
6. PROVIDE ACCESSORY CONDENSATE PUMP FOR INDOOR UNIT.
7. UNIT TO COME WITH STARTER, DISCONNECT, AND OVERCURRENT PROTECTION.

FUEL FIRED UNIT HEATER SCHEDULE

ID	MANUFACTURER AND MODEL NUMBER	LOCATION	TYPE	COMBUSTION / FLUE SIZE (IN)	AIRFLOW RATE (CFM)	INPUT HEATING LOAD (MBH)	OUTPUT HEATING LOAD (MBH)	ELECTRICAL: MOTOR SIZE (HP)	ELECTRICAL: MOTOR SPEED (RPM)	ELECTRICAL: FLA	ELECTRICAL: MOCP	ELECTRICAL: VOLT/PH/HZ	NOTES
UH-1A	REZNOR UDX-060	CULTURE TANK ROOM 01 101	NAT. GAS.	4	769	60.0	49.8	0.06	1550	2.4	15	115/1/60	(1)(2)(3)
UH-1B	REZNOR UDX-060	CULTURE TANK ROOM 01 101	NAT. GAS.	4	769	60.0	49.8	0.06	1550	2.4	15	115/1/60	(1)(2)(3)
UH-2A	REZNOR UDX-100	EQUIPMENT ROOM 01 102	NAT. GAS.	4	1345	105.0	87.1	0.25	1550	4.3	15	115/1/60	(1)(2)(3)
UH-2B	REZNOR UDX-100	EQUIPMENT ROOM 01 102	NAT. GAS.	4	1345	105.0	87.1	0.25	1550	4.3	15	115/1/60	(1)(2)(3)
UH-3A	REZNOR UDX-060	CULTURE TANK ROOM 02 103	NAT. GAS.	4	769	60.0	49.8	0.06	1550	2.4	15	115/1/60	(1)(2)(3)
UH-3B	REZNOR UDX-060	CULTURE TANK ROOM 02 103	NAT. GAS.	4	769	60.0	49.8	0.06	1550	2.4	15	115/1/60	(1)(2)(3)
UH-4	REZNOR UDX-030	BRINE SHRIP 106	NAT. GAS.	4	460	30.0	24.6	0.06	1550	1.9	15	115/1/60	(1)(2)(3)
UH-5	REZNOR UDX-030	WET LAB AREA 105	NAT. GAS.	4	460	30.0	24.6	0.06	1550	1.9	15	115/1/60	(1)(2)(3)
UH-6A	REZNOR UDX-030	INCUBATION ROOM 111	NAT. GAS.	4	460	30.0	24.6	0.06	1550	1.9	15	115/1/60	(1)(2)(3)
UH-6B	REZNOR UDX-030	INCUBATION ROOM 111	NAT. GAS.	4	460	30.0	24.6	0.06	1550	1.9	15	115/1/60	(1)(2)(3)
UH-7	REZNOR UDX-060	EQUIPMENT ROOM 02 114	NAT. GAS.	4	769	60.0	49.8	0.06	1550	2.4	15	115/1/60	(1)(2)(3)
UH-8A	REZNOR UDX-075	CULTURE TANK ROOM 116	NAT. GAS.	4	961	75.0	62.2	0.06	1050	3.7	15	115/1/60	(1)(2)(3)
UH-8B	REZNOR UDX-075	CULTURE TANK ROOM 116	NAT. GAS.	4	961	75.0	62.2	0.06	1050	3.7	15	115/1/60	(1)(2)(3)

1. GAS HEATING INPUT AT SEA LEVEL, ALL OTHER CAPACITIES AT ELEVATION.
2. SEALED COMBUSTION.
3. UNIT TO COME WITH DISCONNECT, OVERCURRENT PROTECTION, AND VENT KIT.
4. UNIT TO COME WITH LINE VOLTAGE THERMOSTAT. INTERLOCK WITH EXHAUST FAN.
5. INTERLOCK WITH EXHAUST FAN.

REVIEWED FOR CODE COMPLIANCE
Thomas M Peterson
12/14/2023
DIVISION OF FACILITIES CONSTRUCTION AND MANAGEMENT
DFCM CODE COMPLIANCE OFFICER

NO.	REVISIONS	BY	DATE
	PUBLISHED		

This document or any part therof in detail or design concept is the property of Forsgren Associates Inc. and shall not be copied without the written authroization of Forsgren Associates Inc.

DRAWN Author
DESIGNED Designer
APPROVED Checker
QA

ATTENTION
LINE IS 2-INCHES
AT 24"x36" SIZE
IF NOT 2-INCHES, SCALE DRAWINGS ACCORDINGLY

PROFESSIONAL ENGINEER — JEDEDIAH JENKINS — 8388845 — STATE OF UTAH

LOGAN FISH HATCHERY
UTAH DIVISION OF WILDLIFE RESOURCES
1465 WEST 200 NORTH
LOGAN, UTAH 84321

UTAH DNR WILDLIFE RESOURCES

FORSGREN Associates Inc.
9 5 WEST 1 0 0 SOUTH , STE . 1 1 5 , LOGAN , UT 8 4 3 2 1
PH: 435.227.0333 FAX: 435.227.0334

design west | architects
255 SOUTH 300 WEST
LOGAN, UT 84321

LOGAN FISH HATCHRY - WWAB

MECHANICAL SCHEDULES

PROJECT NO: 822249
SHEET NO: ME601
DATE: 10-04-23
PAGE NO: 39

KEYED NOTES

1. UNIT HEATER CONCENTRIC VENT THRU WALL. FLASH AND SEAL PENETRATION WEATHER TIGHT.
2. UNIT HEATER CONCENTRIC VENT THRU ROOF. FLASH AND SEAL PENETRATION WEATHER TIGHT.
3. NOT USED.
4. BACK DRAFT DAMPER.

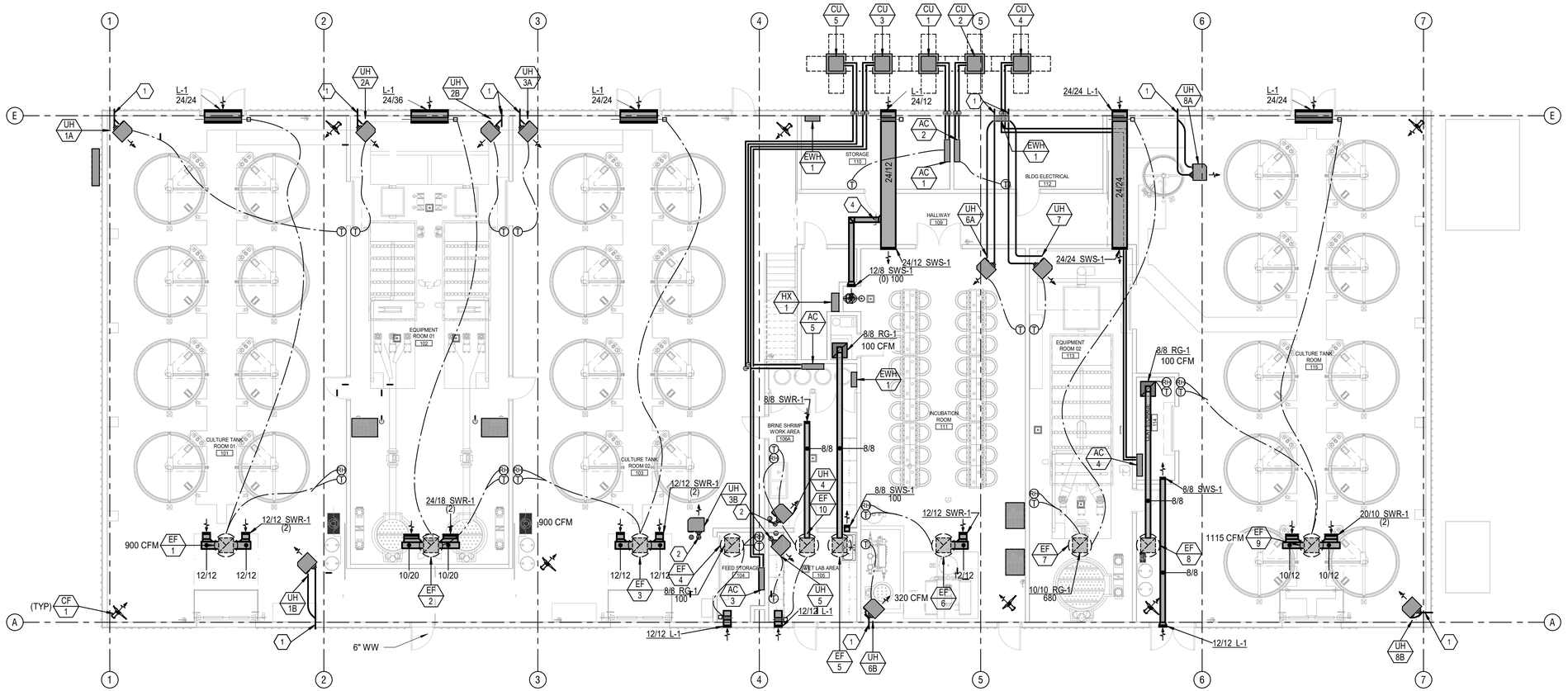

LEVEL 1 MECHANICAL PLAN

1/8" = 1'-0"

REVIEWED FOR CODE COMPLIANCE
Thomas W Peterson
12/1/2023
DIVISION OF FACILITIES CONSTRUCTION AND MANAGEMENT

DFCM CODE COMPLIANCE OFFICER

NO.	REVISIONS	BY DATE
	PUBLISHED	

This document or any part thereof in detail or design concept is the property of Forsgren Associates Inc. and shall not be copied without the written authroization of Forsgren Associates Inc.

DRAWN Author
DESIGNED Designer
APPROVED Checker
QA

ATTENTION
LINE IS 2-INCHES
AT 24"x36" SIZE
IF NOT 2-INCHES, SCALE DRAWINGS ACCORDINGLY

PROFESSIONAL ENGINEER JEDEDIAH JENKINS 8388845 STATE OF UTAH

LOGAN FISH HATCHERY
UTAH DIVISION OF WILDLIFE RESOURCES
1465 WEST 200 NORTH
LOGAN, UTAH 84321

UTAH DNR WILDLIFE RESOURCES

FORSGREN Associates Inc.
9 5 WEST 1 0 0 SOUTH , STE . 1 1 5 , LOGAN , UT 8 4 3 2 1
PH: 435.227.0333 FAX: 435.227.0334

design west | architects
255 SOUTH 300 WEST
LOGAN, UT 84321

LOGAN FISH HATCHRY - WWAB

LEVEL 1 MECHANICAL PLAN

PROJECT NO: 822249
SHEET NO: MH101
DATE: 10-04-23
PAGE NO: 40

KEYED NOTES

1. SEE SITE PLAN FOR CONTINUATION.
2. CONNECT TO OXYGEN SUPPLY PROVIDED BY OTHERS.
3. GAS METER.
4. 2 PSIG TO 4 OZ GAS PRESSURE REGULATOR. CFH AS NOTED.
5. CONNECT GAS PIPING TO BOILER.

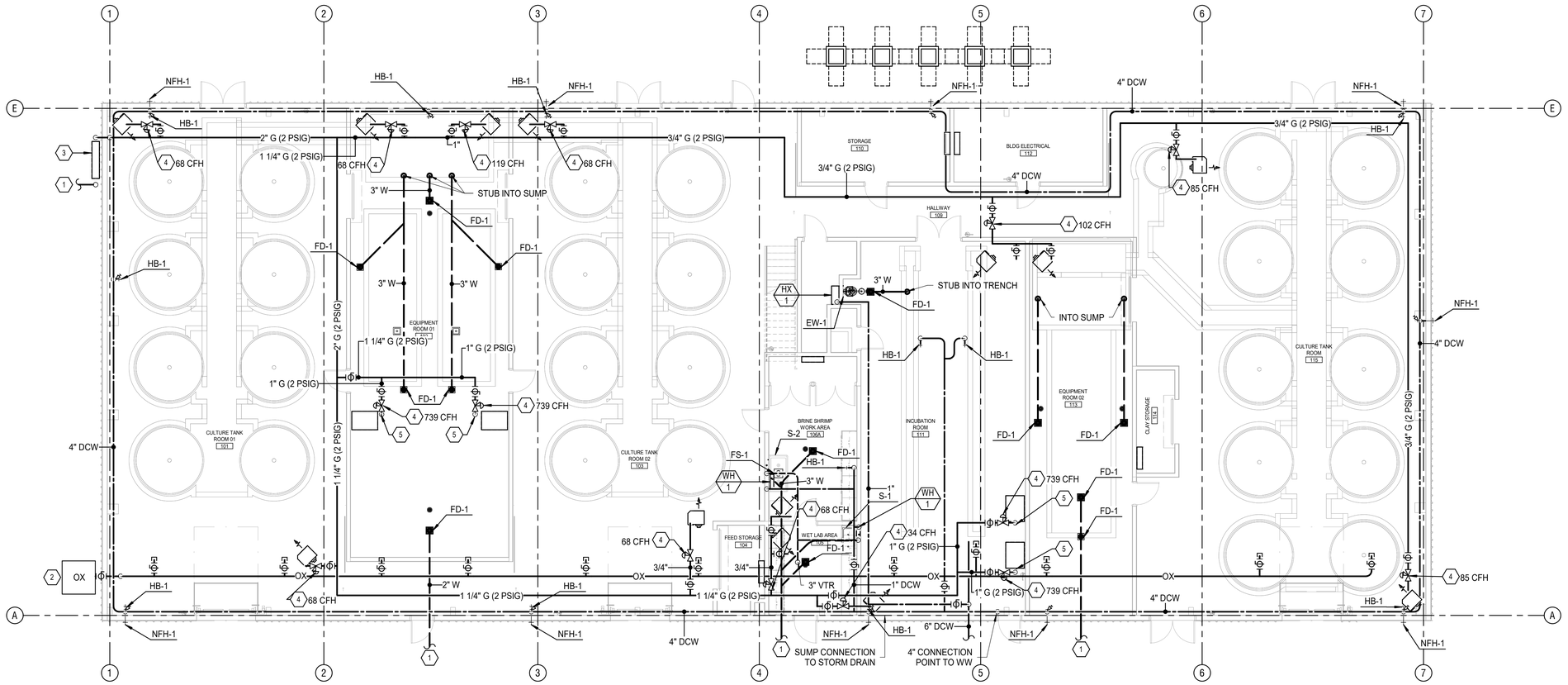

LEVEL 1 PLUMBING PLAN

1/8" = 1'-0"

REVIEWED FOR CODE COMPLIANCE
Thomas W Peterson
12/14/2023
DIVISION OF FACILITIES CONSTRUCTION AND MANAGEMENT

DFCM CODE COMPLIANCE OFFICER

PUBLISHED		
NO.	REVISIONS	BY DATE

This document or any part therof in detail or design concept is the property of Forsgren Associates Inc. and shall not be copied without the written authroization of Forsgren Associates Inc.

DRAWN Author
DESIGNED Designer
APPROVED Checker
QA

ATTENTION
LINE IS 2-INCHES
AT 24"x36" SIZE
IF NOT 2-INCHES, SCALE DRAWINGS ACCORDINGLY

PROFESSIONAL ENGINEER JEDEDIAH JENKINS 8388845 STATE OF UTAH

LOGAN FISH HATCHERY
UTAH DIVISION OF WILDLIFE RESOURCES
1465 WEST 200 NORTH
LOGAN, UTAH 84321

UTAH DNR WILDLIFE RESOURCES

FORSGREN Associates Inc.
9 5 WEST 1 0 0 SOUTH , STE . 1 1 5 , LOGAN , UT 8 4 3 2 1
PH: 435.227.0333 FAX: 435.227.0334

design west | architects
255 SOUTH 300 WEST
LOGAN, UT 84321

LOGAN FISH HATCHRY - WWAB

LEVEL 1 PLUMBING PLAN

PROJECT NO: 822249
SHEET NO: PL101
DATE: 10-04-23
PAGE NO: 41

7 P501 ELECTRIC WATER HEATER DETAIL

NO SCALE

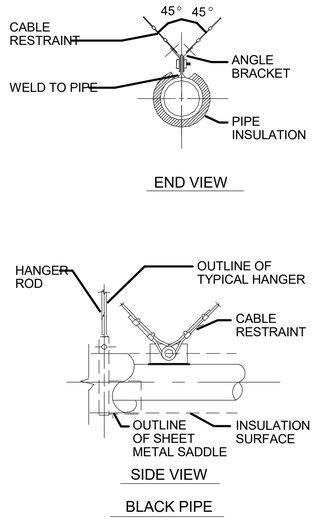

6 P501 PIPING RESTRAINT DETAIL

NO SCALE

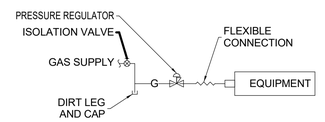

5 P501 NATURAL GAS CONNECTION DETAIL

NO SCALE

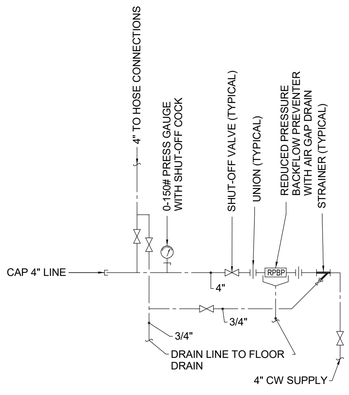

4 P501 WATER HEADER DETAIL

NO SCALE

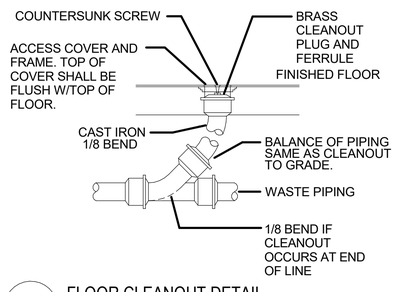

3 P501 FLOOR CLEANOUT DETAIL

NO SCALE

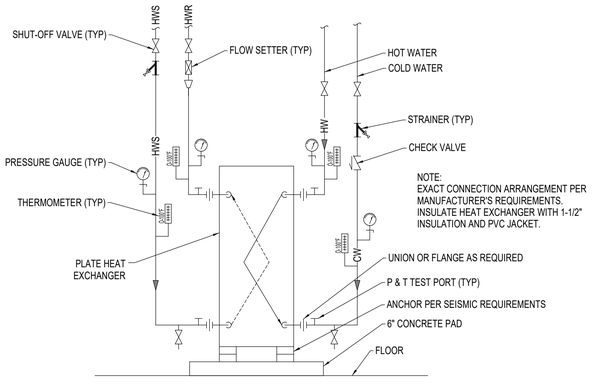

2 P501 HEAT EXCHANGER PIPING DIAGRAM

NO SCALE

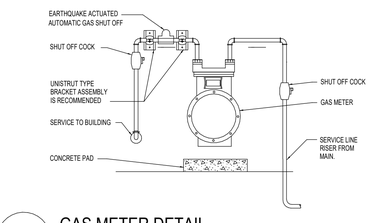

1 P501 GAS METER DETAIL

NO SCALE

REVIEWED FOR CODE COMPLIANCE
Thomas W Peterson
12/14/2023
DIVISION OF FACILITIES CONSTRUCTION AND MANAGEMENT

DFCM CODE COMPLIANCE OFFICER

NO.	REVISIONS	BY DATE
	PUBLISHED	

This document or any part therof in detail or design concept is the property of Forsgren Associates Inc. and shall not be copied without the written authroization of Forsgren Associates Inc.

DRAWN Author
DESIGNED Designer
APPROVED Checker
QA

ATTENTION
LINE IS 2-INCHES AT 24"x36" SIZE
IF NOT 2-INCHES, SCALE DRAWINGS ACCORDINGLY

PROFESSIONAL ENGINEER JEDEDIAH JENKINS 8388845 STATE OF UTAH

LOGAN FISH HATCHERY
UTAH DIVISION OF WILDLIFE RESOURCES
1465 WEST 200 NORTH
LOGAN, UTAH 84321

UTAH DNR WILDLIFE RESOURCES

FORSGREN Associates Inc.
9 5 WEST 1 0 0 SOUTH , STE . 1 1 5 , LOGAN , UT 8 4 3 2 1
PH: 435.227.0333 FAX: 435.227.0334

design west | architects
255 SOUTH 300 WEST
LOGAN, UT 84321

LOGAN FISH HATCHRY - WWAB

PLUMBING DETAILS

PROJECT NO: 822249
SHEET NO: PL501
DATE: 10-04-23
PAGE NO: 42

PLUMBING FIXTURE SCHEDULE

ID	FIXTURE	CW (IN)	HW (IN)	W (IN)	V (IN)	SPECIFICATION
FD-1	FLOOR DRAIN	-.-	-.-	3	2	FLOOR DRAIN: SMITH 2220Y FLOOR DRAIN WITH CAST IRON BODY AND FLASHING COLLAR WITH 8" CAST IRON GRATE AND SEDIMENT BUCKET, NO-HUB CONNECTION AND DEEP SEAL P-TRAP. PROVIDE WITH TRAP GUARD.
FS-1	FLOOR SINK	-.-	-.-	3	2	FLOOR SINK: SMITH FIGURE 3100Y03-NB-C CAST IRON FLANGED RECEPTOR WITH ACID RESISTANT INTERIOR COATING, FLASHING CLAMP, NICKEL BRONZE RIM AND SECURED 1/2 GRATE AND ALUMINUM DOME BOTTOM STRAINER.
NFH-1	NON FREEZE WALL HYDRANT	3/4	-.-	-.-	-.-	NON-FREEZE HYDRANT: SMITH 5609QT NON-FREEZE WALL HYDRANT FOR WALL THICKNESS SHOWN ON PLAN. BRONZE HYDRANT, 3/4-INCH CONNECTION WITH BRASS CASING, INTEGRAL SELF-DRAINING VACUUM BREAKER, AND LOOSE KEY. PROVIDE AND INSTALL AN IPEX ISOLATION VALVE UP STREAM OF HYDRANT.
HB-1	HOSE BIBB	3/4	-.-	-.-	-.-	HOSE BIBB: ACORN 8121 BENT NOSE HOSE VALVE WITH VACUUM BREAKER, 3/4" MALE HOSE THREAD AND LOOSE KEY HANDLE. COORDINATE EXACT NOSE CONFIGURATION WITH INSTALLATION.
EW-1	EMERGENCY EYE/FACE WASH AND SHOWER	1/2	1/2	2	1 1/2	EMERGENCY EYE/FACE WASH AND SHOWER : GUARDIAN GBF1909 ADA EYE/FACE WASH PLASTIC SHOWER HEAD, GS-PLUS SPRAY HEADS. PROVIDE WITH GUARDIAN G6040 THERMOSTATIC MIXING VALVE INSTALLED IN SURFACE MOUNTED STAINLESS STEEL CABINET. PROVIDE WITH DUAL INLINE CHECK VALVES IN HOT AND COLD WATER SUPPLIES. SET MIXING VALVE TO 80 DEGREE TEMPERED WATER.
S-1	SINK	1/2	1/2	2	1 1/2	SINK (COUNTER MOUNTED DOUBLE COMPARTMENT): ELKAY MODEL DLR291810 29" X 18" X 10" DEEP 18 GA STAINLESS STEEL SINK; CUP STRAINER. CHICAGO NO. 786-GN8FCABCP WIDESPREAD LAVATORY FAUCET WITH PLAIN END GOOSENECK SPOUT AND 1.5 GPM FLOW CONTROL. 17 GA CAST BRASS P-TRAP WITH CLEAN-OUT PLUG. SERVICE STOPS.
S-2	SINK	1/2	1/2	2	1 1/2	SINK (FLOOR MOUNTED DOUBLE COMPARTMENT): ADVANCE TAB CO MODEL 93-42-48 16 GAUGE DOUBLE COMPARTMENT SCULLERY SINK. DEEP DRAWN, ROLLED RIM, BACKSPLASH, STEEL LEGS, QUANTITY (1) WALL MOUNTED FAUCETS WITH 8" CENTERS. CHICAGO FAUCETS 510-G204WSXKCAB WALL MOUNTED PRE-RINSE FAUCET WITH 1.0 GPM NOZZLE, CROSS HANDLES. PROVIDE AND INSTALL SERVICE STOPS, STRAINERS AND ADDITIONAL ZURN MODEL 40XL CHECK VALVES ON HOT AND COLD WATER INLETS. STAINLESS STEEL DRAIN AND INDIRECT WASTE PIPING.

1. ALL UNDER GROUND WASTE AND VENT SHALL BE 2" OR GREATER PER DRAWINGS.

ELECTRIC WATER HEATER SCHEDULE

ID	MANUFACTURER AND MODEL NUMBER	LOCATION	NOMINAL CAPACITY (GALLONS)	TYPE	DISCHARGE WATER TEMPERATU... (F)	GPH	ELECTRICAL STANDARD (KW)	ELECTRICAL V/PH	PHYSICAL HEIGHT/ WIDTH (IN)	PHYSICAL WEIGHT (LBS)	NOTES
WH-1	EEMAX EX200TC ML	BRINE SHRIMP...	0	TANKLESS	110	-	20	277/1	10.12/10.68/4.32	11	(1)
WH-2	BRADFORD WHITE...	WET LAB 105	2	TANK	110	7	1.5	120/1	12.75/10	13	(2)

(1) INSTALL WATER HEATER WITH SERVICE STOPS, AND UNIONS.

NATURAL GAS REQUIREMENTS

EQUIP. NO.	QTY.	LOCATION	EQUIPMENT	EQUIP BTUH INPUT	TOTAL CFH
UH-1A	**1**	**CULTURE TANK ROOM 01 101**	**UNIT HEATER**	**60,000.0**	**68**
UH-1B	**1**	**CULTURE TANK ROOM 01 101**	**UNIT HEATER**	**60,000.0**	**68**
UH-2A	**1**	**EQUIPMENT ROOM 01 102**	**UNIT HEATER**	**105,000.0**	**119**
UH-2B	**1**	**EQUIPMENT ROOM 01 102**	**UNIT HEATER**	**105,000.0**	**119**
UH-3A	**1**	**CULTURE TANK ROOM 02 103**	**UNIT HEATER**	**60,000.0**	**68**
UH-3B	**1**	**CULTURE TANK ROOM 02 103**	**UNIT HEATER**	**60,000.0**	**68**
UH-4	**1**	**BRINE SHRIP 106**	**UNIT HEATER**	**30,000.0**	**34**
UH-5	**1**	**WET LAB AREA 105**	**UNIT HEATER**	**30,000.0**	**34**
UH-6A	**1**	**INCUBATION ROOM 111**	**UNIT HEATER**	**30,000.0**	**34**
UH-6B	**1**	**INCUBATION ROOM 111**	**UNIT HEATER**	**30,000.0**	**34**
UH-7	**1**	**EQUIPMENT ROOM 02 114**	**UNIT HEATER**	**60,000.0**	**68**
UH-8A	**1**	**CULTURE TANK ROOM 116**	**UNIT HEATER**	**75,000.0**	**85**
UH-8B	**1**	**CULTURE TANK ROOM 116**	**UNIT HEATER**	**75,000.0**	**85**
B-1	**1**	**INCUBATION ROOM 111**	**WATER HEATER**	**650,000**	**739**
B-2	**1**	**INCUBATION ROOM 111**	**WATER HEATER**	**650,000**	**739**
B-3	**1**	**EQUIPMENT ROOM 01 102**	**WATER HEATER**	**650,000**	**739**
B-4	**1**	**EQUIPMENT ROOM 01 102**	**WATER HEATER**	**650,000**	**739**
TOTAL (BTUH) =	**3,379,440**				
BTU/CUBIC FT. =	880				
TOTAL CFH=	**3840**				

NEW 2 PSIG GAS METER TO BE INSTALLED BY GAS SUPPLIER AND PAID FOR BY CONTRACTOR.
METER COMPLETE WITH EARTHQUAKE VALVE.

HEAT EXCHANGER SCHEDULE

ID	MANUFACTURER AND MODEL NUMBER	TYPE	SERVICE	LOAD (BTU/H)	SOURCE MEDIUM (HYDRONIC) FLOW RATE (GPM)	SOURCE MEDIUM (HYDRONIC) ENTERING/ LEAVING TEMP. (°F)	SOURCE MEDIUM (HYDRONIC) WORKING FLUID	SOURCE MEDIUM (HYDRONIC) HEAD LOSS (PSI)	TRANSFER MEDIUM (HYDRONIC) FLOW RATE (GPM)	TRANSFER MEDIUM (HYDRONIC) ENTERING/ LEAVING TEMP. (°F)	TRANSFER MEDIUM (HYDRONIC) WORKING FLUID	TRANSFER MEDIUM (HYDRONIC) HEAD LOSS (PSI)	PHYSICAL LENGTH/ WIDTH/ HEIGHT (IN)	NOTES
HX-1	BELL & GOSSETT BPDW415-84	BRAZED PLATE	EYE WASH SHOWER	788,041	10	220/60	WATER	0.47	20	45/124	WATER	1.73	11/4.4/21	(1)

1. HEAT EXCHANGER MATERIALS SHALL BE DOUBLE WALL AND RATED FOR POTABLE WATER APPLICATIONS.

REVIEWED FOR CODE COMPLIANCE
Thomas W Peterson
12/14/2023
DIVISION OF FACILITIES CONSTRUCTION AND MANAGEMENT
DFCM CODE COMPLIANCE OFFICER

PUBLISHED

NO.	REVISIONS	BY	DATE

This document or any part therof in detail or design concept is the property of Forsgren Associates Inc. and shall not be copied without the written authroization of Forsgren Associates Inc.

DRAWN Author
DESIGNED Designer
APPROVED Checker
QA

ATTENTION
LINE IS 2-INCHES
AT 24"x36" SIZE
IF NOT 2-INCHES,
SCALE DRAWINGS ACCORDINGLY

PROFESSIONAL ENGINEER
JEDEDIAH JENKINS
8388845
STATE OF UTAH

LOGAN FISH HATCHERY
UTAH DIVISION OF WILDLIFE RESOURCES
1465 WEST 200 NORTH
LOGAN, UTAH 84321

UTAH DNR WILDLIFE RESOURCES

FORSGREN Associates Inc.
9 5 WEST 1 0 0 SOUTH , STE . 1 1 5 , LOGAN , UT 8 4 3 2 1
PH: 435.227.0333 FAX: 435.227.0334

design west | architects
255 SOUTH 300 WEST
LOGAN, UT 84321

LOGAN FISH HATCHRY - WWAB

PLUMBING SCHEDULES

PROJECT NO: 822249
SHEET NO: PL601
DATE: 10-04-23
PAGE NO: 43

GENERAL PROJECT NOTES

1. ALL ELECTRICAL INSTALLATIONS TO CONFORM TO THE LATEST NEC AND LOCAL CODES.
2. THE ELECTRICAL CONTRACTOR SHALL HAVE A COORDINATION MEETING WITH THE MECHANICAL CONTRACTOR, CONSTRUCTION SUPERINTENDANT AND ANY OTHER TRADES AS REQUIRED WITHIN SEVEN DAYS OF THE START OF THE JOB TO REVIEW CODE CLEARANCE REQUIREMENTS FOR PANELS, SWITCHES, AND OTHER ELECTRICAL GEAR SPECIFICALLY FOR THIS JOB. RECORD THE MEETING IN THE SUPERINDENT'S LOG. REPORT UNRESOLVED CONFLICTS TO THE ARCHITECT IMMEDIATELY.
3. ELECTRICAL CONTRACTOR'S PROJECT MANAGER AND ON-SITE PROJECT FOREMAN SHALL REVIEW VENDOR SUBMITTALS FOR ACCURACY PRIOR TO SUBMITTING TO ENGINEER. INACCURACIES SHALL BE CORRECTED PRIOR TO ENGINEER SUBMITTAL.
4. SUBMITTALS FOR EACH SYSTEM WILL BE REVIEWED BY ENGINEER UP TO TWO TIMES--ONE FULL SUBMITTAL FOR OVERALL COMPLIANCE AND ONE RESUBMITTAL. ADDITIONAL REVIEWS WILL BE CHARGED TO CONTRACTOR AT ENGINEER'S STANDARD BILLING RATE.
5. SUBMITTALS TO ENGINEER SHALL INCLUDE ALL SPECIFIED SYSTEMS IN FIRST SUBMITTAL. PARTIAL SUBMITTALS WILL BE RETURNED TO CONTRACTOR AS INCOMPLETE AND WILL BE CONSIDERED ONE OF TWO INCLUDED SUBMITTAL REVIEWS.
6. THE CLARITY OF RECORD DRAWING CHANGES MADE BY THE CONTRACTOR SHALL BE EQUAL TO THE ORIGINAL DRAWINGS AS JUDGED BY THE ARCHITECT OR THE RECORD SET WILL BE RETURNED TO THE CONTRACTOR FOR CLARIFICATION.
7. WHEN THE GENERAL CONTRACT CALLS FOR "RECORD" OR "AS-BUILT" DRAWINGS TO BE FURNISHED BY THE CONTRACTOR AT JOB COMPLETION, THE ELECTRICAL CONTRACTOR SHALL BE REQUIRED TO FURNISH A COMPLETE SET OF "BLUE-PRINT READY" AUTOCAD ELECTRICAL DRAWINGS FOR ALL CONTRACTOR GENERATED CHANGES FROM THE DRAWINGS OF A CLARITY EQUAL TO THE ORIGINAL DRAWINGS AS JUDGED BY THE ENGINEER. CONTACT ARCHITECT FOR DISKS OR REPRODUCIBLE ORIGINAL MEDIA. PROVIDE DRAWINGS ON CD IN AUTOCAD FORMAT.
8. DO NOT SCALE ELECTRICAL FLOOR PLANS. SEE ARCHITECTURAL DRAWINGS FOR ACCURATE DIMENSIONS AND FLOOR PLANS.
9. ELECTRICAL DEVICES CANNOT BE SHOWN TO SCALE AND SOMETIMES OVERLAP BUILDING ELEMENTS. REFER TO ARCHITECTURAL ELEVATIONS FOR ACCURATE MOUNTING LOCATIONS
10. ELECTRICAL CONTRACTOR SHALL CONTACT POWER COMPANY WITHIN THE FIRST WEEK OF THE START OF CONSTRUCTION AND NOTIFY THEM OF THE PROBABLE DATE WHEN THE NEW ELECTRICAL SERVICE CONNECTION WILL BE NEEDED.
11. THE ELECTRICAL CONTRACTOR SHALL BE RESPONSIBLE TO FIELD VERIFY ALL PANEL CLEARANCES PER NEC 110.26 AND NOTIFY ALL OTHER TRADES ON THE JOB OF THESE CODE REQUIREMENTS.
12. PANEL INDEXES SHALL INCLUDE ALL PERTINENT INFORMATION ON THE PANEL SCHEDULES INCLUDING INFORMATION ON LIGHTS AND OUTLETS. DO NOT SIMPLY COPY THE CIRCUIT DESCRIPTION COLUMN. INDEXES TO BE TYPEWRITTEN.
13. ALL PARALLEL CONDUCTORS TO BE INSTALLED IN ACCORDANCE WITH NEC ARTICLE 310.4. WIRE IS TO BE LAID ON A FLAT SURFACE FOR MEASUREMENT. USE TORQUE WRENCH ON TERMINATIONS.
14. MOUNTING HEIGHT OF GENERAL PURPOSE OUTLETS AND SWITCHES SHALL BE 16" TO BOTTOM AND 48" TO TOP RESPECTIVELY UNLESS OTHERWISE NOTED.
15. ALL ELECTRICAL EQUIPMENT SHALL BE LOCATED SO AS NOT TO BE COVERED BY PROCESS EQUIPMENT. REFER TO PROCESS EQUIPMENT DESIGNS PRIOR TO ROUGH-IN..
16. EMT IS NOT ALLOWED OUT OF DOORS.
17. DO NOT INSTALL IN-GRADE JUNCTION BOXES UNLESS SPECIFICALLY SHOWN ON DRAWINGS. CONDUCTORS SHALL BE RUN CONTINUOUS WITHOUT SPLICING FROM SOURCE OR DEVICE TO NEXT DEVICE.
18. CIRCUIT WIRE SIZES MUST, AT MINIMUM, MATCH NEC REQUIRED CONDUCTOR SIZES FOR CORRESPONDING OVERCURRENT PROCTECTIVE DEVICES. VERIFY WITH PANEL SCHEDULES BEFORE PULLING WIRE.
19. HOME RUNS MUST BE RUN EXACTLY AS SHOWN ON PLANS UNLESS OTHERWISE NOTED. DO NOT COMBINE HOME RUNS INTO ONE CONDUIT THAT ARE NOT SHOWN COMBINED ON THE DRAWINGS.
20. THE ELECTRICAL CONTRACTOR SHALL RUN BRANCH CIRCUIT CONDUITS IN A NEAT AND WORKMANLIKE MANNER SO AS TO CONSERVE OPEN SPACES AS MUCH AS POSSIBLE. HVAC DUCTWORK, PLUMBING, AND PROCESS PIPING SHALL HAVE LOCATION PRIORITY OVER BRANCH CIRCUIT CONDUIT RUNS.
21. PROVIDE AN EQUIPMENT GROUNDING CONDUCTOR, PULLED INTO THE CONDUIT WITH THE PHASE CONDUCTOR, IN ALL SERVICE, FEEDER, AND BRANCH CIRCUITS.
22. PROVIDE A NEUTRAL CONDUCTOR FOR EACH BREAKER TRIP HANDLE. NEUTRALS SHALL NOT BE SHARED BETWEEN BRANCH CIRCUITS.
23. ALL CIRCUITS TO BE MINIMUM #12 CU IN MINIMUM 3/4" CONDUIT UNLESS OTHERWISE NOTED.
24. DO NOT INSTALL MORE THAN THREE PHASE CONDUCTORS IN ANY HOME-RUN CONDUITS UNLESS SPECIFICALLY INDICATED ON DRAWINGS.
25. IDENTIFY ALL OUTLET COVER PLATES WITH THE PANEL AND CIRCUIT NUMBER.
26. A GFI OUTLET SHALL BE INSTALLED AT EACH LOCATION DESIGNATED BY "GFI" ON THE DRAWINGS. DOWNSTREAM PROTECTION BY A GFI OUTLET UPSTREAM IS NOT ALLOWED.
27. ALL CONVENIENCE OUTLETS MUST BE MOUNTED FLUSH WITH THE COVER PLATE AND SECURED FIRMLY TO THE OUTLET BOX.
28. ALL RECESSED LIGHT FIXTURES MUST CONFORM TO NEC 410
29. ALL RECESSED LIGHT FIXTURES THAT PENETRATE THE BUILDING THERMAL ENVELOPE SHALL BE SEALED WITH A GASKET OR CAULK BETWEEN THE HOUSING AND INTERIOR WALL OR CEILING COVERING
30. FIXTURE COUNTS SHOWN ON DRAWINGS ARE FOR REFERENCE ONLY. CONTRACTOR IS RESPONSIBLE TO VERIFY FIXTURE COUNTS AS PART OF BIDDING PROCESS.
31. CONNECT EMERGENCY CIRCUIT OF EMERGENCY LIGHT BATTERY PACK TO UNSWITCHED LIGHTING CIRCUIT SERVING FIXTURES IN AREA. INSTALL EXTRA CONDUCTORS AS REQUIRED. WIRE SO LAMPS IN NORMAL MODE ARE CONTROLLED AS NOTED ON LIGHTING PLANS. PROVIDE ADDITIONAL BALLASTS AS REQUIRED.
32. THE ELECTRICAL CONTRACTOR SHALL BE RESPONSIBLE TO REVIEW ALL SWITCH LOCATIONS WITH THE GENERAL CONTRACTOR PRIOR TO ROUGH-IN TO PREVENT ANY SWITCHES FROM BEING LOCATED ON THE WRONG SIDE OF THE DOOR.
33. COORDINATE LOCATION OF EXIT LIGHTS WITH ARCHITECT.
34. COORDINATE LOCATION OF LIGHT FIXTURES WITH PROCESS EQUIPMENT AND PIPING EQUIPMENT PRIOR TO ROUGH-IN. PROVIDE ADDITIONAL STRUT AND SUPPORTS TO SUSPEND FIXTURES BELOW PROCESS LINES TO KEEP FIXTURE ALIGNED.
35. FIELD VERIFY MOUNTING OF SURFACE FIXTURES SHOWN IN CONTINUOUS ROWS. MAKE ADJUSTMENTS SIDEWAYS OR UNDER OBSTRUCTIONS AS REQUIRED AND PROVIDE NECESSARY RACEWAY CONNECTIONS.
36. PENDANT FIXTURES SHALL HAVE SEISMIC RATED PENDANT CONNECTIONS AND SWIVEL JOINTS.
37. THE BOTTOM OF WALL MOUNTED FIXTURES MUST BE A MINIMUM OF 6'-8" AFF UNLESS FIXTURES ARE ADA COMPLIANT.
38. EXHAUST FANS FURNISHED AND INSTALLED BY MECHANICAL CONTRACTOR, WIRED BY ELECTRICAL CONTRACTOR.
39. REFER TO MECHANICAL PLANS FOR EXACT LOCATION OF MECHANICAL EQUIPMENT.
40. ELECTRICAL CONTRACTOR SHALL FURNISH ALL MOTOR DISCONNECTS, STARTERS, AND CONTROL STATIONS FOR MECHANICAL EQUIPMENT UNLESS THE SAME IS FURNISHED AS AN INTEGRAL PART OF THE EQUIPMENT. VERIFY WITH MECHANICAL CONTRACTOR PRIOR TO BID.
41. ELECTRICAL CONTRACTOR SHALL COORDINATE THE ROUTING OF CONDENSATE LINES ON MECHANICAL PADS WITH THE MECHANICAL CONTRACTOR. WIREWAYS AND DISCONNECTS REQUIRE 3-FEET FRONTAL CLEARANCE AND A MINIMUM 30" WIDTH CLEARANCE, OR THE WIDTH OF THE UNIT, WHICHEVER IS GREATER.
42. PROVIDE SAFETY DISCONNECTS AS REQUIRED AT ALL CONNECTIONS TO MECHANICAL EQUIPMENT. PROVIDE FUSING AND RATINGS PER NAMEPLATE INFORMATION OF EQUIPMENT SERVED.
43. DISCONNECT SWITCHES ARE SHOWN IN APPROXIMATE LOCATIONS ONLY. CONTRACTOR SHALL FIELD VERIFY LOCATION OF ALL ELECTRICAL SWITCHES AND MOTOR CONTROL FOR PROPER CODE CLEARANCES. NOTIFY ARCHITECT IMMEDIATELY OF ANY CONFLICTS WITH OTHER TRADES REGARDING PROPER EQUIPMENT CLEARANCES.
44. COORDINATE LOCATION OF THERMOSTATS, SENSORS, HUMIDISTATS, AND JUNCTION BOXES WITH MECHANICAL CONTRACTOR BEFORE INSTALLATION.
45. BEFORE RUNNING CONDUITS, PLACING OUTLETS OR ORDERING EQUIPMENT, THE CONTRACTOR SHALL REVIEW THE SPECIFICATIONS AND DESIGN AND SHOP DRAWINGS OF THE OTHER TRADES SERVED BY THE CONDUIT, OUTLETS, AND/OR EQUIPMENT.
46. PROVIDE NEUTRAL CONNECTION TO 208/240/480V, SINGLE-PHASE AND THREE PHASE EQUIPMENT.
47. RUN SEPARATE GROUND WIRE TO ALL OUTDOOR UNITS AND BOND TO THE EQUIPMENT GROUND LUG.
48. ELECTRICAL CONTRACTOR SHALL INSTALL A PULL STRING IN ALL UNUSED POWER AND LIGHTING CONDUITS.
49. WHERE THERE ARE CONFLICTS IN THE DRAWINGS AND/OR SPECIFICATIONS THE CONTRACTOR SHALL NOTIFY THE ARCHITECT/ENGINEER PRIOR TO BID. WHERE NO NOTIFICATION IS GIVEN THE MORE STRINGENT INTERPRETATION (GENERALLY INTERPRETED TO BE THE MORE COSTLY) WILL BE ENFORCED.

ELECTRICAL LEGEND

ANNOTATIONS

X / XXX	DETAIL CALL-OUT; TOP "X" REFERS TO DETAIL NUMBER & BOTTOM "XXX" REFERS TO SHEET NUMBER
#	KEYED NOTE CALLOUT
##	EQUIPMENT CALLOUT
##	PRODUCTION EQUIPMENT CALLOUT

LIGHTING FIXTURES

	EMERGENCY LIGHT
	BATTERY PACK
	EXIT LIGHT: CEILING - FACE(S) AS SHOWN
	EXIT LIGHT: WALL - FACE(S) AS SHOWN
	STRIP LIGHT
	LINEAR FIXTURE
	EMERGENCY FIXTURE
	WALL MOUNT FIXTURE
	SUSPENDED FIXTURE

LIGHTING CONTROL

$X	SINGLE POLE SWITCH; "x" INDICATES SWITCH GROUP
$3	THREE WAY SWITCH
$4	FOUR WAY SWITCH
$LSX/SY	DIGITAL LIGHTING CONTROL SWITCH; SX = SWITCH CONTROL TYPE #1; SY = SWITCH CONTROL TYPE #2; ETC.
$X DL	SWITCH: DAYLIGHT ZONE AS DETAILED
LV	LOW VOLTAGE DIMMING SWITCH; X=# OF BUTTON INPUTS
VS	WALL MOUNT OCCUPANCY SENSOR: VACANCY SENSOR FUNCTION
OS	WALL MOUNT OCCUPANCY SENSOR: OCCUPANCY SENSOR FUNCTION
S	OCCUPANCY SENSOR
S DT	OCCUPANCY SENSOR: DUAL TECHNOLOGY
S VS	OCCUPANCY SENSOR: VACANCY SENSOR FUNCTION
S OS	OCCUPANCY SENSOR: OCCUPANCY SENSOR FUNCTION
P	PHOTOCELL
	PUSH BUTTON

BRANCH CIRCUITING

	SIMPLEX OUTLET
	SIMPLEX OUTLET: GROUND FAULT INTERRUPTER
	DUPLEX OUTLET
	FACELESS GFCI PROTECTION DEVICE
	DUPLEX OUTLET: GROUND FAULT INTERRUPTER
EWC	ELECTRIC WATER COOLER OUTLET: GFCI UNLESS NOTED
WP	DUPLEX OUTLET: WEATHERPROOF
WPIU	DUPLEX OUTLET: WEATHERPROOF-IN-USE COVER
	DOUBLE DUPLEX OUTLET
	DOUBLE DUPLEX OUTLET: GROUND FAULT INTERRUPTER
	SPECIAL OUTLET: SEE PANEL SCHEDULE
J	JUNCTION BOX
T	THERMOSTAT
H	HUMIDISTAT
L	MOTORIZED LOUVRE
	DISCONNECT; NO OVER-CURRENT PROTECTION
	DISCONNECT WITH OVER-CURRENT PROTECTION (CIRCUIT BREAKER STYLE OR AS SPECIFIED)
	COMBINATION DISCONNECT/MOTOR STARTER; NO OVER-CURRENT PROTECTION
	COMBINATION DISCONNECT/MOTOR STARTER WITH OVERCURRENT PROTECTION (CIRCUIT BREAKER STYLE OR AS SPECIFIED)
$m	MOTOR PROTECTIVE THERMAL SWITCH
$SSU	MOTOR PROTECTIVE FUSED THERMAL SWITCH
	QUANTITY OF CONDUCTORS: SHORT LINES = PHASE /SWITCH, LONG LINES = NEUTRAL
	HOME-RUN
	LIGHTING CIRCUIT W/ 0-10V DIMMING CONDUCTORS
	LIGHTING CONTROL CABLE

COMMUNICATIONS

	COMMUNICATIONS RACK
----CMJ ----	COMMUNICATIONS RACEWAY; OPEN D-RINGS OR J-HOOKS. SEE DETAILS AND SPECIFICATIONS
----CMCx---	COMMUNICATIONS RACEWAY: "x" 4" CONDUITS, UNLESS OTHERWISE NOTED
---- xCDy ---	COMMUNICATIONS RACEWAY: "x" CONDUITS OF "y" DIAMETER
LR#	COMMUNICATIONS LADDER RACK. SEE SPECIFICATIONS AND / OR SCHEDULES
CT#	COMMUNICATIONS RACEWAY CABLE TRAY. SEE SPECIFICATIONS AND / OR SCHEDULES
	PHONE BACKBOARD
	COMMUNICATIONS ENCLOSURE
	TELEVISION OUTLET (5" SQ x 2-7/8"D J-BOX; 1-GANG x 5/8"D MUD-RING; 1" CONDUIT, 1-RG-6 COAX)
	COMMUNICATIONS OUTLET (5" SQ x 2-7/8"D J-BOX; 1-GANG x 5/8"D MUD-RING; 1" CONDUIT, 1 CAT 6 CABLE)
	COMMUNICATIONS OUTLET (5" SQ x 2-7/8"D J-BOX; 1-GANG x 5/8"D MUD-RING; 1" CONDUIT, 2 CAT 6 CABLES)
	COMMUNICATIONS OUTLET (5" SQ x 2-7/8"D J-BOX; 1-GANG x 5/8"D MUD-RING; 1" CONDUIT; 3 CAT 6 CABLES)
X	COMMUNICATIONS OUTLET (5" SQ x 2-7/8"D J-BOX; 1-GANG x 5/8"D MUD-RING; 1" CONDUIT; x CAT 6 CABLES)
WAP	COMMUNICATIONS OUTLET: WIRELESS ACCESS POINT (5" SQ x 2-7/8"D J-BOX; 1-GANG x 5/8"D MUD-RING; 1" CONDUIT, 1 CAT 6 CABLE)

SITE ELECTRICAL

--(E)3ØOP--	3-PHASE OVERHEAD PRIMARY POWER : EXISTING
----3ØOP---	3-PHASE OVERHEAD PRIMARY POWER
----3ØOS---	3-PHASE OVERHEAD SECONDARY POWER
----3ØOT---	3-PHASE OVERHEAD TRANSMISSION LINES
--(E)3ØUP--	3-PHASE UNDERGROUND PRIMARY POWER : EXISTING
--(E)3ØUS--	3-PHASE UNDERGROUND SECONDARY POWER : EXISTING
----3ØUP---	3-PHASE UNDERGROUND PRIMARY POWER
----3ØUS---	3-PHASE UNDERGROUND SECONDARY POWER
-----OT-----	OVERHEAD TELEPHONE
-----OTV-----	OVERHEAD TV
----(E)UT---	UNDERGROUND TELEPHONE : EXISTING
---(E)UTV---	UNDERGROUND TV : EXISTING
-----UC-----	UNDERGROUND CONDUIT
----UTV----	UNDERGROUND TV
	POINT OF DISCONNECTION
	POINT OF CONNECTION
	UTILITY POLE

ONE-LINE

XA / YP	BREAKER : "x" = BREAKER AMPERAGE "y" = QUANTITY OF POLES
	BRANCH PANEL
	BRANCH PANEL WITH MAIN BREAKER
	BRANCH PANEL WITH SUB FEED BREAKER
x	FEEDER SIZE (REFER TO CONDUIT AND CONDUCTOR SCHEDULE UNLESS OTHERWISE NOTED)
	GROUND
M	CT AND METER
	TRANSFORMER
G	GENERATOR
G	GENERATOR ANNUNCIATOR
A	ATS ANNUNCIATOR
	TRANSFER SWITCH (AUTOMATIC UNLESS OTHERWISE NOTED)
SPD	SURGE PROTECTIVE DEVICE
XA / YP	SWITCH : "x" = SWITCH AMPERAGE, "y" = QUANTITY OF POLES
XA / YP	SWITCH : SHUNT TRIP
x-y	FUSE : "x" = FUSE TYPE, "y" = FUSE AMPERAGE
GFP	BREAKER WITH GROUND FAULT PROTECTION
	BREAKER : SHUNT TRIP
CL	BREAKER : CURRENT LIMITING
hp	MOTOR : hp = MOTOR HORSEPOWER

POWER AND DISTRIBUTION

	DISTRIBUTION PANEL
	PANELBOARD
	METER / METER SOCKET

GENERAL WALL-MOUNTED BOX HEIGHT DETAIL

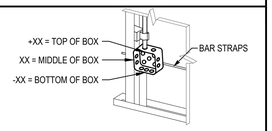

REFER TO POWER, LIGHTING AND COMMUNICATIONS PLANS FOR SPECIFIC DIMENSIONS. SEE GENERAL NOTES AND SPECIFICATIONS WHERE NO HEIGHTS ARE INDICATED.

SHEET INDEX

Sheet Number	Sheet Title
EE001	ABBREVIATIONS G.P.N. LEGEND & SHEET INDEX
ES101	ELECTRICAL SITE PLAN
EL101	LIGHTING PLAN
EP101	POWER PLAN
EP102	ELECTRICAL DETAILS
EP103	ELECTRICAL ONE-LINE DIAGRAM
EP104	ELECTRICAL SCHEDULES

ELECTRICAL ABBREVIATIONS

A	AMPERE	LTG	LIGHTING
AF	AMP FUSE	MAX	MAXIMUM
AFF	ABOVE FINISHED FLOOR	MCB	MAIN CIRCUIT BREAKER
AFG	ABOVE FINISHED GRADE	MECH	MECHANICAL
AFI	ARC-FAULT CIRCUIT-INTERRUPTER	MFR	MANUFACTURER
AIC	AMPERE INTERRUPTING CAPACITY	MIN	MINIMUM
AL	ALUMINUM	MLO	MAIN LUGS ONLY
ARCH	ARCHITECT(URAL)	MTD	MOUNTED
AS	AMP SWITCH	NEC	NATIONAL ELECTRICAL CODE
AWG	AMERICAN WIRE GAUGE	NECA	NATIONAL ELECTRICAL CONTRACTOR'S ASSOCIATION
BLDG	BUILDING	NEMA	NATIONAL ELECTRICAL MANUFACTURERS ASSOCIATION
BKBD	BACKBOARD	N, NEUT	NEUTRAL
C	CONDUIT	NFC	NATIONAL FIRE CODE
CAB	CABINET	NC	NORMALLY CLOSED
CAT	CATALOG/CATEGORY	NIC	NOT IN CONTRACT
C/B	CIRCUIT BREAKER	NL	NIGHT LITE
CKT	CIRCUIT	NO	NORMALLY OPEN
CLG	CEILING	NTS	NOT TO SCALE
CO	CONDUIT ONLY	OCP	OVERCURRENT PROTECTION
COMM	COMMUNICATION	P	POLE
CONN	CONNECTION	PH	PHASE
CU	COPPER	PNL	PANEL
DEMO	DEMOLITION/DEMOLISH	PWR	POWER
DISC	DISCONNECT	QTY	QUANTITY
DN	DOWN	RECEP	RECEPTACLE
DWG	DRAWING	REQ'D	REQUIRED
EA	EACH	RGSC	RIGID GALVANIZED STEEL CONDUIT
ELEC	ELECTRICAL	RM	ROOM
ELEV	ELEVATOR	SCHED	SCHEDULE
EMER, EM	EMERGENCY	SECT	SECTION
EMT	ELECTRICAL METALLIC TUBING	SP	SINGLE POLE
EOLR	END OF LINE RESISTOR	SN	SOLID NEUTRAL
EQUIP	EQUIPMENT	SPEC	SPECIFICATION
EX, EXIST	EXISTING	SW	SWITCH
FBO	FURNISHED BY OTHERS	SWBD	SWITCHBOARD
FCU	FAN COIL UNIT	SWGR	SWITCH GEAR
FF	FINISHED FLOOR	SYS	SYSTEM
FIXT	FIXTURE	TEMP	TEMPORARY
FLEX	FLEXIBLE METALLIC CONDUIT (STEEL)	TELE	TELEPHONE
FLUOR	FLUORESCENT	XFMR	TRANSFORMER
FT	FEET OR FOOT	T-STAT	THERMOSTAT
GFI	GROUND FAULT INTERRUPTER	TWP	TWISTED PAIR
G, GND	GROUND	TWSP	TWISTED SHEILDED PAIR
HP	HORSEPOWER	TYP	TYPICAL
HVAC	HEATING, VENTILATING & AIR CONDITIONING	UBC	UNIFORM BUILDING CODE
IG	ISOLATED GROUND	UL	UNDERWRITERS LABORATORY
IMC	INTERMEDIATE METAL CONDUIT	UMC	UNIFORM MECHANICAL CODE
IN	INCH(ES)	UNO	UNLESS NOTED OTHERWISE
ISC	SHORT CIRCUIT AMPERES, KA	V	VOLT OR VOLTAGE
JB, J-BOX	JUNCTION BOX	VA	VOLT AMPERE
KCMIL	THOUSAND CIRCULAR MILS	W	WATT
KVA	KILOVOLT AMPERE	W/	WITH
KW	KILOWATT	WG	WIRE GUARD
		WP	UL LISTED WEATHERPROOF, NEMA 3R or 4

REVIEWED FOR CODE COMPLIANCE
Thomas W Peterson
12/14/2023
DIVISION OF FACILITIES CONSTRUCTION AND MANAGEMENT
DFCM CODE COMPLIANCE OFFICER

NO.	REVISIONS	DATE
	PUBLISHED	

This document or any part therof in detail or design concept is the property of Forsgren Associates Inc. and shall not be copied without the written authroization of Forsgren Associates Inc.

DRAWN DDS
DESIGNED ECR
APPROVED ECR
QA ECR

ATTENTION
LINE IS 2-INCHES
AT 24"x36" SIZE
IF NOT 2-INCHES, SCALE DRAWINGS ACCORDINGLY

REGISTERED PROFESSIONAL ENGINEER
No. 6813611
ERIC C. RASMUSSEN
10/9/2023
STATE OF UTAH

LOGAN FISH HATCHERY
UTAH DIVISION OF WILDLIFE RESOURCES
1465 WEST 200 NORTH
LOGAN, UTAH 84321

UTAH DNR WILDLIFE RESOURCES

SINE SOURCE ENGINEERING
95 West Golf Course Road*Suite 102*Logan, UT 84321
Office: (435) 787-1445*Fax: 877-207-3199*www.sinesource.net

design west | architects
255 SOUTH 300 WEST
LOGAN, UT 84321

WARM WATER AQUACULTURE BUILDING
LOGAN HATCHERY IMPROVEMENT PROJECT
ABBREVIATIONS G.P.N. LEGEND & SHEET INDEX

PROJECT NO: 822249
SHEET NO: EE001
DATE: 10-2023
PAGE NO: 44

SHEET KEYED NOTES

1. COORDINATE NEW TRANSFORMER LOCATION WITH LOCAL UTILITY REP. VERIFY WORKING CLEARANCES AND EGRESS DOOR CLEARANCES AS PART OF COORDINATION..
2. NEW GROUND SLEEVE TIE-IN TO BE COMPLETED BY UTILITY COMPANY.
3. PROVIDE BOLLARDS AROUND TRANSFORMER AND GROUND SLEEVE PER UTILITY REQUIREMENTS.
4. STUB AND CAP (2)4" CONDUITS FROM COMMUNICATION JUNCTION ENCLOSURE TO AREA NEAR TRANSFORMER FOR FUTURE CAMPUS SCADA CONNECTION. COORDINATE EXACT STUB-UP LOCATION WITH OWNER'S SCADA REP PRIOR TO TRENCHING.
5. PROVIDE RV PEDESTAL AND MOUNT ON CONCRETE PAD. PAD BY OTHERS. REFER TO DETAILS D/EP102 AND F/EP102 FOR ADDITIONAL PEDESTAL REQUIREMENTS. COORDINATE EXACT PAD LOCATION WITH INSTALLER TO COMPLY WITH NEC 551.77(A). REFER TO G/EP102 FOR "BACK-IN" RV STALL PEDESTAL LOCATION.
6. REPLACE EXISTING HATCHERY BUILDING SERVICE WITH NEW. KEEP EXISTING SERVICE OPERATIONAL UNTIL SWITCHOVER. SEE PARTIAL POWER PLAN 3/EP101
7. STUB AND CAP (1)4" CONDUITS FROM COMMUNICATION JUNCTION ENCLOSURE TO EXISTING BUILDING'S EXTERIOR WALL FOR FUTURE NETWORK CONNECTION. COORDINATE EXACT STUB-UP LOCATION WITH OWNER'S I.T. REP PRIOR TO TRENCHING.
8. PROVIDE 24"X36"X36", OPEN BOTTOM, IN-GRADE, ANSI TIER 15 PRECAST CONCRETE PULL BOX (QUAZITE OR EQUIVALENT). FIELD VERIFY WITH UTILITY DRAWINGS PRIOR TO ORDERING. NOTIFY ENGINEER OF DISCREPANCY.

GENERAL SHEET NOTES

1. EXISTING ITEMS TO BE REMOVED ARE INDICATED AS BOLD/DASHED. ITEMS TO REMAIN ARE SHOWN AS LIGHT/SOLID.
2. CIRCUIT ROUTING IS SCHEMATIC UNLESS OTHERWISE NOTED.
3. COORDINATE ALL UTILITY INSTALLATIONS WITH LOCAL UTILITY REPS.
4. COMPLY WITH ALL UTILITY REQUIREMENTS FOR NEW UTILITY INSTALLATIONS.

1 ELECTRICAL SITE PLAN
Scale: 1"=40'-0"

REVIEWED FOR CODE COMPLIANCE
Thomas W Peterson
12/14/2023
DIVISION OF FACILITIES CONSTRUCTION AND MANAGEMENT
DFCM CODE COMPLIANCE OFFICER

NO.	REVISIONS	DATE
	PUBLISHED	

This document or any part therof in detail or design concept is the property of Forsgren Associates Inc. and shall not be copied without the written authroization of Forsgren Associates Inc.

DRAWN DDS
DESIGNED ECR
APPROVED ECR
QA ECR

ATTENTION
LINE IS 2-INCHES AT 24"x36" SIZE
IF NOT 2-INCHES, SCALE DRAWINGS ACCORDINGLY

REGISTERED PROFESSIONAL ENGINEER
No. 6813611
ERIC C. RASMUSSEN
10/9/2023
STATE OF UTAH

LOGAN FISH HATCHERY
UTAH DIVISION OF WILDLIFE RESOURCES
1465 WEST 200 NORTH
LOGAN, UTAH 84321

UTAH DNR WILDLIFE RESOURCES

SINE SOURCE ENGINEERING
95 West Golf Course Road*Suite 102*Logan, UT 84321
Office: (435) 787-1445*Fax: 877-207-3199*www.sinesource.net

design west | architects
255 SOUTH 300 WEST
LOGAN, UT 84321

WARM WATER AQUACULTURE BUILDING
LOGAN HATCHERY IMPROVEMENT PROJECT
ELECTRICAL SITE PLAN

PROJECT NO: 822249
SHEET NO: ES101
DATE: 10-2023
PAGE NO: 45

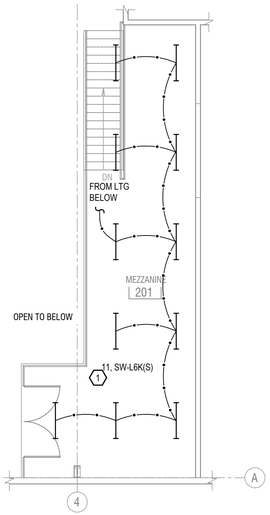

2 LIGHTING PLAN MEZZANINE
Scale: 1/8"=1'-0"

LIGHT FIXTURE SCHEDULE

	TYPE	MANUFACTURER/CATALOG NO.	DESCRIPTION	MOUNTING	POWER	LAMPS
	EX- 1B	DUAL LITE NV3-G-EN-W-CVS SURE-LITES CCX7-0-70-G-WH-SD LIGHTOLIER LT-N-U-G-W-SD LITHONIA LQM S W 3 G 120/277 EL N SD EELP XE-2-GW-EM-SD EXITRONIX MCPHILBEN CXXL-3-G-W	EXIT SIGN; SINGLE FACE; UNIVERSAL MOUNTING; WHITE, THERMOPLASTIC HOUSING; SELF DIAGNOSTICS; WIRE GUARD WHERE NOTED ON DRAWINGS	WALL 1-FACE	3W	LED
	OW2- L2K	LITHONIA WDGE2 LED-P2-35K-70CRI-T2M-MVOLT-PIR1FC3V-SCBO OR EQUIVALENT	EXTERIOR WALL TRAPEZOID AREA LIGHT; LED LAMPING; TYPE 2 OPTICAL DISTRIBUTION MULTI-VOLT, DIMMABLE DRIVER; SCBO=STNDARD COLOR BY OWNER INTEGRAL BI-LEVEL MOTION SENSOR WITH PHOTOCELL ENABLED FOR DUSK TO DAWN OPERATION	WALL	19 W	2087 LUMEN NOMINAL LED 3500K
	OW2- L4K	LITHONIA WDGE2 LED-P4-35K-70CRI-T2M-MVOLT-PIR1FC3V-SCBO OR EQUIVALENT	EXTERIOR WALL TRAPEZOID AREA LIGHT; LED LAMPING; TYPE 2 OPTICAL DISTRIBUTION MULTI-VOLT, DIMMABLE DRIVER; SCBO=STNDARD COLOR BY OWNER INTEGRAL BI-LEVEL MOTION SENSOR WITH PHOTOCELL ENABLED FOR DUSK TO DAWN OPERATION	WALL	47 W	4063 LUMEN NOMINAL LED 3500K
	OW4- L6K	LITHONIA WDGE3 LED-P1-35K-70CRI-T4M-MVOLT-PIRH1FC3V-SCBO OR EQUIVALENT	EXTERIOR WALL TRAPEZOID AREA LIGHT; LED LAMPING; TYPE 4 OPTICAL DISTRIBUTION MULTI-VOLT, DIMMABLE DRIVER; SCBO=STNDARD COLOR BY OWNER INTEGRAL BI-LEVEL MOTION SENSOR WITH PHOTOCELL ENABLED FOR DUSK TO DAWN OPERATION	WALL	52 W	7200 LUMEN NOMINAL LED 3500K
	OW4- L8K	LITHONIA WDGE3 LED-P2-35K-70CRI-T4M-MVOLT-PIRH1FC3V-SCBO OR EQUIVALENT	EXTERIOR WALL TRAPEZOID AREA LIGHT; LED LAMPING; FORWARD THROW DISTRIBUTION MULTI-VOLT, DIMMABLE DRIVER; SCBO=STNDARD COLOR BY OWNER INTEGRAL BI-LEVEL MOTION SENSOR WITH PHOTOCELL ENABLED FOR DUSK TO DAWN OPERATION	WALL	59 W	8500 LUMEN NOMINAL LED 3500K
	S4 L5K	LITHONIA CLX-L48-5000LM-SEF-FDL-MVOLT-GZ10-50K-80CRI-PS1050-SCBA OR EQUIVALENT	LED 4' STRIP FIXTURE; MULTI-VOLT, ELECTRONIC, DIMMABLE DRIVER; DIFFUSE LENS; AIRCRAFT CABLE SUSPENSION	CABLE SUSPENDED TO 10'	32W	5000 LUMEN NOMINAL LED 5000K
	SW- L4K	LITHONIA DMW2-L24-4000LM-AFL-MD-MVOLT-GZ10-50K-80CRI-ENTRY OR EQUIVALENT	2' SURFACE; WET LOCATION, CORROSION RESISTANT; LOW PROFILE LED FIXTURE; MULTI-VOLT, ELECTRONIC, DIMMABLE DRIVER; FROSTED ACRYLIC LENS	CEILING	40 W	4000 LUMEN NOMINAL LED 5000K
	SW- L6K SW- L6K(S)	LITHONIA FEM-L48-6000LM-LPPFL-MD-MVOLT-GZ10-50K-80CRI-(S:MHHK120SS) OR EQUIVALENT	4' WET LOCATION LED GASKETED FIXTURE; NEMA 4X; 0-10V 120/277 DIMMING DRIVER POLYCARBONATE, FROSTED LENS; MEDIUM DISTRIBUTION STAINLESS STEEL AIRCRAFT CABLE WHERE INDICATED BY FIXTURE APPEND (S)	CEILING OR CABLE SUSPENDED TO 10' WHERE INDICATED	37.8W	6000 LUMEN NOMINAL LED 5000K
	SW- 10K	LITHONIA FEM-L48-10000LM-LPPFL-MD-MVOLT-GZ10-50K-80CRI-SBOR10-MHHK120SS OR EQUIVALENT	4' WET LOCATION LED FIXTURE POLYCARBONATE, FROSTED LENS; MEDIUM DISTRIBUTION MOTION SENSOR; STAINLESS STEEL AIRCRAFT CABLE	CABLE SUSPENDED TO 12'	50.5W	10000 LUMEN NOMINAL LED 5000K

SHEET KEYED NOTES

1. DO NOT INSTALL OCCUPANCY SENSORS IN AREA TO PROTECT FISH HEALTH ACCORDING TO IECC C405.2.2 EXCEPTION (3).
2. EXTEND AN UNSWITCHED CIRCUIT CONDUCTOR TO EXTERIOR FIXTURE. PROVIDE INTEGRAL MOTION/ PHOTOCELL IN FIXTURES.
3. PROVIDE LOW VOLTAGE DIMMING SWITCH (LITHONIA nPODM-4P-DX-WH-LT OR AN EQUIVALENT DIMMING CAPABLE SYSTEM THAT MEETS PROJECT'S REQUIREMENTS). PROVIDE CAT5E CABLE BETWEEN SWITCHES AND DIMMING RELAY PACKS ACCORDING TO MANUFACTURE'S REQUIREMENTS. ADJUST PRE-SET DIMMING LEVELS TO OWNER'S SPECIFICATIONS.
4. PROVIDE DIMMING RELAY PACKS (LITHONIA nPP16 D OR AN EQUIVALENT DIMMING CAPABLE SYSTEM THAT MEETS PROJECT'S REQUIREMENTS). PROVIDE CAT5E CABLE BETWEEN SWITCHES AND DIMMING RELAY PACKS ACCORDING TO MANUFACTURE'S REQUIREMENTS. EXTEND 0-10V CONTROL WIRING FROM DIMMING RELAY PACKS TO CONTROLLED LIGHT FIXTURES.
5. TO TANK HIGH BAY LIGHTING. ROUTE CIRCUIT THROUGH LIGHTING CONTROL SERVING ROOM. REFER TO PROCESS EQUIPMENT DRAWINGS FOR LIGHTING CONTROL AND FIXTURES TO BE SUPPLIED BY ELECTRICIAN AS PART OF ELECTRICAL BID.
6. TO TANK LIGHTING. ROUTE CIRCUIT THROUGH LIGHTING CONTROL SERVING TANKS. REFER TO PROCESS EQUIPMENT DRAWINGS FOR LIGHTING CONTROL AND FIXTURES TO BE SUPPLIED BY ELECTRICIAN AS PART OF ELECTRICAL BID.
7. TO BRINE SHRIMP LIGHTING. ROUTE CIRCUIT THROUGH LIGHTING CONTROL SERVING TANKS. REFER TO PROCESS EQUIPMENT DRAWINGS FOR LIGHTING CONTROL AND FIXTURES TO BE SUPPLIED BY ELECTRICIAN AS PART OF ELECTRICAL BID.
8. REFER TO PROCESS DRAWINGS FOR FIXTURES AND LIGHTING CONTROL TO BE PROVIDED BY ELECTRICIAN AS PART OF ELECTRICAL BID AS PART OF ELECTRICAL BID.

GENERAL SHEET NOTES

1. CONNECT OCCUPANCY SENSORS TO ENABLE ALL SWITCHES IN CONTROLLED SPACE.
2. CONNECT OCCUPANCY SENSORS, BATTERY BALLASTS, EXIT SIGNS, ETC. TO UNSWITCHED SOURCE CONDUCTOR.
3. SEE POWER PLAN FOR ELECTRICAL DISTRIBUTION, EQUIPMENT AND LIGHTING RELAY PANEL LOCATIONS.
4. WHEN SUSPEND FIXTURES ARE SHOWN IN CONFLICT WITH DUCTWORK CONTRACTOR SHALL PROVIDE MOUNTING ACCESSORIES SO THAT FIXTURES MOUNT IN SAME LINE/PATTERN AS OTHER FIXTURES.
5. REFER TO PROCESS DRAWINGS FOR CIRCUITING TO PROCESS LIGHTING TO BE DONE BY ELECTRICIAN AS PART OF ELECTRICAL BID.
6. REFER TO PROCESS DRAWINGS FOR ADDITIONAL EQUIPMENT TO BE PROVIDED BY ELECTRICIAN AS PART OF ELECTRICAL BID INCLUDING, BUT NOT LIMITED TO, DISCONNECTS, CABLE TRAYS, VFDS, CONTROL PANELS, LIGHTING, LIGHTING CONTROL, ETC,
7. RACEWAYS SERVING NON-PROCESS EQUIPMENT/LOADS:
   - BELOW 12': RIGID CONDUIT
   - 12' AND ABOVE: EMT CONDUIT WITH COMPRESSION COUPLINGS
8. RACEWAYS SERVING PROCESS EQUIPMENT/LOADS:
   - REFER TO PROCESS SHOP DRAWINGS. PROVIDE CABLE TRAY PER SHOP DRAWINGS

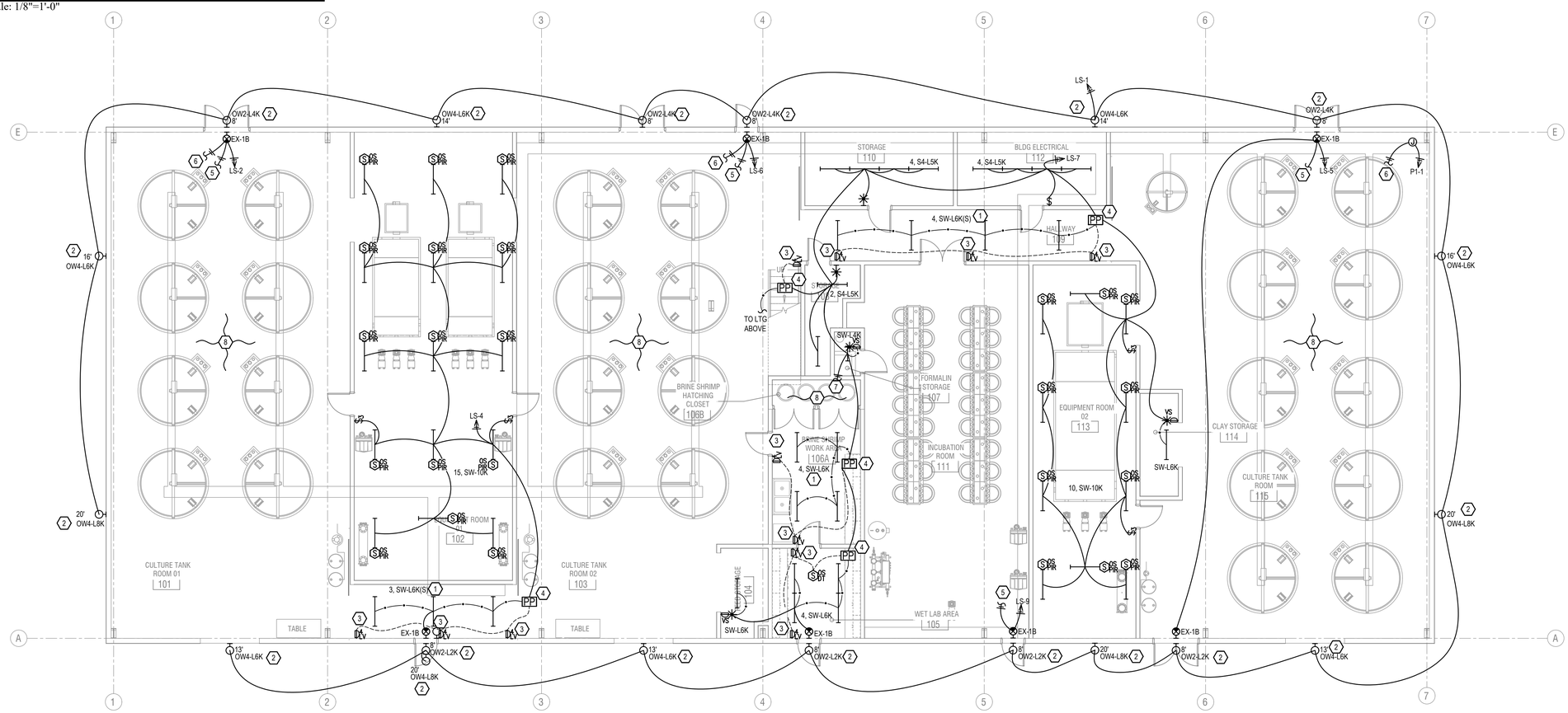

1 LIGHTING PLAN MAIN LEVEL
Scale: 1/8"=1'-0"

REVIEWED FOR CODE COMPLIANCE
Thomas W Peterson
12/14/2023
DIVISION OF FACILITIES CONSTRUCTION AND MANAGEMENT
DFCM CODE COMPLIANCE OFFICER

NO.	REVISIONS	DATE
	PUBLISHED	

This document or any part therof in detail or design concept is the property of Forsgren Associates Inc. and shall not be copied without the written authroization of Forsgren Associates Inc.

DRAWN DDS
DESIGNED ECR
APPROVED ECR
QA ECR

ATTENTION
LINE IS 2-INCHES
AT 24"x36" SIZE
IF NOT 2-INCHES, SCALE DRAWINGS ACCORDINGLY

REGISTERED PROFESSIONAL ENGINEER
No. 6813611
ERIC C. RASMUSSEN
10/9/2023
STATE OF UTAH

LOGAN FISH HATCHERY
UTAH DIVISION OF WILDLIFE RESOURCES
1465 WEST 200 NORTH
LOGAN, UTAH 84321

UTAH DNR WILDLIFE RESOURCES

SINE SOURCE ENGINEERING
95 West Golf Course Road*Suite 102*Logan, UT 84321
Office: (435) 787-1445*Fax: 877-207-3199*www.sinesource.net

design west | architects
255 SOUTH 300 WEST
LOGAN, UT 84321

WARM WATER AQUACULTURE BUILDING
LOGAN HATCHERY IMPROVEMENT PROJECT
LIGHTING PLAN

PROJECT NO: 822249
SHEET NO: EL101
DATE: 10-2023
PAGE NO: 46

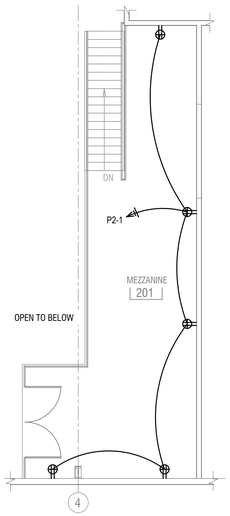

2 POWER PLAN MEZZANINE
Scale: 1/8"=1'-0"

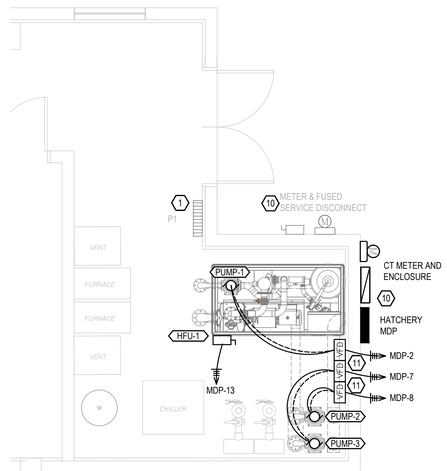

3 PARTIAL POWER PLAN: HATCHERY BUILDING
Scale: 3/16"=1'-0"

GENERAL SHEET NOTES

1. COORDINATE ALL SWITCH, OUTLET, LIGHT AND OTHER DEVICE LOCATIONS WITH ARCHITECTURAL ELEMENTS (CABINETS, WINDOWS ETC.) PRIOR TO ROUGH IN. REVIEW ARCHITECTURAL INTERIOR ELEVATIONS PRIOR TO ROUGH-IN OF EACH AREA FOR ADDITIONAL INFORMATION.
2. REFER TO PROCESS DRAWINGS FOR CIRCUITING TO PROCESS EQUIPMENT/LOADS TO BE DONE BY ELECTRICIAN AS PART OF ELECTRICAL BID.
2. REFER TO PROCESS DRAWINGS FOR ADDITIONAL EQUIPMENT TO BE PROVIDED BY ELECTRICIAN AS PART OF ELECTRICAL BID INCLUDING, BUT NOT LIMITED TO, DISCONNECTS, CABLE TRAYS, VFDS, CONTROL PANELS, LIGHTING, LIGHTING CONTROL, ETC.
3. EXPOSED RACEWAYS SERVING NON-PROCESS EQUIPMENT/LOADS:
   - BELOW 12': RIGID CONDUIT
   - 12' AND ABOVE: EMT CONDUIT WITH COMPRESSION COUPLINGS
4. RACEWAYS SERVING PROCESS EQUIPMENT/LOADS:
   - REFER TO PROCESS SHOP DRAWINGS. PROVIDE CABLE TRAY PER SHOP DRAWINGS
5. ALL CONDUIT SHALL BE RAN OVERHEAD UNLESS INDICATED OTHERWISE IN PROCESS EQUIPMENT DRAWINGS.

SHEET KEYED NOTES

1. RE-FEED EXISTING PANEL FROM NEW SERVICE.
2. PROVIDE WP-IN-USE, FLUSH-MOUNT BOX (ARLINGTON STEEL IN-BOX OR EQUIVALENT). COORDINATE TYPE WITH WALL CONSTRUCTION. FIELD PAINT INTERIOR AND TRIM TO MATCH BUILDING TRIM COLOR.
3. PROVIDE CONTROL ROUGH-IN FOR OPENER AND SENSORS AS REQUIRED. PROVIDE CONTROL WIRING PER EQUIPMENT REQUIREMENTS. EQUIPMENT AND DEVICES INDICATED ARE SHOWN FOR INTENT ONLY AND SHALL BE ADJUSTED PER EQUIPMENT REQUIREMENTS.
4. PROVIDE CIRCUIT FOR SELF CLEANING TANKS, EXTEND TO EACH TANK IN MODULE PER PROCESS SHOP DRAWINGS.
5. PROVIDE CIRCUIT FOR FLOW METERS IN ROOM, EXTEND TO EACH METER IN MODULE PER PROCESS SHOP DRAWINGS.
6. PROCESS EQUIPMENT SHOWN FOR REFERENCE. REFER TO PROCESS SHOP DRAWINGS FOR INSTALLATION REQUIREMENTS INCLUDING CIRCUITING, CONTROL CONDUCTORS, LOCATION, DISCONNECT, ETC.
7. PROVIDE NEMA 3R 3' X 3' ENCLOSURE FOR SCADA WIRING. PROVIDE (2)4" CONDUITS FROM ENCLOSURE TO ELEC. RM PLC, (2)4" CONDUITS FROM JUNCTION BOX OUT TO ROADWAY, AND (1)4" TO EXISTING ADJACENT BUILDING AS INDICATED ON SITE PLANS.
8. PROVIDE 12" REINFORCED CONCRETE GENERATOR PAD THAT EXTENDS 6" BEYOND GENERATOR FOOTPRINT IN ALL DIRECTION. REINFORCE WITH (2) EQUAL SPACED LAYERS OF #4 BARS SPACED 12" ON CENTER EA. WAY.
9. PROVIDE 6" BOLLARD TO PROTECT GENERATOR 4' O.C. SEE A/EP102
10. REPLACE EXISTING HATCHERY BUILDING SERVICE WITH NEW. KEEP EXISTING SERVICE OPERATIONAL UNTIL NEW SERVICE IS IN OPERATION.
11. COORDINATE VFD LOCATION WITH PUMP SUPPLIER PRIOR TO ROUGH-IN. PROVIDE 1" CONDUIT FROM VFD TO PUMP FOR CONTROL.
12. PROVIDE CIRCUIT FOR VALVE CONTROLLERS IN ROOM, EXTEND TO EACH CONTROLLER IN MODULE PER PROCESS SHOP DRAWINGS.

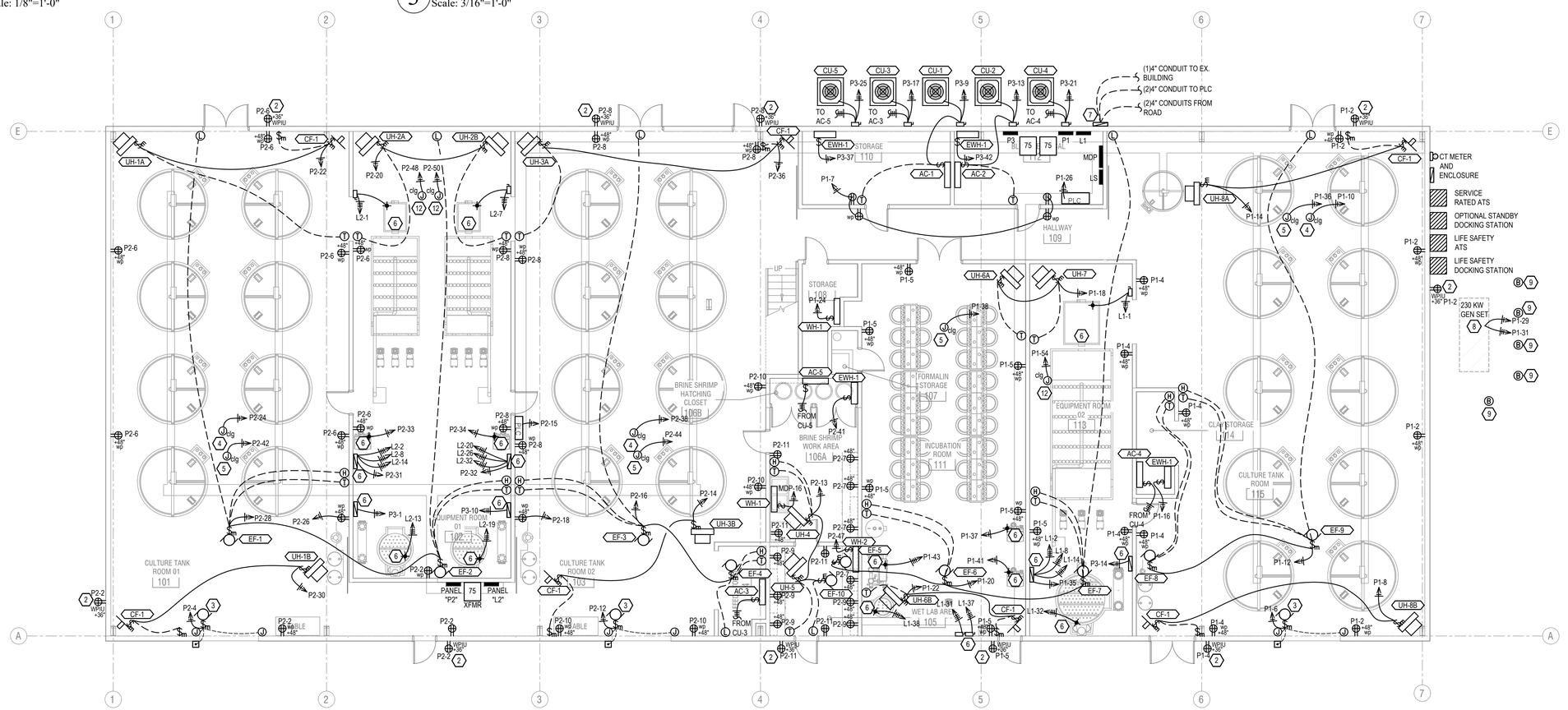

1 POWER PLAN MAIN LEVEL
Scale: 1/8"=1'-0"

REVIEWED FOR CODE COMPLIANCE
Thomas W Peterson
12/14/2023
DIVISION OF FACILITIES CONSTRUCTION AND MANAGEMENT
DFCM CODE COMPLIANCE OFFICER

PUBLISHED		
NO.	REVISIONS	DATE

This document or any part therof in detail or design concept is the property of Forsgren Associates Inc. and shall not be copied without the written authroization of Forsgren Associates Inc.

DRAWN	DDS
DESIGNED	ECR
APPROVED	ECR
QA	ECR

ATTENTION
LINE IS 2-INCHES AT 24"x36" SIZE
IF NOT 2-INCHES, SCALE DRAWINGS ACCORDINGLY

REGISTERED PROFESSIONAL ENGINEER
No. 6813611
ERIC C. RASMUSSEN
10/9/2023
STATE OF UTAH

LOGAN FISH HATCHERY
UTAH DIVISION OF WILDLIFE RESOURCES
1465 WEST 200 NORTH
LOGAN, UTAH 84321

UTAH DNR WILDLIFE RESOURCES

SINE SOURCE ENGINEERING
95 West Golf Course Road*Suite 102*Logan, UT 84321
Office: (435) 787-1445*Fax: 877-207-3199*www.sinesource.net

design west | architects
255 SOUTH 300 WEST
LOGAN, UT 84321

WARM WATER AQUACULTURE BUILDING
LOGAN HATCHERY IMPROVEMENT PROJECT
POWER PLAN

PROJECT NO:	
822249	
SHEET NO:	
EP101	
DATE:	PAGE NO:
10-2023	47

DETAIL KEYED NOTES

1. FIELD VERIFY DRIVER'S EDGE-LINE WITH OWNER.
2. REFER TO NEC 551.77(A) FOR ADDITIONAL INFORMATION.

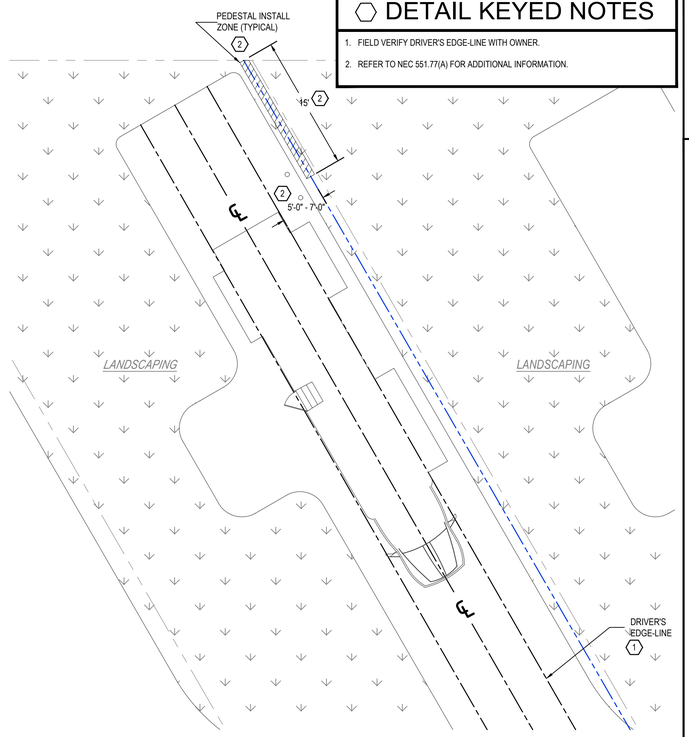

G TYPICAL "BACK-IN" RV STALL

SCALE: NTS

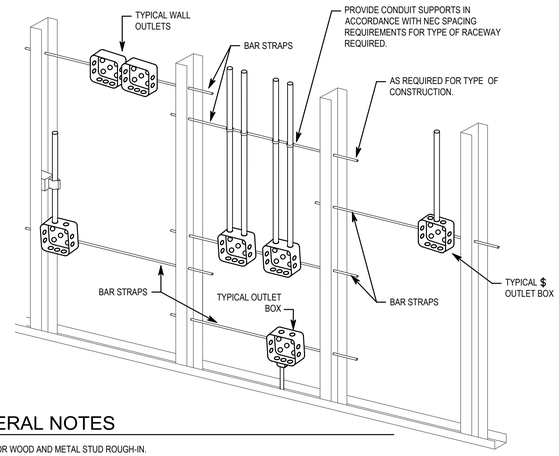

GENERAL NOTES

1. TYPICAL FOR WOOD AND METAL STUD ROUGH-IN.
2. PLASTER RINGS NOT SHOWN.
3. LOCATE ALL OUTLET BOXES IN ACCORDANCE WITH ARCHITECTURAL AND MECHANICAL DRAWINGS AND WITH ALL APPLICABLE SHOP DRAWINGS.
4. OUTLETS ON OPPOSITE SIDES OF WALLS OR PARTITIONS IN THE SAME STUD SPACE IN A RATED FIRE SEPARATION WALL MUST BE SEPARATED BY A MINIMUM OF 24" HORIZONTAL DISTANCE.
5. IN NON-RATED WALLS, OUTLETS ON OPPOSITE SIDES OF WALLS OR PARTITIONS MUST BE SEPARATED BY 16" FOR SOUND ATTENUATION.

E TYPICAL ROUGH-IN REQUIREMENTS DETAIL

SCALE: NTS

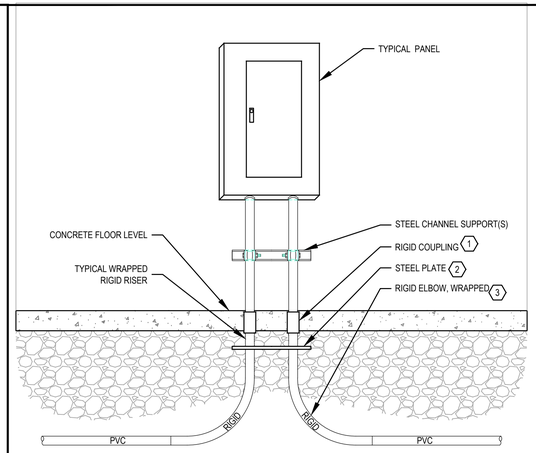

DETAIL KEYED NOTES

1. SET COUPLING FLUSH WITH FINISH FLOOR.
2. PROVIDE STEEL PLATE WITH SAME DIMENSIONS AS PANEL BOTTOM PLATE. PUNCH PLATE PER CONDUITS ENTERING PANEL TO STRAIGHTEN/ORGANIZE CONDUITS PRIOR TO FINAL RISE INTO PANEL.
3. TRANSITION TO WRAPPED RIGID CONDUIT PRIOR TO RISING ABOVE FLOOR AS SPECIFIED.

C EQUIPMENT CONDUIT RISER DETAIL

SCALE: NTS

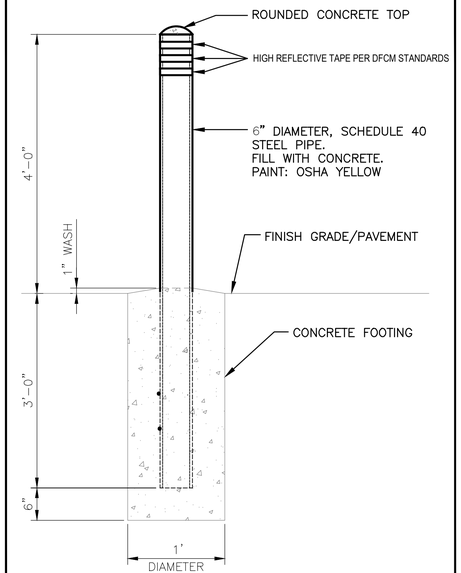

A 6" BOLLARD DETAIL

SCALE: NTS

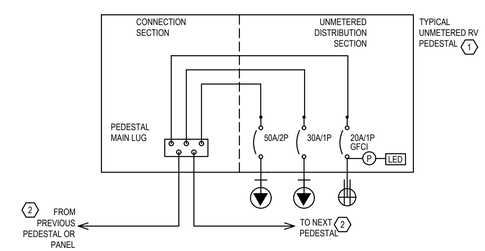

DETAIL KEYED NOTES

1. PROVIDE MIDWEST (CAT # VMKJHAUT) UN-METERED, NON-METALLIC PAD MOUNTED PEDESTAL WITH 50A/30/A/20AGFCI OUTLETS, INTEGRAL PHOTOCELL, AND LIGHT.
2. SEE PANEL SCHEDULES AND SITE PLAN FOR ADDITIONAL INFORMATION ON CIRCUITS.

F PEDESTAL WIRING DETAIL

SCALE: NTS

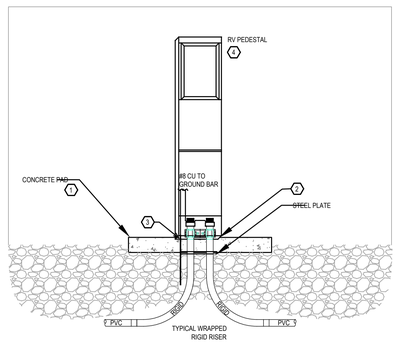

DETAIL KEYED NOTES

1. CONCRETE PAD BY OTHERS
2. ANCHOR PAD MOUNTED PEDESTAL TO CONCRETE PAD PER MANUFACTURER'S REQUIREMENTS
3. PROVIDE 10'X3/4" GROUND ROD.
4. PROVIDE MIDWEST (CAT # VMKJHAUT) UN-METERED NON-METALLIC PAD MOUNTED PEDESTAL WITH 50A/30/A/20A-GFCI OUTLETS, PHOTOCELL, AND LIGHT.

D PEDESTAL CONDUIT RISER DETAIL

SCALE: NTS

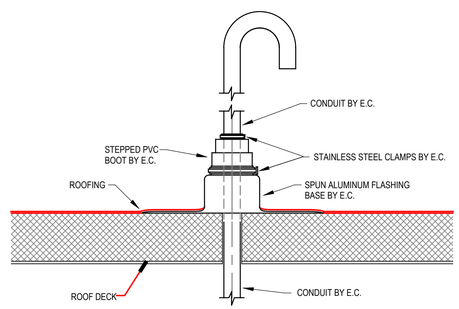

B ROOF PENETRATION DETAIL

SCALE: NTS

REVIEWED FOR CODE COMPLIANCE
Thomas W Peterson
12/14/2023
DIVISION OF FACILITIES CONSTRUCTION AND MANAGEMENT

DFCM CODE COMPLIANCE OFFICER

NO.	REVISIONS	DATE
	PUBLISHED	

This document or any part thereof in detail or design concept is the property of Forsgren Associates Inc. and shall not be copied without the written authroization of Forsgren Associates Inc.

DRAWN	DDS
DESIGNED	ECR
APPROVED	ECR
QA	ECR

ATTENTION
LINE IS 2-INCHES
AT 24"x36" SIZE
IF NOT 2-INCHES, SCALE DRAWINGS ACCORDINGLY

REGISTERED PROFESSIONAL ENGINEER
No. 6813611
ERIC C. RASMUSSEN
10/9/2023
STATE OF UTAH

LOGAN FISH HATCHERY
UTAH DIVISION OF WILDLIFE RESOURCES
1465 WEST 200 NORTH
LOGAN, UTAH 84321

UTAH DNR WILDLIFE RESOURCES

SINE SOURCE ENGINEERING
95 West Golf Course Road*Suite 102*Logan, UT 84321
Office: (435) 787-1445*Fax: 877-207-3199*www.sinesource.net

design west | architects
255 SOUTH 300 WEST
LOGAN, UT 84321

WARM WATER AQUACULTURE BUILDING
LOGAN HATCHERY IMPROVEMENT PROJECT
ELECTRICAL DETAILS

PROJECT NO:	822249
SHEET NO:	EP102
DATE:	10-2023
PAGE NO:	48

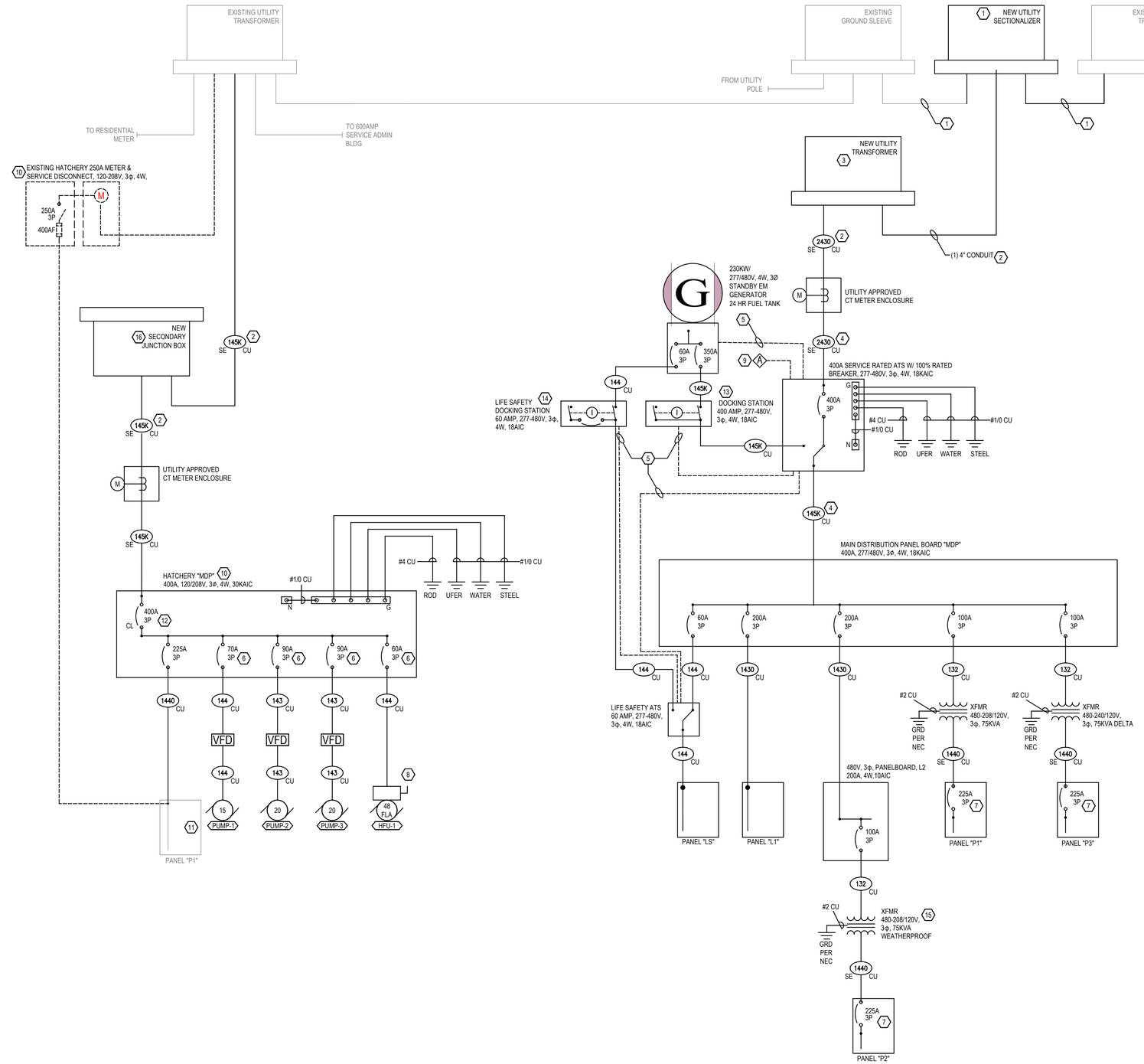

CONDUCTOR AND CONDUIT SCHEDULE

SIZE OF CONDUCTORS
QUANTITY OF PHASE/NEUTRAL CONDUCTORS
QUANTITY OF PARALLEL RUNS
SCHEDULE NUMBER
CONDUCTOR MATERIAL
SUBSCRIPTS (SEE NOTE 5)

SYM	AMP	CONDUIT		CONDUCTOR (NOTE 1,6,7)					NOTES
		QTY	SIZE	QTY	SIZE P/N	G CU	IG CU	SE (NOTE 8) CU	
1 2 12	20	1	3/4"	2	12	12	12	8	2
1 3 12				3					2,3
1 4 12				4					2,3
1 2 0	30			2	10	10	10		2
1 3 0				3					2
1 4 0				4					2
1 2 8	40		1"	2	8		8		2
1 3 8				3					2
1 4 8				4					2
1 2 6	55			2	6		6		2
1 3 6				3					2
1 4 6			1.25"	4					2
1 2 4	70			2	4	8	4		2
1 3 4				3					2
1 4 4				4					2
1 2 3	85			2	3		3		2
1 3 3				3					2
1 4 3				4					2
1 3 2	95			3	2		2		2
1 4 2			1.5"	4					2
1 3 1	130			3	1	6		6	2
1 4 1				4					2,8
1 3 10	150		2"	3	1/0				2
1 4 10				4					2
1 3 20	175			3	2/0			4	2
1 4 20				4					2
1 3 30	200			3	3/0				2
1 4 30			2.5"	4					2
1 3 40	230			3	4/0	4	1	2	2
1 4 40				4					2
1 3 25	255			3	250				2
1 4 25			3"	4					2,8
1 3 3K	285			3	300				2,8
1 4 3K				4					2
1 3 35	310			3	350	3	1/0		2
1 4 35				4					2,8
1 3 4K	335		3.5"	3	400			1/0	2
1 4 4K				4					2
1 3 5K	380		4"	3	500				2,4
1 4 5K				4					2,4
1 3 75	475			3	750	2	2/0	2/0	2,4
1 4 75				4					2,4
1 3 10K	545		5"	3	1000	1	3/0	4/0	2,4
1 4 10K				4					2,4
2 3 10	300	2	2"	3	1/0	4	1	2	2
2 4 10				4					2
2 3 20	350			3	2/0	3	1/0		2
2 4 20				4					2
2 3 30	400			3	3/0				2,4
2 4 30			2.5"	4					2,4
2 3 40	460			3	4/0	2	2/0	1/0	2,4
2 4 40				4					2,4
2 3 25	510			3	250	1	3/0		2,4
2 4 25			3"	4					2,4,8
2 3 3K	570			3	300				2,4,8
2 4 3K				4					2,4
2 3 35	620	2	3"	3	350	1/0	4/0	2/0	2,4
2 4 35				4					2,4,8
2 3 4K	670	2	3.5"	3	400	1/0	4/0	2/0	2,4
2 4 4K				4					2,4
2 3 5K	760		4"	3	500				2,4
2 4 5K				4					2,4
2 3 75	950			3	750			4/0	2,4
2 4 75				4					2,4
2 3 10K	1090		5"-CU 4"-AL	3	1000	2/0		250	2,4
2 4 10K			5"	4					2,4
3 3 10	450	3	2"	3	1/0	2	1/0	2	2,4
3 4 10				4					2,4
3 3 20	525			3	2/0	1	2/0	1/0	2,4
3 4 20				4					2,4
3 3 30	600			3	3/0		3/0		2,4
3 4 30			2.5"	4					2,4
3 3 40	690			3	4/0	1/0	4/0	2/0	2,4
3 4 40				4					2,4
3 3 25	765			3	250				2,4
3 4 25			3"	4					2,4,8
3 3 3K	855			3	300				2,4,8
3 4 3K				4					2,4
3 3 35	930			3	350			3/0	2,4
3 4 35				4					2,4,8
3 3 4K	1005		3.5"	3	400	2/0			4
3 4 4K				4					4
3 3 5K	1140		4"	3	500			4/0	4
3 4 5K				4					4
4 3 10	600	4	2"	3	1/0	1	1/0	1/0	4
4 4 10				4					4
4 3 20	700			3	2/0	1/0	2/0		4
4 4 20				4					4
4 3 30	800			3	3/0		3/0	2/0	4
4 4 30			2.5"	4					4
4 3 40	920			3	4/0		4/0		4
4 4 40				4					4
4 3 25	1020			3	250	2/0			4
4 4 25			3"	4					4,8
4 3 3K	1140			3	300			3/0	4,8
4 4 3K				4					4
4 3 35	1240			3	350	3/0		4/0	4
4 4 35				4					4,8
4 3 4K	1340		3.5"	3	400				4
4 4 4K				4					4
4 3 5K	1520		4"	3	500			250	4
4 4 5K				4					4
4 3 6K	1680			3	600	4/0			4
4 4 6K				4					4
5 3 4K	1675	5		3	400		250		4
5 4 4K				4					4
6 3 4K	2010	6		3		250		300	4
6 4 4K				4					4
7 3 5K	2660	7		3	500	350	350	500	4
7 4 5K				4					4
8 3 5K	3040	8		3	400	400	500		4
8 4 5K				4					4
11 3 5K	4180	11		3	500	500	600	750	4
11 4 5K				4					4

CONDUIT AND CONDUCTOR SCHEDULE NOTES

1. CONDUCTORS SHOWN ARE SHOWN FOR EACH CONDUIT WITH MODIFICATIONS AS NOTED IN NOTE #5. ALL CONDUCTORS SHOWN ARE THWN FOR CU OR THWN OR XHHW FOR AL UNLESS OTHERWISE NOTED.
2. PROVIDE EQUIPMENT GROUNDING CONDUCTORS PER NEC TABLE 250-122 WHEN CIRCUIT BREAKERS ARE SIZED GREATER THAN AMPERE RATING SHOWN IN TABLE.
3. PROVIDE #10 NEUTRALS FOR MULTIWIRE BRANCH CIRCUITS SERVING COMPUTERS.
4. GROUND (G) CONDUCTOR MAY BE DELETED ON SERVICE ENTRANCE CONDUCTORS.
5. SYMBOL SUBSCRIPTS:
   - "IG": INCLUDE IG (INSULATED/ISOLATED GROUND CONDUCTOR) SCHEDULED ALONG WITH THE GROUND OF EQUIPMENT GROUND CONDUCTOR.
   - "SE": SUBSTITUTE "SE" CONDUCTOR FOR "G" CONDUCTOR SHOWN, WHICH IS SIZED FOR THE GROUNDING OF THE SECONDARY OF THE SEPARATELY DERIVED SYSTEM.
   - "2N": INCLUDE TWO NEUTRAL CONDUCTORS, SIZED AS SCHEDULED FOR PHASED AND NEUTRAL CONDUCTORS.
   - "R": RACEWAY ONLY. CONDUCTORS PROVIDED BY UTILITY.
   - "V(#)": PHASE AND NEUTRAL CONDUCTORS UPSIZED FOR VOLTAGE DROP. UPSIZE GROUNDING CONDUCTOR(G) TO SIZE INDICATED BY (#) PER NEC 250.122(B).
   - "A": ALUMINUM CONDUCTORS ALLOWED FOR FEEDER INDICATED. ALUMINUM CONDUCTORS ARE NOT TO BE USED FOR CONNECTIONS TO MOTORS OR MOTOR DRIVEN EQUIPMENT.
6. A FULL SIZE GROUNDING CONDUCTOR (SE OR G AND/OR IG) SHALL BE INSTALLED IN EACH RACEWAY OR CABLE FOR PARALLELED CIRCUITS.
7. GROUNDING CONDUCTORS (G, IG, AND SE) SHALL BE OF THE SAME CONDUCTOR MATERIAL AS THE CORRESPONDING PHASE CONDUCTORS TO KEEP TABLE CALCULATIONS IN 7 . ACCORDANCE WITH NEC REQUIREMENTS.
8. INCREASE CONDUIT TO NEXT LARGEST STANDARD CONDUIT SIZE WHEN IG IS USED.

* -CONDUIT SIZED FOR COMPACT ALUMINUM CONDUCTORS. USE COPPER CONDUIT SIZE FOR STANDARD SIZE CONDUCTORS

SHEET KEYED NOTES

1. NEW GROUND SLEEVE INTERCEPTS EXISTING PRIMARY LINE. GROUND SLEEVE TO BE INSTALLED BY UTILITY. COORDINATE CONDUIT STUB-OUT FOR NEW TRANSFORMER WITH UTILITY.
2. PRIMARY AND SECONDARY CONDUIT, TRENCHING, BACKFILL, AND SECONDARY CONDUCTORS BY CONTRACTOR. PRIMARY CONDUCTORS BY UTILITY.
3. EQUIPMENT PAD BY CONTRACTOR PER UTILITY REQUIREMENTS. EQUIPMENT BY UTILITY.
4. ALTERNATE CONFIGURATIONS OF PARALLEL FEEDERS CAN BE USED WITH ENGINEER'S, PRIOR WRITTEN APPROVAL.
5. PROVIDE CONTROL CABLING IN 1.25" CONDUIT FROM ATS TO GENERATOR AND DOCKING STATION PER GENERATOR'S SHOP DRAWINGS.
6. FIELD VERIFY EQUIPMENT NAMEPLATE WITH EQUIPMENT SUBMITTALS PRIOR TO RELEASING BREAKERS. ADJUST BREAKER SIZES PER EQUIPMENT NAMEPLATE REQUIREMENTS.
7. LOCATE A DISCONNECT WITHIN 10' OF TRANSFORMER. WHERE PANELS CANNOT BE LOCATED IN COMPLIANCE WITH NEC 240.21(B)(3) AND 240.21(C)(3).
8. EQUIPMENT TO BE DETERMINED. ELECTRICAL DISCONNECT TO BE FURNISHED BY ELECTRICAL CONTRACTOR. OMIT WHERE EQUIPMENT COMES WITH FACTORY DISCONNECT. VERIFY NAMEPLATE INFORMATION PRIOR TO ORDERING AND NOTIFY ENGINEER OF DISCREPANCY.
9. LOCATE GENERATOR ANNUNCIATOR IN ELECTRICAL ROOM. PROVIDE CABLING IN 1" CONDUIT PER GENERATOR SHOP DRAWINGS.
10. REPLACE EXISTING HATCHERY BLDG SERVICE WITH NEW SERVICE. COORDINATE SHUTDOWN WITH FISH HATCHERY A MINIMUM OF TWO WEEKS PRIOR TO SHUTDOWN. SHUTDOWN TO BE DURING OWNERS NON-WORKING HOURS GENERALLY INTERPRETED AS HOLIDAYS, NIGHTS OR WEEKENDS AS COORDINATED WITH OWNER. REMOVE EXISTING SERVICE AFTER NEW SERVICE IS OPERATIONAL AND PANEL P1 HAS BEEN SWITCHED OVER TO NEW SERVICE.
11. REFEED EXISTING PANEL FROM NEW SERVICE. VERIFY PHASE ROTATION PRIOR TO SWITCHOVER.
12. PROVIDE CURRENT LIMITING BREAKER TO LIMIT LET THROUGH CURRENT TO 10KAIC. CONTRACTOR MAY OPT, AT CONTRACTOR'S OWN RISK, TO ELIMINATE MAIN CIRCUIT BREAKER AND RE-USE HATCHERY'S FUSED 400A SERVICE DISCONNECT WITH NEW 400A CURRENT LIMITING FUSES.
13. PROVIDE NEW DOCKING STATION FOR OPTIONAL STANDBY EMERGENCY SYSTEM (TRYSTAR TMTSS-045W-LLM-ACD OR EQUIVALENT).
14. PROVIDE NEW DOCKING STATION FOR LIFE SAFTEY EMERGENCY SYSTEM (TRYSTAR TMTS3-015W-LLM-A WITH 60A BREAKER OR EQUIVALENT) FOR GENERATOR TO COMPLY WITH NEC 700.3 (F).
15. SUSPEND TRANSFORMER ABOVE PANEL AS HIGH AS POSSIBLE WITHOUT EXCEEDING SECONDARY CONDUCTOR 10' LENGTH LIMITATION. PROVIDE WALL MOUNT BRACKET FOR STABILIZING TO STRUCTURE. SUPPORT WEIGHT FROM STRUCTURE STEEL WITH (4)3/4" RODS AND UL LISTED SUPPORTS.
16. PROVIDE 24"X36"X36", OPEN BOTTOM, IN-GRADE, ANSI TIER 15 PRECAST CONCRETE PULL BOX (QUAZITE OR EQUIVALENT). FIELD VERIFY WITH UTILITY DRAWINGS PRIOR TO ORDERING. NOTIFY ENGINEER OF DISCREPANCY.

GENERAL SHEET NOTES

1. COMPLY WITH POWER UTILITY'S REQUIREMENTS FOR ALL UTILITY RELATED INSTALLATIONS. REVIEW CURRENT UTILITY STANDARDS MANUAL PRIOR TO BID. NOTIFY ENGINEER OF CONFLICTS PRIOR TO BID.
2. AIC RATINGS SHOWN INDICATE MINIMUM REQUIRED VALUES. USE MANUFACTURER'S NEXT STANDARD RATING WHICH MEETS OR EXCEEDS VALUE SHOWN.
3. ALL CONDUCTORS ARE CONSIDERED TO BE COPPER UNLESS SPECIFICALLY NOTED OTHERWISE.
4. A FULL SIZE EQUIPMENT GROUNDING CONDUCTOR SIZED FOR THE OVERCURRENT PROTECTIVE DEVICE PROTECTING THE CIRCUIT IS REQUIRED IN EACH RACEWAY OR CABLE FOR PARALLELED CIRCUITS.
5. CONTRACTOR SHALL DOCUMENT FEEDER CONDUCTOR LENGTH ON FIELD REDLINE SET.
6. FIELD MARK SERVICE EQUIPMENT WITH AVAILABLE FAULT CURRENT AND CALCULATION DATE PER NEC 110.24(A).
7. ALL SERVICE ENTRANCE EQUIPMENT (PANELBOARDS, SWITCHBOARDS, ATS, ETC.) SHALL BE UL LISTED FOR USE AS SERVICE ENTRANCE EQUIPMENT.
8. FIELD MARK ALL SERVICE EQUIPMENT WITH REQUIRED BREAKER CLEARING TIME. CONTRACTOR VERIFY WITH MANUFACTURER'S PUBLISHED DATA FOR MAIN BREAKER.
9. ALL EQUIPMENT MAY BE SERIES-RATED FOR SHORT CIRCUIT (FAULT) CAPACITY. PROVIDE LABELING FOR SERIES RATED SYSTEMS PER NEC 110.22(C).
10. BOND BUILDING STRUCTURAL STEEL, METALLIC WATER PIPES, AND CONCRETE-ENCASED ELECTRODES (REBAR) TO EACH OTHER AND TO THE ENCLOSURE GROUNDING BUS INSIDE THE ENCLOSURE CONTAINING THE SERVICE DISCONNECT SWITCH. THE CONCRETE INSTALLATION CONTRACTOR SHALL BE INSTRUCTED TO LEAVE AT LEAST 1 FT. OF REBAR EXPOSED AT THE SERVICE ENTRANCE PANEL FOR BONDING.
11. ALL BONDING SHALL BE EFFECTED BY MEANS OF UL LISTED DEVICES SPECIFICALLY TESTED AND APPROVED FOR THE PURPOSE.
12. ALL METALLIC CONDUIT JOINTS SHALL BE MADE UP WRENCH-TIGHT USING UL APPROVED DEVICES. IN ADDITION, ALL CONDUITS, METALLIC AND NON-METALLIC, SHALL HAVE A BONDING CONDUCTOR INSTALLED IN ACCORDANCE WITH EITHER NEC 250.66 OR 250.122 AS APPLICABLE.

1 ELECTRICAL ONE-LINE DIAGRAM
Scale: N. T. S.

REVIEWED FOR CODE COMPLIANCE
Thomas W Peterson
12/14/2023
DIVISION OF FACILITIES CONSTRUCTION AND MANAGEMENT
DFCM CODE COMPLIANCE OFFICER

PUBLISHED		
NO.	REVISIONS	DATE

This document or any part therof in detail or design concept is the property of Forsgren Associates Inc. and shall not be copied without the written authroization of Forsgren Associates Inc.

DRAWN DDS
DESIGNED ECR
APPROVED ECR
QA ECR

ATTENTION
LINE IS 2-INCHES AT 24"x36" SIZE
IF NOT 2-INCHES, SCALE DRAWINGS ACCORDINGLY

REGISTERED PROFESSIONAL ENGINEER No. 6813611 ERIC C. RASMUSSEN 10/9/2023 STATE OF UTAH

LOGAN FISH HATCHERY
UTAH DIVISION OF WILDLIFE RESOURCES
1465 WEST 200 NORTH
LOGAN, UTAH 84321

UTAH DNR WILDLIFE RESOURCES

SINE SOURCE ENGINEERING
95 West Golf Course Road*Suite 102*Logan, UT 84321
Office: (435) 787-1445*Fax: 877-207-3199*www.sinesource.net

design west | architects
255 SOUTH 300 WEST
LOGAN, UT 84321

WARM WATER AQUACULTURE BUILDING
LOGAN HATCHERY IMPROVEMENT PROJECT
ELECTRICAL ONE-LINE DIAGRAM

PROJECT NO: 822249
SHEET NO: EP103
DATE: 10-2023
PAGE NO: 49

PANEL P3

PANEL: P3 | TYPE: NQ | 3 Ø | 4 WIRE | 120/240 VOLTS | LOCATION: ELEC ROOM | MOUNTING: X SURFACE (FLUSH not marked)

X NEW / EXISTING / 1 NEMA RATING / BOLT ON BREAKERS / ISOLATED GROUND BUS / SURGE PROTECT (SPD)

225 AMP MAIN / LUGS / 225 BREAKER

REMARKS: -PROVIDE WARNING SIGN INDICATING PANEL CONTAINS A HIGH LEG AND LAND HIGH LEG ON PHASE "B"
*PROCESS EQUIPMENT: REFER TO PROCESS DRAWINGS FOR INSTALLATION REQUIREMENTS INCLUDING CIRCUITING, CONTROL CONDUCTORS, LOCATION, DISCONNECT, ETC TO BE COMPLETED BY ELECTRICIAN AS PART OF ELECTRICAL BID

No.	BRKR A	BRKR P	CIRCUIT DESCRIPTION	L	O	M	WIRE/CND PH	N	G	C	CIRC. LOAD	A	B	C	CIRC. LOAD	WIRE/CND PH	N	G	C	L	O	M	CIRCUIT DESCRIPTION	BRKR A	BRKR P	No.
1	20	2	UV TREATMENT*				12S	12S	12S	3/4S	1750	1750											SPARE	20	1	2
3	-	-	-				12S				1750		1750										SPARE	20	1	4
5	50	2	RV PEDESTAL				6	6	10	1.25	5000			10000	5000	6	6	10	1.25				RV PEDESTAL	50	2	6
7	-	-	-				6				5000	10000			5000	6							-	-	-	8
9	30	2	CONDENSING UNIT CU-1				10	10	10	3/4	2280		4030		1750	12S	12S	12S	3/4S				UV TREATMENT*	20	2	10
11	-	-	-				10				2280			4030	1750	12S							-	-	-	12
13	30	2	CONDENSING UNIT CU-2				10	10	10	3/4	2280	4930			2650	10	10	10	3/4				UV TREATMENT*	30	2	14
15	-	-	-				10				2280		4930		2650	10							-	-	-	16
17	30	2	CONDENSING UNIT CU-3				10	10	10	3/4	2280			2280									SPARE	20	1	18
19	-	-	-				10				2280	2280											SPARE	20	1	20
21	30	2	CONDENSING UNIT CU-4				10	10	10	3/4	2280		2280										SPARE	20	1	22
23	-	-	-				10				2280			2280									SPARE	20	1	24
25	30	2	CONDENSING UNIT CU-5				10	10	10	3/4	2280	2280											SPARE	20	1	26
27	-	-	-				10				2280		2280										SPARE	20	1	28
29	20	1	SPARE											0									SPARE	20	1	30
31	20	1	SPARE									0											SPARE	20	1	32
33	20	1	SPARE										0										SPARE	20	1	34
35	20	1	SPARE											0									SPARE	20	1	36
37	20	1	RM 110 ELECTRIC WALL HEATER				12S	12S	12S	3/4S	1008	1008											SPARE	20	1	38
39	20	1	SPARE										0										SPARE	20	1	40
41	20	1	SPARE											1008	1008	12S	12S	12S	3/4S				RM 112 ELECTRIC WALL HEATER	20	1	42
											TOTALS	22248	15270	19598												

FEEDER: SEE ONE-LINE | AMPS/PHASE: 185 127 163 | AIC: 10000 | SCCR: 10000 | PARALLEL RUNS: SEE ONE-LINE

BREAKER CODES
A=ARC-FAULT; G=GROUND FAULT; H=HACR; L=LOCKING HANDLE; S=SHUNT TRIP; R=RED PAINTED HANDLE
WIRE CODES
I=ADD'L ISO GROUND TO MATCH SAFETY GROUND; S=UNLESS OTHERWISE SPECIFIED
GENERAL CODES
1LIN=SEE ONE-LINE DIAGRAM

PANEL HATCHERY MDP*

PANEL: HATCHERY MDP* | TYPE: ILINE | 3 Ø | 4 WIRE | 120/208 VOLTS | LOCATION: EXTERIOR | MOUNTING: X SURFACE (FLUSH not marked)

X NEW / EXISTING / 3R NEMA RATING / BOLT ON BREAKERS / ISOLATED GROUND BUS / 120KA SURGE PROTECT (SPD)

400 AMP MAIN / LUGS / 400*** BREAKER

REMARKS: *HATCHERY BUILDING MDP
**REFEED EXISTING PANEL FROM NEW SERVICE
***PROVIDE CURRENT LIMITING BREAKER

No.	BRKR A	BRKR P	CIRCUIT DESCRIPTION	L	O	M	WIRE/CND PH	N	G	C	CIRC. LOAD	A	B	C	CIRC. LOAD	WIRE/CND PH	N	G	C	L	O	M	CIRCUIT DESCRIPTION	BRKR A	BRKR P	No.
1	225	3	EXISTING PANEL A**				4/0	4/0	4	2.5	8333	13877			5544	4	4	8	1.25				15 HP PUMP P-1	70	3	2
3	-	-	-				4/0				8333		13877		5544	4							-	-	-	4
5	-	-	-				4/0				8333			13877	5544	4							-	-	-	6
7	90	3	20 HP PUMP P-3				3	3	8	1.25	7128	16038			8910	3	3	8	1.25				20 HP PUMP P-3	90	3	8
9	-	-	-				3				7128		16038		8910	3							-	-	-	10
11	-	-	-				3				7128			16038	8910	3							-	-	-	12
13	60	3	HYPERFUSION UNIT				4	4	10	1.25	5820	5820											SPARE	20	1	14
15	-	-	-				4				5820		5820										SPARE	20	1	16
17	-	-	-				4				5820			5820									SPARE	20	1	18
19	20	1	SPARE									0											SPARE	20	1	20
21	20	1	SPARE										0										SPARE	20	1	22
23	20	1	SPARE											0									SPARE	20	1	24
											TOTALS	35735	35735	35735												

FEEDER: SEE ONE-LINE | AMPS/PHASE: 298 298 298 | AIC: 30000 | SCCR: 30000 | PARALLEL RUNS: SEE ONE-LINE

BREAKER CODES
A=ARC-FAULT; G=GROUND FAULT; H=HACR; L=LOCKING HANDLE; S=SHUNT TRIP; R=RED PAINTED HANDLE
WIRE CODES
I=ADD'L ISO GROUND TO MATCH SAFETY GROUND; S=UNLESS OTHERWISE SPECIFIED
GENERAL CODES
1LIN=SEE ONE-LINE DIAGRAM

MECHANICAL EQUIPMENT SCHEDULE

SYM	DESCRIPTION	LOAD	VOLTS	PHASE	CONTROL CIRCUITS BY	* STARTER BY	SAFETY DISCONNECT BY	REMARKS
CF- 1	AIRMASTER	1/4HP	120	1	ELEC	ELEC	ELEC	TYPICAL, SEE DRAWINGS FOR COUNTS. PROVIDE WALL SWITCH LOCATED PER MECHANICAL DRAWINGS
CU/AC- 1	CONDENSOR UNIT AND AIR CONDITIONER	30MOCP	208	1	MECH	ELEC	ELEC	PROVIDE WIRING FROM OUTDOOR UNIT TO INDOOR UNIT PER MANUFACTURER'S REQUIREMENTS. PROVIDE CONTROL CONDUIT FROM INDOOR UNIT TO THERMOSTAT
CU/AC- 2	CONDENSOR UNIT AND AIR CONDITIONER	30MOCP	208	1	MECH	ELEC	ELEC	PROVIDE WIRING FROM OUTDOOR UNIT TO INDOOR UNIT PER MANUFACTURER'S REQUIREMENTS. PROVIDE CONTROL CONDUIT FROM INDOOR UNIT TO THERMOSTAT
CU/AC- 3	CONDENSOR UNIT AND AIR CONDITIONER	30MOCP	208	1	MECH	ELEC	ELEC	PROVIDE WIRING FROM OUTDOOR UNIT TO INDOOR UNIT PER MANUFACTURER'S REQUIREMENTS. PROVIDE CONTROL CONDUIT FROM INDOOR UNIT TO THERMOSTAT
CU/AC- 4	CONDENSOR UNIT AND AIR CONDITIONER	30MOCP	208	1	MECH	ELEC	ELEC	PROVIDE WIRING FROM OUTDOOR UNIT TO INDOOR UNIT PER MANUFACTURER'S REQUIREMENTS. PROVIDE CONTROL CONDUIT FROM INDOOR UNIT TO THERMOSTAT
CU/AC- 5	CONDENSOR UNIT AND AIR CONDITIONER	30MOCP	208	1	MECH	ELEC	ELEC	PROVIDE WIRING FROM OUTDOOR UNIT TO INDOOR UNIT PER MANUFACTURER'S REQUIREMENTS. PROVIDE CONTROL CONDUIT FROM INDOOR UNIT TO THERMOSTAT
EF- 1	EXHAUST FAN	1/4HP	120	1	MECH	MECH	MECH	PROVIDE CONTROL CONDUIT FROM EXHAUST FAN TO THERMOSTAT, HUMIDISTAT, AND/OR LOUVER PER MECHANICAL DRAWINGS
EF- 2	EXHAUST FAN	1/3HP	120	1	MECH	MECH	MECH	PROVIDE CONTROL CONDUIT FROM EXHAUST FAN TO THERMOSTAT, HUMIDISTAT, AND/OR LOUVER PER MECHANICAL DRAWINGS
EF- 3	EXHAUST FAN	1/4HP	120	1	MECH	MECH	MECH	PROVIDE CONTROL CONDUIT FROM EXHAUST FAN TO THERMOSTAT, HUMIDISTAT, AND/OR LOUVER PER MECHANICAL DRAWINGS
EF- 4	EXHAUST FAN	1/4HP	120	1	MECH	MECH	MECH	PROVIDE CONTROL CONDUIT FROM EXHAUST FAN TO THERMOSTAT, HUMIDISTAT, AND/OR LOUVER PER MECHANICAL DRAWINGS
EF- 5	EXHAUST FAN	1/6HP	120	1	MECH	MECH	MECH	PROVIDE CONTROL CONDUIT FROM EXHAUST FAN TO THERMOSTAT, HUMIDISTAT, AND/OR LOUVER PER MECHANICAL DRAWINGS
EF- 6	EXHAUST FAN	1/10HP	120	1	MECH	MECH	MECH	PROVIDE CONTROL CONDUIT FROM EXHAUST FAN TO THERMOSTAT, HUMIDISTAT, AND/OR LOUVER PER MECHANICAL DRAWINGS
EF- 7	EXHAUST FAN	1/6HP	120	1	MECH	MECH	MECH	PROVIDE CONTROL CONDUIT FROM EXHAUST FAN TO THERMOSTAT, HUMIDISTAT, AND/OR LOUVER PER MECHANICAL DRAWINGS
EF- 8	EXHAUST FAN	1/4HP	120	1	MECH	MECH	MECH	PROVIDE CONTROL CONDUIT FROM EXHAUST FAN TO THERMOSTAT, HUMIDISTAT, AND/OR LOUVER PER MECHANICAL DRAWINGS
EF- 9	EXHAUST FAN	1/4HP	120	1	MECH	MECH	MECH	PROVIDE CONTROL CONDUIT FROM EXHAUST FAN TO THERMOSTAT AND HUMIDISTAT PER MECHANICAL DRAWINGS
EF- 10	EXHAUST FAN	1/4HP	120	1	MECH	MECH	MECH	PROVIDE CONTROL CONDUIT FROM EXHAUST FAN TO THERMOSTAT, HUMIDISTAT, AND/OR LOUVER PER MECHANICAL DRAWINGS
EWH- 1	ELECTRIC WALL HEATER	8.4A	120	1	MECH	MECH	MECH	TYPICAL, SEE DRAWINGS FOR COUNTS.
HFU- 1	HYPER FUSION UNIT	48.3 FLA	208	3	ELEC	EQUIP	ELEC	EQUIP. LOCATED IN HATCHERY BUILDING AND IS TO BE DETERMINED. VERIFY NAMEPLATE INFORMATION PRIOR TO ROUGH-IN AND NOTIFY ENGINEER OF DISCREPANCY.
PUMP- 1	PUMP	15 HP	208	3	ELEC	EQUIP	ELECT	PUMP LOCATED IN HATCHERY BUILDING. VFD SUPPLIED BY PUMP SUPPLIER INSTALLED BY ELECT. PROVIDE 1" CONDUIT FROM VFD TO PUMP FOR CONTROL WIRING
PUMP- 2	PUMP	20 HP	208	3	ELEC	EQUIP	ELECT	PUMP LOCATED IN HATCHERY BUILDING. VFD SUPPLIED BY PUMP SUPPLIER INSTALLED BY ELECT. PROVIDE 1" CONDUIT FROM VFD TO PUMP FOR CONTROL WIRING
PUMP- 3	PUMP	20 HP	208	3	ELEC	EQUIP	ELECT	PUMP LOCATED IN HATCHERY BUILDING. VFD SUPPLIED BY PUMP SUPPLIER INSTALLED BY ELECT. PROVIDE 1" CONDUIT FROM VFD TO PUMP FOR CONTROL WIRING
UH- 1A	UNIT HEATER	2.4 FLA	120	1	MECH	MECH	MECH	PROVIDE CONTROL CONDUIT FROM UNIT HEATER TO THERMOSTAT PER MECHANICAL DRAWINGS
UH- 1B	UNIT HEATER	2.4 FLA	120	1	MECH	MECH	MECH	PROVIDE CONTROL CONDUIT FROM UNIT HEATER TO THERMOSTAT PER MECHANICAL DRAWINGS
UH- 2A	UNIT HEATER	4.3 FLA	120	1	MECH	MECH	MECH	PROVIDE CONTROL CONDUIT FROM UNIT HEATER TO THERMOSTAT PER MECHANICAL DRAWINGS
UH- 2B	UNIT HEATER	4.3 FLA	120	1	MECH	MECH	MECH	PROVIDE CONTROL CONDUIT FROM UNIT HEATER TO THERMOSTAT PER MECHANICAL DRAWINGS
UH- 3A	UNIT HEATER	2.4 FLA	120	1	MECH	MECH	MECH	PROVIDE CONTROL CONDUIT FROM UNIT HEATER TO THERMOSTAT PER MECHANICAL DRAWINGS
UH- 3B	UNIT HEATER	2.4 FLA	120	1	MECH	MECH	MECH	PROVIDE CONTROL CONDUIT FROM UNIT HEATER TO THERMOSTAT PER MECHANICAL DRAWINGS
UH- 4	UNIT HEATER	1.9 FLA	120	1	MECH	MECH	MECH	PROVIDE CONTROL CONDUIT FROM UNIT HEATER TO THERMOSTAT PER MECHANICAL DRAWINGS
UH- 5	UNIT HEATER	1.9 FLA	120	1	MECH	MECH	MECH	PROVIDE CONTROL CONDUIT FROM UNIT HEATER TO THERMOSTAT PER MECHANICAL DRAWINGS
UH- 6A	UNIT HEATER	1.9 FLA	120	1	MECH	MECH	MECH	PROVIDE CONTROL CONDUIT FROM UNIT HEATER TO THERMOSTAT PER MECHANICAL DRAWINGS
UH- 6B	UNIT HEATER	1.9 FLA	120	1	MECH	MECH	MECH	PROVIDE CONTROL CONDUIT FROM UNIT HEATER TO THERMOSTAT PER MECHANICAL DRAWINGS
UH- 7	UNIT HEATER	2.4 FLA	120	1	MECH	MECH	MECH	PROVIDE CONTROL CONDUIT FROM UNIT HEATER TO THERMOSTAT PER MECHANICAL DRAWINGS
UH- 8A	UNIT HEATER	3.7 FLA	120	1	MECH	MECH	MECH	PROVIDE CONTROL CONDUIT FROM UNIT HEATER TO THERMOSTAT PER MECHANICAL DRAWINGS
UH- 8B	UNIT HEATER	3.7 FLA	120	1	MECH	MECH	MECH	PROVIDE CONTROL CONDUIT FROM UNIT HEATER TO THERMOSTAT PER MECHANICAL DRAWINGS
WH- 1	WATER HEATER	20KW	277	1	MECH	MECH	ELEC	PROVIDE LOCAL DISCONNECT, OMIT WHERE EQUIPMENT COMES WITH INTEGRAL DISCONNECT
WH- 2	WATER HEATER	1.5KW	120	1	MECH	MECH	ELEC	PROVIDE LOCAL DISCONNECT, OMIT WHERE EQUIPMENT COMES WITH INTEGRAL DISCONNECT

PANEL LS

PANEL: LS | TYPE: NF | 3 Ø | 4 WIRE | 277/480 VOLTS | LOCATION: ELEC. RM | MOUNTING: X SURFACE (FLUSH not marked)

X NEW / EXISTING / 1 NEMA RATING / BOLT ON BREAKERS / ISOLATED GROUND BUS / SURGE PROTECT (SPD)

60 AMP MAIN / 60 LUGS / BREAKER

REMARKS: -LIFE SAFETY PANEL. ALL CIRCUITS FED FROM PANEL SHALL COMPLY WITH NEC 700.10

No.	BRKR A	BRKR P	CIRCUIT DESCRIPTION	L	O	M	WIRE/CND PH	N	G	C	CIRC. LOAD	A	B	C	CIRC. LOAD	WIRE/CND PH	N	G	C	L	O	M	CIRCUIT DESCRIPTION	BRKR A	BRKR P	No.
1	20	1	LTG: EXTERIOR	19			12S	12S	12S	3/4S	836	4520			3684	12S	12S	12S	3/4S	22			LTG: CULTURE TANK RM 101	20	1	2
3	20	1	SPARE										909		909	12S	12S	12S	3/4S	18			LTG: EQUIP. RM 102	20	1	4
5	20	1	LTG: CULTURE RM 115 HIGH BAY	10			12S	12S	12S	3/4S	1208			4892	3684	12S	12S	12S	3/4S	22			LTG: CULTURE TANK RM 103	20	1	6
7	20	1	LTG: CENTER BLDG	46			12S	12S	12S	3/4S	1720	2624			904	12S	12S	12S	3/4S	9			LTG: INCUBATION RM	20	1	8
9	20	1	LTG: INCUBATION RM	9			12S	12S	12S	3/4S	904		904										SPARE	20	1	10
11	20	1	SPARE											0									SPARE	20	1	12
13	20	1	SPARE									0											SPARE	20	1	14
15	20	1	SPARE										0										SPARE	20	1	16
17	20	1	SPARE											0									SPARE	20	1	18
19	20	1	SPARE									0											SPARE	20	1	20
21	20	1	SPARE										0										SPARE	20	1	22
23	20	1	SPARE											0									SPARE	20	1	24
											TOTALS	7144	1813	4892												

FEEDER: SEE ONE-LINE | AMPS/PHASE: 26 7 18 | AIC: 18000 | SCCR: 18000 | PARALLEL RUNS: SEE ONE-LINE

BREAKER CODES
A=ARC-FAULT; G=GROUND FAULT; H=HACR; L=LOCKING HANDLE; S=SHUNT TRIP; R=RED PAINTED HANDLE
WIRE CODES
I=ADD'L ISO GROUND TO MATCH SAFETY GROUND; S=UNLESS OTHERWISE SPECIFIED
GENERAL CODES
1LIN=SEE ONE-LINE DIAGRAM

PANEL P1

PANEL: P1 | TYPE: NQ | 3 Ø | 4 WIRE | 120/208 VOLTS | LOCATION: ELEC ROOM | MOUNTING: X SURFACE (FLUSH not marked)

X NEW / EXISTING / 1 NEMA RATING / BOLT ON BREAKERS / ISOLATED GROUND BUS / SURGE PROTECT (SPD)

225 AMP MAIN / LUGS / 225 BREAKER

REMARKS: *PROCESS EQUIPMENT: REFER TO PROCESS DRAWINGS FOR INSTALLATION REQUIREMENTS INCLUDING CIRCUITING, CONTROL CONDUCTORS, LOCATION, DISCONNECT, ETC TO BE COMPLETED BY ELECTRICIAN AS PART OF ELECTRICAL BID

No.	BRKR A	BRKR P	CIRCUIT DESCRIPTION	L	O	M	WIRE/CND PH	N	G	C	CIRC. LOAD	A	B	C	CIRC. LOAD	WIRE/CND PH	N	G	C	L	O	M	CIRCUIT DESCRIPTION	BRKR A	BRKR P	No.
1	20	1	LTG: CULTURE TANK RM 115	21			12S	12S	12S	3/4S	294	1374			1080	12S	12S	12S	3/4S		6		PLUGS: CULTURE TANK RM 115	20	1	2
3	20	1	SPARE										1080		1080	12S	12S	12S	3/4S		6		PLUGS: CULTURE TANK RM 115	20	1	4
5	20	1	INCUBATION ROOM OUTLETS		8		12S	12S	12S	3/4S	1440			2880	1440	10	10	10	3/4S			1	OVERHEAD DOOR RM 115	20	1	6
7	20	1	SOUTH HALL OUTLETS		6		12S	12S	12S	3/4S	1080	2040			960	12S	12S	12S	3/4S			2	UNIT HEATER / FAN RM 115	20	1	8
9	20	1	SPARE										1200		1200	12S	12S	12S	3/4S			8	RM 115 SELF CLEANING TANKS*	20	1	10
11	20	1	SPARE											1560	1560	10	10	10	3/4S			2	EXHAUST FANS RM 115	20	1	12
13	20	2	FUTURE OZONE								672	1632			960	12S	12S	12S	3/4S			2	UNIT HEATER / FAN RM 115	20	1	14
15	-	-	-								672		1680		1008	12S	12S	12S	3/4S			1	RM 114 ELECTRIC WALL HEATER	20	1	16
17	20	2	FUTURE OZONE								672			1272	600	12S	12S	12S	3/4S			2	UNIT HEATER 6A & 7	20	1	18
19	-	-	-								672	1860			1188	12S	12S	12S	3/4S			2	EXHAUST FANS 5, 6, 7	20	1	20
21	20	1	SPARE										960		960	12S	12S	12S	3/4S			2	UNIT HEATER / FAN RM 105	20	1	22
23	20	1	SPARE											0									SPARE	20	1	24
25	20	1	SPARE									360			360	12S	12S	12S	3/4S				PLC*	20	1	26
27	20	1	SPARE										0										SPARE	20	1	28
29	20	1	GENERATOR BATTERY				10	10	10	1	720			720									SPARE	20	1	30
31	20	2	GENERATOR BLOCK HEATER				10	10	10	1	1920	1920											SPARE	20	1	32
33	-	-	-				10				1920		1920										SPARE	20	1	34
35	20	1	RAS PUMP CONTROLLER*				12S	12S	12S	3/4S	360			720	360	12S	12S	12S	3/4S				MOD 3 FLOW METERS*	20	1	36
37	20	1	BOILER				12S	12S	12S	3/4S	1440	1800			360	12S	12S	12S	3/4S				INCUBATION FLOW METERS*	20	1	38
39	20	1	SPARE										0										SPARE	20	1	40
41	20	1	BOILER				12S	12S	12S	3/4S	1440			1440									SPARE	20	1	42
43	100	3	BOOSTER PUMP PACKAGE*				2	2	8	1.5	9360	9360											SPARE	20	1	44
45	-	-	-				2				9360		9360										SPARE	20	1	46
47	-	-	-				2				9360			9360									SPARE	20	1	48
49	20	1	SPARE									0											SPARE	20	1	50
51	20	1	SPARE										0										SPARE	20	1	52
53	20	1	SPARE											1000	1000	12S	12S	12S	3/4S				MOD 3 VALVE CONTROLER	20	1	54
											TOTALS	20346	16200	18952												

FEEDER: SEE ONE-LINE | AMPS/PHASE: 170 135 158 | AIC: 10000 | SCCR: 10000 | PARALLEL RUNS: SEE ONE-LINE

BREAKER CODES
A=ARC-FAULT; G=GROUND FAULT; H=HACR; L=LOCKING HANDLE; S=SHUNT TRIP; R=RED PAINTED HANDLE
WIRE CODES
I=ADD'L ISO GROUND TO MATCH SAFETY GROUND; S=UNLESS OTHERWISE SPECIFIED
GENERAL CODES
1LIN=SEE ONE-LINE DIAGRAM

PANEL P2

PANEL: P2 | TYPE: NQ | 3 Ø | 4 WIRE | 120/208 VOLTS | LOCATION: (blank) | MOUNTING: X FLUSH (SURFACE not marked)

X NEW / EXISTING / 3R NEMA RATING / BOLT ON BREAKERS / ISOLATED GROUND BUS / SURGE PROTECT (SPD)

225 AMP MAIN / LUGS / 225 BREAKER

REMARKS: *PROCESS EQUIPMENT: REFER TO PROCESS DRAWINGS FOR INSTALLATION REQUIREMENTS INCLUDING CIRCUITING, CONTROL CONDUCTORS, LOCATION, DISCONNECT, ETC TO BE COMPLETED BY ELECTRICIAN AS PART OF ELECTRICAL BID

No.	BRKR A	BRKR P	CIRCUIT DESCRIPTION	L	O	M	WIRE/CND PH	N	G	C	CIRC. LOAD	A	B	C	CIRC. LOAD	WIRE/CND PH	N	G	C	L	O	M	CIRCUIT DESCRIPTION	BRKR A	BRKR P	No.
1	20	1	MEZZANINE OUTLETS		5		12S	12S	12S	3/4S	900	1800			900	12S	12S	12S	3/4S		5		PLUGS: NORTH HALL	20	1	2
3	20	1	SPARE										1440		1440	12S	12S	12S	3/4S			1	OVERHEAD DOOR RM 101	20	1	4
5	20	1	SPARE											1440	1440	12S	12S	12S	3/4S		8		PLUGS: CULTURE TANK RM 101	20	1	6
7	20	1	PLUGS: BRINE SHRIMP		4		12S	12S	12S	3/4S	720	2160			1440	10	10	10	3/4S		8		PLUGS: CULTURE TANK RM 103	20	1	8
9	20	1	PLUGS: WET LAB		5		12S	12S	12S	3/4S	900		1800		900	10	10	10	3/4S		5		PLUGS: CULTURE TANK RM 103	20	1	10
11	20	1	PLUGS: WET LAB		5		12S	12S	12S	3/4S	900			2340	1440	12S	12S	12S	3/4S			1	OVERHEAD DOOR RM 103	20	1	12
13	20	1	UNIT HEATER / FAN 106			3	12S	12S	12S	3/4S	1440	2400			960	12S	12S	12S	3/4S			2	UNIT HEATER / FAN RM 103	20	1	14
15	20	1	PLC				12S	12S	12S	3/4S	360		1920		1560	12S	12S	12S	3/4S			2	EXHAUST FANS RM 103	20	1	16
17	20	2	FUTURE OZONE								672			852	180	12S	12S	12S	3/4S		1		RM 103 TABLE OUTLET	20	1	18
19	-	-	-								672	1872			1200	10	10	10	3/4S			2	UNIT HEATERS RM 102	20	1	20
21	20	2	FUTURE OZONE								672		1632		960	10	10	10	3/4S			2	UNIT HEATER / FAN RM 101*	20	1	22
23	-	-	-								672			1872	1200	12S	12S	12S	3/4S			8	SELF CLEANING TANKS RM 101*	20	1	24
25	20	1	SPARE									180			180	12S	12S	12S	3/4S		1		RM 101 TABLE OUTLET	20	1	26
27	20	1	SPARE										840		840	12S	12S	12S	3/4S			2	EXHAUST FANS RM 101	20	1	28
29	20	1	SPARE											960	960	12S	12S	12S	3/4S			2	UNIT HEATER / FAN RM 101	20	1	30
31	20	1	RAS PUMP CONTROLLER*				12S	12S	12S	3/4S	360	720			360	12S	12S	12S	3/4S				RAS PUMP CONTROLLER*	20	1	32
33	20	1	BOILER				12S	12S	12S	3/4S	1440		2880		1440	12S	12S	12S	3/4S				BOILER	20	1	34
35	20	1	SPARE											960	960	10	10	10	3/4S			2	UNIT HEATER / FAN RM 103	20	1	36
37	20	1	SPARE									1200			1200	12S	12S	12S	3/4S			8	SELF CLEANING TANKS RM 103*	20	1	38
39	20	1	SPARE										0										SPARE	20	1	40
41	20	1	BRINE SHRIMP WALL HEATER			1	12S	12S	12S	3/4S	1008			1368	360	12S	12S	12S	3/4S				MOD. 1 FLOW METERS*	20	1	42
43	20	1	SPARE									360			360	12S	12S	12S	3/4S				MOD. 2 FLOW METERS*	20	1	44
45	20	1	SPARE										0										SPARE	20	1	46
47	20	1	WET LAB WATER HEATER				12S	12S	12S	3/4S	1500			2500	1000	12S	12S	12S	3/4S				MOD 1 VALVE CONTROLER	20	1	48
49	20	1	SPARE									1000			1000	12S	12S	12S	3/4S				MOD 2 VALVE CONTROLER	20	1	50
51	20	1	SPARE										0										SPARE	20	1	52
53	20	1	SPARE											0									SPARE	20	1	54
											TOTALS	11692	10512	12292												

FEEDER: SEE ONE-LINE | AMPS/PHASE: 97 88 102 | AIC: 10000 | SCCR: 10000 | PARALLEL RUNS: SEE ONE-LINE

BREAKER CODES
A=ARC-FAULT; G=GROUND FAULT; H=HACR; L=LOCKING HANDLE; S=SHUNT TRIP; R=RED PAINTED HANDLE
WIRE CODES
I=ADD'L ISO GROUND TO MATCH SAFETY GROUND; S=UNLESS OTHERWISE SPECIFIED
GENERAL CODES
1LIN=SEE ONE-LINE DIAGRAM

PANEL MDP

PANEL: MDP | TYPE: NF | 3 Ø | 4 WIRE | 277/480 VOLTS | LOCATION: ELEC. RM | MOUNTING: X SURFACE (FLUSH not marked)

X NEW / EXISTING / 1 NEMA RATING / BOLT ON BREAKERS / ISOLATED GROUND BUS / 120KA SURGE PROTECT (SPD)

400 AMP MAIN / 400 LUGS / BREAKER

REMARKS: *PROCESS EQUIPMENT: REFER TO PROCESS DRAWINGS FOR INSTALLATION REQUIREMENTS INCLUDING CIRCUITING, CONTROL CONDUCTORS, LOCATION, DISCONNECT, ETC TO BE COMPLETED BY ELECTRICIAN AS PART OF ELECTRICAL BID

No.	BRKR A	BRKR P	CIRCUIT DESCRIPTION	L	O	M	WIRE/CND PH	N	G	C	CIRC. LOAD	A	B	C	CIRC. LOAD	WIRE/CND PH	N	G	C	L	O	M	CIRCUIT DESCRIPTION	BRKR A	BRKR P	No.
1	200	3	PANEL L1				3/0	3/0	6	2.5	31978	57732			25754	3/0	3/0	6	2.5				PANEL L2	200	3	2
3	-	-	-				3/0				31978		56552		24574	3/0							-	-	-	4
5	-	-	-				3/0				31978			58332	26354	3/0							-	-	-	6
7	100	3	PANEL P1				2	2	8	1.5	20346	27490			7144	4	4	10	1.25				PANEL LS	60	3	8
9	-	-	-				2				16200		18013		1813	4							-	-	-	10
11	-	-	-				2				18952			23844	4892	4							-	-	-	12
13	100	3	PANEL P3				2	2	8	1.5	22248	22248											SPARE	20	1	14
15	-	-	-				2				15270		35270		20000	2	2	8	1.5				WATER HEATER	100	1	16
17	-	-	-				2				19598			19598									SPARE	20	1	18
19	20	1	SPARE									0											SPARE	20	1	20
21	20	1	SPARE										0										SPARE	20	1	22
23	20	1	SPARE											0									SPARE	20	1	24
											TOTALS	107470	109835	101774												

FEEDER: SEE ONE-LINE | AMPS/PHASE: 388 397 367 | AIC: 18000 | SCCR: 18000 | PARALLEL RUNS: SEE ONE-LINE

BREAKER CODES
A=ARC-FAULT; G=GROUND FAULT; H=HACR; L=LOCKING HANDLE; S=SHUNT TRIP; R=RED PAINTED HANDLE
WIRE CODES
I=ADD'L ISO GROUND TO MATCH SAFETY GROUND; S=UNLESS OTHERWISE SPECIFIED
GENERAL CODES
1LIN=SEE ONE-LINE DIAGRAM

PANEL L1

PANEL: L1 | TYPE: NF | 3 Ø | 4 WIRE | 277/480 VOLTS | LOCATION: ELEC. RM | MOUNTING: X SURFACE (FLUSH not marked)

X NEW / EXISTING / 1 NEMA RATING / BOLT ON BREAKERS / ISOLATED GROUND BUS / SURGE PROTECT (SPD)

200 AMP MAIN / 200 LUGS / BREAKER

REMARKS: *PROCESS EQUIPMENT: REFER TO PROCESS DRAWINGS FOR INSTALLATION REQUIREMENTS INCLUDING CIRCUITING, CONTROL CONDUCTORS, LOCATION, DISCONNECT, ETC TO BE COMPLETED BY ELECTRICIAN AS PART OF ELECTRICAL BID

No.	BRKR A	BRKR P	CIRCUIT DESCRIPTION	L	O	M	WIRE/CND PH	N	G	C	CIRC. LOAD	A	B	C	CIRC. LOAD	WIRE/CND PH	N	G	C	L	O	M	CIRCUIT DESCRIPTION	BRKR A	BRKR P	No.
1	20	3	DRUM FILTER*				12S	12S	12S	3/4S	942	3992			3050	12S	12S	12S	3/4S				PUMP - MODULE 3 RAS*	20	3	2
3	-	-	-				12S				942		3992		3050	12S							-	-	-	4
5	-	-	-				12S				942			3992	3050	12S							-	-	-	6
7	20	1	SPARE									3050			3050	12S	12S	12S	3/4S				PUMP - MODULE 3 RAS*	20	3	8
9	20	1	SPARE										3050		3050	12S							-	-	-	10
11	20	1	SPARE											3050	3050	12S							-	-	-	12
13	20	1	SPARE									3050			3050	12S	12S	12S	3/4S				PUMP - MODULE 3 RAS*	20	3	14
15	20	1	SPARE										3050		3050	12S							-	-	-	16
17	20	1	SPARE											3050	3050	12S							-	-	-	18
19	20	1	SPARE									0											SPARE	20	1	20
21	20	1	SPARE										0										SPARE	20	1	22
23	20	1	SPARE											0									SPARE	20	1	24
25	20	1	SPARE									0											SPARE	20	1	26
27	20	1	SPARE										0										SPARE	20	1	28
29	20	1	SPARE											0									SPARE	20	1	30
31	35	3	CHILLER*				8	8	10	1	7479	10529			3050	12S	12S	12S	3/4S				OXYGENATOR BLOWER MOD 3*	20	3	32
33	-	-	-				8				7479		10529		3050	12S							-	-	-	34
35	-	-	-				8				7479			10529	3050	12S							-	-	-	36
37	35	3	CHILLER*				8	8	10	1	7479	11357			3878	10	10	10	3/4				OXYGEN. BLOWER INCUBATION*	30	3	38
39	-	-	-				8				7479		11357		3878	10							-	-	-	40
41	-	-	-				8				7479			11357	3878	10							-	-	-	42
											TOTALS	31978	31978	31978												

FEEDER: SEE ONE-LINE | AMPS/PHASE: 115 115 115 | AIC: 18000 | SCCR: 18000 | PARALLEL RUNS: SEE ONE-LINE

BREAKER CODES
A=ARC-FAULT; G=GROUND FAULT; H=HACR; L=LOCKING HANDLE; S=SHUNT TRIP; R=RED PAINTED HANDLE
WIRE CODES
I=ADD'L ISO GROUND TO MATCH SAFETY GROUND; S=UNLESS OTHERWISE SPECIFIED
GENERAL CODES
1LIN=SEE ONE-LINE DIAGRAM

PANEL L2

PANEL: L2 | TYPE: NF | 3 Ø | 4 WIRE | 277/480 VOLTS | LOCATION: HALLWAY | MOUNTING: X SURFACE (FLUSH not marked)

X NEW / EXISTING / 3R NEMA RATING / BOLT ON BREAKERS / ISOLATED GROUND BUS / SURGE PROTECT (SPD)

200 AMP MAIN / 200 LUGS / BREAKER

REMARKS: *PROCESS EQUIPMENT: REFER TO PROCESS DRAWINGS FOR INSTALLATION REQUIREMENTS INCLUDING CIRCUITING, CONTROL CONDUCTORS, LOCATION, DISCONNECT, ETC TO BE COMPLETED BY ELECTRICIAN AS PART OF ELECTRICAL BID

No.	BRKR A	BRKR P	CIRCUIT DESCRIPTION	L	O	M	WIRE/CND PH	N	G	C	CIRC. LOAD	A	B	C	CIRC. LOAD	WIRE/CND PH	N	G	C	L	O	M	CIRCUIT DESCRIPTION	BRKR A	BRKR P	No.
1	20	3	DRUM FILTER*				12S	12S	12S	3/4S	942	2270			1328	12S	12S	12S	3/4S				PUMP - MODULE 1 RAS*	20	3	2
3	-	-	-				12S				942		2270		1328	12S							-	-	-	4
5	-	-	-				12S				942			2270	1328	12S							-	-	-	6
7	20	3	DRUM FILTER*				12S	12S	12S	3/4S	942	2270			1328	12S	12S	12S	3/4S				PUMP - MODULE 1 RAS*	20	3	8
9	-	-	-				12S				942		2270		1328	12S							-	-	-	10
11	-	-	-				12S				942			2270	1328	12S							-	-	-	12
13	20	3	OXYGENATOR BLOWER MOD 1*				12S	12S	12S	3/4S	2105	3433			1328	12S	12S	12S	3/4S				PUMP - MODULE 1 RAS*	20	3	14
15	-	-	-				12S				2105		3433		1328	12S							-	-	-	16
17	-	-	-				12S				2105			3433	1328	12S							-	-	-	18
19	20	3	OXYGENATOR BLOWER MOD 2*				12S	12S	12S	3/4S	2105	3433			1328	12S	12S	12S	3/4S				PUMP - MODULE 2 RAS*	20	3	20
21	-	-	-				12S				2105		3433		1328	12S							-	-	-	22
23	-	-	-				12S				2105			3433	1328	12S							-	-	-	24
25	20	1	SPARE									1328			1328	12S	12S	12S	3/4S				PUMP - MODULE 2 RAS*	20	3	26
27	20	1	SPARE										1328		1328	12S							-	-	-	28
29	20	1	SPARE											1328	1328	12S							-	-	-	30
31	20	1	SPARE									1328			1328	12S	12S	12S	3/4S				PUMP - MODULE 2 RAS*	20	3	32
33	20	1	SPARE										1328		1328	12S							-	-	-	34
35	20	1	SPARE											1328	1328	12S							-	-	-	36
37	100	3	PANEL P2				2	2	8	1.5	11692	11692											SPARE	20	1	38
39	-	-	-				2				10512		10512										SPARE	20	1	40
41	-	-	-				2				12292			12292									SPARE	20	1	42
											TOTALS	25754	24574	26354												

FEEDER: SEE ONE-LINE | AMPS/PHASE: 93 89 95 | AIC: 10000 | SCCR: 10000 | PARALLEL RUNS: SEE ONE-LINE

BREAKER CODES
A=ARC-FAULT; G=GROUND FAULT; H=HACR; L=LOCKING HANDLE; S=SHUNT TRIP; R=RED PAINTED HANDLE
WIRE CODES
I=ADD'L ISO GROUND TO MATCH SAFETY GROUND; S=UNLESS OTHERWISE SPECIFIED
GENERAL CODES
1LIN=SEE ONE-LINE DIAGRAM

REVIEWED FOR CODE COMPLIANCE
Thomas W Peterson
12/14/2023
DIVISION OF FACILITIES CONSTRUCTION AND MANAGEMENT

DFCM CODE COMPLIANCE OFFICER

PUBLISHED		
NO.	REVISIONS	DATE

This document or any part therof in detail or design concept is the property of Forsgren Associates Inc. and shall not be copied without the written authroization of Forsgren Associates Inc.

DRAWN: DDS
DESIGNED: ECR
APPROVED: ECR
QA: ECR

ATTENTION
LINE IS 2-INCHES
AT 24"x36" SIZE
IF NOT 2-INCHES, SCALE DRAWINGS ACCORDINGLY

REGISTERED PROFESSIONAL ENGINEER
No. 6813611
ERIC C. RASMUSSEN
10/9/2023
STATE OF UTAH

LOGAN FISH HATCHERY
UTAH DIVISION OF WILDLIFE RESOURCES
1465 WEST 200 NORTH
LOGAN, UTAH 84321

UTAH DNR WILDLIFE RESOURCES

SINE SOURCE ENGINEERING
95 West Golf Course Road*Suite 102*Logan, UT 84321
Office: (435) 787-1445*Fax: 877-207-3199*www.sinesource.net

design west | architects
255 SOUTH 300 WEST
LOGAN, UT 84321

WARM WATER AQUACULTURE BUILDING
LOGAN HATCHERY IMPROVEMENT PROJECT
ELECTRICAL SCHEDULES

PROJECT NO: 822249
SHEET NO: EP104
DATE: 10-2023

DRAWING INDEX	
DRAWING NO.	DESCRIPTION
GENERAL	
G001	PROCESS DRAWING INDEX
G002	STANDARD ABBREVIATIONS
G003	STANDARD SYMBOLS
MECHANICAL	
PF001	PROCESS FLOW SCHEMATIC LEGEND AND ABBREVIATIONS
PF100	SYSTEM PROCESS FLOW SCHEMATIC
PF101	HYBRID STRIPED BASS MODULES 1 AND 2 HYDRAULIC GRADE LINE DIAGRAM
PF102	HYBRID STRIPED BASS RAS MODULE 1 AND 2 PROCESS FLOW SCHEMATIC
PF103	HYBRID STRIPED BASS RAS MODULE 1 & 2 TANK DETAIL PROCESS FLOW SCHEMATIC
PF104	WALLEYE RAS MODULE 3 HYDRAULIC GRADE LINE DIAGRAM
PF105	WALLEYE RAS MODULE 3 PROCESS FLOW SCHEMATIC
PF106	WALLEYE RAS MODULE 3 TANK DETAIL PROCESS FLOW SCHEMATIC
PF107	WALLEYE INCUBATION HYDRAULIC GRADE LINE DIAGRAM
PF108	INCUBATION PROCESS FLOW SCHEMATIC
PF109	INCUBATION MODULE TANK DETAIL PROCESS FLOW SCHEMATIC
GM001	PIPING SCHEDULE
GM002	MECHANICAL SCHEDULE 1
GM003	MECHANICAL SCHEDULE 2
GM004	MECHANICAL SCHEDULE 3
GM005	MECHANICAL SCHEDULE 4
GM006	MECHANICAL SCHEDULE 5
GM007	MECHANICAL SCHEDULE 6
GM008	STANDARD MECHANICAL DETAILS 1
GM009	STANDARD MECHANICAL DETAILS 2
M001	MECHANICAL GENERAL LAYOUT
M101	HATCHERY BUILDING MODULE 1 RAS SUPPLY PIPING PLAN
M102	HATCHERY BUILDING MODULE 1 RAS RETURN PIPING PLAN
M103	HATCHERY BUILDING MODULE 2 RAS SUPPLY PIPING PLAN
M104	HATCHERY BUILDING MODULE 2 RAS RETURN PIPING PLAN
M105	HATCHERY BUILDING MODULE 1 AND 2 SECTIONS AND DETAILS 1
M106	HATCHERY BUILDING MODULE 1 AND 2 SECTIONS AND DETAIL 2
M107	HATCHERY BUILDING MODULE 1 AND 2 SECTIONS AND DETAILS 3
M108	HATCHERY BUILDING MODULE 1 AND 2 SECTIONS AND DETAILS 4
M109	HATCHERY BUILDING MODULE 1 AND 2 SECTIONS AND DETAILS 5
M110	HATCHERY BUILDING RAS SUPPLY SYSTEM SECTION AND DETAILS 6
M111	HATCHERY BUILDING MODULE 1 AND 2 SECTIONS AND DETAILS 7
M112	HATCHERY BUILDING MODULE 3 RAS SUPPLY PIPING PLAN
M113	HATCHERY BUILDING MODULE 3 RAS RETURN PIPING PLAN
M114	HATCHERY BUILDING MODULE 3 SECTIONS AND DETAIL 1
M115	HATCHERY BUILDING MODULE 3 SECTIONS AND DETAILS 2
M116	HATCHERY BUILDING MODULE 3 SECTIONS AND DETAIL 3
M117	HATCHERY BUILDING MODULE 3 SECTIONS AND DETAIL 4
M118	HATCHERY BUILDING MODULE 3 SECTIONS AND DETAILS 5
M119	HATCHERY BUILDING MODULE 3 SECTIONS AND DETAIL 6
M120	HATCHERY BUILDING MODULE 3 SECTIONS AND DETAILS 7
M200	HATCHERY BUILDING INCUBATION SUPPLY PIPING PLAN
M201	HATCHERY BUILDING INCUBATION DRAIN PIPING PLAN
M202	HATCHERY BUILDING INCUBATION SECTIONS AND DETAILS 1
M203	HATCHERY BUILDING INCUBATION ENLARGED PLAN
M204	HATCHERY BUILDING INCUBATION BOOSTER PUMP SECTIONS AND DETAILS 1
M205	HATCHERY BUILDING INCUBATION PIPING SECTIONS AND DETAILS
M206	HATCHERY BUILDING INCUBATION RACK PLAN AND ELEVATION
M207	HATCHERY BUILDING INCUBATION RACK ASSEMBLY SECTION AND DETAILS 1
M208	HATCHERY BUILDING INCUBATION RACK SECTIONS AND DETAILS 2
M209	HATCHERY BUILDING FORMALIN DISTRIBUTION SYSTEM SECTIONS AND DETAILS 1
M300	HATCHERY BUILDING REARING TANK PLAN, SECTIONS AND DETAILS
M301	HATCHERY BUILDING REARING TANKS SECTIONS AND DETAILS

DRAWING INDEX	
DRAWING NO.	DESCRIPTION
ELECTRICAL	
GE001	STANDARD ELECTRICAL ABBREVIATIONS AND DEVICE INDEXES
GE002	ELECTRICAL STANDARD SYMBOLS 1
GE003	ELECTRICAL STANDARD SYMBOLS 2
GE004	ELECTRICAL EQUIPMENT SCHEDULE
GE005	LUMINAIRE SCHEDULE
GE006	INSTRUMENTATION LIST
GE007	CABLE SCHEDULE 1
GE008	CABLE SCHEDULE 2
GE009	CONDUIT SCHEDULE
GE010	ELECTRICAL STANDARD DETAILS
E100	HATCHERY BUILDING ELECTRICAL KEY PLAN
E101	HATCHERY BUILDING MODULE 1 RAS ELECTRICAL PLAN
E102	HATCHERY BUILDING MODULE 2 RAS ELECTRICAL PLAN
E103	HATCHERY BUILDING MODULE 3 RAS ELECTRICAL PLAN
E104	HATCHERY BUILDING MODULE 1 RAS AREA LIGHTING PLAN
E105	HATCHERY BUILDING MODULE 2 RAS AREA LIGHTING PLAN
E106	HATCHERY BUILDING MODULE 3 RAS AREA LIGHTING PLAN
E107	HATCHERY BUILDING MODULE 1 RAS TANK LIGHTING PLAN
E108	HATCHERY BUILDING MODULE 2 RAS TANK LIGHTING PLAN
E109	HATCHERY BUILDING MODULE 3 RAS TANK LIGHTING PLAN
E120	HATCHERY BUILDING CABLE TRAY LAYOUT
E200	HATCHERY BUILDING INCUBATION ELECTRICAL PLAN
E201	HATCHERY BUILDING INCUBATION AREA LIGHTING PLAN
E300	SCADA BLOCK DIAGRAM
E301	MASTER PLC I/O PANEL LAYOUT
E302	MASTER PLC I/O BILL OF MATERIALS
E303	MASTER PLC I/O PANEL 24VDC POWER DISTRIBUTION
E304	MASTER PLC I/O SCHEMATIC DISCRETE INPUT 1
E305	MASTER PLC I/O SCHEMATIC DISCRETE INPUT 2
E306	MASTER PLC I/O SCHEMATIC DISCRETE INPUT 3
E307	MASTER PLC I/O SCHEMATIC DISCRETE OUTPUT
E308	MASTER PLC I/O SCHEMATIC ANALOG INPUT 1 & 2
E309	MASTER PLC I/O SCHEMATIC ANALOG INPUT 3 & 4
E310	MASTER PLC I/O SCHEMATIC ANALOG OUTPUT
E311	MASTER PLC I/O MISCELLANEOUS 24VDC POWER
E320	REMOTE I/O PANEL LAYOUT
E321	REMOTE I/O BILL OF MATERIALS
E322	REMOTE I/O PANEL 24VDC POWER DISTRIBUTION
E323	REMOTE I/O SCHEMATIC DISCRETE INPUT 1
E324	REMOTE I/O SCHEMATIC DISCRETE INPUT 2
E325	REMOTE I/O SCHEMATIC DISCRETE INPUT 3
E326	REMOTE I/O SCHEMATIC DISCRETE OUTPUT
E327	REMOTE I/O SCHEMATIC ANALOG INPUT 1 & 2
E328	REMOTE I/O SCHEMATIC ANALOG INPUT 3 & 4
E329	REMOTE I/O SCHEMATIC ANALOG INPUT 5
E330	REMOTE I/O SCHEMATIC ANALOG OUTPUT
E331	REMOTE I/O MISCELLANEOUS 24VDC POWER
E400	RAS PUMP CONTROL SCHEMATIC
E401	RAS PUMP CONTROL PANEL LAYOUT
INSTRUMENTATION	
GI001	INSTRUMENTATION LEGEND, SYMBOLS, AND ABBREVIATIONS
I101	HATCHERY BUILDING RAS MODULE 1 P&ID 1 AERATION TOWER AND REARING TANKS
I102	HATCHERY BUILDING RAS MODULE 1 P&ID 1 DRUM FILTERS, BIOFILTER, RAS PUMPING, AND UV
I103	HATCHERY BUILDING RAS MODULE 2 P&ID 1 AERATION TOWER AND REARING TANKS
I104	HATCHERY BUILDING RAS MODULE 2 P&ID 2 DRUM FILTERS, BIOFILTER, RAS PUMPING, AND UV
I105	HATCHERY BUILDING RAS MODULE 3 P&ID 1 AERATION TOWER AND REARING TANKS
I106	HATCHERY BUILDING RAS MODULE 3 P&ID 2 DRUM FILTER, BIOFILTER, RAS PUMPING, AND UV
I107	HATCHERY BUILDING INCUBATION P&ID

REVIEWED FOR CODE COMPLIANCE
Thomas W Peterson
12/1/2023
DIVISION OF FACILITIES CONSTRUCTION AND MANAGEMENT

DFCM CODE COMPLIANCE OFFICER

NO.	REVISIONS	BY	DATE
	PUBLISHED		
C	100% DESIGN REVIEW	JT	10/23
B	90% DESIGN REVIEW	JT	9/23
A	50% DESIGN REVIEW	JT	5/23

This document or any part thereof in detail or design concept is the property of Forsgren Associates Inc. and shall not be copied without the written authorization of Forsgren Associates Inc.

DRAWN DJ
DESIGNED MEC
APPROVED
QA MLL

ATTENTION
LINE IS 2-INCHES AT 24"x36" SIZE
IF NOT 2-INCHES, SCALE DRAWING ACCORDINGLY

PROFESSIONAL ENGINEER No. 13614104-2202 BRENT WELTON STATE OF UTAH
10/04/2023

FISHERIES EXPERIMENT STATION
UTAH DIVISION OF WILDLIFE RESOURCES
1465 WEST 200 NORTH
LOGAN, UTAH 84321

UTAH DNR WILDLIFE RESOURCES

McMillen

Blue Stakes of UTAH 811 Bluestakes.org

WARN WATER AQUACULTURE BUILDING
LOGAN HATCHERY IMPROVEMENT PROJECT

PROCESS DRAWING INDEX

PROJECT NO: 14-23-0005
SHEET NO: G001
DATE: 10-2023
PAGE NO: 51

A/C	AIR CONDITIONING
A/E	ARCHITECT/ENGINEER
A	ARCHITECTURAL (DWG DISCIPLINE), AMP
AB	ANCHOR BOLT
ABC	AGGREGATE BASE COURSE
ABAN	ABANDON
AC	ALTERNATING CURRENT
ACST	ACOUSTIC
AD	ADDENDUM, AREA DRAIN
ADDL	ADDITIONAL
ADH	ADHESIVE
ADJ	ADJUSTABLE, ADJACENT
AF	AMP FRAME, AMP FUSE
AFF	ABOVE FINISH FLOOR
AFG	ABOVE FINISH GRADE
AGGR	AGGREGATE
AIC	AMPS INTERRUPTING CAPACITY
ALIG	ALIGNMENT
ALUM	ALUMINUM
ALT	ALTERNATE, ALTITUDE
AMB	AMBIENT
ANC	ANCHOR
AP	ACCESS PANEL
APRX	APPROXIMATE
APVD	APPROVED ARCH ARCHITECTURAL
ASSY	ASSEMBLY
AT	AMP TRIP
ATM	ATMOSPHERE
AUTO	AUTOMATIC
AUX	AUXILIARY
AVE	AVENUE
AVG	AVERAGE
AWG	AMERICAN WIRE GAGE
B/B	BACK TO BACK
BAL	BALANCE
BBD	BULLETIN BOARD
BC	BASE CABINET, BOTTOM CHORD, BOLT CENTER, BOLT CIRCLE
BD	BOARD
BE	BOTH ENDS, BELL END
BF	BOTH FACES, BOTTOM FACE, BLIND FLANGE, BOARD FEET
BFV	BUTTERFLY VALVE
BITUM	BITUMINOUS
BKG	BACKING
BL	BASE LINE
BLDG	BUILDING
BLK	BLOCK
BLKG	BLOCKING
BM	BENCHMARK, BEAM
BOC	BACK OF CURB
BOD	BOTTOM OF DUCT
BOG	BOTTOM OF GRILLE
BOL	BOTTOM OF LOUVER
BOM	BILL OF MATERIALS
BOP	BOTTOM OF PIPE
BOR	BOTTOM OF REGISTER
BOT	BOTTOM
BOU	BOTTOM OF UNIT
BP	BASE PLATE
BRG	BEARING
BRGP	BEARING PLATE
BRKT	BRACKET
BS	BOTH SIDES
BTU	BRITISH THERMAL UNIT
BTW	BETWEEN
BTWLD	BUTT WELD
BV	BALL VALVE
BW	BOTH WAYS
BYP	BYPASS
C TO C	CENTER TO CENTER
C&G	CURB & GUTTER
C	CHANNEL SHAPE, CENTIGRADE, CONDUIT, CIVIL (DRAWING DISCIPLINE)
CAB	CABINET
CAP	CAPACITY
CAT	CATALOG
CAV	CAVITY
CB	CATCH BASIN
CCB	CONCRETE BLOCK
CCW	COUNTER CLOCKWISE
CF	CUBIC FEET (FOOT)
CHFR	CHAMFER
CHD	CHORD
CHH	COMMUNICATION HANDHOLE
CI	CURB INLET
CIP	CAST-IN-PLACE
CIPB	CONCRETE INTERLOCKING PAVER BALLAST
CIRC	CIRCULATION, CIRCULAR
CJ	CONSTRUCTION JOINT, CONTROL JOINT
CKT	CIRCUIT
CL	CENTERLINE, CLASS, CLOSE
CLR	CLEAR
CMH	COMMUNICATION MANHOLE
CMU	CONCRETE MASONRY UNIT
CO	CLEAN OUT, CONCRETE OPENING
COL	COLUMN
COM	COMMON
COMB	COMBINATION
COMM	COMMUNICATION

COMP	COMPOSITION, COMPRESSIBLE, COMPOSITE
CONC	CONCENTRIC, CONCRETE
CONN	CONNECTION
CONST	CONSTRUCTION
CONT	CONTINUOUS
COORD	COORDINATE
CORR	CORROSIVE, CORRUGATED
CP	CHECKER PLATE, CONTROL POINT
CPLG	COUPLING
CSK	COUNTERSINK
CTR	CENTER
CTRL	CONTROL
CU	COPPER, CUBIC
CW	CLOCKWISE
CY	CUBIC YARD
d	PENNY (NAIL MEASURE)
D	DEEP, DIFFUSER
DB	DUCT BANK, DECIBEL, DRY BULB
DBA	DEFORMED BAR ANCHOR
DBL	DOUBLE
DC	DIRECT CURRENT
DEG	DEGREE
DEG C	DEGREE CENTIGRADE
DEG F	DEGREE FAHRENHEIT
DEMO	DEMOLITION
DEP	DEPRESSED
DEPT	DEPARTMENT
DET	DETAIL
DI	DROP INLET, DUCTILE IRON
DIA	DIAMETER
DIAG	DIAGONAL, DIAGRAM
DIFF	DIFFERENTIAL, DIFFERENCE
DIM	DIMENSION
DISCH	DISCHARGE
DIST	DISTANCE, DISTRIBUTION
DIV	DIVISION
DL	DEAD LOAD
DN	DOWN
DP	DEPTH
DS	DOWN SPOUT
DT	DOUBLE TEE, DRIP TRAP ASSEMBLY
DUP	DUPLICATE
DWG	DRAWING
DWL	DOWEL
E	EAST, ELECTRICAL (DWG DISCIPLINE)
EA	EACH, EXHAUST AIR
EC	ELECTRICAL CONTRACTOR
ECC	ECCENTRIC
EDB	ELECTRICAL DUCT BANK
EE	EACH END
EF	EACH FACE
EG	EXISTING GRADE
EGL	ENERGY GRADE LINE
EFF	EFFLUENT, EFFICIENCY
EHH	ELECTRICAL HANDHOLE
EIFS	EXTERIOR INSULATION & FINISH SYSTEM
EJ	EXPANSION JOINT
EL	ELBOW, ELEVATION
ELEC	ELECTRICAL
EMBD	EMBEDDED
EMER	EMERGENCY
EMH	ELECTRICAL MANHOLE
ENCL	ENCLOSURE
ENGR	ENGINEER
ENTR	ENTRANCE
EOP	EDGE OF PAVEMENT
EOW	EDGE OF WATER
EQ	EQUAL
EQUIP	EQUIPMENT
EQUIV	EQUIVALENT
ES	EACH SIDE, EQUAL SPACE, EMERGENCY SHOWER
ESEW	EMERGENCY SHOWER AND EYE WASH
EST	ESTIMATE
EW	EACH WAY, EMERGENCY EYE/FACE WASH
EWC	ELECTRIC WATER COOLER
EWEF	EACH WAY, EACH FACE
EWTB	EACH WAY, TOP AND BOTTOM
EXC	EXCAVATION
EXH	EXHAUST
EXIST	EXISTING
EXP	EXPANSION, EXPOSED
EXT	EXTERIOR, EXTERNAL, EXTENSION
F TO F	FACE TO FACE
FAB	FABRICATE
FBO	FURNISHED BY OWNER
FC	FLUSHING CONNECTION
FCA	FLANGED COUPLING ADAPTER
FCV	FIXED CONE VALVE
FD	FLOOR DRAIN
FDC	FLEXIBLE DUCT CONNECTION
FDR	FEEDER
FE	FLANGED END
FEC	FIRE EXTINGUISHER CABINET
FEXT	FIRE EXTINGUISHER
FF	FAR FACE, FACTORY FINISH, FLAT FACE
FG	FINISHED GRADE
FH	FIRE HYDRANT
FIN	FINISH

FL	FLOW, FLOW LINE
FLEX	FLEXIBLE
FLG	FLANGE
FLOR	FLUORESCENT
FLR	FLOOR
FLS	FLASHING, FLUSH
FND	FOUNDATION
FNC	FENCE
FO	FINISHED OPENING
FOB	FLAT ON BOTTOM
FOC	FACE OF CONCRETE, FACE OF CURB, FIBER OPTIC CABLE
FOF	FACE OF FINISH
FOM	FACE OF MASONRY
FOS	FACE OF STUDS
FOT	FLAT ON TOP
FPT	FEMALE PIPE THREAD
FR	FRAME
FRP	FIBERGLASS REINFORCED PLASTIC
FS	FLOOR SINK, FAR SIDE
FT	FEET, FOOT
FTG	FOOTING, FITTING FUR FURRED, FURRING
FURN	FURNITURE, FURNISH
FUT	FUTURE
FV	FACE VELOCITY
FW	FIELD WELD, FIRE WALL
FWD	FORWARD
FWE	FURNISHED WITH EQUIPMENT
FXTR	FIXTURE
G	GRILLE, GROUND, GENERAL (DWG DISCIPLINE)
GA	GAGE (METAL THICKNESS)
GAL	GALLON
GALV	GALVANIZED
GB	GRADE BREAK
GD	GUARD
GEN	GENERAL
GFCI	GROUND FAULT CIRCUIT INTERRUPTER
GL	GLASS
GP	GUY POLE
GR	GRADE
GRND	GROUND
GRTG	GRATING
GT	GREASE TRAP
GWB	GYPSUM WALLBOARD
GYP	GYPSUM HARDBOARD
H	HIGH
HB	HOSE BIB
HBD	HARDBOARD
HC	HANDICAPPED, HOLLOW CORE, HORIZONTAL CURVE
HC	HORIZONTAL CENTERLINE
HDR	HEADER
HDW	HARDWARE
HEX	HEXAGONAL
HH	HANDHOLE
HM	HOLLOW METAL
HORIZ	HORIZONTAL
HP	HIGH POINT, HORSEPOWER
HPC	HORIZONTAL POINT OF CURVATURE
HPS	HIGH PRESSURE SODIUM
HPT	HORIZONTAL POINT OF TANGENCY
HR	HOUR
HS	HEADED STUD, HIGH STRENGTH
HSS	HOLLOW STRUCTURAL SHAPE
HT	HEIGHT
HV	HIGH VOLTAGE
HVAC	HEATING, VENTILATION & AIR CONDITIONING
HWD	HARDWOOD
HWL	HIGH WATER LEVEL
HYD	HYDRAULIC HZ HERTZ, CYCLES PER SECOND
I	INSTRUMENTATION (DWG DISCIPLINE)
ID	INSIDE DIAMETER, INTERIOR DIMENSION
IE	INVERT ELEVATION
IF	INSIDE FACE
IH	INTAKE HOOD
IMP	IMPACT
IN	INCH
INC	INCLUDE, INCANDESCENT
INF	INFLUENT
INSTR	INSTRUMENTATION
INSUL	INSULATION
INT	INTERIOR, INTERSECTION
INTR	INTERMEDIATE, INTERIOR
INV	INVERT
IPS	IRON PIPE SIZE
IPT	INTERNAL PIPE THREAD
IR	INSIDE RADIUS
IRR	IRRIGATION
ISO	ISOMETRIC
JB	JUNCTION BOX
JCT	JUNCTION
JF	JOINT FILLER
JT	JOINT
K	KIP
KB	KNEE BRACE
KCMIL	THOUSAND CIRCULAR MILS
KD	KNOCK DOWN
KO	KNOCK OUT
KSI	KIPS PER SQUARE INCH

L	ANGLE, LENGTH, LAVATORY
LAM	LAMINATE
LATL	LATERAL
LB	LAG BOLT, POUND
LDR	LEADER
LF	LINEAR FOOT
LG	LONG
LH	LEFT HAND
LIN	LINEAR
LIQ	LIQUID
LL	LIVE LOAD
LLH	LONG LEG HORIZONTAL
LLV	LONG LEG VERTICAL
LMLU	LIQUID MARKER LECTURE UNIT
LNG	LONGITUDINAL
LOC	LOCATION
LP	LOW POINT
LPS	LOW PRESSURE SODIUM
LR	LONG RADIUS
LT	LEFT
LTD	LIMITED
LTG	LIGHTING
LTL	LINTEL
LTNG	LIGHTNING
LV	LOW VOLTAGE
LVR	LOUVER
LW	LIGHTWEIGHT
LWC	LIGHTWEIGHT CONCRETE
LWL	LOW WATER LEVEL
M	MECHANICAL (DWG DISCIPLINE)
MA	MIXED AIR
MAINT	MAINTENANCE
MAN	MANUAL
MAOP	MAXIMUM ALLOWABLE OPERATING PRESSURE
MATL	MATERIAL
MAX	MAXIMUM
MB	MACHINE BOLT
MBR	MEMBER
MCJ	MASONRY CONTROL JOINT
MECH	MECHANICAL
MED	MEDIUM
MFR	MANUFACTURER
MH	MANHOLE, METAL HALIDE
MID	MERCED IRRIGATION DISTRICT
MIN	MINIMUM
MIR	MIRROR
MISC	MISCELLANEOUS
MJ	MECHANICAL JOINT
MMB	MEMBRANE
MO	MASONRY OPENING
MOD	MODULAR, MODIFY
MON	MONUMENT
MPT	MALE PIPE THREAD
MSL	MEAN SEA LEVEL
MT	MOUNT
MU	MASONRY UNIT
MULL	MULLION
MV	MEDIUM VOLTAGE
MW	MONITORING WELL
N	NORTH, NEUTRAL
NA	NOT APPLICABLE
NAT	NATURAL
NC	NORMALLY CLOSED
NEG	NEGATIVE
NF	NEAR FACE, NON-FUSED
NG	NATURAL GAS
NIC	NOT IN CONTRACT
NO	NORMALLY OPEN, NUMBER
NOM	NOMINAL
NPS	NOMINAL PIPE SIZE
NPT	NATIONAL PIPE THREAD
NS	NEAR SIDE
NTS	NOT TO SCALE
NWL	NORMAL WATER LEVEL
O TO O	OUT-TO-OUT
OA	OUTSIDE AIR, OVERALL
OC	ON CENTER
OCPD	OVER CURRENT PROTECTION DEVICE
OD	OUTSIDE DIAMETER
OH	OVERHEAD
OPNG	OPENING
OPP	OPPOSITE
OPT	OPTIONAL
ORD	OVERFLOW ROOF DRAIN
ORIG	ORIGINAL
OVFL	OVERFLOW
OVHG	OVERHANG
OZ	OUNCE
P	PAINT, PROCESS (DWG DISCIPLINE)
PAR	PARALLEL, PARAPET
PB	PANIC BAR, PULL BOX
PBD	PARTICLE BOARD
PC	POINT OF CURVE, PIECE, PRECAST
PCC	POINT OF COMPOUND CURVATURE
PCF	POUNDS PER CUBIC FOOT
PCT	PERCENT
PE	PLAIN END
PED	PEDESTAL
PEN	PENETRATION

PERF	PERFORATED
PERIM	PERIMETER
PERM	PERMANENT
PERP	PERPENDICULAR
PF	POWER FACTOR
PH	PHASE
PI	POINT OF INTERSECTION
PKG	PACKAGE
PL	PLATE, PROPERTY LINE
PLBG	PLUMBING
PLF	POUNDS PER LINEAR FOOT
PNEU	PNEUMATIC
POL	POLISH
POS	POSITIVE, POSITION
PP	POLYPROPYLENE, POWER POLE
PRC	POINT OF REVERSE CURVATURE
PREF	PREFINISHED
PREFAB	PREFABRICATED
PRELIM	PRELIMINARY
PREP	PREPARE
PRES	PRESSURE
PROP	PROPERTY
PROT	PROTECTION
PSF	POUNDS PER SQUARE FOOT
PSI	POUNDS PER SQUARE INCH
PSIA	POUNDS PER SQUARE INCH ABSOLUTE
PSIG	POUNDS PER SQUARE INCH GAGE
PT	POINT, POINT OF TANGENCY
PTN	PARTITION
PVC	POLYVINYL CHLORIDE
PVMT	PAVEMENT
PWD	PLYWOOD
PZ	PIEZOMETER
Q	RATE OF FLOW
QTR	QUARTER
QTY	QUANTITY
QUAL	QUALITY
R&R	REMOVE AND REPLACE
R&S	REMOVE AND SALVAGE
R	RADIUS, REGISTER, RISER
RA	RETURN AIR
RB	RESILIENT BASE, ROCK BERM
RCPT	RECEPTACLE
RD	ROOF DRAIN
REC	RECESS
RECD	RECEIVED
RECT	RECTANGULAR
RED	REDUCER
REF	REFERENCE
REINF	REINFORCING
REQD	REQUIRED
RESIL	RESILIENT
RET	RETAINING, RETURN
REV	REVISION, REVERSE
RFL	REFLECTED, REFLECTOR
RGS	RIGID GALVANIZED STEEL
RH	RELIEF HOOD, RIGHT HAND, RELATIVE HUMIDITY
RL	REQUIRED LAP
RND	ROUND
RNG	RENEWABLE NATURAL GAS
RO	ROUGH OPENING
ROW	RIGHT-OF-WAY
RPM	REVOLUTIONS PER MINUTE
RR	RAILROAD
RT	RIGHT
S	SOUTH, SINK, STRUCTURAL (DWG DISCIPLINE)
SA	SUPPLY AIR
SAN	SANITARY
SC	SOLID CORE
SCH	SCHEDULE
SCHEM	SCHEMATIC
SCRN	SCREEN
SE	STEEL/ALUMINUM EDGE
SEC	SECONDARY, SECONDS
SECT	SECTION
SEP	SEPARATE
SF	SQUARE FOOT
SH	SHOWER
SHT	SHEET
SHTG	SHEATHING
SIM	SIMILAR
SL	SLOPE
SLTD	SLOTTED
SLV	SLEEVE
SMLS	SEAMLESS
SOG	SLAB ON GRADE
SP	SOUNDPROOF, STANDPIPE
SPC	SPACING
SPEC	SPECIFICATION
SPLY	SUPPLY
SPT	SET POINT
SQ	SQUARE
SR	SHORT RADIUS
SS	SERVICE SINK
SST	STAINLESS STEEL
ST	STREET
STA	STATION
STD	STANDARD
STIF	STIFFENER
STIR	STIRRUP

STL	STEEL
STOR	STORAGE
STR	STRUCTURAL, STRAIGHT
SUB	SUBSTITUTE
SUC	SUCTION
SUSP	SUSPENDED
SY	SQUARE YARD
SYM	SYMBOL
SYMM	SYMMETRICAL
SYN	SYNTHETIC
SYS	SYSTEM
T&B	TOP AND BOTTOM
T&G	TONGUE AND GROOVE
T	TILE, TREAD
TA	TEMPERED AIR
TAN	TANGENT
TBM	TEMPORARY BENCHMARK
TEMP	TEMPORARY, TEMPERATURE
THK	THICK
THRD	THREAD
THRU	THROUGH
TOB	TOP OF BOLT, TOP OF BANK, TOP OF BEAM
TOC	TOP OF CURB, TOP OF CONCRETE
TOD	TOP OF DUCT
TOF	TOP OF FOOTING
TOG	TOP OF GRATING
TOL	TOLERANCE, TOP OF LEDGER
TOM	TOP OF MASONRY
TOP	TOP OF PLATE
TOPO	TOPOGRAPHY
TOS	TOP OF SLAB, TOP OF STEEL
TOW	TOP OF WALL
TP	TELEPHONE POLE, TOE PLATE, TRAP PRIMER
TPG	TOPPING
TRANS	TRANSITION
TRD	TRENCH DRAIN
TYP	TYPICAL
UG	UNDERGROUND
ULT	ULTIMATE
UMAT	COUNTY IDENTIFIER FOR WELLS
UNFN	UNFINISHED
UNO	UNLESS NOTED OTHERWISE
UTIL	UTILITY
V	VENT, VELOCITY, VOLT
VA	VOLT AMPERE
VAC	VACUUM
VAR	VARNISH, VARIABLE, VOLT AMPERES REACTIVE
VB	VAPOR BARRIER, VINYL BASE, VALVE BOX
VC	VERTICAL CURVE
VCT	VINYL COMPOSITION TILE, VERTICAL CENTERLINE
VEL	VELOCITY
VENT	VENTILATION
VERT	VERTICAL
VS	VERSES, VAPOR SEAL
VOL	VOLUME
VPC	VERTICAL POINT OF CURVATURE
VPI	VERTICAL POINT OF INTERSECTION
VPT	VERTICAL POINT OF TANGENCY
VTR	VENT THROUGH ROOF
VWC	VINYL WALL COVERING
W/	WITH
W/O	WITHOUT
W	WATT, WEST, WIDE, WINDOW, WIRE, WIDE FLANGE BEAM
WC	WATER CLOSET, WATER COLUMN
WD	WIDTH
WF	WIDE FLANGE, WASH FOUNTAIN
WG	WIRE GLASS, WATER GAGE
WH	WALL HYDRANT, WEEP HOLE
WL	WATER LEVEL
WLD	WELDED
WM	WIRE MESH
WP	WATERPROOF, WORKING POINT
WTHP	WEATHERPROOF
WS	WATERSTOP, WATER SURFACE
WSEL	WATER SURFACE ELEVATION
WT	WEIGHT, WATER TIGHT
WWF	WELDED WIRE FABRIC
XS	EXTRA STRONG
XXS	DOUBLE EXTRA STRONG
XSECT	CROSS SECTION
YH	YARD HYDRANT
YS	YIELD STRENGTH

GENERAL NOTES:

1. THESE ABBREVIATIONS APPLY TO THE ENTIRE SET OF CONTRACT DRAWINGS.
2. LISTING OF ABBREVIATIONS DOES NOT IMPLY ALL ABBREVIATIONS ARE USED IN THE CONTRACT DRAWINGS.
3. ABBREVIATIONS SHOWN ON THIS SHEET INCLUDE VARIATIONS OF THE WORD. FOR EXAMPLE, "MOD" MAY MEAN MODIFY OR MODIFICATION; "INC" MAY MEAN INCLUDED OR INCLUDING; "REINF" MAY MEAN EITHER REINFORCE OR REINFORCING.
4. SCREENING OR SHADING OF WORK IS USED TO INDICATE EXISTING COMPONENTS OR TO DE-EMPHASIZE PROPOSED IMPROVEMENTS TO HIGHLIGHT SELECTED TRADE WORK. REFER TO CONTEXT OF EACH SHEET FOR USAGE.

REVIEWED FOR CODE COMPLIANCE
Thomas W Peterson
12/14/2023
DIVISION OF FACILITIES CONSTRUCTION AND MANAGEMENT
DFCM CODE COMPLIANCE OFFICER

NO.	REVISIONS	BY	DATE
	PUBLISHED		
C	100% DESIGN REVIEW	JT	10/23
B	90% DESIGN REVIEW	JT	9/23
A	50% DESIGN REVIEW	JT	5/23

This document or any part thereof in detail or design concept is the property of Forsgren Associates Inc. and shall not be copied without the written authorization of Forsgren Associates Inc.

DRAWN DJ
DESIGNED MEC
APPROVED
QA MLL

ATTENTION
LINE IS 2-INCHES
AT 24"x36" SIZE
IF NOT 2-INCHES, SCALE DRAWING ACCORDINGLY

PROFESSIONAL ENGINEER — No. 13614104-2202 — Brent Welton — BRENT WELTON — STATE OF UTAH
10/04/2023

FISHERIES EXPERIMENT STATION
UTAH DIVISION OF WILDLIFE RESOURCES
1465 WEST 200 NORTH
LOGAN, UTAH 84321

UTAH DNR WILDLIFE RESOURCES

McMillen

Blue Stakes of UTAH 811 — Bluestakes.org

WARN WATER AQUACULTURE BUILDING
LOGAN HATCHERY IMPROVEMENT PROJECT
STANDARD ABBREVIATIONS

PROJECT NO: 14-23-0005
SHEET NO: G002
DATE: 10-2023
PAGE NO: 52

SHEET SYMBOLS

PLAN
SCALE: 1/2"= 1'-0"

0' 2' 4'

N

SECTION IDENTIFICATION

(1) SECTION CUT ON DRAWING C102:

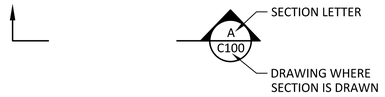

(2) ON DRAWING C103 THIS SECTION IS IDENTIFIED AS:

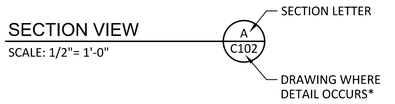

DETAIL IDENTIFICATION

(1) DETAIL CALL-OUT ON DRAWING C102:

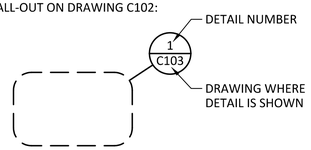

(2) ON DRAWING C103 THIS SECTION IS IDENTIFIED AS:

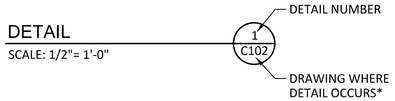

*NOTE: IF PLAN AND SECTION (OR DETAIL CALL-OUT AND DETAIL) ARE SHOWN ON SAME DRAWING. DRAWING NUMBER IS REPLACED BY A LINE.

STANDARD DETAIL IDENTIFICATION

(1) DETAIL CALL-OUT ON PLAN OR SECTION:

(2) ON DETAIL DRAWINGS, IDENTIFIED AS:

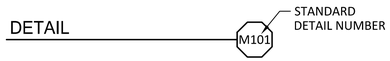

IMAGE IDENTIFICATION

SITE PLAN LINE TYPES

X X	FENCE LINE
P P	OVERHEAD POWER
455	MAJOR CONTOUR
456	MINOR CONTOUR
· · ·	EDGE OF WATERLINE
TOE	TOE OF SLOPE
TOB	TOP OF BANK
SS SS	SANITARY SEWER
SD SD	STORM DRAIN
EP EP	EDGE OF PAVEMENT
EG EG	EDGE OF GRAVEL
W	WATTLE
SF SF	SILT FENCE
CF CF	CONSTRUCTION FENCE
GAS	GAS LINE
IRR IRR	IRRIGATION LINE
WTR	WATER LINE
TEL	TELEPHONE LINE
COM	COMMUNICATION LINE
OHP	OVERHEAD ELECTRICAL/POWER
EUG	UNDERGROUND ELECTRICAL
P/L	PROPERTY LINE
OHP	EXISTING OVERHEAD POWER LINE
OHP&T	EXISTING OVERHEAD POWER & TELEPHONE LINE
T	EXISTING OVERHEAD TELEPHONE LINE
BT	EXISTING BURIED TELEPHONE LINE EVIDENCED BY PEDESTALS & WARNING PADDLES
X X X X X	EXISTING FENCE LINE
— —	PROJECT BOUNDARY
	TREE PROTECTION FENCE
TC	TURBIDITY CURTAIN
SF SF	SILT FENCING

SITE PLAN SYMBOLS

N	ARROW INDICATES DIRECTION OF PLAN NORTH
	CONIFER TREE: FIR, SPRUCE, LARCH OR PINE, 8" DIAMETER OR LARGER.
	DECIDUOUS TREE: COTTONWOOD, HAWTHORN, ASPEN, 8" DIAMETER OR LARGER.
MH	MANHOLE
EB	ELECTRIC BOX
	STORM DRAIN MANHOLE
FH	FIRE HYDRANT
YH-X	YARD HYDRANT
	SURVEY CONTROL POINT, AS NOTED.
	POLE ANCHOR
	POWER POLE
	LIGHT POLE
	SIGN
	SURVEY HUB
	SECTION CORNER
	BENCH MARK
	EXISTING HEADWALL
	EXISTING MONITORING STATION
X X	EXISTING FENCE
	STATE PLANE COORDINATE MARKER
	EXISTING TREE LINE
	EXISTING BUILDING, STRUCTURES
	EXISTING SECTION CORNER MONUMENT FOUND AS DESCRIBED
	EXISTING 5/8" REBAR CONTROL POINT MONUMENT, BORING LOCATION
W	EXISTING HOSE BIB
	EXISTING PORTABLE IRRIGATION WATER PUMP
WELL	EXISTING 6" WATER WELL
	EXISTING ELECTRICAL OUTLET
P	EXISTING POWER POLE
T	EXISTING TELEPHONE PEDESTAL
	CONTROL POINT
	PUMP
TP	TEST PIT LOCATION

MISCELLANEOUS SYMBOLS

	CHANGE OF PIPE MTL
OR	END OF PIPE
℄	CENTERLINE
Ø	DIAMETER
∠	ANGLE
ℙ	PLATE
±	PLUS/MINUS

ARCHITECTURAL SYMBOLS

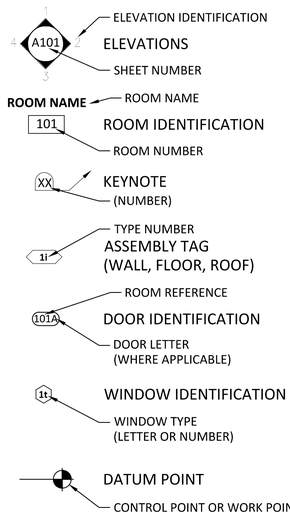

HATCH SYMBOLS

	ROCK, TYPE AS NOTED (PLAN/SECTION)
	BED ROCK
	EXISTING GRADE (SECTION)
	NEW SOIL (SECTION)
	CONCRETE (SECTION/PLAN)
	SAND, GROUT (PLAN/SECTION)
	STEEL (SECTION)
	GRATING (PLAN)
	MASONRY (PLAN)
	WOOD, SIZE/TYPE AS NOTED (PLAN)
	WOOD, SIZE/TYPE AS NOTED (SECTION)
	RIP RAP (PLAN/SECTION)
	RIGID INSULATION (SECTION)
	ASPHALT CONCRETE PAVEMENT SURFACE (PLAN/SECTION)
	GRASS/VEGETATION (PLAN)
	BATT INSULATION (SECTION)
	NEW CONSTRUCTION
	EXISTING
	EXISTING TO BE REMOVED OR DEMOLISHED
	CLEARING AND GRUBBING
	ASPHALT
	GRASS/VEGETATION
	GRAVEL

GENERAL NOTES:

1. ALL SYMBOLS ARE NOT NECESSARILY USED. THIS IS A STANDARD DRAWING SHOWING COMMON SYMBOLS ON THIS PROJECT.
2. SCREENING OR SHADING OF WORK IS USED TO INDICATE EXISTING COMPONENTS OR TO DE-EMPHASIZE PROPOSED IMPROVEMENTS TO HIGHLIGHT SELECTED TRADE WORK. REFER TO CONTEXT OF EACH DRAWING FOR USAGE.

REVIEWED FOR CODE COMPLIANCE
Thomas W Peterson
12/1/4/2023
DIVISION OF FACILITIES CONSTRUCTION AND MANAGEMENT

DFCM CODE COMPLIANCE OFFICER

NO.	REVISIONS	BY	DATE
	PUBLISHED		
C	100% DESIGN REVIEW	JT	10/23
B	90% DESIGN REVIEW	JT	9/23
A	50% DESIGN REVIEW	JT	5/23

This document or any part thereof in detail or design concept is the property of Forsgren Associates Inc. and shall not be copied without the written authorization of Forsgren Associates Inc.

DRAWN DJ
DESIGNED MEC
APPROVED
QA MLL

ATTENTION
LINE IS 2-INCHES
AT 24"x36" SIZE
IF NOT 2-INCHES, SCALE DRAWING ACCORDINGLY

PROFESSIONAL ENGINEER
No. 13614104-2202
BRENT WELTON
STATE OF UTAH
10/04/2023

FISHERIES EXPERIMENT STATION
UTAH DIVISION OF WILDLIFE RESOURCES
1465 WEST 200 NORTH
LOGAN, UTAH 84321

UTAH DNR WILDLIFE RESOURCES

McMillen

Blue Stakes of UTAH 811 Bluestakes.org

WARN WATER AQUACULTURE BUILDING
LOGAN HATCHERY IMPROVEMENT PROJECT

STANDARD SYMBOLS

PROJECT NO: 14-23-0005
SHEET NO: G003
DATE: 10-2023
PAGE NO: 53

VALVES

- 3 WAY MULT-PORT VALVE
- 4 WAY MULTI-PORT VALVE
- AIR VACUUM, AIR RELEASE, OR AIR VACUUM AND AIR RELEASE ASSEMBLY
- ANGLE VALVE
- ANGLE CHECK VALVE
- BACKFLOW PREVENTER VALVE
- BACKWATER VALVE
- BALL VALVE
- BALL CHECK VALVE
- BUTTERFLY VALVE
- OR CHECK VALVE
- CONE VALVE
- FLAP VALVE
- GATE VALVE
- DIAPHRAGM VALVE
- ECCENTRIC PLUG VALVE
- GLOBE VALVE
- HB
- HB OR HB HOSE BIBB FROM TOP, FRONT AND SIDE VIEW
- HB
- WH
- WH OR WH WHARF HYDRANT FROM TOP, FRONT AND SIDE VIEW
- WH
- NEEDLE VALVE
- PRESSURE REGULATING VALVE
- PRESSURE RELIEF VALVE
- SLEEVE VALVE
- STOP CHECK VALVE
- TELESCOPING VALVE
- PINCH VALVE

VALVE AND GATE ACTUATORS

- E — ELECTRIC ACTUATOR
- H — HYDRAULIC ACTUATOR
- P — PNEUMATIC ACTUATOR
- S — SOLENOID ACTUATOR
- M — MOTOR OPERATOR
- HAND / MANUAL ACTUATOR

GATES

- SLIDE GATE (CAST IRON, ALUMINUM OR STAINLESS STEEL)
- STOP GATE OR SHEAR GATE

FITTINGS AND ACCESSORIES

- ANNULAR SEAL
- ATMOSPHERIC VENT
- BLIND FLANGE
- CAP (THREAD-ON)
- CAP (WELD-ON)
- QUICK DISCONNECT
- MALE QUICK DISCONNECT WITH CAP
- FEMALE QUICK DISCONNECT WITH CAP
- T — CONDENSATE TRAP
- INJECTOR/EDUCTOR
- OR — LEVEL SWTICH
- IN-LINE STATIC MIXER
- FLOAT OR DISPLACER

FITTINGS AND ACCESSORIES

- CALIBRATION COLUMN
- FLOW METER
- UM — ULTRASONIC METER
- DIAPHRAGM SEAL
- DRAIN
- EXPANSION JOINT
- OR — FLEXIBLE CONNECTION
- FCO / FCO — FLOOR CLEANOUT
- FLOOR DRAIN
- FLOOR SINK
- HUB DRAIN
- LEVEL TRANSMITTER
- VOLUMETRIC FEEDER
- MECHANICAL TYPE COUPLING
- PIPE SUPPORT (PLAN)
- PULSATION DAMPENER
- REDUCER - CONCENTRIC
- REDUCER - ECCENTRIC
- REMOVABLE SPOOL PIECE
- SLEEVE TYPE COUPLING
- STRAINER - WYE TYPE
- G — PRESSURE GAGE
- G S — PRESSURE GAGE AND SWITCH WITH DIAPHRAGM SEALS
- T — TRAP
- UNION
- WCO / WCO — WALL CLEANOUT
- VERT ELBOW DOWN
- VERT ELBOW UP
- VERT TEE UP
- VERT TEE DOWN

PUMPS & COMPRESSORS

- HORIZONTAL ANSI END SUCTION PUMP
- CENTRIFUGAL PUMP
- CHEMICAL METERING PUMP
- CIRCULATING PUMP
- DRUM PUMP
- GEAR PUMP OR ROTARY POSITIVE DISPLACEMENT BLOWER
- HOSE PUMP
- PROGRESSIVE CAVITY PUMP
- ROTARY LOBE PUMP
- SUBMERSIBLE PUMP
- VERTICAL TURBINE PUMP
- PISTON DRIVEN COMPRESSOR
- COMPRESSOR
- M — MOTORIZED MIXER
- LEVEL TRANSMITTER
- DIAPHRAGM PUMP
- CHEMICAL METERING/TUBING PUMP
- CENTRIFUGAL PUMP
- ULTRA VIOLET

GENERAL NOTES FOR MECHANICAL DRAWINGS:

1. FOR EXTERIOR YARD PIPING, SEE CIVIL ("C") DRAWINGS. FOR INTERIOR PROCESS PIPING AND PLANT/PROCESS DRAINS, SEE PROCESS MECHANICAL AND FLOOR DRAIN PIPING ("M") DRAWINGS. FOR MECHANICAL AND OTHER HVAC EQUIP. - SEE HVAC ("H") DRAWINGS. FOR FIRE PROTECTION PIPING REQUIREMENTS, SEE PLUMBING ("FP") DRAWINGS.
2. SEE GENERAL ("G") DRAWINGS FOR ADDITIONAL NOTES, LEGEND, SYMBOLS, ABBREVIATIONS, AND EQUIPMENT, PIPE, AND AREA DESIGNATION SYSTEMS
3. THE "FIELD LEVEL" OF THE INSTRUMENTATION (P&ID) DRAWINGS ARE INTENDED TO SERVE AS PROCESS PIPING SCHEMATICS FOR ALL UTILITY WATER AND HYD ACTUATOR SYSTEMS. PROCESS SYSTEM INSTRUMENTATION & ALL PIPING OF 1.5" DIAMETER AND SMALLER ARE NOT SHOWN IN ENTIRETY ON PROCESS MECH. (M SHEETS) PLANS AND SECTIONS. CONTRACTOR SHALL SUPPLY & FIELD ROUTE PIPING IN AGREEMENT WITH THE P&ID "FIELD LEVEL" PIPING SCHEMATICS AS WELL AS THE INFORMATION SHOWN ON THE M SHEETS.
4. PIPING SHALL RUN THROUGH CONC. SLABS AND WALLS WHERE INDICATED ON THE DRAWINGS UTILIZING WALL AND FLOOR FITTINGS AS NOTED OR REQUIRED.
5. ALL PIPING NEAR VALVES, FITTINGS, APPURTENANCES, EXPANSION JOINTS, COUPLINGS, AND EQUIPMENT CONNECTIONS ARE TO BE PROPERLY SUPPORTED AND ANCHORED ACCORDING TO MANUFACTURER'S RECOMMENDATIONS (IN ADDITION TO PIPE SUPPORT REQUIREMENTS OF THE CONTRACT DOCUMENTS). SUPPORT AND THRUST DETAILS SHALL BE ACCEPTABLE TO THE DESIGN ENGINEER AND SHALL BE BASED UPON ALL PIPES FULL OF WATER.
6. PIPING SHALL BE INSTALLED SUCH THAT ANY PIPES, LAYER OF PIPING, OR EQUIPMENT CAN BE REMOVED WITHOUT DISTURBING REMAINING PIPES OR SUPPORTS. PIPE ANCHORS, EQUIPMENT, AND PIPE SUPPORTS / HANGERS ARE TYPICALLY NOT SHOWN FOR PIPES OF 2-INCH DIAMETER AND SMALLER. SEE CONTRACT SPECIFICATIONS AND STANDARD DETAILS.
7. WHERE MECHANICAL (SPLIT RING) OR SLEEVE-TYPE COUPLINGS ARE REQUIRED, INSURE THAT THE JOINTS ARE FULLY SEPARATED AND EQUALLY SPACED EACH SIDE OF SEPARATION AFTER THE RINGS ARE IN PLACE AND PRIOR TO TIGHTENING THE BOLTS.
8. EQUIPMENT PADS INDICATED ARE APPROXIMATE. EXACT DIMENSIONS SHALL BE DETERMINED BY THE FINAL APPROVED SUBMITTALS AND EQUIPMENT VENDOR REQUIREMENTS. ALL FLOOR-MOUNTED EQUIPMENT, UNO, SHALL BE SET ON EQUIPMENT PADS IN ACCORDANCE WITH THE TYPICAL EQUIPMENT PAD AND ANCHOR BOLT DETAILS SHOWN ON THE STRUCTURAL DRAWINGS AND AS SPECIFIED.
9. THE FINAL ORIENTATION OF VALVE OPERATORS INCLUDING HANDWHEELS AND GEAR OPERATORS SHALL BE COORDINATED BETWEEN THE CONTRACTOR AND DESIGN ENGINEER / CONSTRUCTION MANAGER DURING SHOP DRAWING SUBMITTALS AND INSTALLATION.
10. THE DESIGN ENGINEER IS RESPONSIBLE FOR MAKING NECESSARY ADJUSTMENTS TO LAYOUTS AND DIMENSIONS SHOWN TO ACCOMMODATE FINAL EQUIPMENT FURNISHED.
11. FOR PIPES 4-INCHES IN DIAMETER OR LARGER, PIPE SUPPORT SPACING SHALL BE AS SHOWN ON THE DRAWINGS OR AS SPECIFIED, WHICHEVER IS MORE RESTRICTIVE.

LEGEND:

- RAS SUPPLY (RS)
- RAS SUPPLY RETURN (RS)
- TANK DRAIN (RR)
- TRENCH TO STORM DRAIN
- OXYGEN (LOX OR GOX)
- FORMALIN (F)
- WARM WATER WELLS (WW)
- COLD WATER WELLS (CW)
- CHILLED WATER (CHW)
- HOT WATER LOOP (HW) — HW

GENERAL NOTES:

1. ALL SYMBOLS ARE NOT NECESSARILY USED. THIS IS A STANDARD DRAWING SHOWING COMMON SYMBOLS ON THIS PROJECT.
2. SCREENING OR SHADING OF WORK IS USED TO INDICATE EXISTING COMPONENTS OR TO DE-EMPHASIZE PROPOSED IMPROVEMENTS TO HIGHLIGHT SELECTED TRADE WORK. REFER TO CONTEXT OF EACH DRAWING FOR USAGE.

REVIEWED FOR CODE COMPLIANCE
Thomas W Peterson
12/14/2023
DIVISION OF FACILITIES CONSTRUCTION AND MANAGEMENT
DFCM CODE COMPLIANCE OFFICER

NO.	REVISIONS	BY	DATE
C	100% DESIGN REVIEW	JT	10/23
B	90% DESIGN REVIEW	JT	9/23
A	50% DESIGN REVIEW	JT	5/23

This document or any part thereof in detail or design concept is the property of Forsgren Associates Inc. and shall not be copied without the written authorization of Forsgren Associates Inc.

DRAWN DJ
DESIGNED MEC
APPROVED
QA MLL

ATTENTION
LINE IS 2-INCHES AT 24"x36" SIZE
IF NOT 2-INCHES, SCALE DRAWING ACCORDINGLY

PROFESSIONAL ENGINEER — No. 13614104-2202 — BRENT WELTON — STATE OF UTAH
10/04/2023

FISHERIES EXPERIMENT STATION
UTAH DIVISION OF WILDLIFE RESOURCES
1465 WEST 200 NORTH
LOGAN, UTAH 84321

UTAH DNR WILDLIFE RESOURCES

McMillen

Blue Stakes of UTAH 811 — bluestakes.org

WARN WATER AQUACULTURE BUILDING
LOGAN HATCHERY IMPROVEMENT PROJECT

PROCESS FLOW SCHEMATIC LEGEND AND ABBREVIATIONS

PROJECT NO: 14-23-0005
SHEET NO: PF001
DATE: 10-2023
PAGE NO: 54

SHEET NOTES:

1. LINE SIZES SHOWN ON INCOMING PIPING SHOWN FOR REFERENCE ONLY.
2. SEE MECHANICAL SHEETS FOR PROCESS PIPING CALLOUTS.

TRUNK LINE EXIST WARM WATER WELLS

REDUCING TEE

6" WW (16)

REDUCING TEE

6" WW (16)

12" WW (16)

MAKE-UP WATER

WARM WATER LINES FROM WELLS

HYBRID STRIPED BASS (MODULE 1) (SEE PF102)

HYBRID STRIPED BASS (MODULE 2) (SEE PF102)

INCUBATION (SEE PF108)

WALLEYE (MODULE 3) (SEE PF105)

WARM WATER WELLS

WELL #6

WELL #8

WELL #23

WELL #3

FORMALINE BULK STORAGE TANK

4" CHW (16)

4" CW (16)

CHILLER #1

CHILLER #2

8" CW (16)

COLD WATER LINE FROM HATCHERY BLDG

HATCHERY BUILDING HYPER INFUSION TEAM DISCUSSION

FROM DRUM FILTER BACKWASH

COLD WATER WELLS

WELL #5

WELL #22

WELL #14

WELL #13

WELL #16

WELL #1

WELL #2

WELL #9

WELL #21

WELL #20

WELL #19

WELL #18

OXYGEN FROM BULK STORAGE TANK

2 1/2" GOX (14)

EXIST O2 TANK

TRENCH DRAINS
STORM DRAINS
OUTFALL

HOLDING TANK/SOLIDS ACCUMULATOR

LIQUID OVERFLOW

STORM DRAIN

OUTFALL

HOLDING TANK/SOLIDS ACCUMULATOR

LIQUID OVERFLOW

LEGEND:

- RAS SUPPLY (RS)
- RAS SUPPLY RETURN (RS)
- TANK DRAIN (RR)
- TRENCH TO STORM DRAIN
- OXYGEN (LOX OR GOX)
- FORMALIN (F)
- WARM WATER WELLS (WW)
- COLD WATER WELLS (CW)
- CHILLED WATER (CHW)
- HOT WATER LOOP (HW) — HW —

REVIEWED FOR CODE COMPLIANCE
Thomas W Peterson
12/14/2023
DIVISION OF FACILITIES CONSTRUCTION AND MANAGEMENT

DFCM CODE COMPLIANCE OFFICER

	PUBLISHED		
C	100% DESIGN REVIEW	JT	10/23
B	90% DESIGN REVIEW	JT	9/23
A	50% DESIGN REVIEW	JT	5/23
NO.	REVISIONS	BY	DATE

This document or any part thereof in detail or design concept is the property of Forsgren Associates Inc. and shall not be copied without the written authorization of Forsgren Associates Inc.

DRAWN DJ
DESIGNED MEC
APPROVED
QA MLL

ATTENTION
LINE IS 2-INCHES
AT 24"x36" SIZE
IF NOT 2-INCHES, SCALE DRAWING ACCORDINGLY

PROFESSIONAL ENGINEER No. 13614104-2202 BRENT WELTON STATE OF UTAH
10/04/2023

FISHERIES EXPERIMENT STATION
UTAH DIVISION OF WILDLIFE RESOURCES
1465 WEST 200 NORTH
LOGAN, UTAH 84321

UTAH DNR WILDLIFE RESOURCES

McMillen

Blue Stakes of UTAH 811 Bluestakes.org

WARN WATER AQUACULTURE BUILDING
LOGAN HATCHERY IMPROVEMENT PROJECT

SYSTEM PROCESS
FLOW SCHEMATIC

PROJECT NO: 14-23-0005
SHEET NO: PF100
DATE: 10-2023
PAGE NO: 55

LIST OF KEY POINTS				
KEY POINTS	WATER SURFACE ELEVATION	FLOW (GPM)	PIPE	NOTES
1	4459.30	520	10"	DEGASSER INLET
2	4448.30	520	10"	LHO OUTLET
3	4445.80	65	3"	TANK LEVEL, 65 GPM PER TANK, AT 8 TANK IS 520 GPM
4	4445.76	65	-	SIDE DRAIN LEVEL, 65 GPM PER TANK, AT 8 TANK IS 520 GPM
5	4445.55	520	10"	DRUM FILTER INLET
6	4445.30	520	10"	DRUM FILTER OUTLET
7	4444.76	520	-	PRE CHAMBER - MBBR
8	4444.71	520	-	MBBR
9	4444.67	520	-	PUMP INTAKE CHAMBER

NOTE: ELEVATION ARE SHOWN WITH THE FLOOR BEING TOS 4442.80'

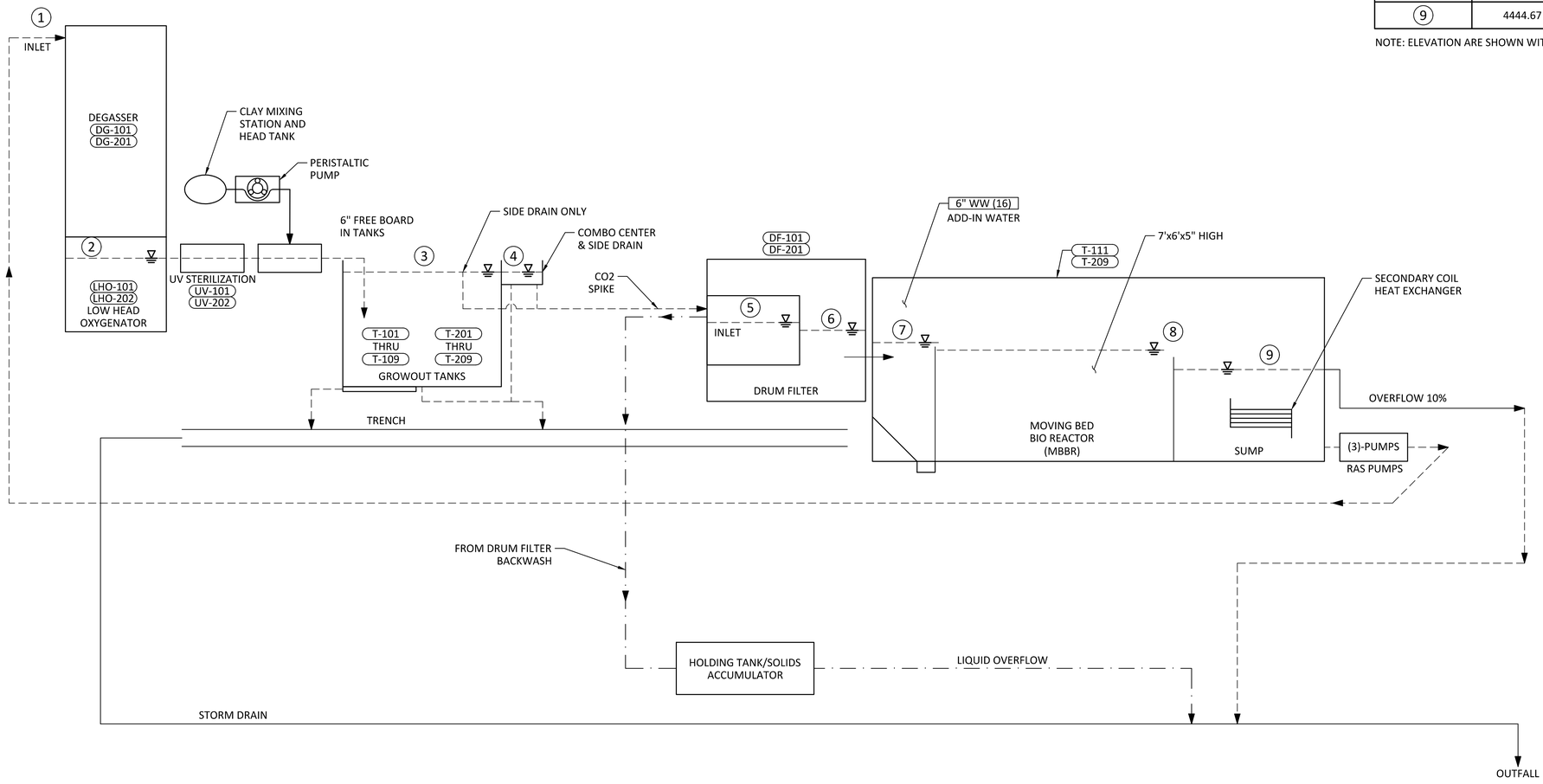

HYBRID STRIPED BASS REARING
(MODULE 1 AND 2)

SCALE: NTS

SHEET NOTES:

1. EQUIPMENT CALL OUT WITH X AS A PLACE HOLDER ARE BEING USED FOR BOTH MODULE 1 & MODULE 2 (MIRRORED). EQUIPMENT IS INDIVIDUALLY LISTED IN THE EQUIPMENT SCHEDULES.

LEGEND:

- RAS SUPPLY (RS)
- RAS SUPPLY RETURN (RS)
- TANK DRAIN (RR)
- TRENCH TO STORM DRAIN
- OXYGEN (LOX OR GOX)
- FORMALIN (F)
- WARM WATER WELLS (WW)
- COLD WATER WELLS (CW)
- CHILLED WATER (CHW)
- HOT WATER LOOP (HW) — HW

REVIEWED FOR CODE COMPLIANCE
Thomas W Peterson
12/1/2023
DIVISION OF FACILITIES CONSTRUCTION AND MANAGEMENT
DFCM CODE COMPLIANCE OFFICER

NO.	REVISIONS	BY	DATE
C	100% DESIGN REVIEW	JT	10/23
B	90% DESIGN REVIEW	JT	9/23
A	50% DESIGN REVIEW	JT	5/23

This document or any part thereof in detail or design concept is the property of Forsgren Associates Inc. and shall not be copied without the written authorization of Forsgren Associates Inc.

DRAWN DJ
DESIGNED MEC
APPROVED
QA MLL

ATTENTION
LINE IS 2-INCHES
AT 24"x36" SIZE
IF NOT 2-INCHES, SCALE DRAWING ACCORDINGLY

PROFESSIONAL ENGINEER — No. 13614104-2202 — BRENT WELTON — STATE OF UTAH
10/04/2023

FISHERIES EXPERIMENT STATION
UTAH DIVISION OF WILDLIFE RESOURCES
1465 WEST 200 NORTH
LOGAN, UTAH 84321

UTAH DNR WILDLIFE RESOURCES

McMillen

Blue Stakes of UTAH 811 — Bluestakes.org

WARN WATER AQUACULTURE BUILDING
LOGAN HATCHERY IMPROVEMENT PROJECT
HYBRID STRIPED BASS MODULES 1 AND 2
HYDRAULIC GRADE LINE DIAGRAM

PROJECT NO: 14-23-0005
SHEET NO: PF101
DATE: 10-2023
PAGE NO: 56

SHEET NOTES:

1. EQUIPMENT CALL OUT WITH X AS A PLACE HOLDER ARE BEING USED FOR BOTH MODULE 1 & MODULE 2 (MIRRORED). EQUIPMENT IS INDIVIDUALLY LISTED IN THE EQUIPMENT SCHEDULES.

LEGEND:

RAS SUPPLY (RS)

RAS SUPPLY RETURN (RS)

TANK DRAIN (RR)

TRENCH TO STORM DRAIN

OXYGEN (LOX OR GOX)

FORMALIN (F)

WARM WATER WELLS (WW)

COLD WATER WELLS (CW)

CHILLED WATER (CHW)

HOT WATER LOOP (HW) — HW

VENT TO ATMOSPHERE

V-X33

DG-X01 DEGASSER

BYPASS

V-X34

LHO-X01 LOW HEAD OXYGENTOR

V-X35

OXYGEN FROM BULK STORAGE TANK

CLAY MIXING STATION AND HEAD TANK

PERISTALTIC PUMP

V-X38

V-X36

UV-X01

V-X37

OXYGEN FROM BULK STROAGE TANK

TX01 TX02 TX03 TX04 TX06 TX07 TX08 TX09

HYBRID STRIPED BASS GROW OUT TANKS

TRENCH DRAINS

SIDE DRAINS

C02 SPIKE

VENT TO ATMOSPHERE

BOILER B-101 B-201

PROPANE

7'x6'x5' HIGH

V-X40

DF-X01 DRUM FILTER

T-111 (MODULE 1)
T-209 (MODULE 2)
B-X01

P-X04

LEVEL SENSOR

S

V-X67

V-X81

V-X42 V-X41 V-X76 P-X01

V-X44 V-X43 V-X77 P-X02

V-X78 V-X46 V-X45 P-X03

RAS PUMP

SUMP

MOVING BED BIO REACTOR (MBBR)

MODULE 1 & 2 RAS SYSTEM

SECONDARY COIL HEAT EXCHANGER

BIOFILTER PURGE

SUMP OVERFLOW

BACKWASH

TRENCH DRAINS
STORM DRAINS
OUT FALL

WARM WATER LINE FROM WELL FOR MAKE UP WATER

STORM DRAIN

HOLDING TANK/SOLIDS ACCUMULATOR

TO PONDS OR SOLID CONCENTRATOR

HYBRID STRIPED BASS REARING (MODULE 1 AND 2)

SCALE: NTS

REVIEWED FOR CODE COMPLIANCE
Thomas W Peterson
12/14/2023
DIVISION OF FACILITIES CONSTRUCTION AND MANAGEMENT

DFCM CODE COMPLIANCE OFFICER

NO.	REVISIONS	BY	DATE
	PUBLISHED		
C	100% DESIGN REVIEW	JT	10/23
B	90% DESIGN REVIEW	JT	9/23
A	50% DESIGN REVIEW	JT	5/23

This document or any part thereof in detail or design concept is the property of Forsgren Associates Inc. and shall not be copied without the written authorization of Forsgren Associates Inc.

DRAWN DJ

DESIGNED MEC

APPROVED

QA MLL

ATTENTION

LINE IS 2-INCHES AT 24"x36" SIZE

IF NOT 2-INCHES, SCALE DRAWING ACCORDINGLY

PROFESSIONAL ENGINEER No. 13614104-2202 BRENT WELTON STATE OF UTAH

10/04/2023

FISHERIES EXPERIMENT STATION

UTAH DIVISION OF WILDLIFE RESOURCES

1465 WEST 200 NORTH
LOGAN, UTAH 84321

UTAH DNR WILDLIFE RESOURCES

McMillen

Blue Stakes of UTAH 811 Bluestakes.org

WARN WATER AQUACULTURE BUILDING

LOGAN HATCHERY IMPROVEMENT PROJECT

HYBRID STRIPED BASS RAS MODULE 1 AND 2
PROCESS FLOW SCHEMATIC

PROJECT NO: 14-23-0005

SHEET NO: PF102

DATE: 10-2023

PAGE NO: 57

SHEET NOTES:

1. EQUIPMENT CALL OUT WITH X AS A PLACE HOLDER ARE BEING USED FOR BOTH MODULE 1 & MODULE 2 (MIRRORED). EQUIPMENT IS INDIVIDUALLY LISTED IN THE EQUIPMENT SCHEDULES.

LEGEND:

RAS SUPPLY (RS)

RAS SUPPLY RETURN (RS)

TANK DRAIN (RR)

TRENCH TO STORM DRAIN

OXYGEN (LOX OR GOX)

FORMALIN (F)

WARM WATER WELLS (WW)

COLD WATER WELLS (CW)

CHILLED WATER (CHW)

HOT WATER LOOP (HW) — HW

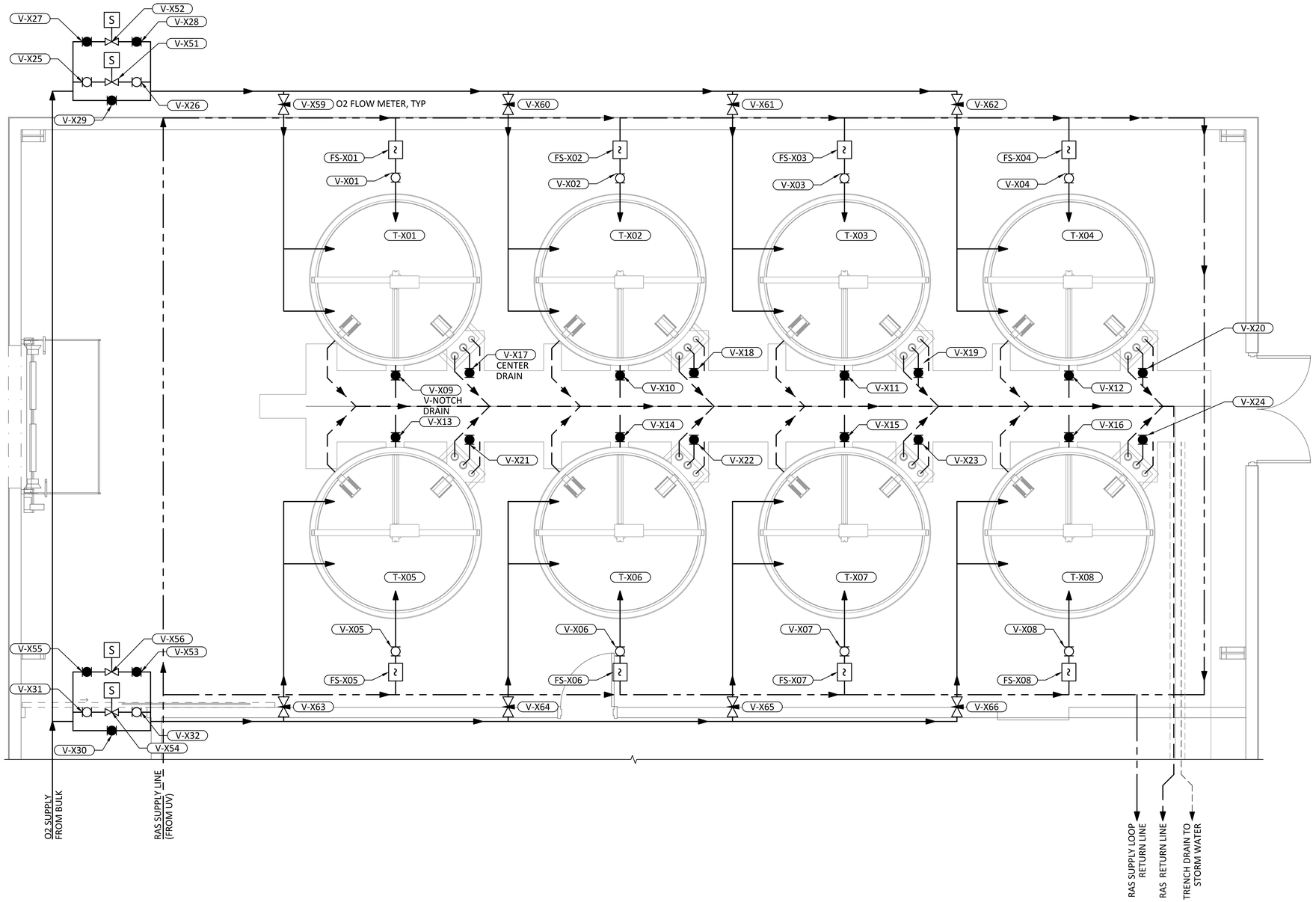

HYBRID STRIPE BASS REARING TANKS
MODULE 1 AND 2 (MIRRORED)

SCALE: NTS

REVIEWED FOR CODE COMPLIANCE
Thomas W Peterson
12/14/2023
DIVISION OF FACILITIES CONSTRUCTION AND MANAGEMENT

DFCM CODE COMPLIANCE OFFICER

NO.	REVISIONS	BY	DATE
C	100% DESIGN REVIEW	JT	10/23
B	90% DESIGN REVIEW	JT	9/23
A	50% DESIGN REVIEW	JT	5/23

PUBLISHED

This document or any part thereof in detail or design concept is the property of Forsgren Associates Inc. and shall not be copied without the written authorization of Forsgren Associates Inc.

DRAWN DJ
DESIGNED MEC
APPROVED
QA MLL

ATTENTION
LINE IS 2-INCHES
AT 24"x36" SIZE
IF NOT 2-INCHES, SCALE DRAWING ACCORDINGLY

PROFESSIONAL ENGINEER
No. 13814104-2202
BRENT WELTON
STATE OF UTAH
10/04/2023

FISHERIES EXPERIMENT STATION
UTAH DIVISION OF WILDLIFE RESOURCES
1465 WEST 200 NORTH
LOGAN, UTAH 84321

UTAH DNR WILDLIFE RESOURCES

McMillen

Blue Stakes of UTAH 811 Bluestakes.org

WARN WATER AQUACULTURE BUILDING
LOGAN HATCHERY IMPROVEMENT PROJECT

HYBRID STRIPED BASS RAS MODULE 1 & 2
TANK DETAIL PROCESS FLOW SCHEMATIC

PROJECT NO: 14-23-0005
SHEET NO: PF103
DATE: 10-2023
PAGE NO: 58

LIST OF KEY POINTS				
KEY POINTS	WATER SURFACE ELEVATION	FLOW (GPM)	PIPE	NOTES
1	4462.80	715	14"	DEGASSER INLET
2	4449.30	715	10"	LHO OUTLET
3	4445.80	65	3"	TANK LEVEL, 65 GPM PER TANK, AT 10 TANKS IS 650 GPM, PLUS ONE TANK AT 65 GPM
4	4445.76	65	-	SIDE DRAIN LEVEL, 65 GPM PER TANK, AT 10 TANKS IS 650 GPM, PLUS ONE TANK AT 65 GPM
5	4445.55	715	10"	DRUM FILTER INLET
6	4445.30	715	10"	DRUM FILTER OUTLET
7	4444.76	715	-	PRE CHAMBER - MBBR
8	4444.71	715	-	MBBR
9	4444.67	715	-	PUMP INTAKE CHAMBER

NOTE: ELEVATION ARE SHOWN WITH THE FLOOR BEING TOS 4442.80'

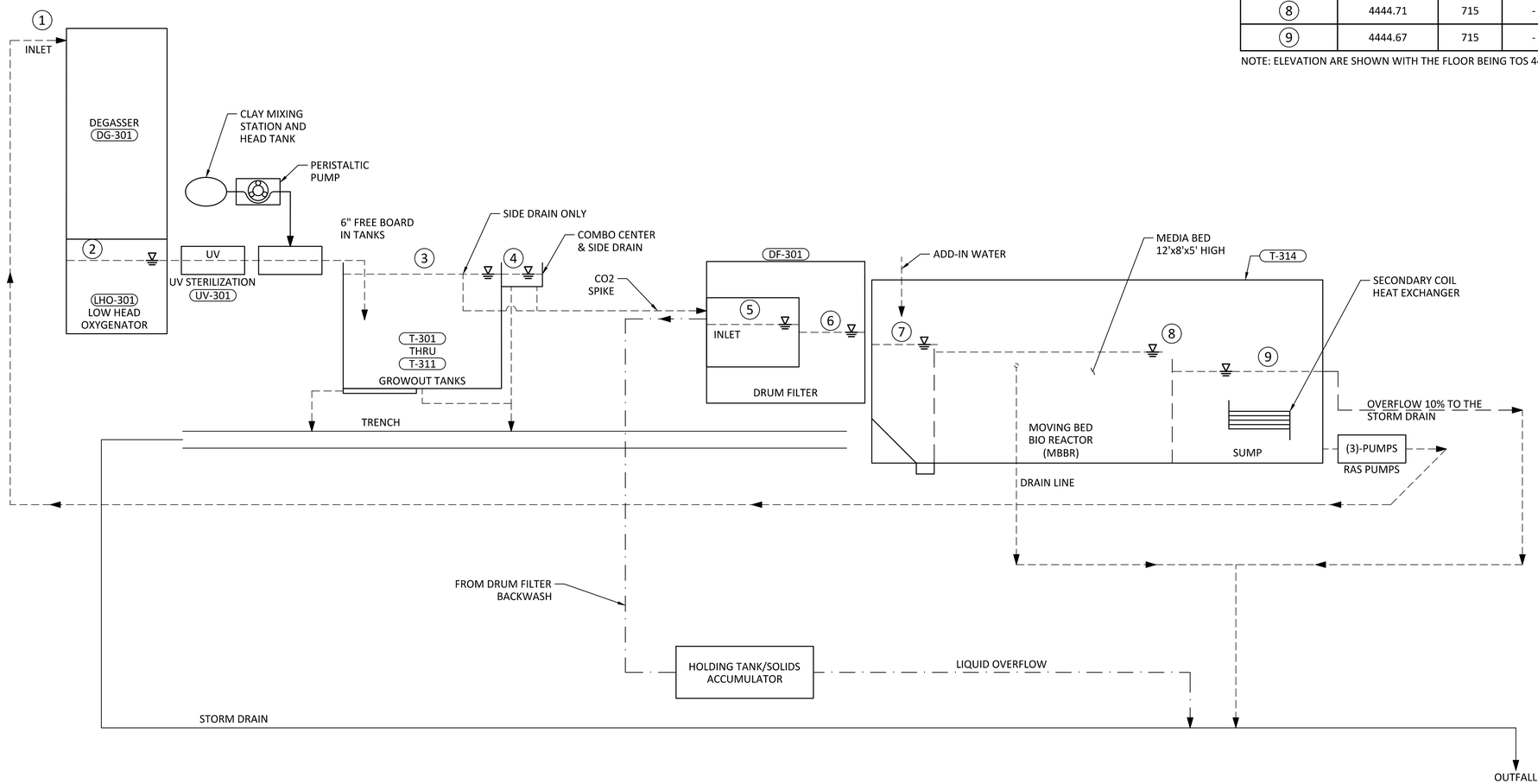

LEGEND:

- RAS SUPPLY (RS)
- RAS SUPPLY RETURN (RS)
- TANK DRAIN (RR)
- TRENCH TO STORM DRAIN
- OXYGEN (LOX OR GOX)
- FORMALIN (F)
- WARM WATER WELLS (WW)
- COLD WATER WELLS (CW)
- CHILLED WATER (CHW)
- HOT WATER LOOP (HW) — HW

WALLEYE REARING
(MODULE 3)

SCALE: NTS

REVIEWED FOR CODE COMPLIANCE
Thomas W Peterson
12/14/2023
DIVISION OF FACILITIES CONSTRUCTION AND MANAGEMENT

DFCM CODE COMPLIANCE OFFICER

NO.	REVISIONS	BY	DATE
	PUBLISHED		
C	100% DESIGN REVIEW	JT	10/23
B	90% DESIGN REVIEW	JT	9/23
A	50% DESIGN REVIEW	JT	5/23

This document or any part thereof in detail or design concept is the property of Forsgren Associates Inc. and shall not be copied without the written authorization of Forsgren Associates Inc.

DRAWN DJ
DESIGNED MEC
APPROVED
QA MLL

ATTENTION
LINE IS 2-INCHES
AT 24"x36" SIZE
IF NOT 2-INCHES, SCALE DRAWING ACCORDINGLY

PROFESSIONAL ENGINEER — No. 13614104-2202 — BRENT WELTON — STATE OF UTAH
10/04/2023

FISHERIES EXPERIMENT STATION
UTAH DIVISION OF WILDLIFE RESOURCES
1465 WEST 200 NORTH
LOGAN, UTAH 84321

UTAH DNR WILDLIFE RESOURCES

McMillen

Blue Stakes of UTAH 811 Bluestakes.org

WARN WATER AQUACULTURE BUILDING
LOGAN HATCHERY IMPROVEMENT PROJECT
WALLEYE RAS MODULE 3
HYDRAULIC GRADE LINE DIAGRAM

PROJECT NO: 14-23-0005
SHEET NO: PF104
DATE: 10-2023
PAGE NO: 59

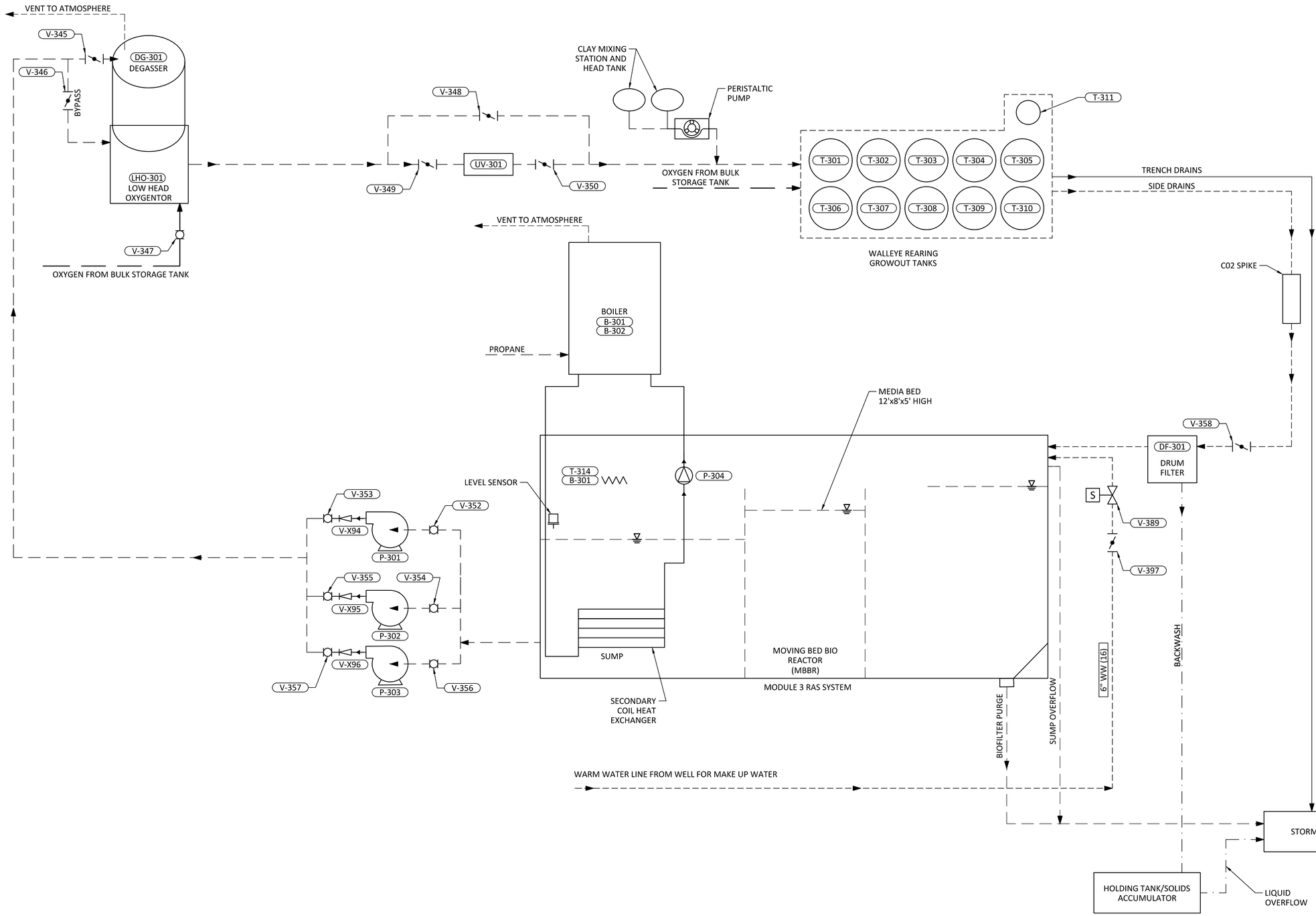

LEGEND:

- RAS SUPPLY (RS)
- RAS SUPPLY RETURN (RS)
- TANK DRAIN (RR)
- TRENCH TO STORM DRAIN
- OXYGEN (LOX OR GOX)
- FORMALIN (F)
- WARM WATER WELLS (WW)
- COLD WATER WELLS (CW)
- CHILLED WATER (CHW)
- HOT WATER LOOP (HW) — HW

WALLEYE REARING (MODULE 3)

SCALE: NTS

REVIEWED FOR CODE COMPLIANCE
Thomas W Peterson
12/1/2023
DIVISION OF FACILITIES CONSTRUCTION AND MANAGEMENT
DFCM CODE COMPLIANCE OFFICER

NO.	REVISIONS	BY	DATE
	PUBLISHED		
C	100% DESIGN REVIEW	JT	10/23
B	90% DESIGN REVIEW	JT	9/23
A	50% DESIGN REVIEW	JT	5/23

This document or any part thereof in detail or design concept is the property of Forsgren Associates Inc. and shall not be copied without the written authorization of Forsgren Associates Inc.

DRAWN DJ
DESIGNED MEC
APPROVED
QA MLL

ATTENTION
LINE IS 2-INCHES
AT 24"x36" SIZE
IF NOT 2-INCHES, SCALE DRAWING ACCORDINGLY

PROFESSIONAL ENGINEER
No. 13614104-2202
BRENT WELTON
STATE OF UTAH
10/04/2023

FISHERIES EXPERIMENT STATION
UTAH DIVISION OF WILDLIFE RESOURCES
1465 WEST 200 NORTH
LOGAN, UTAH 84321

UTAH DNR WILDLIFE RESOURCES

McMillen

Blue Stakes of UTAH 811 Bluestakes.org

WARN WATER AQUACULTURE BUILDING
LOGAN HATCHERY IMPROVEMENT PROJECT

WALLEYE RAS MODULE 3
PROCESS FLOW SCHEMATIC

PROJECT NO: 14-23-0005
SHEET NO: PF105
DATE: 10-2023
PAGE NO: 60

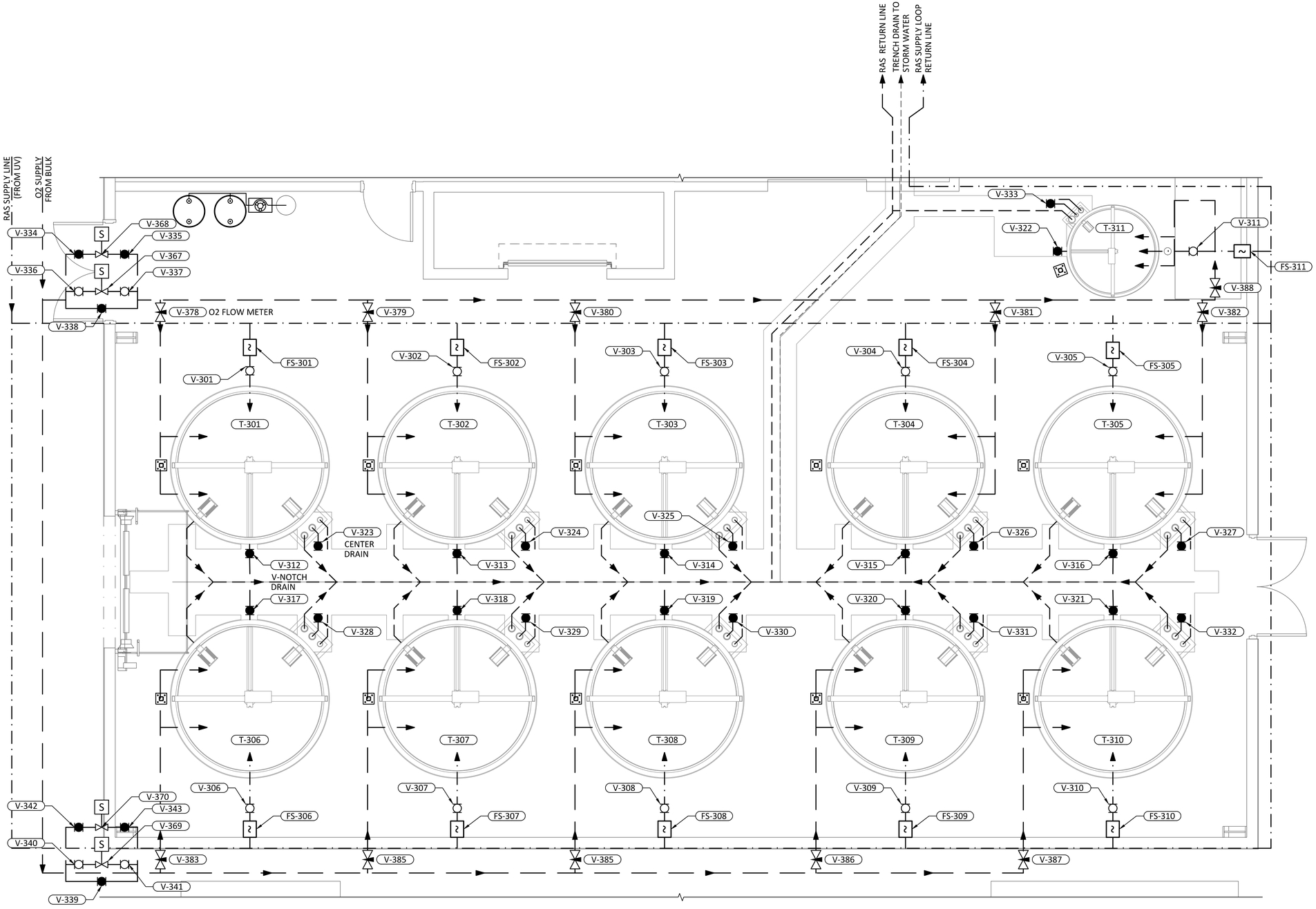

LEGEND:

- RAS SUPPLY (RS)
- RAS SUPPLY RETURN (RS)
- TANK DRAIN (RR)
- TRENCH TO STORM DRAIN
- OXYGEN (LOX OR GOX)
- FORMALIN (F)
- WARM WATER WELLS (WW)
- COLD WATER WELLS (CW)
- CHILLED WATER (CHW)
- HOT WATER LOOP (HW) — HW

WALLEYE REARING (MODULE 3)

SCALE: NTS

REVIEWED FOR CODE COMPLIANCE
Thomas W Peterson
12/14/2023
DIVISION OF FACILITIES CONSTRUCTION AND MANAGEMENT

DFCM CODE COMPLIANCE OFFICER

NO.	REVISIONS	BY	DATE
	PUBLISHED		
C	100% DESIGN REVIEW	JT	10/23
B	90% DESIGN REVIEW	JT	9/23
A	50% DESIGN REVIEW	JT	5/23

This document or any part thereof in detail or design concept is the property of Forsgren Associates Inc. and shall not be copied without the written authorization of Forsgren Associates Inc.

DRAWN DJ
DESIGNED MEC
APPROVED
QA MLL

ATTENTION
LINE IS 2-INCHES AT 24"x36" SIZE
IF NOT 2-INCHES, SCALE DRAWING ACCORDINGLY

PROFESSIONAL ENGINEER — No. 13614104-2202 — BRENT WELTON — STATE OF UTAH
10/04/2023

FISHERIES EXPERIMENT STATION
UTAH DIVISION OF WILDLIFE RESOURCES
1465 WEST 200 NORTH
LOGAN, UTAH 84321

UTAH DNR WILDLIFE RESOURCES

McMillen

Blue Stakes of UTAH 811 Bluestakes.org

WARN WATER AQUACULTURE BUILDING
LOGAN HATCHERY IMPROVEMENT PROJECT

WALLEYE (RAS MODULE 3) TANK DETAIL
PROCESS FLOW SCHEMATIC

PROJECT NO: 14-23-0005
SHEET NO: PF106
DATE: 10-2023
PAGE NO: 61

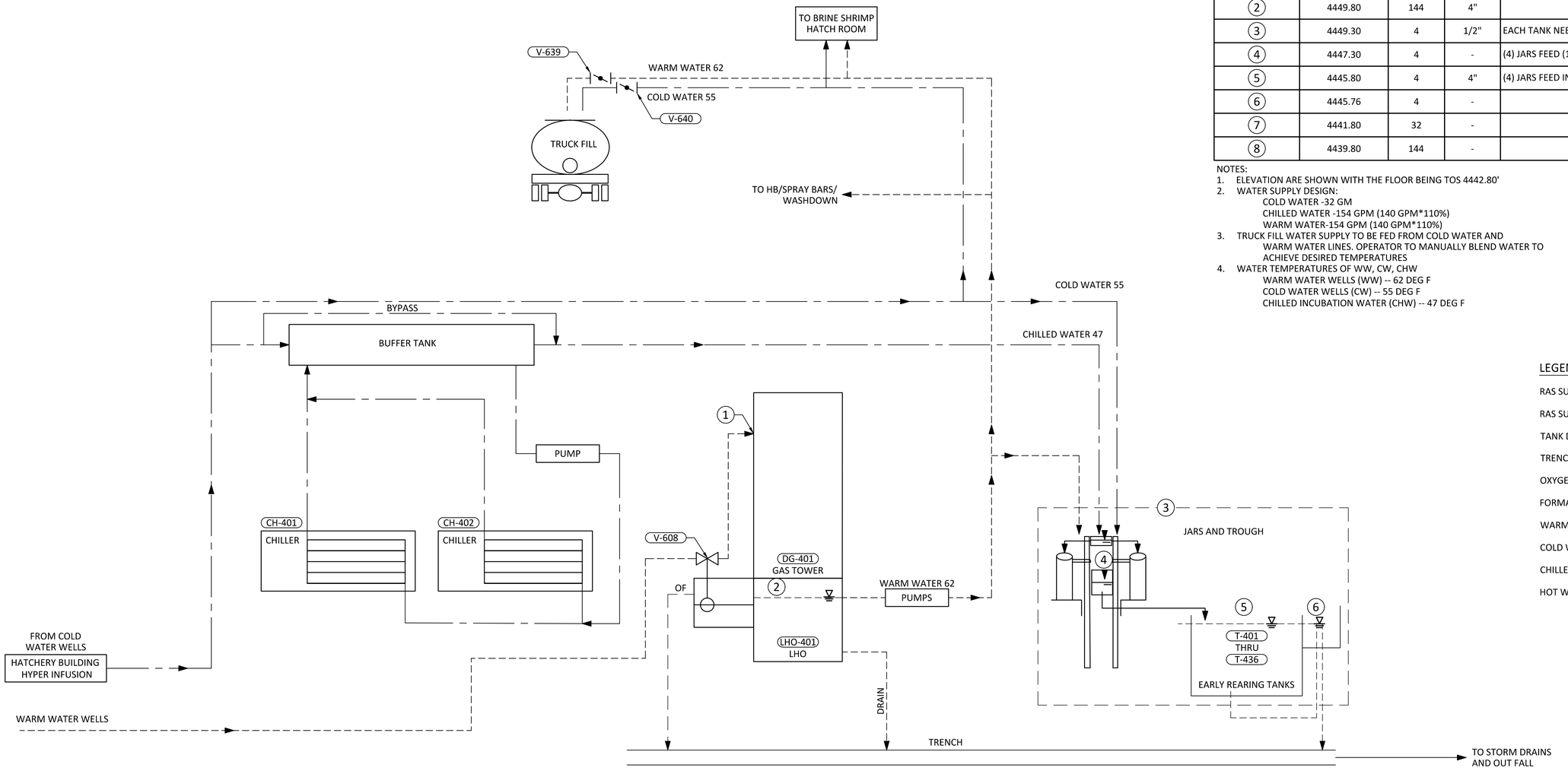

LIST OF KEYS POINT				
KEY POINTS	WATER SURFACE	FLOW (GPM)	PIPE	NOTES
1	4462.81	144	6"	
2	4449.80	144	4"	
3	4449.30	4	1/2"	EACH TANK NEEDS (4) JARS
4	4447.30	4	-	(4) JARS FEED (1) COLLECTION TROUGH
5	4445.80	4	4"	(4) JARS FEED INTO (1) TANK
6	4445.76	4	-	
7	4441.80	32	-	
8	4439.80	144	-	

NOTES:
1. ELEVATION ARE SHOWN WITH THE FLOOR BEING TOS 4442.80'
2. WATER SUPPLY DESIGN:
   COLD WATER -32 GM
   CHILLED WATER -154 GPM (140 GPM*110%)
   WARM WATER-154 GPM (140 GPM*110%)
3. TRUCK FILL WATER SUPPLY TO BE FED FROM COLD WATER AND WARM WATER LINES. OPERATOR TO MANUALLY BLEND WATER TO ACHIEVE DESIRED TEMPERATURES
4. WATER TEMPERATURES OF WW, CW, CHW
   WARM WATER WELLS (WW) -- 62 DEG F
   COLD WATER WELLS (CW) -- 55 DEG F
   CHILLED INCUBATION WATER (CHW) -- 47 DEG F

LEGEND:

- RAS SUPPLY (RS)
- RAS SUPPLY RETURN (RS)
- TANK DRAIN (RR)
- TRENCH TO STORM DRAIN
- OXYGEN (LOX OR GOX)
- FORMALIN (F)
- WARM WATER WELLS (WW)
- COLD WATER WELLS (CW)
- CHILLED WATER (CHW)
- HOT WATER LOOP (HW) — HW

INCUBATION

SCALE: NTS

REVIEWED FOR CODE COMPLIANCE
Thomas W Peterson
12/14/2023
DIVISION OF FACILITIES CONSTRUCTION AND MANAGEMENT

DFCM CODE COMPLIANCE OFFICER

NO.	REVISIONS	BY	DATE
C	100% DESIGN REVIEW	JT	10/23
B	90% DESIGN REVIEW	JT	9/23
A	50% DESIGN REVIEW	JT	5/23

PUBLISHED

This document or any part thereof in detail or design concept is the property of Forsgren Associates Inc. and shall not be copied without the written authorization of Forsgren Associates Inc.

DRAWN DJ
DESIGNED MEC
APPROVED
QA MLL

ATTENTION
LINE IS 2-INCHES AT 24"x36" SIZE
IF NOT 2-INCHES, SCALE DRAWING ACCORDINGLY

PROFESSIONAL ENGINEER No. 13614104-2202 BRENT WELTON STATE OF UTAH
10/04/2023

FISHERIES EXPERIMENT STATION
UTAH DIVISION OF WILDLIFE RESOURCES
1465 WEST 200 NORTH
LOGAN, UTAH 84321

UTAH DNR WILDLIFE RESOURCES

McMillen

Blue Stakes of UTAH 811 bluestakes.org

WARN WATER AQUACULTURE BUILDING
LOGAN HATCHERY IMPROVEMENT PROJECT
WALLEYE INCUBATION
HYDRAULIC GRADE LINE DIAGRAM

PROJECT NO: 14-23-0005
SHEET NO: PF107
DATE: 10-2023
PAGE NO: 62

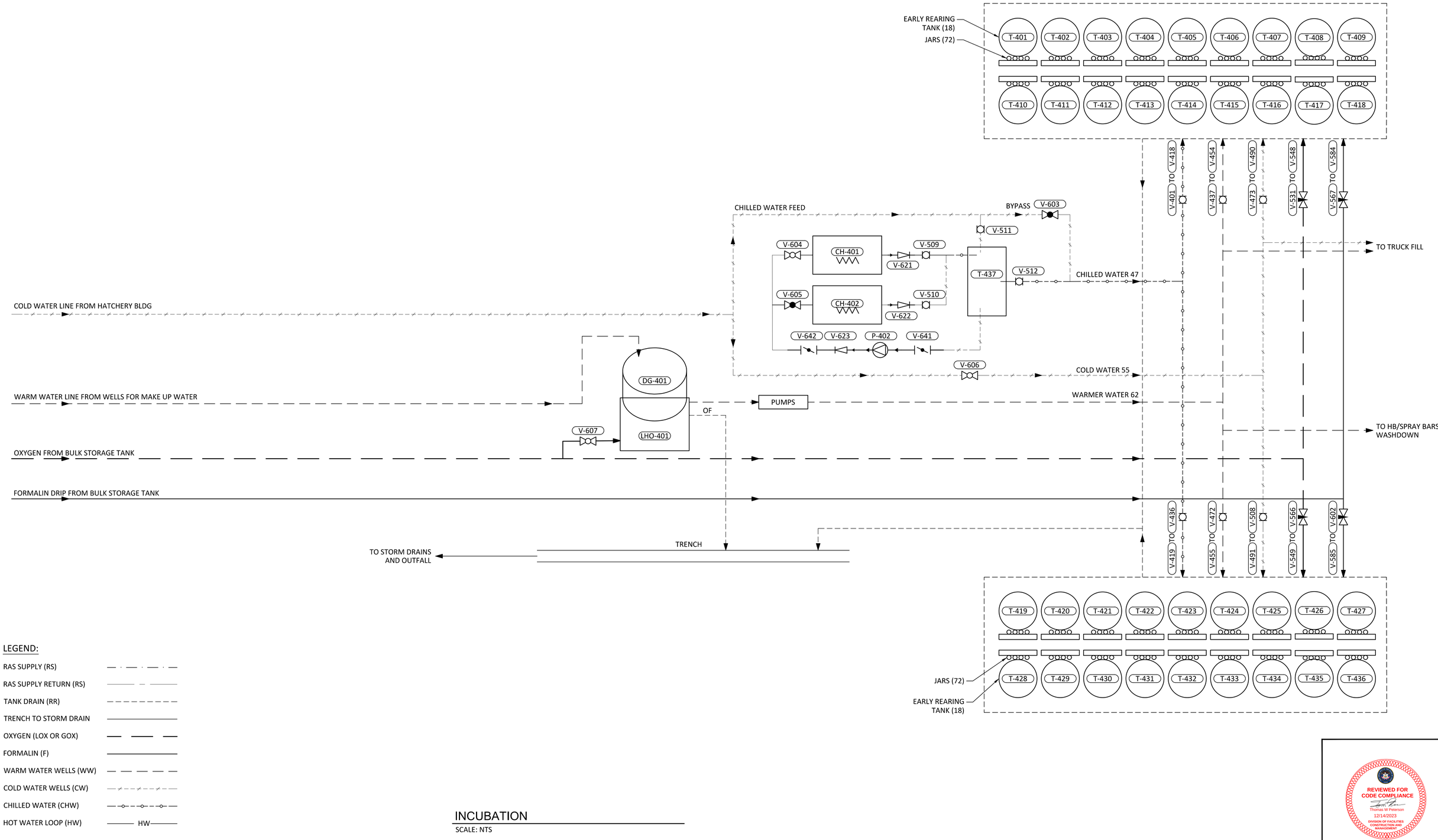

LEGEND:

- RAS SUPPLY (RS)
- RAS SUPPLY RETURN (RS)
- TANK DRAIN (RR)
- TRENCH TO STORM DRAIN
- OXYGEN (LOX OR GOX)
- FORMALIN (F)
- WARM WATER WELLS (WW)
- COLD WATER WELLS (CW)
- CHILLED WATER (CHW)
- HOT WATER LOOP (HW) — HW

INCUBATION

SCALE: NTS

REVIEWED FOR CODE COMPLIANCE
Thomas W Peterson
12/14/2023
DIVISION OF FACILITIES CONSTRUCTION AND MANAGEMENT

DFCM CODE COMPLIANCE OFFICER

	PUBLISHED		
C	100% DESIGN REVIEW	JT	10/23
B	90% DESIGN REVIEW	JT	9/23
A	50% DESIGN REVIEW	JT	5/23
NO.	REVISIONS	BY	DATE

This document or any part thereof in detail or design concept is the property of Forsgren Associates Inc. and shall not be copied without the written authorization of Forsgren Associates Inc.

DRAWN DJ
DESIGNED MEC
APPROVED
QA MLL

ATTENTION
LINE IS 2-INCHES
AT 24"x36" SIZE
IF NOT 2-INCHES, SCALE DRAWING ACCORDINGLY

PROFESSIONAL ENGINEER
No. 13614104-2202
BRENT WELTON
STATE OF UTAH
10/04/2023

FISHERIES EXPERIMENT STATION
UTAH DIVISION OF WILDLIFE RESOURCES
1465 WEST 200 NORTH
LOGAN, UTAH 84321

UTAH DNR WILDLIFE RESOURCES

McMillen

Blue Stakes of UTAH 811 Bluestakes.org

WARN WATER AQUACULTURE BUILDING
LOGAN HATCHERY IMPROVEMENT PROJECT

INCUBATION PROCESS
FLOW SCHEMATIC

PROJECT NO: 14-23-0005
SHEET NO: PF108
DATE: 10-2023
PAGE NO: 63

SHEET NOTES:

1. EACH WATER SUPPLY HAS AN INDIVIDUAL DROP (& BALL VALVE) WHICH PROVIDES WATER TO THE HEAD TANK.
2. TEMPERATURE IN EACH HEAD TANK IS SET MANUALLY BY PROPORTIONALLY SELECTING BETWEEN THE WATER SOURCES.

LEGEND:

RAS SUPPLY (RS)
RAS SUPPLY RETURN (RS)
TANK DRAIN (RR)
TRENCH TO STORM DRAIN
OXYGEN (LOX OR GOX)
FORMALIN (F)
WARM WATER WELLS (WW)
COLD WATER WELLS (CW)
CHILLED WATER (CHW)
HOT WATER LOOP (HW) — HW

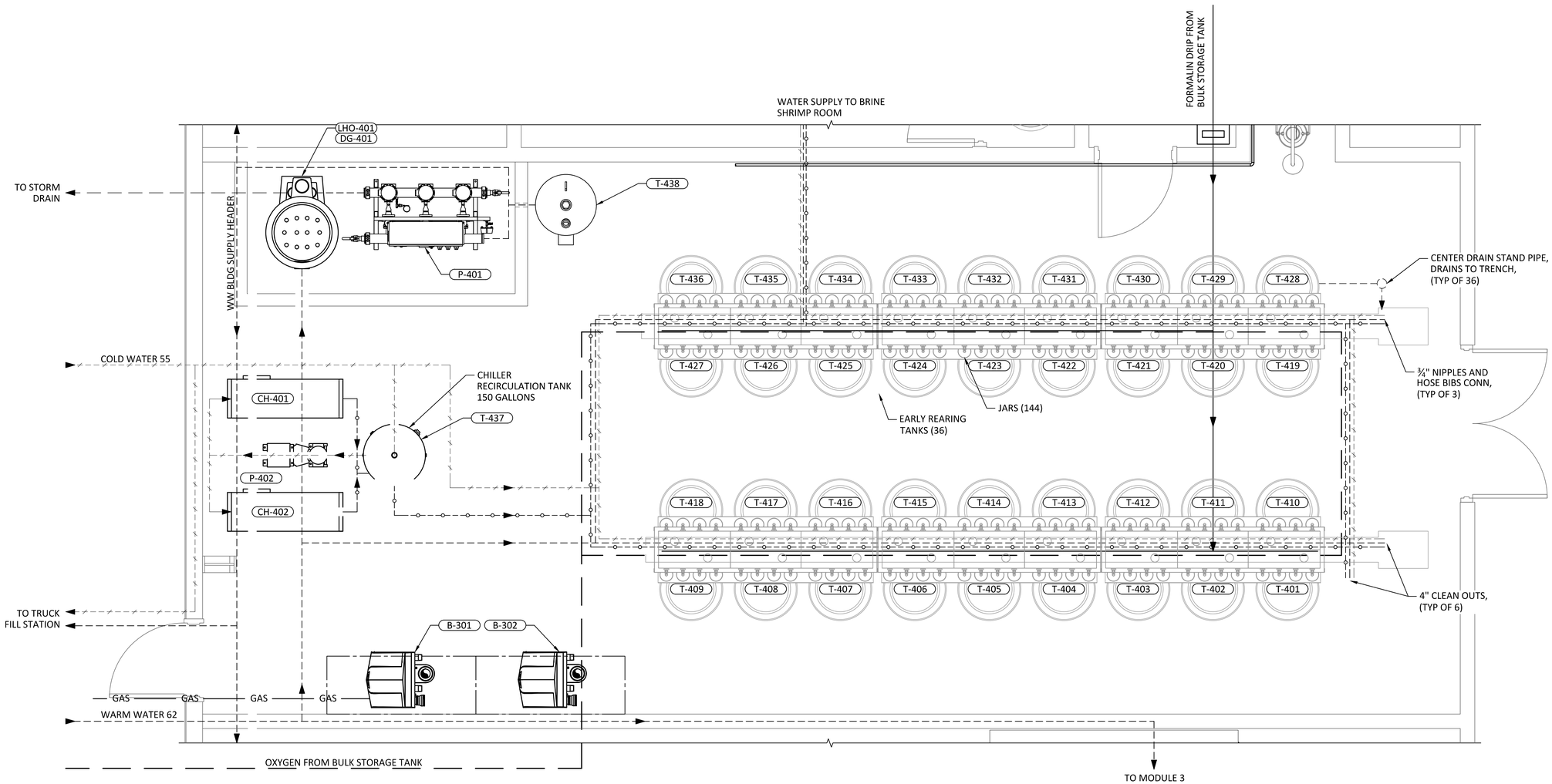

INCUBATION

SCALE: NTS

REVIEWED FOR CODE COMPLIANCE
Thomas W Peterson
12/1/4/2023
DIVISION OF FACILITIES CONSTRUCTION AND MANAGEMENT
DFCM CODE COMPLIANCE OFFICER

NO.	REVISIONS	BY	DATE
	PUBLISHED		
C	100% DESIGN REVIEW	JT	10/23
B	90% DESIGN REVIEW	JT	9/23
A	50% DESIGN REVIEW	JT	5/23

This document or any part thereof in detail or design concept is the property of Forsgren Associates Inc. and shall not be copied without the written authorization of Forsgren Associates Inc.

DRAWN DJ
DESIGNED MEC
APPROVED
QA MLL

ATTENTION
LINE IS 2-INCHES AT 24"x36" SIZE
IF NOT 2-INCHES, SCALE DRAWING ACCORDINGLY

PROFESSIONAL ENGINEER No. 13614104-2202 BRENT WELTON STATE OF UTAH
10/04/2023

FISHERIES EXPERIMENT STATION
UTAH DIVISION OF WILDLIFE RESOURCES
1465 WEST 200 NORTH
LOGAN, UTAH 84321

UTAH DNR WILDLIFE RESOURCES

McMillen

Blue Stakes of UTAH 811 Bluestakes.org

WARN WATER AQUACULTURE BUILDING
LOGAN HATCHERY IMPROVEMENT PROJECT
INCUBATION MODULE TANK DETAIL
PROCESS FLOW SCHEMATIC

PROJECT NO: 14-23-0005
SHEET NO: PF109
DATE: 10-2023
PAGE NO: 64

FLUID ABBREVIATION	FUNCTION	ALLOWABLE PIPING MATERIAL GROUP NO. (SEE NOTE 1 AND 4)				FIELD TEST REQUIREMENTS (SEE NOTE 3 AND NOTE 4)		
	THIS LIST MAY INCLUDE FLUIDS NOT USED IN THIS PROJECT	EXPOSED PIPING (SEE NOTE 14)		BURIED PIPING (SEE NOTE 13)		MINIMUM TEST PRESSURE PSI	TEST MEDIUM	LEAKAGE ALLOWANCE (SEE NOTE 2)
	(* SEE NOTE 5)	3" DIA AND SMALLER	4" DIA AND LARGER	3" DIA AND SMALLER	4" DIA AND LARGER			
COMMONLY USED FUNCTIONS								
AD	AUXILIARY DRAIN	16	16	--	--	150	WATER	(B)
BE	BOILER EXHAUST	15	15	15	15	NOTE 8	--	--
BW	BACKWASH (DRUM FILTER)	16	16	--	--	NOTE 6	WATER	(A)
CHW	CHILLED WATER SUPPLY	2*,24*	2*	2*,24*	2*	125	WATER	(A)
CW	COLD WATER SUPPLY	15,16	15,16	16,31	16,31	125	WATER	(A)
DR	DRAIN (FLOOR)	15,16	15,16	16,27	16,27	NOTE 6	WATER	(D)
F	FORMALIN	15,16	--	16	--	125	WATER	(A)
GOX	OXYGEN GAS	14	14	14	--	MFTR SPEC	N2/AIR	(A), CLEAN FOR 02 SERV
HR	HEATING WATER RETURN	1*,2	1*,2	2	2	125	WATER	(A)
HS	HEATING WATER SUPPLY	1*,2	1*,2	2	2	125	WATER	(A)
NG	NATURAL GAS (SEE NOTE 15)	1	--	31	--	NOTE 7	N2 GAS	(A)
OF	OVERFLOW DRAIN	16	16	--	16,27	25	WATER	(A)
PG	PROPANE GAS	1	--	31	--	NOTE 7	N2 GAS	--
RR	RAS RETURN	16	16	16,31	16.31	125	WATER	(A)
RS	RAS SUPPLY	16	16	16,31	16,31	125	WATER	(A)
SDR	STORM DRAIN	--	2,21	--	20,27	NOTE 6	WATER	(C)
TD	TANK / PROCESS DRAIN (TANK/BASIN)	16	16	16	16,17,27	NOTE 6	WATER	--
VT	VENT	15,16	15,16	--	--	15 IN Hg	VACUUM	(A) (D)
WW	WARM WATER SUPPLY	16	16	16,31	16,31	125	WATER	(A)

PIPING MATERIAL SCHEDULE (SEE NOTE 1)

GROUP NO.	PIPE MATERIAL	FITTINGS / JOINTS	LININGS AND COATINGS (SEE NOTE 13)
1	STEEL, ASTM A53, SCHEDULE 40, BLACK WELDED.	2 1/2" AND SMALLER, MALLEABLE IRON, ASME B16.3, THREADED, BANDED, BLACK, 150 PSI OR STEEL, ASME B16.9, BUTT-WELDED. 3" AND LARGER, CAST IRON, ASME B16.1, 125 PSI FLANGED OR MECHANICAL COUPLING OR (STEEL, ASME B16.9, BUTT WELDED).	NOT APPLICABLE
14	STAINLESS STEEL, TYPE 316, ASTM A312, SCHEDULE 40S.	STAINLESS STEEL, TYPE 316, THREADED, WELDED SLIP-ON FLANGE ASME B16.3, OR SOCKET WELDED FITTINGS SCHEDULE 40S, OR 150 PSIG THREADED FLANGED. (THREADED JOINTS NOT ALLOWED FOR OZG, OXG, LOX SERVICE)	NOT APPLICABLE
15	STAINLESS STEEL, TYPE 316, ASTM A312, SCHEDULE 10S.	STAINLESS STEEL, TYPE 316 WELDED SLIP-ON FLG ASME B16.3, OR SOCKET WELDED FITTINGS SCHEDULE 40S, (NO THREADED JOINTS ALLOWED)	NOT APPLICABLE
16	POLYVINYL CHLORIDE, SCHEDULE 80, NORMAL IMPACT. ASTM D1785. (TYP SERVICE - INDOORS/COVERED)	POLYVINYL CHLORIDE, SCHEDULE 80, NORMAL IMPACT, SOCKET SOLVENT WELD JOINTS, ASTM D2467. (SOLVENT & GLUE SHALL BE COMPATIBLE WITH FLUID SERVICE)	NOT APPLICABLE
17	CHLORINATED POLYVINYL CHLORIDE (CPVC) SCHEDULE. 80, ASTM DI 784 - CLASS 23447-B. (TYP SERVICE - OUTDOORS/EXPOSED)	CPVC, SCHEDULE 80, SOCKET AND SOLVENT WELD JOINTS. (SOLVENT & GLUE COMPATIBLE W/ FLUID SERVICE)	NOT APPLICABLE
20	HIGH DENSITY POLYETHYLENE CORRUGATED NON-PERFORATED, ASTM F40 (ADS N-12 "WATER-TIGHT" PIPE OR EQUAL; PERFORATE WHERE INDICATED. (TYP SERVICE - DRAINAGE & UC)	HIGH DENSITY POLYETHYLENE CORRUGATED. FABRICATED WITH SS CLAMPED CONNECTIONS; FOR WATER-TIGHT SERVICE.	NOT APPLICABLE
24	COPPER, ASTM B88, TYPE K, SOFT TEMPERED WHERE BURIED, HARD TEMPERED WHERE EXPOSED. (TYP SERVICE - COMPRESSED AIR, POTABLE WATER)	WROUGHT COPPER OR CAST BRONZE, ASME B16.22, SOLDER JOINT, 150 PSI, OR COMPRESSION FITTINGS. (FOR OXYGEN PIPING USE SILVER SOLDER, FOR COMPRESSED AIR PIPING USE 95-5 TIN-ANTIMONY SOLDER)	NOT APPLICABLE
27	POLYVINYL CHLORIDE GRAVITY SEWER PIPE, ASTM D3034, SDR_ (TYP SERVICE - SANITARY SEWERS)	POLYVINYL CHLORIDE, ANSI/ASTM D3034, BELL AND/OR SPIGOT.	NOT APPLICABLE
30	SAME AS GROUP NO. 11, OR STEEL ASTM A53, SCHEDULE. 40, GLASS-LINED.	SAME AS GROUP NO. 11, GLASS-LINED OR STEEL, ASME B16.9, SCHEDULE. 40, GROOVED WITH MECH CPLG, GLASS-LINED.	LINING: GLASS (SEE SECTION 331110)
31	HIGH DENSITY POLYETHYLENE (HDPE) ASTM D3350 - DR_ (NOTE 17)	HDPE THERMAL BUTT WELD; FLANGE CONNECTIONS AT ALL VALVES AND TRANSITIONS.	NOT APPLICABLE

TYPICAL PIPE DESIGNATION:

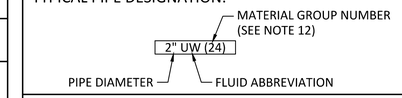

NOTES:

NOTE 1
ALTHOUGH SEVERAL PIPE MATERIAL GROUPS MAY BE LISTED ON THIS SHEET FOR A GIVEN FLUID SERVICE, CONTRACTOR SHALL PROVIDE ONLY THE PIPE MATERIAL GROUP SHOWN ON THE DRAWINGS AND SPECIFIED FOR THAT FLUID SERVICE.

NOTE 2
LEAKAGE ALLOWANCE IS AS FOLLOWS
A. PIPES SO DESIGNATED SHALL SHOW ZERO LEAKAGE.
B. PIPES SO DESIGNATED SHALL SHOW ZERO LEAKAGE FOR UNBURIED PIPE AND NOT MORE THAN 0.02 GALLON PER HOUR PER INCH DIAMETER PER 100 FEET OF BURIED PIPE.
C. PIPES SO DESIGNATED SHALL NOT SHOW A LEAKAGE OF MORE THAN 0.15 GALLON PER HOUR PER INCH OF DIAMETER PER 100 FEET OF PIPE.
D. PIPES SO DESIGNATED SHALL NOT SHOW A LOSS OF PRESSURE OF MORE THAN 5 PERCENT.
E. PIPE SO DESIGNATED SHALL NOT SHOW A LOSS OF VACUUM OF MORE THAN 4 INCHES MERCURY COLUMN.

NOTE 3
FOR FIELD TEST PROCEDURES AND ADDITIONAL TEST REQUIREMENTS, SEE PIPING SECTION OF SPECIFICATIONS.

NOTE 4
NO SUBSTITUTIONS U.N.O. IN THE SPECIFICATIONS.

NOTE 5
PIPING GROUP FUNCTION SHOWN THUS * SHALL BE INSULATED PER SPECIFICATIONS.

NOTE 6
STATIC WATER TEST WITH SURFACE 5 FEET ABOVE HIGH POINT OF PIPE.

NOTE 7
INSPECTION AND TESTING SHALL BE IN ACCORDANCE WITH APPLICABLE PLUMBING CODE.

NOTE 8
NO APPARENT LEAKS UNDER NORMAL OPERATING CONDITIONS.

NOTE 9
NOT USED.

NOTE 10
NOT USED.

NOTE 11
FOR VALVES 4" AND LARGER SEE VALVE SCHEDULE FOR SPECIAL VALVES SEE SPECIFICATIONS.

NOTE 12
CHANGE IN PIPING MATERIAL GROUP NUMBER IS INDICATED THUS: ——◆

NOTE 13
FOR FULL PIPE LINING AND COATING REQUIREMENTS, SEE SPECIFICATIONS.

NOTE 14
EXPOSED OUTDOOR PIPING SHALL BE PAINTED IN ACCORDANCE WITH SPECIFICATIONS. COLORS TO BE SELECTED BY OWNER.

NOTE 15
NATURAL GAS BURIED PIPE SHALL BE POLYETHYLENE BASED PIPE IN ACCORDANCE W/ LOCAL GAS UTILITY PIPE REQUIREMENTS FOR PRESSURE GAS SERVICE.

NOTE 16
ALL FISH RELEASE PIPE BENDS SHALL HAVE A MINIMUM RADIUS OF 5 TIMES THE PIPE DIAMETER. FITTINGS FOR FISH RELEASE PIPE SHALL BE OF THE SAME MATERIAL AS THE PIPING. ALL FISH RELEASE PIPING SHALL BE FREE OF BURRS AND ROUGH SURFACES. ALL PIPING JOINTS SHALL BE SMOOTH AND FREE OF SURFACE BLEMISHES.

NOTE 17
FOR HDPE PIPING THE SIZE OF PIPE SHOWN ON DRAWING CALL-OUTS SHALL BE THE MINIMUM INSIDE DIAMETER. PIPE WALL THICKNESS SHALL BE PER DR RATING REQUIREMENT.

REVIEWED FOR CODE COMPLIANCE
Thomas W Peterson
12/14/2023
DIVISION OF FACILITIES CONSTRUCTION AND MANAGEMENT
DFCM CODE COMPLIANCE OFFICER

NO.	REVISIONS	BY	DATE
C	100% DESIGN REVIEW	JT	10/23
B	90% DESIGN REVIEW	JT	9/23
A	50% DESIGN REVIEW	JT	5/23

PUBLISHED

This document or any part thereof in detail or design concept is the property of Forsgren Associates Inc. and shall not be copied without the written authorization of Forsgren Associates Inc.

DRAWN DJ
DESIGNED MEC
APPROVED
QA MLL

ATTENTION
LINE IS 2-INCHES
AT 24"x36" SIZE
IF NOT 2-INCHES, SCALE DRAWING ACCORDINGLY

PROFESSIONAL ENGINEER — No. 13614104-2202 — BRENT WELTON — STATE OF UTAH
10/04/2023

FISHERIES EXPERIMENT STATION
UTAH DIVISION OF WILDLIFE RESOURCES
1465 WEST 200 NORTH
LOGAN, UTAH 84321

UTAH DNR WILDLIFE RESOURCES

McMillen

Blue Stakes of UTAH 811 Bluestakes.org

WARN WATER AQUACULTURE BUILDING
LOGAN HATCHERY IMPROVEMENT PROJECT

PIPING SCHEDULE

PROJECT NO: 14-23-0005
SHEET NO: GM001
DATE: 10-2023
PAGE NO: 65

PUMP SCHEDULE

EQUIPMENT NUMBER	LOCATION / SERVICE	EQUIPMENT DESCRIPTION	FLOW CAPACITY (GPM) AND TDH (ft)	MOTOR SIZE (hp)	ELECTRICAL SERVICE (V/PH/HZ)	SPEC SECTION	COMMENTS
P-101	MODULE 1/RAS	LOW HEAD PUMP	300 @ 22	3	480/3/60	44 35 24	VFD
P-102	MODULE 1 /RAS	LOW HEAD PUMP	300 @ 22	3	480/3/60	44 35 24	VFD
P-103	MODULE 1/RAS	LOW HEAD PUMP	300 @ 22	3	480/3/60	44 35 24	VFD
P-104	MODULE 1/BOILER	LOW HEAD PUMP	46 @ 3.5	-	115 /1/60	44 35 24	VFD
P-201	MODULE 2/RAS	LOW HEAD PUMP	300 @ 22	3	480/3/60	44 35 24	VFD
P-202	MODULE 2 /RAS	LOW HEAD PUMP	300 @ 22	3	480/3/60	44 35 24	VFD
P-203	MODULE 2/RAS	LOW HEAD PUMP	300 @ 22	3	480/3/60	44 35 24	VFD
P-204	MODULE 2/BOILER	LOW HEAD PUMP	46 @ 3.5	-	115 /1/60	44 35 24	VFD
P-301	MODULE 3/RAS	LOW HEAD PUMP	600 @ 28	5	480/3/60	44 35 24	VFD
P-302	MODULE 3 /RAS	LOW HEAD PUMP	600 @ 28	5	480/3/60	44 35 24	VFD
P-303	MODULE 3/RAS	LOW HEAD PUMP	600 @ 28	5	480/3/60	44 35 24	VFD
P-401	INCUBATION/WARM WATER	BOOSTER PUMP			480/3/60		SKID MOUNTED FROM MFR WITH 3 PUMPS
P-402	INCUBATION/CHILLER	RECIRCULATION PUMP	32 @ 138	-	480/3/60	46 35 55	VFD
P-403	INCUBATION/FORMALIN	PERISTALTIC PUMP	-	-	115 /1/60		VARIABLE FLOW

DEGASSER SCHEDULE

EQUIPMENT NUMBER	LOCATION / SERVICE	EQUIPMENT DESCRIPTION	DESIGN FLOW (GPM)	SIZE	INLET / OUTLET DIA	SPEC SECTION	COMMENTS
DG-101	MODULE 1 / HEADBOX DEGASSER	CO2 STRIPPER	600	48-INCH DIA X 8-FT TALL	10"	44 35 21	SPLASH PLATE STYLE
DG-201	MODULE 2 / HEADBOX DEGASSER	CO2 STRIPPER	600	48-INCH DIA X 8-FT TALL	10"	44 35 21	SPLASH PLATE STYLE
DG-301	MODULE 3 / HEADBOX DEGASSER	CO2 STRIPPER	1,100	72-INCH DIA X 8-FT TALL	14"	44 35 21	SPLASH PLATE STYLE
DG-401	INCUBATION / HEADBOX DEGASSER	CO2 STRIPPER	170	24-INCH DIA X 8-FT TALL	6"	45 35 21	SPLASH PLATE STYLE
LHO-101	MODULE 1/ LHO	LOW HEAD OXYGENATOR	600	48-INCH DIA X 5-FT TALL	8"	44 35 21	SPLASH PLATE STYLE
LHO-201	MODULE 2/ LHO	LOW HEAD OXYGENATOR	600	48-INCH DIA X 5-FT TALL	8"	44 35 21	SPLASH PLATE STYLE
LHO-301	MODULE 3/ LHO	LOW HEAD OXYGENATOR	1,100	72-INCH DIA X 5-FT TALL	10"	44 35 21	SPLASH PLATE STYLE
LHO-401	INCUBATION/LHO	LOW HEAD OXYGENATOR	170	24-INCH DIA X 5-FT TALL	6"	45 35 21	SPLASH PLATE STYLE

MICRO-STRAINER SCHEDULE

EQUIPMENT NUMBER	LOCATION / SERVICE	EQUIPMENT DESCRIPTION	DESIGN FLOW (GPM)	FILTRATION SIZE	INLET SIZE (in)	OUTLET SIZE (in)	COMMENTS
DF-101	MODULE 1 / RAS SYSTEM	MICRO STRAINER	600	50 um	10	10	INCLUDE CARTRIDGE FILTER FOR BACKWASH WATER
DF-201	MODULE 2 / RAS SYSTEM	MICRO STRAINER	600	50 um	10	10	INCLUDE CARTRIDGE FILTER FOR BACKWASH WATER
DF-301	MODULE 3 / RAS SYSTEM	MICRO STRAINER	1,100	50 um	12	12	INCLUDE CARTRIDGE FILTER FOR BACKWASH WATER

UV SCHEDULE

EQUIPMENT NUMBER	LOCATION / SERVICE	EQUIPMENT DESCRIPTION	DESIGN FLOW (GPM)	SIZE	ELECTRICAL SERVICE (V/PH/HZ)	PIPE CONN	COMMENTS
UV-101	MODULE 1 / RAS SYSTEM	UV STERILIZATION	600	100,000 mJ cm2 @ 80% UVT	230/1/60	8" FLG	110-240V, 50/60 Hz, L-L OR L-N, 2W+GND
UV-201	MODULE 2 / RAS SYSTEM	UV STERILIZATION	600	100,000 mJ cm2 @ 80% UVT	230/1/60	8" FLG	110-240V, 50/60 Hz, L-L OR L-N, 2W+GND
UV-301	MODULE 3 / RAS SYSTEM	UV STERILIZATION	1,100	100,000 mJ cm2 @ 80% UVT	230/1/60	10" FLG	110-240V, 50/60 Hz, L-L OR L-N, 2W+GND

BOILER / CHILLER SCHEDULE

EQUIPMENT NUMBER	LOCATION / SERVICE	EQUIPMENT DESCRIPTION	DESIGN FLOW (GPM)	CAPACITY	ELECTRICAL SERVICE (V/PH/HZ)	INLET/OUTLET SIZE (IN)	CONNECTION
B-101	MODULE 1 / RAS	BOILER	60	650,000 BTU/HR	120/1/60	2" OR 2 1/2"	1 1/4" GAS
B-201	MODULE 2 / RAS	BOILER	60	650,000 BTU/HR	120/1/60	2" OR 2 1/2"	1 1/4" GAS
B-301	MODULE 3 / RAS	BOILER	60	650,000 BTU/HR	120/1/60	2" OR 2 1/2"	1 1/4" GAS
B-302	MODULE 3 / RAS	BOILER	60	650,000 BTU/HR	120/1/60	2" OR 2 1/2"	1 1/4" GAS
CH-401	INCUBATION / WATER SUPPLY	CHILLER	32	12.5 TONS / 15,000 BTU/H/43.9 KW	460/3/60	3"	-
CH-402	INCUBATION / WATER SUPPLY	CHILLER	32	12.5 TONS / 15,000 BTU/H/43.9 KW	460/3/61	3"	-

FLOWMETER SCHEDULE

EQUIPMENT NUMBER	LOCATION / SERVICE	EQUIPMENT DESCRIPTION	FLOW CAPACITY (GPM) AND DIAMETER (IN)	BODY LINER MATERIAL	ELECTRICAL SERVICE (V/PH/HZ)	SPEC SECTION	COMMENTS
FM-101	MODULE 1/ RAS SUPPLY FLOW	ELECTROMAGNETIC METER (FULL SPOOL)	0-600/6	POLYURETHANE	120/1/57	40 91 23	PROVIDE GROUND RING KIT
FM-201	MODULE 2/ RAS SUPPLY FLOW	ELECTROMAGNETIC METER (FULL SPOOL)	0-600/6	POLYURETHANE	120/1/58	40 91 23	PROVIDE GROUND RING KIT
FM-301	MODULE 3/ RAS SUPPLY FLOW	ELECTROMAGNETIC METER (FULL SPOOL)	0-1150/8	POLYURETHANE	120/1/59	40 91 23	PROVIDE GROUND RING KIT
FM-102	MODULE 1 / RAS SUPPLY RETURN LINE	ELECTROMAGNETIC METER (FULL SPOOL)	0 - 60/2	POLYURETHANE	120/1/60	40 91 23	PROVIDE GROUND RING KIT
FM-202	MODULE 2 / RAS SUPPLY RETURN LINE	ELECTROMAGNETIC METER (FULL SPOOL)	0 - 60/2	POLYURETHANE	120/1/60	40 91 23	PROVIDE GROUND RING KIT
FM-302	MODULE 3 / RAS SUPPLY RETURN LINE	ELECTROMAGNETIC METER (FULL SPOOL)	0 - 60/2	POLYURETHANE	120/1/60	40 91 23	PROVIDE GROUND RING KIT
FM-103	MODULE 1 / MAKEUP WATER	ELECTROMAGNETIC METER (FULL SPOOL)	0-100/ 3	POLYURETHANE	120/1/60	40 91 23	PROVIDE GROUND RING KIT
FM-203	MODULE 2 / MAKEUP WATER	ELECTROMAGNETIC METER (FULL SPOOL)	0-100/ 3	POLYURETHANE	120/1/60	40 91 23	PROVIDE GROUND RING KIT
FM-303	MODULE 3 / MAKEUP WATER	ELECTROMAGNETIC METER (FULL SPOOL)	0-150/ 4	POLYURETHANE	120/1/60	40 91 23	PROVIDE GROUND RING KIT
FM-401	INCUBATION / WARM WATER SUPPLY	ELECTROMAGNETIC METER (FULL SPOOL)	0-160/ 4	POLYURETHANE	120/1/60	40 91 23	PROVIDE GROUND RING KIT
FM-402	INCUBATION / COLD WATER SUPPLY	ELECTROMAGNETIC METER (FULL SPOOL)	0-160/ 4	POLYURETHANE	120/1/60	40 91 23	PROVIDE GROUND RING KIT
FM-403	INCUBATION / CHILLED WATER SUPPLY	ELECTROMAGNETIC METER (FULL SPOOL)	0-40/ 2	POLYURETHANE	120/1/60	40 91 23	PROVIDE GROUND RING KIT

FLOW SWITCH SCHEDULE

EQUIPMENT NUMBER	LOCATION / SERVICE	EQUIPMENT DESCRIPTION	DEAD BAND	BODY LINER MATERIAL	ELECTRICAL SERVICE	COMMENTS
FS-101	MOD 1/ TANK 1	THREMAL FLOW SWITCH	0.1 FT/S +15% OF SETPOINT	316 SS	9-24 VDC	10% INSERTION INTO THE FLOW
FS-102	MOD 1/ TANK 2	THREMAL FLOW SWITCH	0.1 FT/S +15% OF SETPOINT	316 SS	9-24 VDC	10% INSERTION INTO THE FLOW
FS-103	MOD 1/ TANK 3	THREMAL FLOW SWITCH	0.1 FT/S +15% OF SETPOINT	316 SS	9-24 VDC	10% INSERTION INTO THE FLOW
FS-104	MOD 1/ TANK 4	THREMAL FLOW SWITCH	0.1 FT/S +15% OF SETPOINT	316 SS	9-24 VDC	10% INSERTION INTO THE FLOW
FS-105	MOD 1/ TANK 5	THREMAL FLOW SWITCH	0.1 FT/S +15% OF SETPOINT	316 SS	9-24 VDC	10% INSERTION INTO THE FLOW
FS-106	MOD 1/ TANK 6	THREMAL FLOW SWITCH	0.1 FT/S +15% OF SETPOINT	316 SS	9-24 VDC	10% INSERTION INTO THE FLOW
FS-107	MOD 1/ TANK 7	THREMAL FLOW SWITCH	0.1 FT/S +15% OF SETPOINT	316 SS	9-24 VDC	10% INSERTION INTO THE FLOW
FS-108	MOD 1/ TANK 8	THREMAL FLOW SWITCH	0.1 FT/S +15% OF SETPOINT	316 SS	9-24 VDC	10% INSERTION INTO THE FLOW
FS-201	MOD 2/ TANK 1	THREMAL FLOW SWITCH	0.1 FT/S +15% OF SETPOINT	316 SS	9-24 VDC	10% INSERTION INTO THE FLOW
FS-202	MOD 2/ TANK 2	THREMAL FLOW SWITCH	0.1 FT/S +15% OF SETPOINT	316 SS	9-24 VDC	10% INSERTION INTO THE FLOW
FS-203	MOD 2/ TANK 3	THREMAL FLOW SWITCH	0.1 FT/S +15% OF SETPOINT	316 SS	9-24 VDC	10% INSERTION INTO THE FLOW
FS-204	MOD 2/ TANK 4	THREMAL FLOW SWITCH	0.1 FT/S +15% OF SETPOINT	316 SS	9-24 VDC	10% INSERTION INTO THE FLOW
FS-205	MOD 2/ TANK 5	THREMAL FLOW SWITCH	0.1 FT/S +15% OF SETPOINT	316 SS	9-24 VDC	10% INSERTION INTO THE FLOW
FS-206	MOD 2/ TANK 6	THREMAL FLOW SWITCH	0.1 FT/S +15% OF SETPOINT	316 SS	9-24 VDC	10% INSERTION INTO THE FLOW
FS-207	MOD 2/ TANK 7	THREMAL FLOW SWITCH	0.1 FT/S +15% OF SETPOINT	316 SS	9-24 VDC	10% INSERTION INTO THE FLOW
FS-208	MOD 2/ TANK 8	THREMAL FLOW SWITCH	0.1 FT/S +15% OF SETPOINT	316 SS	9-24 VDC	10% INSERTION INTO THE FLOW
FS-301	MOD 3/ TANK 1	THREMAL FLOW SWITCH	0.1 FT/S +15% OF SETPOINT	316 SS	9-24 VDC	10% INSERTION INTO THE FLOW
FS-302	MOD 3/ TANK 2	THREMAL FLOW SWITCH	0.1 FT/S +15% OF SETPOINT	316 SS	9-24 VDC	10% INSERTION INTO THE FLOW
FS-303	MOD 3/ TANK 3	THREMAL FLOW SWITCH	0.1 FT/S +15% OF SETPOINT	316 SS	9-24 VDC	10% INSERTION INTO THE FLOW
FS-304	MOD 3/ TANK 4	THREMAL FLOW SWITCH	0.1 FT/S +15% OF SETPOINT	316 SS	9-24 VDC	10% INSERTION INTO THE FLOW
FS-305	MOD 3/ TANK 5	THREMAL FLOW SWITCH	0.1 FT/S +15% OF SETPOINT	316 SS	9-24 VDC	10% INSERTION INTO THE FLOW
FS-306	MOD 3/ TANK 6	THREMAL FLOW SWITCH	0.1 FT/S +15% OF SETPOINT	316 SS	9-24 VDC	10% INSERTION INTO THE FLOW
FS-307	MOD 3/ TANK 7	THREMAL FLOW SWITCH	0.1 FT/S +15% OF SETPOINT	316 SS	9-24 VDC	10% INSERTION INTO THE FLOW
FS-308	MOD 3/ TANK 8	THREMAL FLOW SWITCH	0.1 FT/S +15% OF SETPOINT	316 SS	9-24 VDC	10% INSERTION INTO THE FLOW
FS-309	MOD 3/ TANK 9	THREMAL FLOW SWITCH	0.1 FT/S +15% OF SETPOINT	316 SS	9-24 VDC	10% INSERTION INTO THE FLOW
FS-310	MOD 3/ TANK 10	THREMAL FLOW SWITCH	0.1 FT/S +15% OF SETPOINT	316 SS	9-24 VDC	10% INSERTION INTO THE FLOW
FS-311	MOD 3/ TANK 11	THREMAL FLOW SWITCH	0.1 FT/S +15% OF SETPOINT	316 SS	9-24 VDC	10% INSERTION INTO THE FLOW

REVIEWED FOR CODE COMPLIANCE
Thomas W Peterson
12/14/2023
DIVISION OF FACILITIES CONSTRUCTION AND MANAGEMENT

DFCM CODE COMPLIANCE OFFICER

NO.	REVISIONS	BY	DATE
	PUBLISHED		
C	100% DESIGN REVIEW	JT	10/23
B	90% DESIGN REVIEW	JT	9/23
A	50% DESIGN REVIEW	JT	5/23

This document or any part thereof in detail or design concept is the property of Forsgren Associates Inc. and shall not be copied without the written authorization of Forsgren Associates Inc.

DRAWN DJ
DESIGNED MEC
APPROVED
QA MLL

ATTENTION
LINE IS 2-INCHES
AT 24"x36" SIZE
IF NOT 2-INCHES, SCALE DRAWING ACCORDINGLY

PROFESSIONAL ENGINEER — No. 13614104-2202 — BRENT WELTON — STATE OF UTAH
10/04/2023

FISHERIES EXPERIMENT STATION
UTAH DIVISION OF WILDLIFE RESOURCES
1465 WEST 200 NORTH
LOGAN, UTAH 84321

UTAH DNR WILDLIFE RESOURCES

McMillen

Blue Stakes of UTAH 811 — Bluestakes.org

WARN WATER AQUACULTURE BUILDING
LOGAN HATCHERY IMPROVEMENT PROJECT

MECHANICAL SCHEDULE 1

PROJECT NO: 14-23-0005
SHEET NO: GM002
DATE: 10-2023
PAGE NO: 66

TANK SCHEDULE							
EQUIPMENT NUMBER	LOCATION / SERVICE	EQUIPMENT DESCRIPTION	DESIGN FLOW (GPM)	SIZE	INLET (in)	SPEC SECTION	COMMENTS
T-101	MODULE 1 / HSB (HYBRID STRIPED BASS)	GROWOUT TANK #1	63	9' DIA X 4.5' DEEP	2X 4"	11 94 01	TANK HAS DESIGNED 0'-6" FREEBOARD
T-102	MODULE 1 / HSB (HYBRID STRIPED BASS)	GROWOUT TANK #2	63	9' DIA X 4.5' DEEP	2X 4"	11 94 01	TANK HAS DESIGNED 0'-6" FREEBOARD
T-103	MODULE 1 / HSB (HYBRID STRIPED BASS)	GROWOUT TANK #3	63	9' DIA X 4.5' DEEP	2X 4"	11 94 01	TANK HAS DESIGNED 0'-6" FREEBOARD
T-104	MODULE 1 / HSB (HYBRID STRIPED BASS)	GROWOUT TANK #4	63	9' DIA X 4.5' DEEP	2X 4"	11 94 01	TANK HAS DESIGNED 0'-6" FREEBOARD
T-105	MODULE 1 / HSB (HYBRID STRIPED BASS)	GROWOUT TANK #5	63	9' DIA X 4.5' DEEP	2X 4"	11 94 01	TANK HAS DESIGNED 0'-6" FREEBOARD
T-106	MODULE 1 / HSB (HYBRID STRIPED BASS)	GROWOUT TANK #6	63	9' DIA X 4.5' DEEP	2X 4"	11 94 01	TANK HAS DESIGNED 0'-6" FREEBOARD
T-107	MODULE 1 / HSB (HYBRID STRIPED BASS)	GROWOUT TANK #7	63	9' DIA X 4.5' DEEP	2X 4"	11 94 01	TANK HAS DESIGNED 0'-6" FREEBOARD
T-108	MODULE 1 / HSB (HYBRID STRIPED BASS)	GROWOUT TANK #8	63	9' DIA X 4.5' DEEP	2X 4"	11 94 01	TANK HAS DESIGNED 0'-6" FREEBOARD
T-109	MODULE 1&2 / PROCESS WATER	PROCESS DRAIN SUMP	120	6' X 6' X 5' DEEP	-	11 94 01	
T-111	MODULE 1 / MMBR TANK	MBBR TANK	600	12' X 6' X 5' DEEP	-	11 94 01	
T-201	MODULE 2 / HSB (HYBRID STRIPED BASS)	GROWOUT TANK #1	63	9' DIA X 4.5' DEEP	2X 4"	11 94 01	TANK HAS DESIGNED 0'-6" FREEBOARD
T-202	MODULE 2 / HSB (HYBRID STRIPED BASS)	GROWOUT TANK #2	63	9' DIA X 4.5' DEEP	2X 4"	11 94 01	TANK HAS DESIGNED 0'-6" FREEBOARD
T-203	MODULE 2 / HSB (HYBRID STRIPED BASS)	GROWOUT TANK #3	63	9' DIA X 4.5' DEEP	2X 4"	11 94 01	TANK HAS DESIGNED 0'-6" FREEBOARD
T-204	MODULE 2 / HSB (HYBRID STRIPED BASS)	GROWOUT TANK #4	63	9' DIA X 4.5' DEEP	2X 4"	11 94 01	TANK HAS DESIGNED 0'-6" FREEBOARD
T-205	MODULE 2 / HSB (HYBRID STRIPED BASS)	GROWOUT TANK #5	63	9' DIA X 4.5' DEEP	2X 4"	11 94 01	TANK HAS DESIGNED 0'-6" FREEBOARD
T-206	MODULE 2 / HSB (HYBRID STRIPED BASS)	GROWOUT TANK #6	63	9' DIA X 4.5' DEEP	2X 4"	11 94 01	TANK HAS DESIGNED 0'-6" FREEBOARD
T-207	MODULE 2 / HSB (HYBRID STRIPED BASS)	GROWOUT TANK #7	63	9' DIA X 4.5' DEEP	2X 4"	11 94 01	TANK HAS DESIGNED 0'-6" FREEBOARD
T-208	MODULE 2 / HSB (HYBRID STRIPED BASS)	GROWOUT TANK #8	63	9' DIA X 4.5' DEEP	2X 4"	11 94 01	TANK HAS DESIGNED 0'-6" FREEBOARD
T-209	MODULE 2 / MMBR TANK	MBBR TANK	600	12' X 6' X 5' DEEP	-	11 94 01	
T-301	MODULE 3 / HSB (HYBRID STRIPED BASS)	GROWOUT TANK #1	63	9' DIA X 4.5' DEEP	2X 4"	11 94 01	TANK HAS DESIGNED 0'-6" FREEBOARD
T-302	MODULE 3 / HSB (HYBRID STRIPED BASS)	GROWOUT TANK #2	63	9' DIA X 4.5' DEEP	2X 4"	11 94 01	TANK HAS DESIGNED 0'-6" FREEBOARD
T-303	MODULE 3 / HSB (HYBRID STRIPED BASS)	GROWOUT TANK #3	63	9' DIA X 4.5' DEEP	2X 4"	11 94 01	TANK HAS DESIGNED 0'-6" FREEBOARD
T-304	MODULE 3 / HSB (HYBRID STRIPED BASS)	GROWOUT TANK #4	63	9' DIA X 4.5' DEEP	2X 4"	11 94 01	TANK HAS DESIGNED 0'-6" FREEBOARD
T-305	MODULE 3 / HSB (HYBRID STRIPED BASS)	GROWOUT TANK #5	63	9' DIA X 4.5' DEEP	2X 4"	11 94 01	TANK HAS DESIGNED 0'-6" FREEBOARD
T-306	MODULE 3 / HSB (HYBRID STRIPED BASS)	GROWOUT TANK #6	63	9' DIA X 4.5' DEEP	2X 4"	11 94 01	TANK HAS DESIGNED 0'-6" FREEBOARD
T-307	MODULE 3 / HSB (HYBRID STRIPED BASS)	GROWOUT TANK #7	63	9' DIA X 4.5' DEEP	2X 4"	11 94 01	TANK HAS DESIGNED 0'-6" FREEBOARD
T-308	MODULE 3 / HSB (HYBRID STRIPED BASS)	GROWOUT TANK #8	63	9' DIA X 4.5' DEEP	2X 4"	11 94 01	TANK HAS DESIGNED 0'-6" FREEBOARD
T-309	MODULE 3 / HSB (HYBRID STRIPED BASS)	GROWOUT TANK #9	63	9' DIA X 4.5' DEEP	2X 4"	11 94 01	TANK HAS DESIGNED 0'-6" FREEBOARD
T-310	MODULE 3 / HSB (HYBRID STRIPED BASS)	GROWOUT TANK #10	63	9' DIA X 4.5' DEEP	2X 4"	11 94 01	TANK HAS DESIGNED 0'-6" FREEBOARD
T-311	MODULE 3 / HSB (HYBRID STRIPED BASS)	GROWOUT TANK #11	30	5' DIA X 4.5' DEEP	2X 4"	11 94 01	TANK HAS DESIGNED 0'-6" FREEBOARD
T-312	MODULE 3 / PROCESS WATER	PROCESS DRAIN SUMP	110	3' X 8' X 5' DEEP	-	11 94 01	
T-314	MODULE 3 / MMBR TANK	MBBR TANK	600	20' X 8' X 5' DEEP	-	11 94 01	

TANK SCHEDULE							
EQUIPMENT NUMBER	LOCATION / SERVICE	EQUIPMENT DESCRIPTION	DESIGN FLOW (GPM)	SIZE	INLET (in)	SPEC SECTION	COMMENTS
T-401	MODULE 4 / INCUBATION ROOM	EARLY REARING TANK #1	4	2' DIA X 2' DEEP	3"	11 94 01	TANK HAS DESIGNED 0'-6" FREEBOARD
T-402	MODULE 4 / INCUBATION ROOM	EARLY REARING TANK #2	4	2' DIA X 2' DEEP	3"	11 94 01	TANK HAS DESIGNED 0'-6" FREEBOARD
T-403	MODULE 4 / INCUBATION ROOM	EARLY REARING TANK #3	4	2' DIA X 2' DEEP	3"	11 94 01	TANK HAS DESIGNED 0'-6" FREEBOARD
T-404	MODULE 4 / INCUBATION ROOM	EARLY REARING TANK #4	4	2' DIA X 2' DEEP	3"	11 94 01	TANK HAS DESIGNED 0'-6" FREEBOARD
T-405	MODULE 4 / INCUBATION ROOM	EARLY REARING TANK #5	4	2' DIA X 2' DEEP	3"	11 94 01	TANK HAS DESIGNED 0'-6" FREEBOARD
T-406	MODULE 4 / INCUBATION ROOM	EARLY REARING TANK #6	4	2' DIA X 2' DEEP	3"	11 94 01	TANK HAS DESIGNED 0'-6" FREEBOARD
T-407	MODULE 4 / INCUBATION ROOM	EARLY REARING TANK #7	4	2' DIA X 2' DEEP	3"	11 94 01	TANK HAS DESIGNED 0'-6" FREEBOARD
T-408	MODULE 4 / INCUBATION ROOM	EARLY REARING TANK #8	4	2' DIA X 2' DEEP	3"	11 94 01	TANK HAS DESIGNED 0'-6" FREEBOARD
T-409	MODULE 4 / INCUBATION ROOM	EARLY REARING TANK #9	4	2' DIA X 2' DEEP	3"	11 94 01	TANK HAS DESIGNED 0'-6" FREEBOARD
T-410	MODULE 4 / INCUBATION ROOM	EARLY REARING TANK #10	4	2' DIA X 2' DEEP	3"	11 94 01	TANK HAS DESIGNED 0'-6" FREEBOARD
T-411	MODULE 4 / INCUBATION ROOM	EARLY REARING TANK #11	4	2' DIA X 2' DEEP	3"	11 94 01	TANK HAS DESIGNED 0'-6" FREEBOARD
T-412	MODULE 4 / INCUBATION ROOM	EARLY REARING TANK #12	4	2' DIA X 2' DEEP	3"	11 94 01	TANK HAS DESIGNED 0'-6" FREEBOARD
T-413	MODULE 4 / INCUBATION ROOM	EARLY REARING TANK #13	4	2' DIA X 2' DEEP	3"	11 94 01	TANK HAS DESIGNED 0'-6" FREEBOARD
T-414	MODULE 4 / INCUBATION ROOM	EARLY REARING TANK #14	4	2' DIA X 2' DEEP	3"	11 94 01	TANK HAS DESIGNED 0'-6" FREEBOARD
T-415	MODULE 4 / INCUBATION ROOM	EARLY REARING TANK #15	4	2' DIA X 2' DEEP	3"	11 94 01	TANK HAS DESIGNED 0'-6" FREEBOARD
T-416	MODULE 4 / INCUBATION ROOM	EARLY REARING TANK #16	4	2' DIA X 2' DEEP	3"	11 94 01	TANK HAS DESIGNED 0'-6" FREEBOARD
T-417	MODULE 4 / INCUBATION ROOM	EARLY REARING TANK #17	4	2' DIA X 2' DEEP	3"	11 94 01	TANK HAS DESIGNED 0'-6" FREEBOARD
T-418	MODULE 4 / INCUBATION ROOM	EARLY REARING TANK #18	4	2' DIA X 2' DEEP	3"	11 94 01	TANK HAS DESIGNED 0'-6" FREEBOARD
T-419	MODULE 4 / INCUBATION ROOM	EARLY REARING TANK #19	4	2' DIA X 2' DEEP	3"	11 94 01	TANK HAS DESIGNED 0'-6" FREEBOARD
T-420	MODULE 4 / INCUBATION ROOM	EARLY REARING TANK #20	4	2' DIA X 2' DEEP	3"	11 94 01	TANK HAS DESIGNED 0'-6" FREEBOARD
T-421	MODULE 4 / INCUBATION ROOM	EARLY REARING TANK #21	4	2' DIA X 2' DEEP	3"	11 94 01	TANK HAS DESIGNED 0'-6" FREEBOARD
T-422	MODULE 4 / INCUBATION ROOM	EARLY REARING TANK #22	4	2' DIA X 2' DEEP	3"	11 94 01	TANK HAS DESIGNED 0'-6" FREEBOARD
T-423	MODULE 4 / INCUBATION ROOM	EARLY REARING TANK #23	4	2' DIA X 2' DEEP	3"	11 94 01	TANK HAS DESIGNED 0'-6" FREEBOARD
T-424	MODULE 4 / INCUBATION ROOM	EARLY REARING TANK #24	4	2' DIA X 2' DEEP	3"	11 94 01	TANK HAS DESIGNED 0'-6" FREEBOARD
T-425	MODULE 4 / INCUBATION ROOM	EARLY REARING TANK #25	4	2' DIA X 2' DEEP	3"	11 94 01	TANK HAS DESIGNED 0'-6" FREEBOARD
T-426	MODULE 4 / INCUBATION ROOM	EARLY REARING TANK #26	4	2' DIA X 2' DEEP	3"	11 94 01	TANK HAS DESIGNED 0'-6" FREEBOARD
T-427	MODULE 4 / INCUBATION ROOM	EARLY REARING TANK #27	4	2' DIA X 2' DEEP	3"	11 94 01	TANK HAS DESIGNED 0'-6" FREEBOARD
T-428	MODULE 4 / INCUBATION ROOM	EARLY REARING TANK #28	4	2' DIA X 2' DEEP	3"	11 94 01	TANK HAS DESIGNED 0'-6" FREEBOARD
T-429	MODULE 4 / INCUBATION ROOM	EARLY REARING TANK #29	4	2' DIA X 2' DEEP	3"	11 94 01	TANK HAS DESIGNED 0'-6" FREEBOARD
T-430	MODULE 4 / INCUBATION ROOM	EARLY REARING TANK #30	4	2' DIA X 2' DEEP	3"	11 94 01	TANK HAS DESIGNED 0'-6" FREEBOARD
T-431	MODULE 4 / INCUBATION ROOM	EARLY REARING TANK #31	4	2' DIA X 2' DEEP	3"	11 94 01	TANK HAS DESIGNED 0'-6" FREEBOARD
T-432	MODULE 4 / INCUBATION ROOM	EARLY REARING TANK #32	4	2' DIA X 2' DEEP	3"	11 94 01	TANK HAS DESIGNED 0'-6" FREEBOARD
T-433	MODULE 4 / INCUBATION ROOM	EARLY REARING TANK #33	4	2' DIA X 2' DEEP	3"	11 94 01	TANK HAS DESIGNED 0'-6" FREEBOARD
T-434	MODULE 4 / INCUBATION ROOM	EARLY REARING TANK #34	4	2' DIA X 2' DEEP	3"	11 94 01	TANK HAS DESIGNED 0'-6" FREEBOARD
T-435	MODULE 4 / INCUBATION ROOM	EARLY REARING TANK #35	4	2' DIA X 2' DEEP	3"	11 94 01	TANK HAS DESIGNED 0'-6" FREEBOARD
T-436	MODULE 4 / INCUBATION ROOM	EARLY REARING TANK #36	4	2' DIA X 2' DEEP	3"	11 94 01	TANK HAS DESIGNED 0'-6" FREEBOARD
T-437	INCUBATION	CHILLED WATER TANK	4	150 GALLON	4"	40 95 01	
T-438	INCUBATION						

REVIEWED FOR CODE COMPLIANCE
Thomas W Peterson
12/14/2023
DIVISION OF FACILITIES CONSTRUCTION AND MANAGEMENT
DFCM CODE COMPLIANCE OFFICER

	PUBLISHED		
C	100% DESIGN REVIEW	JT	10/23
B	90% DESIGN REVIEW	JT	9/23
A	50% DESIGN REVIEW	JT	5/23
NO.	REVISIONS	BY	DATE

This document or any part thereof in detail or design concept is the property of Forsgren Associates Inc. and shall not be copied without the written authorization of Forsgren Associates Inc.

DRAWN DJ
DESIGNED MEC
APPROVED
QA MLL

ATTENTION
LINE IS 2-INCHES
AT 24"x36" SIZE
IF NOT 2-INCHES, SCALE DRAWING ACCORDINGLY

PROFESSIONAL ENGINEER — No. 13614104-2202 — BRENT WELTON — STATE OF UTAH — 10/04/2023

FISHERIES EXPERIMENT STATION
UTAH DIVISION OF WILDLIFE RESOURCES
1465 WEST 200 NORTH
LOGAN, UTAH 84321

UTAH DNR WILDLIFE RESOURCES

McMillen

Blue Stakes of UTAH 811 — Bluestakes.org

WARN WATER AQUACULTURE BUILDING
LOGAN HATCHERY IMPROVEMENT PROJECT

MECHANICAL SCHEDULE 2

PROJECT NO: 14-23-0005
SHEET NO: GM003
DATE: 10-2023
PAGE NO: 67

VALVE SCHEDULE

EQUIPMENT NUMBER	LOCATION	FLUID / SERVICE	TYPE	DIAMETER (in)	PRESSURE CLASS (psi)	ENDS	ACTUATOR TYPE (NORMAL POSITION)	BODY AND DISC MATL / COMMENTS
V-101	MODULE 1/TANK	RAS SUPPLY	TRUE UNION BALL VALVE	4	125	SOCKET	MANUAL OPEN	PVC
V-102	MODULE 1/TANK	RAS SUPPLY	TRUE UNION BALL VALVE	4	125	SOCKET	MANUAL OPEN	PVC
V-103	MODULE 1/TANK	RAS SUPPLY	TRUE UNION BALL VALVE	4	125	SOCKET	MANUAL OPEN	PVC
V-104	MODULE 1/TANK	RAS SUPPLY	TRUE UNION BALL VALVE	4	125	SOCKET	MANUAL OPEN	PVC
V-105	MODULE 1/TANK	RAS SUPPLY	TRUE UNION BALL VALVE	4	125	SOCKET	MANUAL OPEN	PVC
V-106	MODULE 1/TANK	RAS SUPPLY	TRUE UNION BALL VALVE	4	125	SOCKET	MANUAL OPEN	PVC
V-107	MODULE 1/TANK	RAS SUPPLY	TRUE UNION BALL VALVE	4	125	SOCKET	MANUAL OPEN	PVC
V-108	MODULE 1/TANK	RAS SUPPLY	TRUE UNION BALL VALVE	4	125	SOCKET	MANUAL OPEN	PVC
V-109	MODULE 1/TANK	TRENCH DRAIN	TRUE UNION BALL VALVE	4	125	SOCKET	CLOSED	PVC
V-110	MODULE 1/TANK	TRENCH DRAIN	TRUE UNION BALL VALVE	4	125	SOCKET	CLOSED	PVC
V-111	MODULE 1/TANK	TRENCH DRAIN	TRUE UNION BALL VALVE	4	125	SOCKET	CLOSED	PVC
V-112	MODULE 1/TANK	TRENCH DRAIN	TRUE UNION BALL VALVE	4	125	SOCKET	CLOSED	PVC
V-113	MODULE 1/TANK	TRENCH DRAIN	TRUE UNION BALL VALVE	4	125	SOCKET	CLOSED	PVC
V-114	MODULE 1/TANK	TRENCH DRAIN	TRUE UNION BALL VALVE	4	125	SOCKET	CLOSED	PVC
V-115	MODULE 1/TANK	TRENCH DRAIN	TRUE UNION BALL VALVE	4	125	SOCKET	CLOSED	PVC
V-116	MODULE 1/TANK	TRENCH DRAIN	TRUE UNION BALL VALVE	4	125	SOCKET	CLOSED	PVC
V-117	MODULE 1/TANK	DRAIN	TRUE UNION BALL VALVE	4	125	SOCKET	CLOSED	PVC
V-118	MODULE 1/TANK	DRAIN	TRUE UNION BALL VALVE	4	125	SOCKET	CLOSED	PVC
V-119	MODULE 1/TANK	DRAIN	TRUE UNION BALL VALVE	4	125	SOCKET	CLOSED	PVC
V-120	MODULE 1/TANK	DRAIN	TRUE UNION BALL VALVE	4	125	SOCKET	CLOSED	PVC
V-121	MODULE 1/TANK	DRAIN	TRUE UNION BALL VALVE	4	125	SOCKET	CLOSED	PVC
V-122	MODULE 1/TANK	DRAIN	TRUE UNION BALL VALVE	4	125	SOCKET	CLOSED	PVC
V-123	MODULE 1/TANK	DRAIN	TRUE UNION BALL VALVE	4	125	SOCKET	CLOSED	PVC
V-124	MODULE 1/TANK	DRAIN	TRUE UNION BALL VALVE	4	125	SOCKET	CLOSED	PVC
V-125	MODULE 1/TANK	OXYGEN	BALL	1	125	THREADED	CLOSED	SS
V-126	MODULE 1/TANK	OXYGEN	BALL	1	125	THREADED	CLOSED	SS
V-127	MODULE 1/TANK	OXYGEN	BALL	1	125	THREADED	CLOSED	SS
V-128	MODULE 1/TANK	OXYGEN	BALL	1	125	THREADED	CLOSED	SS
V-129	MODULE 1/TANK	OXYGEN	BALL	1	125	THREADED	CLOSED	SS
V-130	MODULE 1/TANK	OXYGEN	BALL	1	125	THREADED	CLOSED	SS
V-131	MODULE 1/TANK	OXYGEN	BALL	1	125	THREADED	CLOSED	SS
V-132	MODULE 1/TANK	OXYGEN	BALL	1	125	THREADED	CLOSED	SS
V-133	MODULE 1 / LHO	RAS SUPPLY	BUTTERFLY	8	125	THREADED	MANUAL OPEN	
V-134	MODULE 1 / LHO	RAS SUPPLY	BUTTERFLY	8	125	WAFER	MANUAL OPEN	
V-135	MODULE 1 / LHO	OXYGEN	GATE	1	125	MJ/MJ	MANUAL OPEN	SS
V-136	MODULE 1 / UV	RAS SUPPLY	BUTTERFLY	8	125	WAFER	MANUAL OPEN	
V-137	MODULE 1 / UV	RAS SUPPLY	BUTTERFLY	8	125	WAFER	MANUAL OPEN	
V-138	MODULE 1 / UV	RAS SUPPLY	BUTTERFLY	8	125	WAFER	CLOSED	
V-140	MODULE 1/ DRUM FILTER	RAS RETURN	BUTTERFLY	10	125	WAFER	MANUAL OPEN	
V-141	MODULE 1/ PUMP	RAS SUPPLY	TRUE UNION BALL VALVE	4	125	SOCKET	MANUAL OPEN	PVC
V-142	MODULE 1/ PUMP	RAS SUPPLY	TRUE UNION BALL VALVE	3	125	SOCKET	MANUAL OPEN	PVC
V-143	MODULE 1/ PUMP	RAS SUPPLY	TRUE UNION BALL VALVE	4	125	SOCKET	MANUAL OPEN	PVC
V-144	MODULE 1/ PUMP	RAS SUPPLY	TRUE UNION BALL VALVE	3	125	SOCKET	MANUAL OPEN	PVC
V-145	MODULE 1/ PUMP	RAS SUPPLY	TRUE UNION BALL VALVE	4	125	SOCKET	MANUAL OPEN	PVC
V-146	MODULE 1/ PUMP	RAS SUPPLY	TRUE UNION BALL VALVE	3	125	SOCKET	MANUAL OPEN	PVC
V-147	MODULE 1/CLEAN OUT	RAS SUPPLY	GATE	6	125	WAFER	MANUAL OPEN	PVC
V-148	MODULE 1/2	WW	BUTTERFLY	6	125	WAFER	MANUAL OPEN	
V-151	MODULE 1/TANK	OXYGEN	SOLENOID, NO	1	125	UNION	OPEN	SS
V-152	MODULE 1/TANK	OXYGEN	SOLENOID, NO	1	125	UNION	OPEN	SS
V-153	MODULE 1/TANK	OXYGEN	SOLENOID, NO	1	125	UNION	OPEN	SS
V-154	MODULE 1/TANK	OXYGEN	SOLENOID, NO	1	125	UNION	OPEN	SS
V-155	MODULE 1/TANK	OXYGEN	BALL	1	125	THREADED	CLOSED	SS
V-156	MODULE 1/TANK	OXYGEN	BALL	1	125	THREADED	CLOSED	SS
V-159	MODULE 1/TANK	OXYGEN	METER	3/8	125	NPT - (SS)	OPEN	ACRYLIC / SS FITTINGS
V-160	MODULE 1/TANK	OXYGEN	METER	3/8	125	NPT - (SS)	OPEN	ACRYLIC / SS FITTINGS
V-161	MODULE 1/TANK	OXYGEN	METER	3/8	125	NPT - (SS)	OPEN	ACRYLIC / SS FITTINGS
V-162	MODULE 1/TANK	OXYGEN	METER	3/8	125	NPT - (SS)	OPEN	ACRYLIC / SS FITTINGS
V-163	MODULE 1/TANK	OXYGEN	METER	3/8	125	NPT - (SS)	OPEN	ACRYLIC / SS FITTINGS
V-164	MODULE 1/TANK	OXYGEN	METER	3/8	125	NPT - (SS)	OPEN	ACRYLIC / SS FITTINGS
V-165	MODULE 1/TANK	OXYGEN	METER	3/8	125	NPT - (SS)	OPEN	ACRYLIC / SS FITTINGS
V-166	MODULE 1/TANK	OXYGEN	METER	3/8	125	NPT - (SS)	OPEN	ACRYLIC / SS FITTINGS
V-167	MODULE 1/ WARM WELL WATER	MAKEUP WATER	BFV	3	125	FLG/FLG	MODULATING	ELECTRIC MOTOR ACTUATOR
V-176	MODULE 1/ RAS PUMP	RAS SUPPLY	TRUE UNION CHECK VALVE	3	125	SOCKET		
V-177	MODULE 1/ RAS PUMP	RAS SUPPLY	TRUE UNION CHECK VALVE	3	125	SOCKET		
V-178	MODULE 1/ RAS PUMP	RAS SUPPLY	TRUE UNION CHECK VALVE	3	125	SOCKET		
V-181	MODULE 1/ WARM WELL WATER	MAKEUP WATER	BUTTERFLY	4	125	SOCKET	MANUAL OPEN	

VALVE SCHEDULE

EQUIPMENT NUMBER	LOCATION	FLUID / SERVICE	TYPE	DIAMETER (in)	PRESSURE CLASS (psi)	ENDS	ACTUATOR TYPE (NORMAL POSITION)	BODY AND DISC MATL/COMMENTS
V-201	MODULE 2/TANK	RAS SUPPLY	TRUE UNION BALL VALVE	4	125	SOCKET	MANUAL OPEN	PVC
V-202	MODULE 2/TANK	RAS SUPPLY	TRUE UNION BALL VALVE	4	125	SOCKET	MANUAL OPEN	PVC
V-203	MODULE 2/TANK	RAS SUPPLY	TRUE UNION BALL VALVE	4	125	SOCKET	MANUAL OPEN	PVC
V-204	MODULE 2/TANK	RAS SUPPLY	TRUE UNION BALL VALVE	4	125	SOCKET	MANUAL OPEN	PVC
V-205	MODULE 2/TANK	RAS SUPPLY	TRUE UNION BALL VALVE	4	125	SOCKET	MANUAL OPEN	PVC
V-206	MODULE 2/TANK	RAS SUPPLY	TRUE UNION BALL VALVE	4	125	SOCKET	MANUAL OPEN	PVC
V-207	MODULE 2/TANK	RAS SUPPLY	TRUE UNION BALL VALVE	4	125	SOCKET	MANUAL OPEN	PVC
V-208	MODULE 2/TANK	RAS SUPPLY	TRUE UNION BALL VALVE	4	125	SOCKET	MANUAL OPEN	PVC
V-209	MODULE 2/TANK	TRENCH DRAIN	TRUE UNION BALL VALVE	4	125	SOCKET	CLOSED	PVC
V-210	MODULE 2/TANK	TRENCH DRAIN	TRUE UNION BALL VALVE	4	125	SOCKET	CLOSED	PVC
V-211	MODULE 2/TANK	TRENCH DRAIN	TRUE UNION BALL VALVE	4	125	SOCKET	CLOSED	PVC
V-212	MODULE 2/TANK	TRENCH DRAIN	TRUE UNION BALL VALVE	4	125	SOCKET	CLOSED	PVC
V-213	MODULE 2/TANK	TRENCH DRAIN	TRUE UNION BALL VALVE	4	125	SOCKET	CLOSED	PVC
V-214	MODULE 2/TANK	TRENCH DRAIN	TRUE UNION BALL VALVE	4	125	SOCKET	CLOSED	PVC
V-215	MODULE 2/TANK	TRENCH DRAIN	TRUE UNION BALL VALVE	4	125	SOCKET	CLOSED	PVC
V-216	MODULE 2/TANK	TRENCH DRAIN	TRUE UNION BALL VALVE	4	125	SOCKET	CLOSED	PVC
V-217	MODULE 2/TANK	DRAIN	TRUE UNION BALL VALVE	4	125	SOCKET	CLOSED	PVC
V-218	MODULE 2/TANK	DRAIN	TRUE UNION BALL VALVE	4	125	SOCKET	CLOSED	PVC
V-219	MODULE 2/TANK	DRAIN	TRUE UNION BALL VALVE	4	125	SOCKET	CLOSED	PVC
V-220	MODULE 2/TANK	DRAIN	TRUE UNION BALL VALVE	4	125	SOCKET	CLOSED	PVC
V-221	MODULE 2/TANK	DRAIN	TRUE UNION BALL VALVE	4	125	SOCKET	CLOSED	PVC
V-222	MODULE 2/TANK	DRAIN	TRUE UNION BALL VALVE	4	125	SOCKET	CLOSED	PVC
V-223	MODULE 2/TANK	DRAIN	TRUE UNION BALL VALVE	4	125	SOCKET	CLOSED	PVC
V-224	MODULE 2/TANK	DRAIN	TRUE UNION BALL VALVE	4	125	SOCKET	CLOSED	PVC
V-225	MODULE 2/TANK	OXYGEN	BALL	1	125	THREADED	CLOSED	SS
V-226	MODULE 2/TANK	OXYGEN	BALL	1	125	THREADED	CLOSED	SS
V-227	MODULE 2/TANK	OXYGEN	BALL	1	125	THREADED	CLOSED	SS
V-228	MODULE 2/TANK	OXYGEN	BALL	1	125	THREADED	CLOSED	SS
V-229	MODULE 2/TANK	OXYGEN	BALL	1	125	THREADED	CLOSED	SS
V-230	MODULE 2/TANK	OXYGEN	BALL	1	125	THREADED	CLOSED	SS
V-231	MODULE 2/TANK	OXYGEN	BALL	1	125	THREADED	CLOSED	SS
V-232	MODULE 2/TANK	OXYGEN	BALL	1	125	THREADED	CLOSED	SS
V-233	MODULE 2 / LHO	RAS SUPPLY	BUTTERFLY	8	125	WAFER	MANUAL OPEN	
V-234	MODULE 2 / LHO	RAS SUPPLY	BUTTERFLY	8	125	WAFER	CLOSED	
V-235	MODULE 2 / LHO	OXYGEN	GATE	1	125	MJ/MJ	MANUAL OPEN	PVC
V-236	MODULE 2 / UV	RAS SUPPLY	BUTTERFLY	8	125	WAFER	MANUAL OPEN	
V-237	MODULE 2 / UV	RAS SUPPLY	BUTTERFLY	8	125	WAFER	MANUAL OPEN	
V-238	MODULE 2 / UV	RAS SUPPLY	BUTTERFLY	8	125	WAFER	CLOSED	
V-240	MODULE 2/DRUM FILTER	RAS RETURN	BUTTERFLY	10	125	WAFER	MANUAL OPEN	
V-241	MODULE 2/ PUMP	RAS SUPPLY	TRUE UNION BALL VALVE	4	125	SOCKET	MANUAL OPEN	PVC
V-242	MODULE 2/ PUMP	RAS SUPPLY	TRUE UNION BALL VALVE	3	125	SOCKET	MANUAL OPEN	PVC
V-243	MODULE 2/ PUMP	RAS SUPPLY	TRUE UNION BALL VALVE	4	125	SOCKET	MANUAL OPEN	PVC
V-244	MODULE 2/ PUMP	RAS SUPPLY	TRUE UNION BALL VALVE	3	125	SOCKET	MANUAL OPEN	PVC
V-245	MODULE 2/ PUMP	RAS SUPPLY	TRUE UNION BALL VALVE	4	125	SOCKET	MANUAL OPEN	PVC
V-246	MODULE 2/ PUMP	RAS SUPPLY	TRUE UNION BALL VALVE	3	125	SOCKET	MANUAL OPEN	PVC
V-247	MODULE 1/CLEAN OUT	RAS SUPPLY	GATE	6	125	WAFER	CLOSED	
V-251	MODULE 2/TANK	OXYGEN	SOLENOID, NO	1	125	UNION	OPEN	SS
V-252	MODULE 2/TANK	OXYGEN	SOLENOID, NO	1	125	UNION	OPEN	SS
V-253	MODULE 2/TANK	OXYGEN	SOLENOID, NO	1	125	UNION	OPEN	SS
V-254	MODULE 2/TANK	OXYGEN	BALL	1	125	THREADED	OPEN	SS
V-255	MODULE 2/TANK	OXYGEN	BALL	1	125	THREADED	OPEN	SS
V-256	MODULE 2/TANK	OXYGEN	NEEDLE	3/8	125	NPT-(SS)	OPEN	
V-259	MODULE 2/TANK	OXYGEN	METER	3/8	125	NPT-(SS)	OPEN	ACRYLIC / SS FITTINGS
V-260	MODULE 2/TANK	OXYGEN	METER	3/8	125	NPT-(SS)	OPEN	ACRYLIC / SS FITTINGS
V-261	MODULE 2/TANK	OXYGEN	METER	3/8	125	NPT-(SS)	OPEN	ACRYLIC / SS FITTINGS
V-262	MODULE 2/TANK	OXYGEN	METER	3/8	125	NPT-(SS)	OPEN	ACRYLIC / SS FITTINGS
V-263	MODULE 2/TANK	OXYGEN	METER	3/8	125	NPT-(SS)	OPEN	ACRYLIC / SS FITTINGS
V-264	MODULE 2/TANK	OXYGEN	METER	3/8	125	NPT-(SS)	OPEN	ACRYLIC / SS FITTINGS
V-265	MODULE 2/TANK	OXYGEN	METER	3/8	125	NPT-(SS)	OPEN	ACRYLIC / SS FITTINGS
V-266	MODULE 2/TANK	OXYGEN	METER	3/8	125	NPT-(SS)	OPEN	ACRYLIC / SS FITTINGS
V-267	MODULE 2/ WARM WELL WATER	MAKEUP WATER	BFV	3	125	FLG/FLG	MODULATING	ELECTRIC MOTOR ACTUATOR
V-276	MODULE 2/ RAS PUMP	RAS SUPPLY	TRUE UNION CHECK VALVE	3	125	SOCKET		PVC
V-277	MODULE 2/ RAS PUMP	RAS SUPPLY	TRUE UNION CHECK VALVE	3	125	SOCKET		PVC
V-278	MODULE 2/ RAS PUMP	RAS SUPPLY	TRUE UNION CHECK VALVE	3	125	SOCKET		PVC
V-281	MODULE 2/ WARM WELL WATER	MAKEUP WATER	BUTTERFLY	4	125	SOCKET	MANUAL OPEN	

REVIEWED FOR CODE COMPLIANCE
Thomas W Peterson
12/14/2023
DIVISION OF FACILITIES CONSTRUCTION AND MANAGEMENT

DFCM CODE COMPLIANCE OFFICER

NO.	REVISIONS	BY	DATE
C	100% DESIGN REVIEW	JT	10/23
B	90% DESIGN REVIEW	JT	9/23
A	50% DESIGN REVIEW	JT	5/23

PUBLISHED

This document or any part thereof in detail or design concept is the property of Forsgren Associates Inc. and shall not be copied without the written authorization of Forsgren Associates Inc.

DRAWN DJ
DESIGNED MEC
APPROVED
QA MLL

ATTENTION
LINE IS 2-INCHES
AT 24"x36" SIZE
IF NOT 2-INCHES, SCALE DRAWING ACCORDINGLY

PROFESSIONAL ENGINEER — No. 13614104-2202 — BRENT WELTON — STATE OF UTAH — 10/04/2023

FISHERIES EXPERIMENT STATION
UTAH DIVISION OF WILDLIFE RESOURCES
1465 WEST 200 NORTH
LOGAN, UTAH 84321

UTAH DNR WILDLIFE RESOURCES

McMillen

Blue Stakes of UTAH 811 — Bluestakes.org

WARN WATER AQUACULTURE BUILDING
LOGAN HATCHERY IMPROVEMENT PROJECT

MECHANICAL SCHEDULE 3

PROJECT NO: 14-23-0005
SHEET NO: GM004
DATE: 10-2023
PAGE NO: 68

VALVE SCHEDULE

EQUIPMENT NUMBER	LOCATION	FLUID / SERVICE	TYPE	DIAMETER (in)	PRESSURE CLASS (psi)	ENDS	ACTUATOR TYPE (NORMAL POSITION)	BODY AND DISC MATL/COMMENTS
V-301	MODULE 3/TANK	RAS SUPPLY	TRUE UNION BALL VALVE	4	125	SOCKET	MANUAL OPEN	PVC
V-302	MODULE 3/TANK	RAS SUPPLY	TRUE UNION BALL VALVE	4	125	SOCKET	MANUAL OPEN	PVC
V-303	MODULE 3/TANK	RAS SUPPLY	TRUE UNION BALL VALVE	4	125	SOCKET	MANUAL OPEN	PVC
V-304	MODULE 3/TANK	RAS SUPPLY	TRUE UNION BALL VALVE	4	125	SOCKET	MANUAL OPEN	PVC
V-305	MODULE 3/TANK	RAS SUPPLY	TRUE UNION BALL VALVE	4	125	SOCKET	MANUAL OPEN	PVC
V-306	MODULE 3/TANK	RAS SUPPLY	TRUE UNION BALL VALVE	4	125	SOCKET	MANUAL OPEN	PVC
V-307	MODULE 3/TANK	RAS SUPPLY	TRUE UNION BALL VALVE	4	125	SOCKET	MANUAL OPEN	PVC
V-308	MODULE 3/TANK	RAS SUPPLY	TRUE UNION BALL VALVE	4	125	SOCKET	MANUAL OPEN	PVC
V-309	MODULE 3/TANK	RAS SUPPLY	TRUE UNION BALL VALVE	4	125	SOCKET	MANUAL OPEN	PVC
V-310	MODULE 3/TANK	RAS SUPPLY	TRUE UNION BALL VALVE	4	125	SOCKET	MANUAL OPEN	PVC
V-311	MODULE 3/TANK	RAS SUPPLY	TRUE UNION BALL VALVE	4	125	SOCKET	MANUAL OPEN	PVC
V-312	MODULE 3/TANK	TRENCH DRAIN	TRUE UNION BALL VALVE	4	125	SOCKET	MANUAL OPEN	PVC
V-313	MODULE 3/TANK	TRENCH DRAIN	TRUE UNION BALL VALVE	4	125	SOCKET	MANUAL OPEN	PVC
V-314	MODULE 3/TANK	TRENCH DRAIN	TRUE UNION BALL VALVE	4	125	SOCKET	MANUAL OPEN	PVC
V-315	MODULE 3/TANK	TRENCH DRAIN	TRUE UNION BALL VALVE	4	125	SOCKET	MANUAL OPEN	PVC
V-316	MODULE 3/TANK	TRENCH DRAIN	TRUE UNION BALL VALVE	4	125	SOCKET	MANUAL OPEN	PVC
V-317	MODULE 3/TANK	TRENCH DRAIN	TRUE UNION BALL VALVE	4	125	SOCKET	MANUAL OPEN	PVC
V-318	MODULE 3/TANK	TRENCH DRAIN	TRUE UNION BALL VALVE	4	125	SOCKET	MANUAL OPEN	PVC
V-319	MODULE 3/TANK	TRENCH DRAIN	TRUE UNION BALL VALVE	4	125	SOCKET	MANUAL OPEN	PVC
V-320	MODULE 3/TANK	TRENCH DRAIN	TRUE UNION BALL VALVE	4	125	SOCKET	MANUAL OPEN	PVC
V-321	MODULE 3/TANK	TRENCH DRAIN	TRUE UNION BALL VALVE	4	125	SOCKET	MANUAL OPEN	PVC
V-322	MODULE 3/TANK	TRENCH DRAIN	TRUE UNION BALL VALVE		125	SOCKET	MANUAL OPEN	PVC
V-323	MODULE 3/TANK	DRAIN	TRUE UNION BALL VALVE	4	125	SOCKET	MANUAL OPEN	PVC
V-324	MODULE 3/TANK	DRAIN	TRUE UNION BALL VALVE	4	125	SOCKET	MANUAL OPEN	PVC
V-325	MODULE 3/TANK	DRAIN	TRUE UNION BALL VALVE	4	125	SOCKET	MANUAL OPEN	PVC
V-326	MODULE 3/TANK	DRAIN	TRUE UNION BALL VALVE	4	125	SOCKET	MANUAL OPEN	PVC
V-327	MODULE 3/TANK	DRAIN	TRUE UNION BALL VALVE	4	125	SOCKET	MANUAL OPEN	PVC
V-328	MODULE 3/TANK	DRAIN	TRUE UNION BALL VALVE	4	125	SOCKET	MANUAL OPEN	PVC
V-329	MODULE 3/TANK	DRAIN	TRUE UNION BALL VALVE	4	125	SOCKET	MANUAL OPEN	PVC
V-330	MODULE 3/TANK	DRAIN	TRUE UNION BALL VALVE	4	125	SOCKET	MANUAL OPEN	PVC
V-331	MODULE 3/TANK	DRAIN	TRUE UNION BALL VALVE	4	125	SOCKET	MANUAL OPEN	PVC
V-332	MODULE 3/TANK	DRAIN	TRUE UNION BALL VALVE	4	125	SOCKET	MANUAL OPEN	PVC
V-333	MODULE 3/TANK	DRAIN	TRUE UNION BALL VALVE	3/8	125	SOCKET	MANUAL OPEN	PVC
V-334	MODULE 3/TANK	OXYGEN	BALL	1	125	THREADED	CLOSED	SS
V-335	MODULE 3/TANK	OXYGEN	BALL	1	125	THREADED	CLOSED	SS
V-336	MODULE 3/TANK	OXYGEN	BALL	1	125	THREADED	CLOSED	SS
V-337	MODULE 3/TANK	OXYGEN	BALL	1	125	THREADED	CLOSED	SS
V-338	MODULE 3/TANK	OXYGEN	BALL	1	125	THREADED	CLOSED	SS
V-339	MODULE 3/TANK	OXYGEN	BALL	1	125	THREADED	CLOSED	SS
V-340	MODULE 3/TANK	OXYGEN	BALL	1	125	THREADED	CLOSED	SS
V-341	MODULE 3/TANK	OXYGEN	BALL	1	125	THREADED	CLOSED	SS
V-345	MODULE 3/LHO	RAS SUPPLY	BUTTERFLY	10	125	WAFER	MANUAL OPEN	
V-346	MODULE 3/LHO	RAS SUPPLY	BUTTERFLY	10	125	WAFER	CLOSED	
V-347	MODULE 3/LHO	OXYGEN	BALL	1	125	THREADED	MANUAL OPEN	SS
V-348	MODULE 3/ UV	RAS SUPPLY	BUTTERFLY	10	125	WAFER	CLOSED	
V-349	MODULE 3/ UV	RAS SUPPLY	BUTTERFLY	10	125	WAFER	MANUAL OPEN	
V-350	MODULE 3/ UV	RAS SUPPLY	BUTTERFLY	10	125	WAFER	MANUAL OPEN	
V-352	MODULE 3/ PUMP	RAS SUPPLY	BUTTERFLY	5	125	WAFER	MANUAL OPEN	
V-353	MODULE 3/ PUMP	RAS SUPPLY	TRUE UNION BALL VALVE	4	125	SOCKET	MANUAL OPEN	PVC
V-354	MODULE 3/ PUMP	RAS SUPPLY	BUTTERFLY	5	125	WAFER	MANUAL OPEN	
V-355	MODULE 3/ PUMP	RAS SUPPLY	TRUE UNION BALL VALVE	4	125	SOCKET	MANUAL OPEN	PVC
V-356	MODULE 3/ PUMP	RAS SUPPLY	BUTTERFLY	5	125	WAFER	MANUAL OPEN	
V-357	MODULE 3/ PUMP	RAS SUPPLY	TRUE UNION BALL VALVE	4	125	SOCKET	MANUAL OPEN	PVC
V-358	MODULE 3/DRUM FILTER	RAS SUPPLY	BUTTERFLY	12	125	WAFER	MANUAL OPEN	
V-367	MODULE 3/TANK	OXYGEN	SOLENOID	1	125	UNION	OPEN	SS
V-368	MODULE 3/TANK	OXYGEN	SOLENOID	1	125	UNION	OPEN	SS
V-369	MODULE 3/TANK	OXYGEN	SOLENOID	1	125	UNION	OPEN	SS
V-370	MODULE 3/TANK	OXYGEN	SOLENOID	1	125	UNION	OPEN	SS

VALVE SCHEDULE

EQUIPMENT NUMBER	LOCATION	FLUID / SERVICE	TYPE	DIAMETER (in)	PRESSURE CLASS (psi)	ENDS	ACTUATOR TYPE (NORMAL POSITION)	BODY AND DISC MATL/COMMENTS
V-378	MODULE 3/TANK	OXYGEN	METER	3/8	125	NPT - (SS)	OPEN	ACRYLIC / SS FITTINGS
V-379	MODULE 3/TANK	OXYGEN	METER	3/8	125	NPT - (SS)	OPEN	ACRYLIC / SS FITTINGS
V-380	MODULE 3/TANK	OXYGEN	METER	3/8	125	NPT - (SS)	OPEN	ACRYLIC / SS FITTINGS
V-381	MODULE 3/TANK	OXYGEN	METER	3/8	125	NPT - (SS)	OPEN	ACRYLIC / SS FITTINGS
V-382	MODULE 3/TANK	OXYGEN	METER	3/8	125	NPT - (SS)	OPEN	ACRYLIC / SS FITTINGS
V-383	MODULE 3/TANK	OXYGEN	METER	3/8	125	NPT - (SS)	OPEN	ACRYLIC / SS FITTINGS
V-384	MODULE 3/TANK	OXYGEN	METER	3/8	125	NPT - (SS)	OPEN	ACRYLIC / SS FITTINGS
V-385	MODULE 3/TANK	OXYGEN	METER	3/8	125	NPT - (SS)	OPEN	ACRYLIC / SS FITTINGS
V-386	MODULE 3/TANK	OXYGEN	METER	3/8	125	NPT - (SS)	OPEN	ACRYLIC / SS FITTINGS
V-387	MODULE 3/TANK	OXYGEN	METER	3/8	125	NPT - (SS)	OPEN	ACRYLIC / SS FITTINGS
V-388	MODULE 3/TANK	OXYGEN	METER	3/8	125	NPT - (SS)	OPEN	ACRYLIC / SS FITTINGS
V-389	MODULE 3/WARM WELL WATER	MAKEUP WATER	BFV	4	125	FLG/FLG	MODULATING	ELECTRIC MOTOR ACTUATOR
V-394	MODULE 3/PUMP	RAS SUPPLY	TRUE UNION CHECK VALVE	4	125	SOCKET		PVC
V-395	MODULE 3/PUMP	RAS SUPPLY	TRUE UNION CHECK VALVE	4	125	SOCKET		PVC
V-396	MODULE 3/PUMP	RAS SUPPLY	TRUE UNION CHECK VALVE	4	125	SOCKET		PVC
V-397	MODULE 3/WARM WELL WATER	MAKEUP WATER	BUTTERFLY	6	125	WAFER	MANUAL OPEN	
V-398	MODULE 3/WARM WELL WATER	MAKEUP WATER	BUTTERFLY	8	125	WAFER	MANUAL OPEN	
V-401	INCUBATION JAR	CHILLED WATER	TRUE UNION BALL VALVE	3/4	125	SOCKET	MANUAL OPEN	PVC
V-402	INCUBATION JAR	CHILLED WATER	TRUE UNION BALL VALVE	3/4	125	SOCKET	MANUAL OPEN	PVC
V-403	INCUBATION JAR	CHILLED WATER	TRUE UNION BALL VALVE	3/4	125	SOCKET	MANUAL OPEN	PVC
V-404	INCUBATION JAR	CHILLED WATER	TRUE UNION BALL VALVE	3/4	125	SOCKET	MANUAL OPEN	PVC
V-405	INCUBATION JAR	CHILLED WATER	TRUE UNION BALL VALVE	3/4	125	SOCKET	MANUAL OPEN	PVC
V-406	INCUBATION JAR	CHILLED WATER	TRUE UNION BALL VALVE	3/4	125	SOCKET	MANUAL OPEN	PVC
V-407	INCUBATION JAR	CHILLED WATER	TRUE UNION BALL VALVE	3/4	125	SOCKET	MANUAL OPEN	PVC
V-408	INCUBATION JAR	CHILLED WATER	TRUE UNION BALL VALVE	3/4	125	SOCKET	MANUAL OPEN	PVC
V-409	INCUBATION JAR	CHILLED WATER	TRUE UNION BALL VALVE	3/4	125	SOCKET	MANUAL OPEN	PVC
V-410	INCUBATION JAR	CHILLED WATER	TRUE UNION BALL VALVE	3/4	125	SOCKET	MANUAL OPEN	PVC
V-411	INCUBATION JAR	CHILLED WATER	TRUE UNION BALL VALVE	3/4	125	SOCKET	MANUAL OPEN	PVC
V-412	INCUBATION JAR	CHILLED WATER	TRUE UNION BALL VALVE	3/4	125	SOCKET	MANUAL OPEN	PVC
V-413	INCUBATION JAR	CHILLED WATER	TRUE UNION BALL VALVE	3/4	125	SOCKET	MANUAL OPEN	PVC
V-414	INCUBATION JAR	CHILLED WATER	TRUE UNION BALL VALVE	3/4	125	SOCKET	MANUAL OPEN	PVC
V-415	INCUBATION JAR	CHILLED WATER	TRUE UNION BALL VALVE	3/4	125	SOCKET	MANUAL OPEN	PVC
V-416	INCUBATION JAR	CHILLED WATER	TRUE UNION BALL VALVE	3/4	125	SOCKET	MANUAL OPEN	PVC
V-417	INCUBATION JAR	CHILLED WATER	TRUE UNION BALL VALVE	3/4	125	SOCKET	MANUAL OPEN	PVC
V-418	INCUBATION JAR	CHILLED WATER	TRUE UNION BALL VALVE	3/4	125	SOCKET	MANUAL OPEN	PVC
V-419	INCUBATION JAR	CHILLED WATER	TRUE UNION BALL VALVE	3/4	125	SOCKET	MANUAL OPEN	PVC
V-420	INCUBATION JAR	CHILLED WATER	TRUE UNION BALL VALVE	3/4	125	SOCKET	MANUAL OPEN	PVC
V-421	INCUBATION JAR	CHILLED WATER	TRUE UNION BALL VALVE	3/4	125	SOCKET	MANUAL OPEN	PVC
V-422	INCUBATION JAR	CHILLED WATER	TRUE UNION BALL VALVE	3/4	125	SOCKET	MANUAL OPEN	PVC
V-423	INCUBATION JAR	CHILLED WATER	TRUE UNION BALL VALVE	3/4	125	SOCKET	MANUAL OPEN	PVC
V-424	INCUBATION JAR	CHILLED WATER	TRUE UNION BALL VALVE	3/4	125	SOCKET	MANUAL OPEN	PVC
V-425	INCUBATION JAR	CHILLED WATER	TRUE UNION BALL VALVE	3/4	125	SOCKET	MANUAL OPEN	PVC
V-426	INCUBATION JAR	CHILLED WATER	TRUE UNION BALL VALVE	3/4	125	SOCKET	MANUAL OPEN	PVC
V-427	INCUBATION JAR	CHILLED WATER	TRUE UNION BALL VALVE	3/4	125	SOCKET	MANUAL OPEN	PVC
V-428	INCUBATION JAR	CHILLED WATER	TRUE UNION BALL VALVE	3/4	125	SOCKET	MANUAL OPEN	PVC
V-429	INCUBATION JAR	CHILLED WATER	TRUE UNION BALL VALVE	3/4	125	SOCKET	MANUAL OPEN	PVC
V-430	INCUBATION JAR	CHILLED WATER	TRUE UNION BALL VALVE	3/4	125	SOCKET	MANUAL OPEN	PVC
V-431	INCUBATION JAR	CHILLED WATER	TRUE UNION BALL VALVE	3/4	125	SOCKET	MANUAL OPEN	PVC
V-432	INCUBATION JAR	CHILLED WATER	TRUE UNION BALL VALVE	3/4	125	SOCKET	MANUAL OPEN	PVC
V-433	INCUBATION JAR	CHILLED WATER	TRUE UNION BALL VALVE	3/4	125	SOCKET	MANUAL OPEN	PVC
V-434	INCUBATION JAR	CHILLED WATER	TRUE UNION BALL VALVE	3/4	125	SOCKET	MANUAL OPEN	PVC
V-435	INCUBATION JAR	CHILLED WATER	TRUE UNION BALL VALVE	3/4	125	SOCKET	MANUAL OPEN	PVC
V-436	INCUBATION JAR	CHILLED WATER	TRUE UNION BALL VALVE	3/4	125	SOCKET	MANUAL OPEN	PVC
V-437	INCUBATION JAR	WARM WATER	TRUE UNION BALL VALVE	3/4	125	SOCKET	MANUAL OPEN	PVC
V-438	INCUBATION JAR	WARM WATER	TRUE UNION BALL VALVE	3/4	125	SOCKET	MANUAL OPEN	PVC
V-439	INCUBATION JAR	WARM WATER	TRUE UNION BALL VALVE	3/4	125	SOCKET	MANUAL OPEN	PVC
V-440	INCUBATION JAR	WARM WATER	TRUE UNION BALL VALVE	3/4	125	SOCKET	MANUAL OPEN	PVC
V-441	INCUBATION JAR	WARM WATER	TRUE UNION BALL VALVE	3/4	125	SOCKET	MANUAL OPEN	PVC
V-442	INCUBATION JAR	WARM WATER	TRUE UNION BALL VALVE	3/4	125	SOCKET	MANUAL OPEN	PVC
V-443	INCUBATION JAR	WARM WATER	TRUE UNION BALL VALVE	3/4	125	SOCKET	MANUAL OPEN	PVC
V-444	INCUBATION JAR	WARM WATER	TRUE UNION BALL VALVE	3/4	125	SOCKET	MANUAL OPEN	PVC
V-445	INCUBATION JAR	WARM WATER	TRUE UNION BALL VALVE	3/4	125	SOCKET	MANUAL OPEN	PVC
V-446	INCUBATION JAR	WARM WATER	TRUE UNION BALL VALVE	3/4	125	SOCKET	MANUAL OPEN	PVC
V-447	INCUBATION JAR	WARM WATER	TRUE UNION BALL VALVE	3/4	125	SOCKET	MANUAL OPEN	PVC
V-448	INCUBATION JAR	WARM WATER	TRUE UNION BALL VALVE	3/4	125	SOCKET	MANUAL OPEN	PVC
V-449	INCUBATION JAR	WARM WATER	TRUE UNION BALL VALVE	3/4	125	SOCKET	MANUAL OPEN	PVC
V-450	INCUBATION JAR	WARM WATER	TRUE UNION BALL VALVE	3/4	125	SOCKET	MANUAL OPEN	PVC
V-451	INCUBATION JAR	WARM WATER	TRUE UNION BALL VALVE	3/4	125	SOCKET	MANUAL OPEN	PVC

REVIEWED FOR CODE COMPLIANCE
Thomas W Peterson
12/14/2023
DIVISION OF FACILITIES CONSTRUCTION AND MANAGEMENT
DFCM CODE COMPLIANCE OFFICER

	PUBLISHED		
C	100% DESIGN REVIEW	JT	10/23
B	90% DESIGN REVIEW	JT	9/23
A	50% DESIGN REVIEW	JT	5/23
NO.	REVISIONS	BY	DATE

This document or any part thereof in detail or design concept is the property of Forsgren Associates Inc. and shall not be copied without the written authorization of Forsgren Associates Inc.

DRAWN DJ
DESIGNED MEC
APPROVED
QA MLL

ATTENTION
LINE IS 2-INCHES
AT 24"x36" SIZE
IF NOT 2-INCHES, SCALE DRAWING ACCORDINGLY

PROFESSIONAL ENGINEER — No. 13614104-2202 — BRENT WELTON — STATE OF UTAH
10/04/2023

FISHERIES EXPERIMENT STATION
UTAH DIVISION OF WILDLIFE RESOURCES
1465 WEST 200 NORTH
LOGAN, UTAH 84321

UTAH DNR WILDLIFE RESOURCES

McMillen

Blue Stakes of UTAH 811 Bluestakes.org

WARN WATER AQUACULTURE BUILDING
LOGAN HATCHERY IMPROVEMENT PROJECT

MECHANICAL SCHEDULE 4

PROJECT NO: 14-23-0005
SHEET NO: GM005
DATE: 10-2023
PAGE NO: 69

VALVE SCHEDULE

EQUIPMENT NUMBER	LOCATION	FLUID / SERVICE	TYPE	DIAMETER (in)		ENDS	ACTUATOR TYPE (NORMAL POSITION)	BODY AND DISC MATL/COMMENTS
V-452	INCUBATION JAR	WARM WATER	TRUE UNION BALL VALVE	3/4	125	SOCKET	MANUAL OPEN	PVC
V-453	INCUBATION JAR	WARM WATER	TRUE UNION BALL VALVE	3/4	125	SOCKET	MANUAL OPEN	PVC
V-454	INCUBATION JAR	WARM WATER	TRUE UNION BALL VALVE	3/4	125	SOCKET	MANUAL OPEN	PVC
V-455	INCUBATION JAR	WARM WATER	TRUE UNION BALL VALVE	3/4	125	SOCKET	MANUAL OPEN	PVC
V-456	INCUBATION JAR	WARM WATER	TRUE UNION BALL VALVE	3/4	125	SOCKET	MANUAL OPEN	PVC
V-457	INCUBATION JAR	WARM WATER	TRUE UNION BALL VALVE	3/4	125	SOCKET	MANUAL OPEN	PVC
V-458	INCUBATION JAR	WARM WATER	TRUE UNION BALL VALVE	3/4	125	SOCKET	MANUAL OPEN	PVC
V-459	INCUBATION JAR	WARM WATER	TRUE UNION BALL VALVE	3/4	125	SOCKET	MANUAL OPEN	PVC
V-460	INCUBATION JAR	WARM WATER	TRUE UNION BALL VALVE	3/4	125	SOCKET	MANUAL OPEN	PVC
V-461	INCUBATION JAR	WARM WATER	TRUE UNION BALL VALVE	3/4	125	SOCKET	MANUAL OPEN	PVC
V-462	INCUBATION JAR	WARM WATER	TRUE UNION BALL VALVE	3/4	125	SOCKET	MANUAL OPEN	PVC
V-463	INCUBATION JAR	WARM WATER	TRUE UNION BALL VALVE	3/4	125	SOCKET	MANUAL OPEN	PVC
V-464	INCUBATION JAR	WARM WATER	TRUE UNION BALL VALVE	3/4	125	SOCKET	MANUAL OPEN	PVC
V-465	INCUBATION JAR	WARM WATER	TRUE UNION BALL VALVE	3/4	125	SOCKET	MANUAL OPEN	PVC
V-466	INCUBATION JAR	WARM WATER	TRUE UNION BALL VALVE	3/4	125	SOCKET	MANUAL OPEN	PVC
V-467	INCUBATION JAR	WARM WATER	TRUE UNION BALL VALVE	3/4	125	SOCKET	MANUAL OPEN	PVC
V-468	INCUBATION JAR	WARM WATER	TRUE UNION BALL VALVE	3/4	125	SOCKET	MANUAL OPEN	PVC
V-469	INCUBATION JAR	WARM WATER	TRUE UNION BALL VALVE	3/4	125	SOCKET	MANUAL OPEN	PVC
V-470	INCUBATION JAR	WARM WATER	TRUE UNION BALL VALVE	3/4	125	SOCKET	MANUAL OPEN	PVC
V-471	INCUBATION JAR	WARM WATER	TRUE UNION BALL VALVE	3/4	125	SOCKET	MANUAL OPEN	PVC
V-472	INCUBATION JAR	WARM WATER	TRUE UNION BALL VALVE	3/4	125	SOCKET	MANUAL OPEN	PVC
V-473	INCUBATION	COLD WATER	TRUE UNION BALL VALVE	3/4	125	SOCKET	MANUAL OPEN	PVC
V-474	INCUBATION	COLD WATER	TRUE UNION BALL VALVE	3/4	125	SOCKET	MANUAL OPEN	PVC
V-475	INCUBATION	COLD WATER	TRUE UNION BALL VALVE	3/4	125	SOCKET	MANUAL OPEN	PVC
V-476	INCUBATION	COLD WATER	TRUE UNION BALL VALVE	3/4	125	SOCKET	MANUAL OPEN	PVC
V-477	INCUBATION	COLD WATER	TRUE UNION BALL VALVE	3/4	125	SOCKET	MANUAL OPEN	PVC
V-478	INCUBATION	COLD WATER	TRUE UNION BALL VALVE	3/4	125	SOCKET	MANUAL OPEN	PVC
V-479	INCUBATION	COLD WATER	TRUE UNION BALL VALVE	3/4	125	SOCKET	MANUAL OPEN	PVC
V-480	INCUBATION	COLD WATER	TRUE UNION BALL VALVE	3/4	125	SOCKET	MANUAL OPEN	PVC
V-481	INCUBATION	COLD WATER	TRUE UNION BALL VALVE	3/4	125	SOCKET	MANUAL OPEN	PVC
V-482	INCUBATION	COLD WATER	TRUE UNION BALL VALVE	3/4	125	SOCKET	MANUAL OPEN	PVC
V-483	INCUBATION	COLD WATER	TRUE UNION BALL VALVE	3/4	125	SOCKET	MANUAL OPEN	PVC
V-484	INCUBATION	COLD WATER	TRUE UNION BALL VALVE	3/4	125	SOCKET	MANUAL OPEN	PVC
V-485	INCUBATION	COLD WATER	TRUE UNION BALL VALVE	3/4	125	SOCKET	MANUAL OPEN	PVC
V-486	INCUBATION	COLD WATER	TRUE UNION BALL VALVE	3/4	125	SOCKET	MANUAL OPEN	PVC
V-487	INCUBATION	COLD WATER	TRUE UNION BALL VALVE	3/4	125	SOCKET	MANUAL OPEN	PVC
V-488	INCUBATION	COLD WATER	TRUE UNION BALL VALVE	3/4	125	SOCKET	MANUAL OPEN	PVC
V-489	INCUBATION	COLD WATER	TRUE UNION BALL VALVE	3/4	125	SOCKET	MANUAL OPEN	PVC
V-490	INCUBATION	COLD WATER	TRUE UNION BALL VALVE	3/4	125	SOCKET	MANUAL OPEN	PVC
V-491	INCUBATION	COLD WATER	TRUE UNION BALL VALVE	3/4	125	SOCKET	MANUAL OPEN	PVC
V-492	INCUBATION	COLD WATER	TRUE UNION BALL VALVE	3/4	125	SOCKET	MANUAL OPEN	PVC
V-493	INCUBATION	COLD WATER	TRUE UNION BALL VALVE	3/4	125	SOCKET	MANUAL OPEN	PVC
V-494	INCUBATION	COLD WATER	TRUE UNION BALL VALVE	3/4	125	SOCKET	MANUAL OPEN	PVC
V-495	INCUBATION	COLD WATER	TRUE UNION BALL VALVE	3/4	125	SOCKET	MANUAL OPEN	PVC
V-496	INCUBATION	COLD WATER	TRUE UNION BALL VALVE	3/4	125	SOCKET	MANUAL OPEN	PVC
V-497	INCUBATION	COLD WATER	TRUE UNION BALL VALVE	3/4	125	SOCKET	MANUAL OPEN	PVC
V-498	INCUBATION	COLD WATER	TRUE UNION BALL VALVE	3/4	125	SOCKET	MANUAL OPEN	PVC
V-499	INCUBATION	COLD WATER	TRUE UNION BALL VALVE	3/4	125	SOCKET	MANUAL OPEN	PVC
V-500	INCUBATION	COLD WATER	TRUE UNION BALL VALVE	3/4	125	SOCKET	MANUAL OPEN	PVC
V-501	INCUBATION	COLD WATER	TRUE UNION BALL VALVE	3/4	125	SOCKET	MANUAL OPEN	PVC
V-502	INCUBATION	COLD WATER	TRUE UNION BALL VALVE	3/4	125	SOCKET	MANUAL OPEN	PVC
V-503	INCUBATION	COLD WATER	TRUE UNION BALL VALVE	3/4	125	SOCKET	MANUAL OPEN	PVC
V-504	INCUBATION	COLD WATER	TRUE UNION BALL VALVE	3/4	125	SOCKET	MANUAL OPEN	PVC
V-505	INCUBATION	COLD WATER	TRUE UNION BALL VALVE	3/4	125	SOCKET	MANUAL OPEN	PVC
V-506	INCUBATION	COLD WATER	TRUE UNION BALL VALVE	3/4	125	SOCKET	MANUAL OPEN	PVC
V-507	INCUBATION	COLD WATER	TRUE UNION BALL VALVE	3/4	125	SOCKET	MANUAL OPEN	PVC
V-508	INCUBATION	COLD WATER	TRUE UNION BALL VALVE	3/4	125	SOCKET	MANUAL OPEN	PVC
V-509	INCUBATION /CHILLER	COLD WATER	TRUE UNION BALL VALVE	4	125	SOCKET	MANUAL OPEN	PVC
V-510	INCUBATION /CHILLER	COLD WATER	TRUE UNION BALL VALVE	4	125	SOCKET	MANUAL OPEN	PVC
V-511	INCUBATION /CHILLER	COLD WATER	TRUE UNION BALL VALVE	4	125	SOCKET	MANUAL OPEN	PVC
V-512	INCUBATION /CHILLER	COLD WATER	TRUE UNION BALL VALVE	4	125	SOCKET	MANUAL OPEN	PVC
V-513	INCUBATION	FORMALIN	TRUE UNION BALL VALVE	1/2	125	SOCKET	MANUAL OPEN	PVC
V-514	INCUBATION	FORMALIN	TRUE UNION BALL VALVE	1/2	125	SOCKET	MANUAL OPEN	PVC
V-515	INCUBATION	FORMALIN	TRUE UNION BALL VALVE	1/2	125	SOCKET	MANUAL OPEN	PVC
V-516	INCUBATION	FORMALIN	TRUE UNION BALL VALVE	1/2	125	SOCKET	MANUAL OPEN	PVC
V-517	INCUBATION	FORMALIN	TRUE UNION BALL VALVE	1/2	125	SOCKET	MANUAL OPEN	PVC
V-518	INCUBATION	FORMALIN	TRUE UNION BALL VALVE	1/2	125	SOCKET	MANUAL OPEN	PVC
V-519	INCUBATION	FORMALIN	TRUE UNION BALL VALVE	1/2	125	SOCKET	MANUAL OPEN	PVC
V-520	INCUBATION	FORMALIN	TRUE UNION BALL VALVE	1/2	125	SOCKET	MANUAL OPEN	PVC
V-521	INCUBATION	FORMALIN	TRUE UNION BALL VALVE	1/2	125	SOCKET	MANUAL OPEN	PVC

VALVE SCHEDULE

EQUIPMENT NUMBER	LOCATION	FLUID / SERVICE	TYPE	DIAMETER (in)		ENDS	ACTUATOR TYPE (NORMAL POSITION)	BODY AND DISC MATL/COMMENTS
V-522	INCUBATION	FORMALIN	TRUE UNION BALL VALVE	1/2	125	SOCKET	MANUAL OPEN	PVC
V-523	INCUBATION	FORMALIN	TRUE UNION BALL VALVE	1/2	125	SOCKET	MANUAL OPEN	PVC
V-524	INCUBATION	FORMALIN	TRUE UNION BALL VALVE	1/2	125	SOCKET	MANUAL OPEN	PVC
V-525	INCUBATION	FORMALIN	TRUE UNION BALL VALVE	1/2	125	SOCKET	MANUAL OPEN	PVC
V-526	INCUBATION	FORMALIN	TRUE UNION BALL VALVE	1/2	125	SOCKET	MANUAL OPEN	PVC
V-527	INCUBATION	FORMALIN	TRUE UNION BALL VALVE	1/2	125	SOCKET	MANUAL OPEN	PVC
V-528	INCUBATION	FORMALIN	TRUE UNION BALL VALVE	1/2	125	SOCKET	MANUAL OPEN	PVC
V-531	INCUBATION	OXYGEN	NEEDLE	3/8	125	THREADED	MANUAL OPEN	
V-532	INCUBATION	OXYGEN	NEEDLE	3/8	125	THREADED	MANUAL OPEN	
V-533	INCUBATION	OXYGEN	NEEDLE	3/8	125	THREADED	MANUAL OPEN	
V-534	INCUBATION	OXYGEN	NEEDLE	3/8	125	THREADED	MANUAL OPEN	
V-535	INCUBATION	OXYGEN	NEEDLE	3/8	125	THREADED	MANUAL OPEN	
V-536	INCUBATION	OXYGEN	NEEDLE	3/8	125	THREADED	MANUAL OPEN	
V-537	INCUBATION	OXYGEN	NEEDLE	3/8	125	THREADED	MANUAL OPEN	
V-538	INCUBATION	OXYGEN	NEEDLE	3/8	125	THREADED	MANUAL OPEN	
V-539	INCUBATION	OXYGEN	NEEDLE	3/8	125	THREADED	MANUAL OPEN	
V-540	INCUBATION	OXYGEN	NEEDLE	3/8	125	THREADED	MANUAL OPEN	
V-541	INCUBATION	OXYGEN	NEEDLE	3/8	125	THREADED	MANUAL OPEN	
V-542	INCUBATION	OXYGEN	NEEDLE	3/8	125	THREADED	MANUAL OPEN	
V-543	INCUBATION	OXYGEN	NEEDLE	3/8	125	THREADED	MANUAL OPEN	
V-544	INCUBATION	OXYGEN	NEEDLE	3/8	125	THREADED	MANUAL OPEN	
V-545	INCUBATION	OXYGEN	NEEDLE	3/8	125	THREADED	MANUAL OPEN	
V-546	INCUBATION	OXYGEN	NEEDLE	3/8	125	THREADED	MANUAL OPEN	
V-547	INCUBATION	OXYGEN	NEEDLE	3/8	125	THREADED	MANUAL OPEN	
V-548	INCUBATION	OXYGEN	NEEDLE	3/8	125	THREADED	MANUAL OPEN	
V-549	INCUBATION	OXYGEN	NEEDLE	3/8	125	THREADED	MANUAL OPEN	
V-550	INCUBATION	OXYGEN	NEEDLE	3/8	125	THREADED	MANUAL OPEN	
V-551	INCUBATION	OXYGEN	NEEDLE	3/8	125	THREADED	MANUAL OPEN	
V-552	INCUBATION	OXYGEN	NEEDLE	3/8	125	THREADED	MANUAL OPEN	
V-553	INCUBATION	OXYGEN	NEEDLE	3/8	125	THREADED	MANUAL OPEN	
V-554	INCUBATION	OXYGEN	NEEDLE	3/8	125	THREADED	MANUAL OPEN	
V-555	INCUBATION	OXYGEN	NEEDLE	3/8	125	THREADED	MANUAL OPEN	
V-556	INCUBATION	OXYGEN	NEEDLE	3/8	125	THREADED	MANUAL OPEN	
V-557	INCUBATION	OXYGEN	NEEDLE	3/8	125	THREADED	MANUAL OPEN	
V-558	INCUBATION	OXYGEN	NEEDLE	3/8	125	THREADED	MANUAL OPEN	
V-559	INCUBATION	OXYGEN	NEEDLE	3/8	125	THREADED	MANUAL OPEN	
V-560	INCUBATION	OXYGEN	NEEDLE	3/8	125	THREADED	MANUAL OPEN	
V-561	INCUBATION	OXYGEN	NEEDLE	3/8	125	THREADED	MANUAL OPEN	
V-562	INCUBATION	OXYGEN	NEEDLE	3/8	125	THREADED	MANUAL OPEN	
V-563	INCUBATION	OXYGEN	NEEDLE	3/8	125	THREADED	MANUAL OPEN	
V-564	INCUBATION	OXYGEN	NEEDLE	3/8	125	THREADED	MANUAL OPEN	
V-565	INCUBATION	OXYGEN	NEEDLE	3/8	125	THREADED	MANUAL OPEN	
V-566	INCUBATION	FORMALIN	TRUE UNION BALL VALVE	1/2	125	SOCKET	MANUAL OPEN	PVC
V-567	INCUBATION	FORMALIN	TRUE UNION BALL VALVE	1/2	125	SOCKET	MANUAL OPEN	PVC
V-568	INCUBATION	FORMALIN	TRUE UNION BALL VALVE	1/2	125	SOCKET	MANUAL OPEN	PVC
V-569	INCUBATION	FORMALIN	TRUE UNION BALL VALVE	1/2	125	SOCKET	MANUAL OPEN	PVC
V-570	INCUBATION	FORMALIN	TRUE UNION BALL VALVE	1/2	125	SOCKET	MANUAL OPEN	PVC
V-571	INCUBATION	FORMALIN	TRUE UNION BALL VALVE	1/2	125	SOCKET	MANUAL OPEN	PVC
V-572	INCUBATION	FORMALIN	TRUE UNION BALL VALVE	1/2	125	SOCKET	MANUAL OPEN	PVC
V-573	INCUBATION	FORMALIN	TRUE UNION BALL VALVE	1/2	125	SOCKET	MANUAL OPEN	PVC
V-574	INCUBATION	FORMALIN	TRUE UNION BALL VALVE	1/2	125	SOCKET	MANUAL OPEN	PVC
V-575	INCUBATION	FORMALIN	TRUE UNION BALL VALVE	1/2	125	SOCKET	MANUAL OPEN	PVC
V-576	INCUBATION	FORMALIN	TRUE UNION BALL VALVE	1/2	125	SOCKET	MANUAL OPEN	PVC
V-577	INCUBATION	FORMALIN	TRUE UNION BALL VALVE	1/2	125	SOCKET	MANUAL OPEN	PVC
V-578	INCUBATION	FORMALIN	TRUE UNION BALL VALVE	1/2	125	SOCKET	MANUAL OPEN	PVC
V-579	INCUBATION	FORMALIN	TRUE UNION BALL VALVE	1/2	125	SOCKET	MANUAL OPEN	PVC
V-580	INCUBATION	FORMALIN	TRUE UNION BALL VALVE	1/2	125	SOCKET	MANUAL OPEN	PVC
V-581	INCUBATION	FORMALIN	TRUE UNION BALL VALVE	1/2	125	SOCKET	MANUAL OPEN	PVC
V-582	INCUBATION	FORMALIN	TRUE UNION BALL VALVE	1/2	125	SOCKET	MANUAL OPEN	PVC
V-583	INCUBATION	FORMALIN	TRUE UNION BALL VALVE	1/2	125	SOCKET	MANUAL OPEN	PVC
V-584	INCUBATION	FORMALIN	TRUE UNION BALL VALVE	1/2	125	SOCKET	MANUAL OPEN	PVC
V-585	INCUBATION	FORMALIN	TRUE UNION BALL VALVE	1/2	125	SOCKET	MANUAL OPEN	PVC
V-586	INCUBATION	FORMALIN	TRUE UNION BALL VALVE	1/2	125	SOCKET	MANUAL OPEN	PVC
V-587	INCUBATION	FORMALIN	TRUE UNION BALL VALVE	1/2	125	SOCKET	MANUAL OPEN	PVC
V-588	INCUBATION	FORMALIN	TRUE UNION BALL VALVE	1/2	125	SOCKET	MANUAL OPEN	PVC
V-589	INCUBATION	FORMALIN	TRUE UNION BALL VALVE	1/2	125	SOCKET	MANUAL OPEN	PVC
V-590	INCUBATION	FORMALIN	TRUE UNION BALL VALVE	1/2	125	SOCKET	MANUAL OPEN	PVC
V-591	INCUBATION	FORMALIN	TRUE UNION BALL VALVE	1/2	125	SOCKET	MANUAL OPEN	PVC
V-592	INCUBATION	FORMALIN	TRUE UNION BALL VALVE	1/2	125	SOCKET	MANUAL OPEN	PVC
V-593	INCUBATION	FORMALIN	TRUE UNION BALL VALVE	1/2	125	SOCKET	MANUAL OPEN	PVC

REVIEWED FOR CODE COMPLIANCE
Thomas W Peterson
12/1/2023
DIVISION OF FACILITIES CONSTRUCTION AND MANAGEMENT
DFCM CODE COMPLIANCE OFFICER

NO.	REVISIONS	BY	DATE
	PUBLISHED		
C	100% DESIGN REVIEW	JT	10/23
B	90% DESIGN REVIEW	JT	9/23
A	50% DESIGN REVIEW	JT	5/23

This document or any part thereof in detail or design concept is the property of Forsgren Associates Inc. and shall not be copied without the written authorization of Forsgren Associates Inc.

DRAWN DJ
DESIGNED MEC
APPROVED
QA MLL

ATTENTION
LINE IS 2-INCHES
AT 24"x36" SIZE
IF NOT 2-INCHES, SCALE DRAWING ACCORDINGLY

PROFESSIONAL ENGINEER No. 13614104-2202 BRENT WELTON STATE OF UTAH
10/04/2023

FISHERIES EXPERIMENT STATION
UTAH DIVISION OF WILDLIFE RESOURCES
1465 WEST 200 NORTH
LOGAN, UTAH 84321

UTAH DNR WILDLIFE RESOURCES

McMillen

Blue Stakes of UTAH 811 Bluestakes.org

WARN WATER AQUACULTURE BUILDING
LOGAN HATCHERY IMPROVEMENT PROJECT

MECHANICAL SCHEDULE 5

PROJECT NO: 14-23-0005
SHEET NO: GM006
DATE: 10-2023
PAGE NO: 70

VALVE SCHEDULE								
EQUIPMENT NUMBER	LOCATION	FLUID / SERVICE	TYPE	DIAMETER (in)		ENDS	ACTUATOR TYPE (NORMAL POSITION)	BODY AND DISC MATL/COMMENTS
V-594	INCUBATION	FORMALIN	TRUE UNION BALL VALVE	1/2	125	SOCKET	MANUAL OPEN	PVC
V-595	INCUBATION	FORMALIN	TRUE UNION BALL VALVE	1/2	125	SOCKET	MANUAL OPEN	PVC
V-596	INCUBATION	FORMALIN	TRUE UNION BALL VALVE	1/2	125	SOCKET	MANUAL OPEN	PVC
V-597	INCUBATION	FORMALIN	TRUE UNION BALL VALVE	1/2	125	SOCKET	MANUAL OPEN	PVC
V-598	INCUBATION	FORMALIN	TRUE UNION BALL VALVE	1/2	125	SOCKET	MANUAL OPEN	PVC
V-599	INCUBATION	FORMALIN	TRUE UNION BALL VALVE	1/2	125	SOCKET	MANUAL OPEN	PVC
V-600	INCUBATION	FORMALIN	TRUE UNION BALL VALVE	1/2	125	SOCKET	MANUAL OPEN	PVC
V-601	INCUBATION	FORMALIN	TRUE UNION BALL VALVE	1/2	125	SOCKET	MANUAL OPEN	PVC
V-602	INCUBATION	FORMALIN	TRUE UNION BALL VALVE	1/2	125	SOCKET	MANUAL OPEN	PVC
V-603	INCUBATION / CHILLER	CHILLED WATER	GLOBE	4	125	MJ/MJ	MANUAL OPEN	PVC
V-604	INCUBATION / CHILLER	CHILLED WATER	GLOBE	4	125	MJ/MJ	MANUAL OPEN	PVC
V-605	INCUBATION / CHILLER	CHILLED WATER	GLOBE	4	125	MJ/MJ	CLOSED	PVC
V-606	INCUBATION / CHILLER	COLD WATER	GLOBE	4	125	MJ/MJ	MANUAL OPEN	
V-607	INCUBATION/ LHO	OXYGEN	GLOBE	1	125	THREADED	MANUAL OPEN	
V-608	INCUBATION/LHO	WARM WATER	FLOAT	1	125	MJ/MJ	MANUAL OPEN	
V-609	INCUBATION	FORMALIN	TRUE UNION BALL VALVE	1/2	125	SOCKET	MANUAL OPEN	PVC
V-610	INCUBATION	FORMALIN	TRUE UNION BALL VALVE	1/2	125	SOCKET	MANUAL OPEN	PVC
V-611	INCUBATION	FORMALIN	TRUE UNION BALL VALVE	1/2	125	SOCKET	MANUAL OPEN	PVC
V-612	INCUBATION	FORMALIN	TRUE UNION BALL VALVE	1/2	125	SOCKET	MANUAL OPEN	PVC
V-621	INCUBATION / CHILLER	CHILLED WATER	TRUE UNION BALL VALVE	4	125	SOCKET		
V-622	INCUBATION / CHILLER	CHILLED WATER	TRUE UNION BALL VALVE	4	125	SOCKET		
V-623	INCUBATION / CHILLER	CHILLED WATER	TRUE UNION BALL VALVE	4	125	SOCKET		
V-624	INCUBATION	FORMALIN	TRUE UNION BALL VALVE	1/2	125	SOCKET		
V-639	TRUCK FILL	WARM WATER	BUTTERFLY	4	125	FLG/FLG	MANUAL OPEN	PVC
V-640	TRUCK FILL	COLD WATER	BUTTERFLY	4	125	FLG/FLG	MANUAL OPEN	PVC
V-641	INCUBATION / CHILLER	CHILLED WATER	BUTTERFLY	4	125	FLG/FLG	MANUAL OPEN	PVC
V-642	INCUBATION / CHILLER	CHILLED WATER	BUTTERFLY	4	125	FLG/FLG	MANUAL OPEN	PVC
V-643	INCUBATION/LHO	WARM WATER	BUTTERFLY	6	125	FLG/FLG	MANUAL OPEN	PVC
V-644	INCUBATION/LHO	WARM WATER	BUTTERFLY	4	125	FLG/FLG	MANUAL OPEN	PVC
V-645	INCUBATION/LHO	WARM WATER	BUTTERFLY	6	125	FLG/FLG	MANUAL OPEN	
V-646	INCUBATION/LHO	WARM WATER	BUTTERFLY	4	125	FLG/FLG	MANUAL OPEN	
V-647	INCUBATION/EYE WASH	TEPID WATER	BUTTERFLY	1	126	SOCKET/THREADED	MANUAL OPEN	SS
V-648	INCUBATION/EYE WASH	TEPID WATER	BUTTERFLY	1	127	SOCKET/THREADED	MANUAL OPEN	SS

REVIEWED FOR CODE COMPLIANCE
Thomas W Peterson
12/14/2023
DIVISION OF FACILITIES CONSTRUCTION AND MANAGEMENT

DFCM CODE COMPLIANCE OFFICER

NO.	REVISIONS	BY	DATE
	PUBLISHED		
C	100% DESIGN REVIEW	JT	10/23
B	90% DESIGN REVIEW	JT	9/23
A	50% DESIGN REVIEW	JT	5/23

This document or any part thereof in detail or design concept is the property of Forsgren Associates Inc. and shall not be copied without the written authorization of Forsgren Associates Inc.

DRAWN DJ
DESIGNED MEC
APPROVED
QA MLL

ATTENTION
LINE IS 2-INCHES
AT 24"x36" SIZE
IF NOT 2-INCHES, SCALE DRAWING ACCORDINGLY

PROFESSIONAL ENGINEER
No. 13614104-2202
BRENT WELTON
STATE OF UTAH
10/04/2023

FISHERIES EXPERIMENT STATION
UTAH DIVISION OF WILDLIFE RESOURCES
1465 WEST 200 NORTH
LOGAN, UTAH 84321

UTAH DNR WILDLIFE RESOURCES

McMillen

Blue Stakes of UTAH 811 Bluestakes.org

WARN WATER AQUACULTURE BUILDING
LOGAN HATCHERY IMPROVEMENT PROJECT

MECHANICAL SCHEDULE 6

PROJECT NO: 14-23-0005
SHEET NO: GM007
DATE: 10-2023
PAGE NO: 71

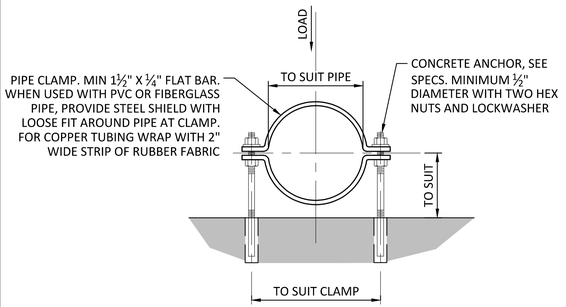

NOTES:
1. GALVANIZE ALL PARTS AFTER FABRICATION. WHERE SUBMERGED, PIPE CLAMP, NUTS, LOCKWASHERS, ANCHORS AND SHIELDS TO BE TYPE 316 STAINLESS STEEL.
2. THIS PIPE CLAMP IS LIMITED TO PIPES UP TO 4" DIAMETER INCLUSIVE.
3. FOR ADDITIONAL REQUIREMENTS SEE SPECIFICATIONS SECTION 'PIPE SUPPORTS'.

PIPE CLAMP
M101 (FOR PIPE 4" DIAMETER AND SMALLER)
SCALE: NTS

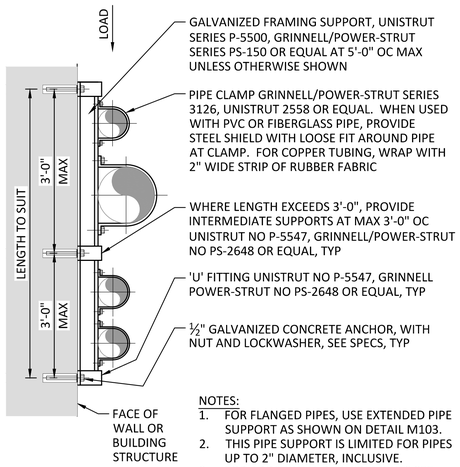

NOTES:
1. FOR FLANGED PIPES, USE EXTENDED PIPE SUPPORT AS SHOWN ON DETAIL M103.
2. THIS PIPE SUPPORT IS LIMITED FOR PIPES UP TO 2" DIAMETER, INCLUSIVE.
3. FOR ADDITIONAL REQUIREMENTS SEE SPECIFICATION SECTION 'PIPE SUPPORTS'.

FLUSH MOUNT PIPE SUPPORT
M102 (FOR PIPE 4" DIAMETER AND SMALLER)
SCALE: NTS

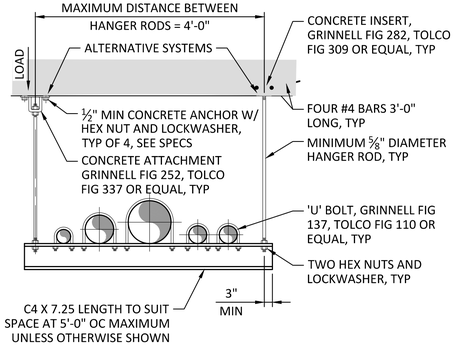

NOTES:
1. GALVANIZE ALL PARTS AFTER FABRICATION.
2. FOR ADDITIONAL REQUIREMENTS SEE SPECIFICATION SECTION 'PIPE SUPPORTS'.
3. THIS PIPE HANGER IS LIMITED TO PIPE SIZES ½" THRU 24" DIAMETER.
4. THIS PIPE HANGER NOT SUITABLE FOR PRECAST TEE BEAMS.
5. FOR PVC OR FIBERGLASS PIPE, PROVIDE STEEL SHIELD WITH LOOSE FIT AROUND PIPE AT 'U' BOLT. WRAP COPPER TUBING 360° WITH 2" WIDE STRIP OF ⅛" THICK RUBBER FABRIC.

TRAPEZE PIPE HANGER
M106 (FOR PIPE 24" DIAMETER AND SMALLER)
SCALE: NTS

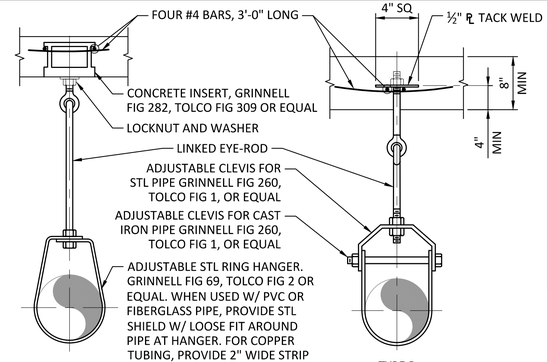

TYPE A
FOR HANGER RODS
3/4" DIA AND SMALLER

TYPE B
FOR HANGER RODS
7/8" DIA AND LARGER, AND
MIN 8" THICK CONCRETE

PIPE HANGER RODS AND SUPPORT SPACING					
PIPE DIAMETER (INCHES)	ROD DIAMETER (INCHES)	MAX SUPPORT SPACING (FEET)		WEIGHT LIMIT (LBS)	
		STL PIPE	CI PIPE	TYPE A	TYPE B
1 & SMALLER	⅜	6	10	300	610
1¼ TO 2	⅜	10	10	300	610
2½ TO 3½	½	12	10	525	1130
4 TO 5	⅝	14	10	650	1430
6, 8	¾	17	10	1000	1940
10, 12	⅞	18	-	-	3600
14, 16	1	20	-	-	3800

NOTES:
1. GALVANIZE ALL PARTS AFTER FABRICATION.
2. FOR PIPES 2" DIAMETER AND SMALLER, EYE BOLTS IN CONCRETE ANCHORS MAY BE USED SEE SPECS.
3. TYPE A - FOR CONCRETE INSERT, ALLOW 1430 LB LOAD MAXIMUM. TYPE B - FOR 4" SQ BEARING PLATE, ALLOW 3800 LB LOAD MAXIMUM.
4. CONCRETE STRENGTH TO BE 3000 PSI MINIMUM.
5. DESIGN IS FOR STATIC LOAD ONLY.
6. FOR ADDITIONAL REQUIREMENTS SEE SPECIFICATION SECTION 'PIPE SUPPORTS'.

PIPE HANGER
M107 (FOR PIPE 16" DIAMETER AND SMALLER)
SCALE: NTS

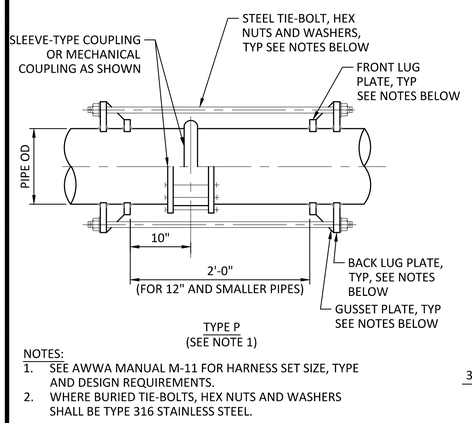

TYPE P
(SEE NOTE 1)

NOTES:
1. SEE AWWA MANUAL M-11 FOR HARNESS SET SIZE, TYPE AND DESIGN REQUIREMENTS.
2. WHERE BURIED TIE-BOLTS, HEX NUTS AND WASHERS SHALL BE TYPE 316 STAINLESS STEEL.

HARNESSED JOINT
M135
SCALE: NTS

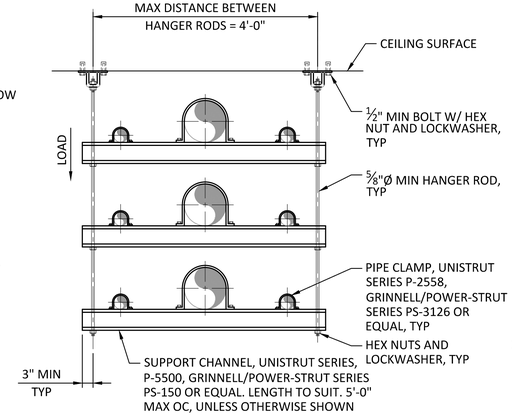

PIPE HANGER - FOR PIPE 6"ø & SMALLER
M140
SCALE: NTS

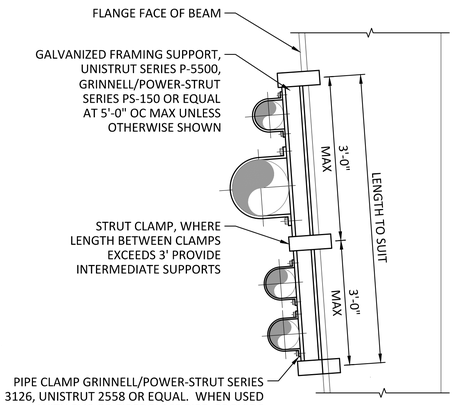

BEAM MOUNTED PIPE SUPPORT
M141
SCALE: NTS

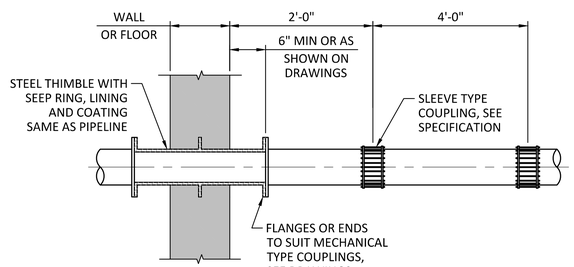

FLANGED THIMBLE
M402
SCALE: NTS

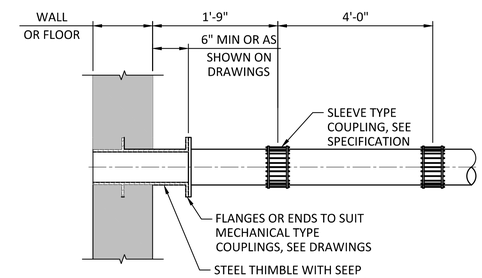

THIMBLE
M403
SCALE: NTS

REVIEWED FOR CODE COMPLIANCE
Thomas W Peterson
12/14/2023
DIVISION OF FACILITIES CONSTRUCTION AND MANAGEMENT
DFCM CODE COMPLIANCE OFFICER

	PUBLISHED		
C	100% DESIGN REVIEW	JT	10/23
B	90% DESIGN REVIEW	JT	9/23
A	50% DESIGN REVIEW	JT	5/23
NO.	REVISIONS	BY	DATE

This document or any part thereof in detail or design concept is the property of Forsgren Associates Inc. and shall not be copied without the written authorization of Forsgren Associates Inc.

DRAWN DJ
DESIGNED MEC
APPROVED
QA MLL

ATTENTION
LINE IS 2-INCHES
AT 24"x36" SIZE
IF NOT 2-INCHES, SCALE DRAWING ACCORDINGLY

PROFESSIONAL ENGINEER
No. 13614104-2202
BRENT WELTON
STATE OF UTAH
10/04/2023

FISHERIES EXPERIMENT STATION
UTAH DIVISION OF WILDLIFE RESOURCES
1465 WEST 200 NORTH
LOGAN, UTAH 84321

UTAH DNR WILDLIFE RESOURCES

McMillen

Blue Stakes of UTAH 811 Bluestakes.org

WARN WATER AQUACULTURE BUILDING
LOGAN HATCHERY IMPROVEMENT PROJECT
STANDARD MECHANICAL DETAILS 1

PROJECT NO: 14-23-0005
SHEET NO: GM008
DATE: 10-2023
PAGE NO: 72

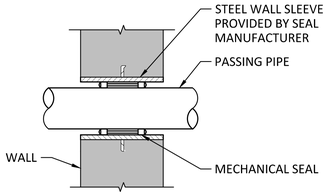

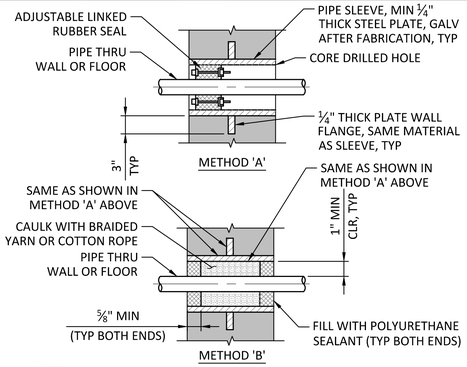

NOTE:
THESE PIPE OPENING DETAILS ARE TO BE USED IN DRY WALLS ONLY AND SHALL NOT BE USED FOR WALLS WITH WATER ON ONE OR BOTH SIDES.

M405 WALL SLEEVE
SCALE: NTS

M406 SLEEVED PIPE OPENING
SCALE: NTS

BOX COVER

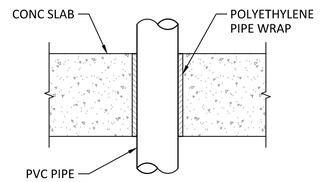

M418 FLOOR SLEEVE
SCALE: NTS

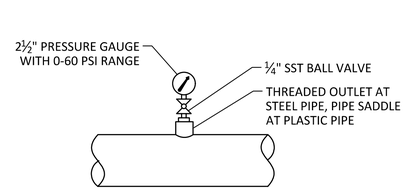

M713 PRESSURE GAUGE
SCALE: NTS

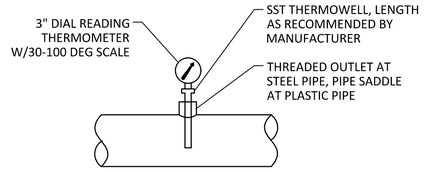

NOTE:
PROVIDE THERMOMETER DIAL FACING 90 FROM PIPE ORIENTATION ON HORIZONTAL PIPES AND DIAL FACING PARALLEL TO PIPE ORIENTATION FOR VERTICAL PIPE.

M714 THERMOMETER
SCALE: NTS

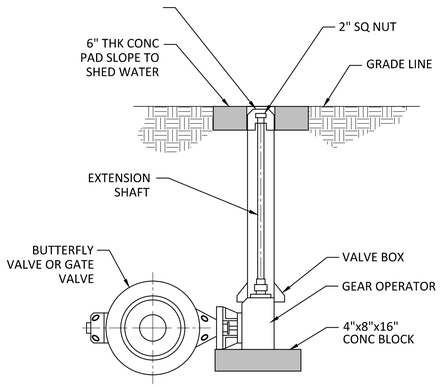

M803 BURIED VALVE AND BOX
SCALE: NTS

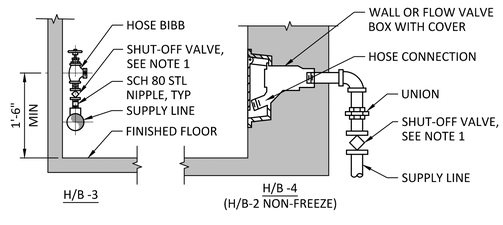

NOTE:
1. ALL HOSE VALVES TO BE CONTROLLED BY INDIVIDUAL SHUT-OFF VALVES (BALL OR PLUG VALVES) EXCEPT WHERE INDIVIDUALLY CONTROLLED BRANCH MAIN SERVES HOSE VALVES ONLY.
2. FOR SIZE AND LOCATION SEE DRAWINGS.
3. PROVIDE WARNING SIGN WHEN USED FOR NON-POTABLE WATER. SEE DETAIL M308.

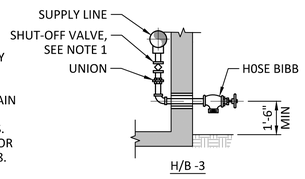

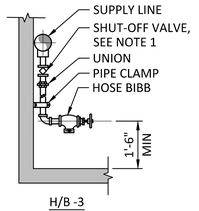

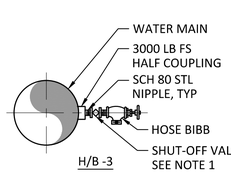

M812 HOSE BIBS
SCALE: NTS

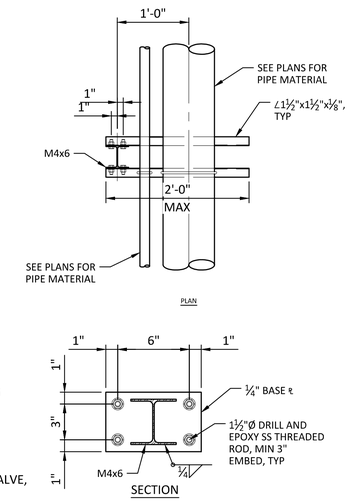

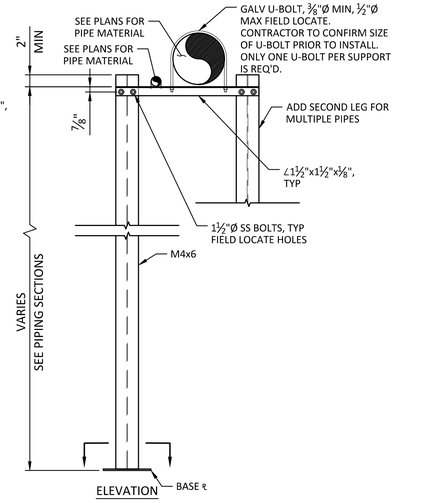

M900 ADJUSTABLE PIPE SUPPORT WITH OR WITHOUT 'U' BOLT
SCALE: NTS

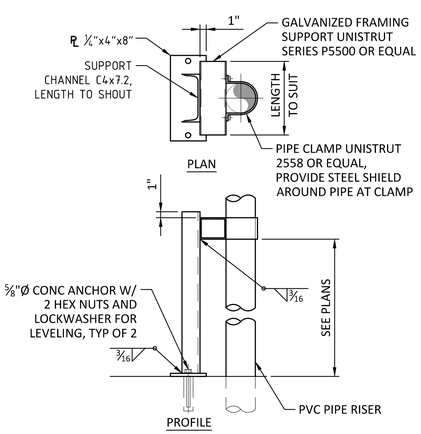

M901 VERTICAL PIPE SUPPORT
SCALE: NTS

REVIEWED FOR CODE COMPLIANCE
Thomas W Peterson
12/14/2023
DIVISION OF FACILITIES CONSTRUCTION AND MANAGEMENT
DFCM CODE COMPLIANCE OFFICER

NO.	REVISIONS	BY	DATE
	PUBLISHED		
C	100% DESIGN REVIEW	JT	10/23
B	90% DESIGN REVIEW	JT	9/23
A	50% DESIGN REVIEW	JT	5/23

This document or any part thereof in detail or design concept is the property of Forsgren Associates Inc. and shall not be copied without the written authorization of Forsgren Associates Inc.

DRAWN DJ
DESIGNED MEC
APPROVED
QA MLL

ATTENTION
LINE IS 2-INCHES
AT 24"x36" SIZE
IF NOT 2-INCHES, SCALE DRAWING ACCORDINGLY

PROFESSIONAL ENGINEER
No. 13614104-2202
BRENT WELTON
STATE OF UTAH
10/04/2023

FISHERIES EXPERIMENT STATION
UTAH DIVISION OF WILDLIFE RESOURCES
1465 WEST 200 NORTH
LOGAN, UTAH 84321

UTAH DNR WILDLIFE RESOURCES

McMillen

Blue Stakes of UTAH 811 Bluestakes.org

WARN WATER AQUACULTURE BUILDING
LOGAN HATCHERY IMPROVEMENT PROJECT
STANDARD MECHANICAL DETAILS 2

PROJECT NO: 14-23-0005
SHEET NO: GM009
DATE: 10-2023
PAGE NO: 73

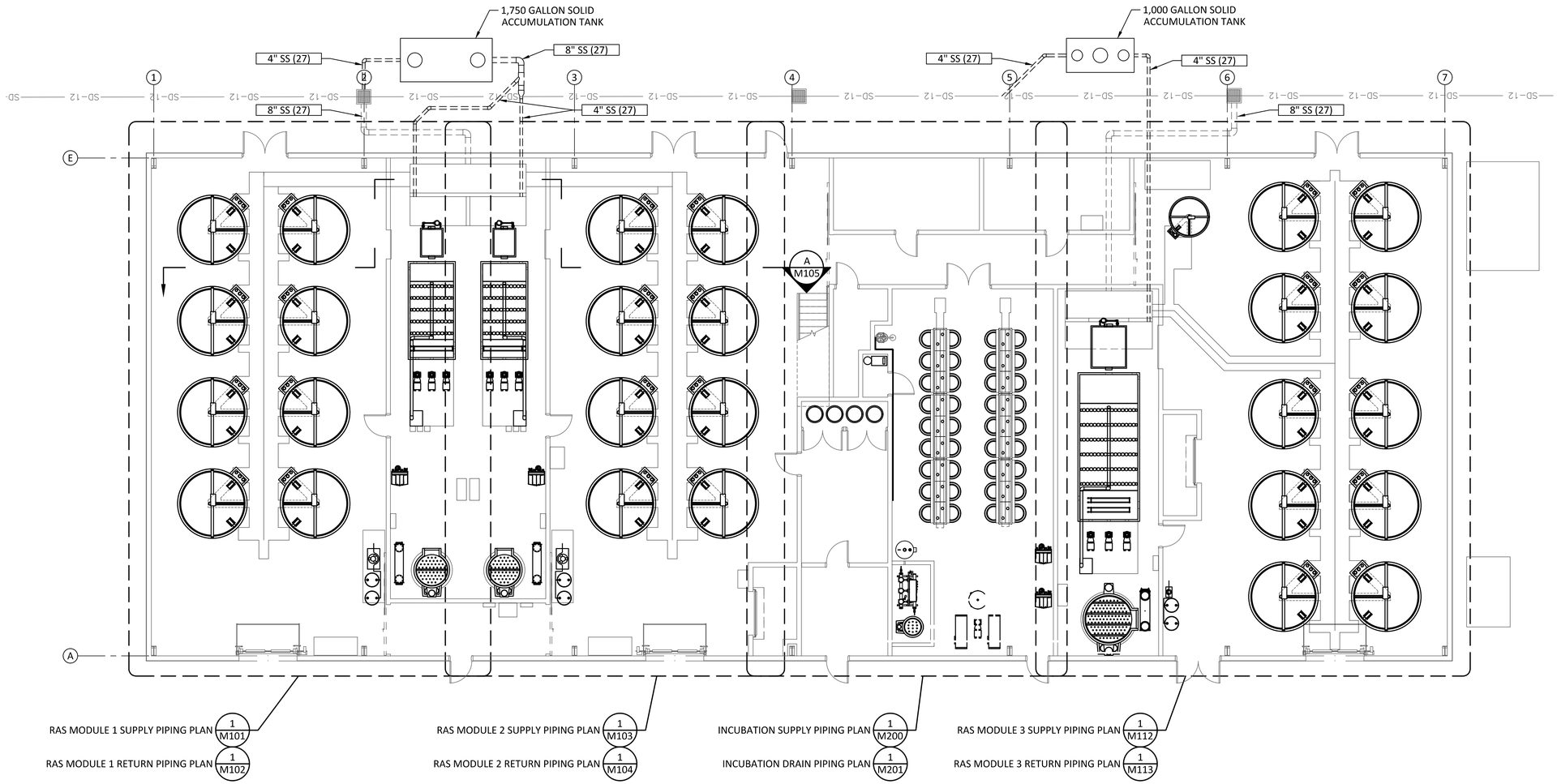

HATCHERY BUILDING MECHANICAL KEY PLAN

SCALE: 1/8"= 1'-0" 0' 8' 16'

N

REVIEWED FOR CODE COMPLIANCE
Thomas W Peterson
12/14/2023
DIVISION OF FACILITIES CONSTRUCTION AND MANAGEMENT

DFCM CODE COMPLIANCE OFFICER

NO.	REVISIONS	BY	DATE
	PUBLISHED		
C	100% DESIGN REVIEW	JT	10/23
B	90% DESIGN REVIEW	JT	9/23
A	50% DESIGN REVIEW	JT	5/23

This document or any part thereof in detail or design concept is the property of Forsgren Associates Inc. and shall not be copied without the written authorization of Forsgren Associates Inc.

DRAWN DJ
DESIGNED MEC
APPROVED
QA MLL

ATTENTION
LINE IS 2-INCHES
AT 24"x36" SIZE
IF NOT 2-INCHES, SCALE DRAWING ACCORDINGLY

PROFESSIONAL ENGINEER No. 13614104-2202 BRENT WELTON STATE OF UTAH
10/04/2023

FISHERIES EXPERIMENT STATION
UTAH DIVISION OF WILDLIFE RESOURCES
1465 WEST 200 NORTH
LOGAN, UTAH 84321

UTAH DNR WILDLIFE RESOURCES

McMillen

Blue Stakes of UTAH 811 Bluestakes.org

WARN WATER AQUACULTURE BUILDING
LOGAN HATCHERY IMPROVEMENT PROJECT

MECHANICAL GENERAL LAYOUT

PROJECT NO: 14-23-0005
SHEET NO: M001
DATE: 10-2023
PAGE NO: 74

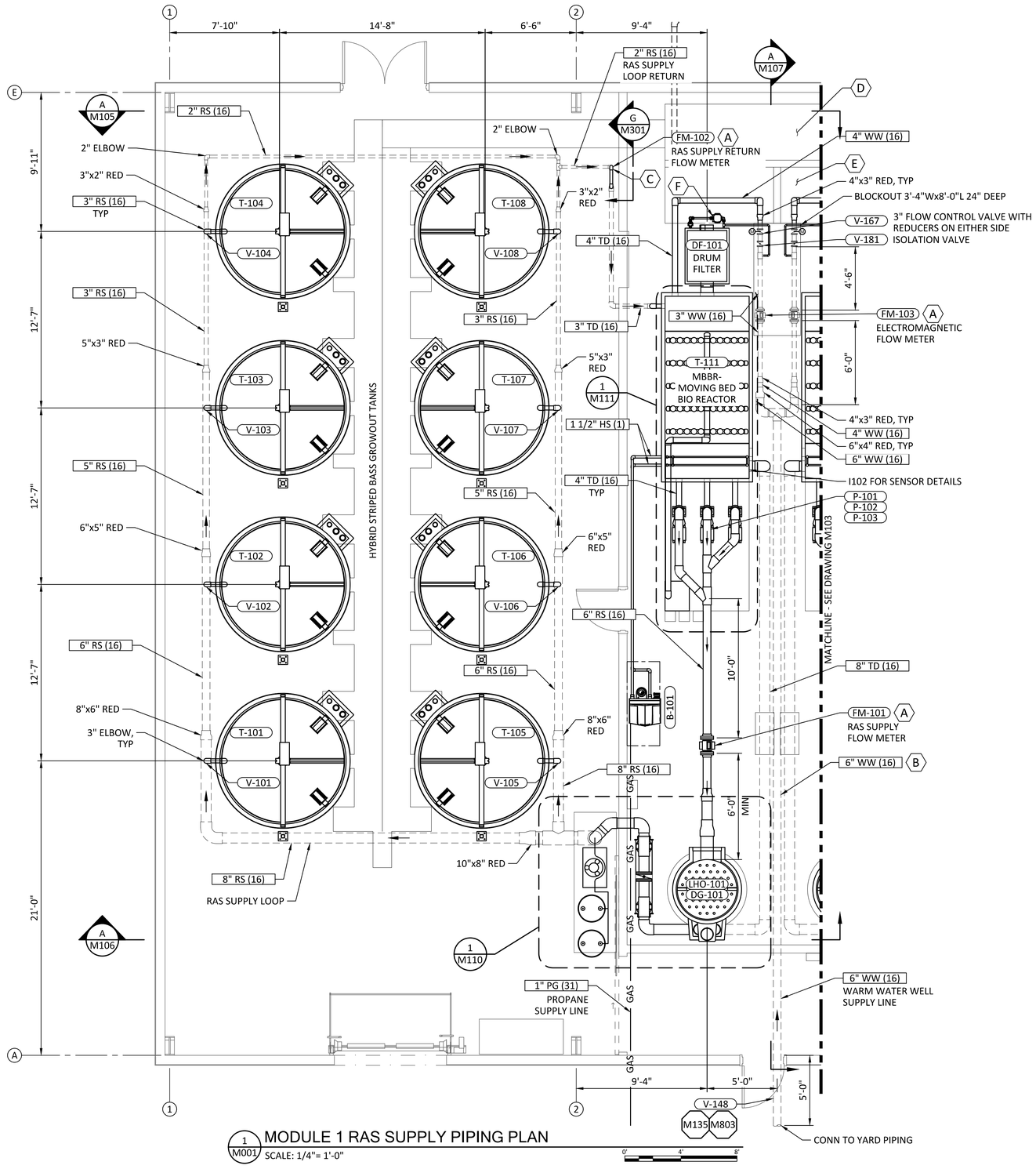

1 M001 MODULE 1 RAS SUPPLY PIPING PLAN
SCALE: 1/4"= 1'-0"

SHEET KEY NOTES:

A FLOW METERS TO BE INSTALLED WITH A MINIMUM OF 10 PIPE DIAMETERS OF STRAIGHT PIPE UPSTREAM AND A MINIMUM OF 5 PIPE DIAMETER OF STRAIGHT PIPE DOWNSTREAM.

B MAKE-UP WATER.

C RAS SUPPLY LOOP RETURN LEG W/ FLOW METER.

D SUMP TO STORM DRAIN.

E BIO FILTER OVER FLOW SUMP AND FUTURE ENERGY RECOVERY OPTION.

F BACK WASH PUMP FOR DRUM FILTER. PLUMB TO BOTH PROCESS WATER AND WW MAKEUP LINE.

REVIEWED FOR CODE COMPLIANCE
Thomas W Peterson
12/14/2023
DIVISION OF FACILITIES CONSTRUCTION AND MANAGEMENT
DFCM CODE COMPLIANCE OFFICER

NO.	REVISIONS	BY	DATE
C	100% DESIGN REVIEW	JT	10/23
B	90% DESIGN REVIEW	JT	9/23
A	50% DESIGN REVIEW	JT	5/23

This document or any part thereof in detail or design concept is the property of Forsgren Associates Inc. and shall not be copied without the written authorization of Forsgren Associates Inc.

DRAWN DJ
DESIGNED MEC
APPROVED
QA MLL

ATTENTION
LINE IS 2-INCHES
AT 24"x36" SIZE
IF NOT 2-INCHES, SCALE DRAWING ACCORDINGLY

PROFESSIONAL ENGINEER
No. 13614104-2202
BRENT WELTON
STATE OF UTAH
10/04/2023

FISHERIES EXPERIMENT STATION
UTAH DIVISION OF WILDLIFE RESOURCES
1465 WEST 200 NORTH
LOGAN, UTAH 84321

UTAH DNR WILDLIFE RESOURCES

McMillen

Blue Stakes of UTAH 811 Bluestakes.org

WARN WATER AQUACULTURE BUILDING
LOGAN HATCHERY IMPROVEMENT PROJECT

HATCHERY BUILDING MODULE 1
RAS SUPPLY PIPING PLAN

PROJECT NO: 14-23-0005
SHEET NO: M101
DATE: 10-2023
PAGE NO: 75

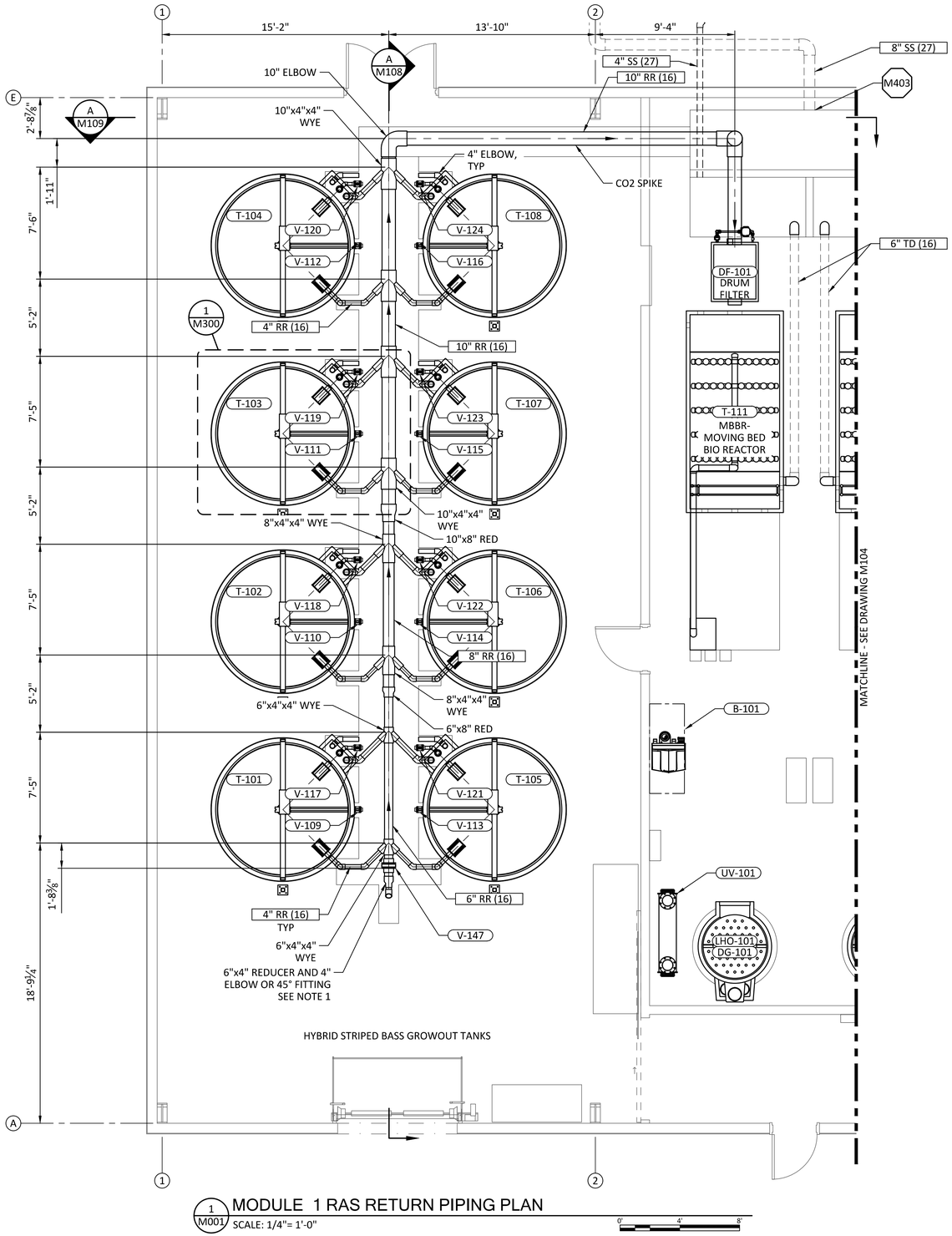

1 M001 MODULE 1 RAS RETURN PIPING PLAN

SCALE: 1/4"= 1'-0"

0' 4' 8'

SHEET NOTES:

1. CLEANING OF DRAIN HEADER MAY BE ACCOMPLISHED DURING FISH PRODUCTION BY REMOVING THE GRATING ACCESS, CONNECTING A TEMPORARY PIPE AND THEN OPENING THE VALVE. A PIPE CLEANING DEVICE (EITHER A BRUSH OF HIGH PRESSURE NOZZLE) MAY BE INSERTED TO CLEAN THE RAS RETURN TRUNK LINE.

REVIEWED FOR CODE COMPLIANCE
Thomas W Peterson
12/14/2023
DIVISION OF FACILITIES CONSTRUCTION AND MANAGEMENT

DFCM CODE COMPLIANCE OFFICER

NO.	REVISIONS	BY	DATE
	PUBLISHED		
C	100% DESIGN REVIEW	JT	10/23
B	90% DESIGN REVIEW	JT	9/23
A	50% DESIGN REVIEW	JT	5/23

This document or any part thereof in detail or design concept is the property of Forsgren Associates Inc. and shall not be copied without the written authorization of Forsgren Associates Inc.

DRAWN DJ
DESIGNED MEC
APPROVED
QA MLL

ATTENTION
LINE IS 2-INCHES
AT 24"x36" SIZE
IF NOT 2-INCHES, SCALE DRAWING ACCORDINGLY

PROFESSIONAL ENGINEER No. 13614104-2202 BRENT WELTON STATE OF UTAH
10/04/2023

FISHERIES EXPERIMENT STATION
UTAH DIVISION OF WILDLIFE RESOURCES
1465 WEST 200 NORTH
LOGAN, UTAH 84321

UTAH DNR WILDLIFE RESOURCES

McMillen

Blue Stakes of UTAH 811 Bluestakes.org

WARN WATER AQUACULTURE BUILDING
LOGAN HATCHERY IMPROVEMENT PROJECT

HATCHERY BUILDING MODULE 1
RAS RETURN PIPING PLAN

PROJECT NO: 14-23-0005
SHEET NO: M102
DATE: 10-2023
PAGE NO: 76

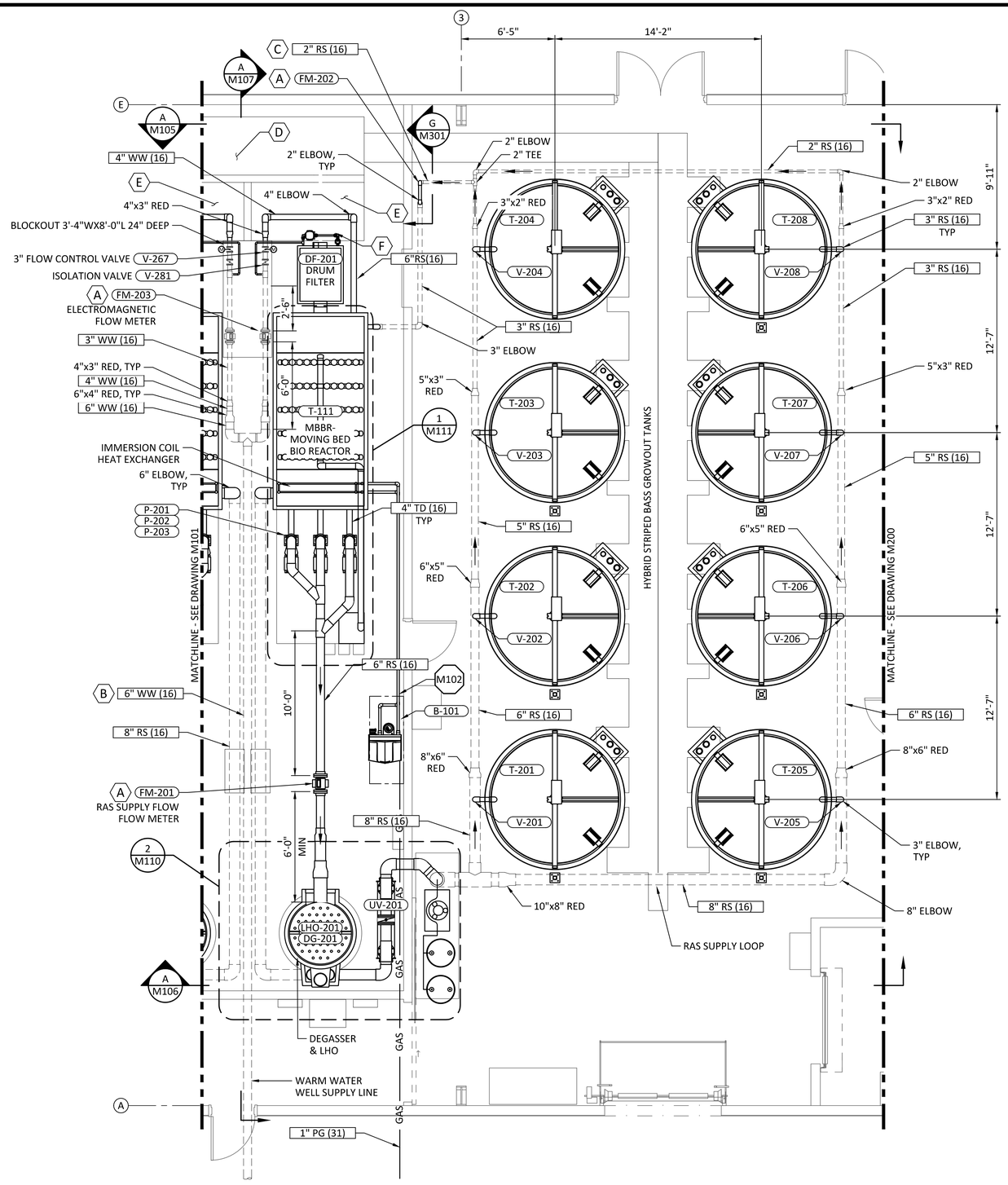

1 M001 MODULE 2 RAS SUPPLY PIPING PLAN

SCALE: 1/4"= 1'-0"

0' 4' 8'

SHEET KEY NOTES:

A FLOW METERS TO BE INSTALLED WITH A MINIMUM OF 10 PIPE DIAMETERS OF STRAIGHT PIPE UPSTREAM AND A MINIMUM OF 5 PIPE DIAMETER OF STRAIGHT PIPE DOWNSTREAM.

B MAKE-UP WATER.

C RAS SUPPLY LOOP RETURN LEG W/ FLOW METER. ROASEMOUNT 8705025 FLANGED MAGNETICE FLOW METER SENSOR, 2.5 INCH (DN65)

D SUMP TO STORM DRAIN.

E BIO FILTER OVER FLOW SUMP AND FUTURE ENERGY RECOVERY OPTION.

F BACK WASH PUMP FOR DRUM FILTER. PLUMB TO BOTH PROCESS WATER AND WW MAKEUP LINE.

REVIEWED FOR CODE COMPLIANCE
Thomas W Peterson
12/14/2023
DIVISION OF FACILITIES CONSTRUCTION AND MANAGEMENT

DFCM CODE COMPLIANCE OFFICER

NO.	REVISIONS	BY	DATE
	PUBLISHED		
C	100% DESIGN REVIEW	JT	10/23
B	90% DESIGN REVIEW	JT	9/23
A	50% DESIGN REVIEW	JT	5/23

This document or any part thereof in detail or design concept is the property of Forsgren Associates Inc. and shall not be copied without the written authorization of Forsgren Associates Inc.

DRAWN DJ
DESIGNED MEC
APPROVED
QA MLL

ATTENTION
LINE IS 2-INCHES
AT 24"x36" SIZE
IF NOT 2-INCHES, SCALE DRAWING ACCORDINGLY

PROFESSIONAL ENGINEER No. 13614104-2202 BRENT WELTON STATE OF UTAH
10/04/2023

FISHERIES EXPERIMENT STATION
UTAH DIVISION OF WILDLIFE RESOURCES
1465 WEST 200 NORTH
LOGAN, UTAH 84321

UTAH DNR WILDLIFE RESOURCES

McMillen

Blue Stakes of UTAH 811 bluestakes.org

WARN WATER AQUACULTURE BUILDING
LOGAN HATCHERY IMPROVEMENT PROJECT
HATCHERY BUILDING MODULE 2
RAS SUPPLY PIPING PLAN

PROJECT NO: 14-23-0005
SHEET NO: M103
DATE: 10-2023
PAGE NO: 77

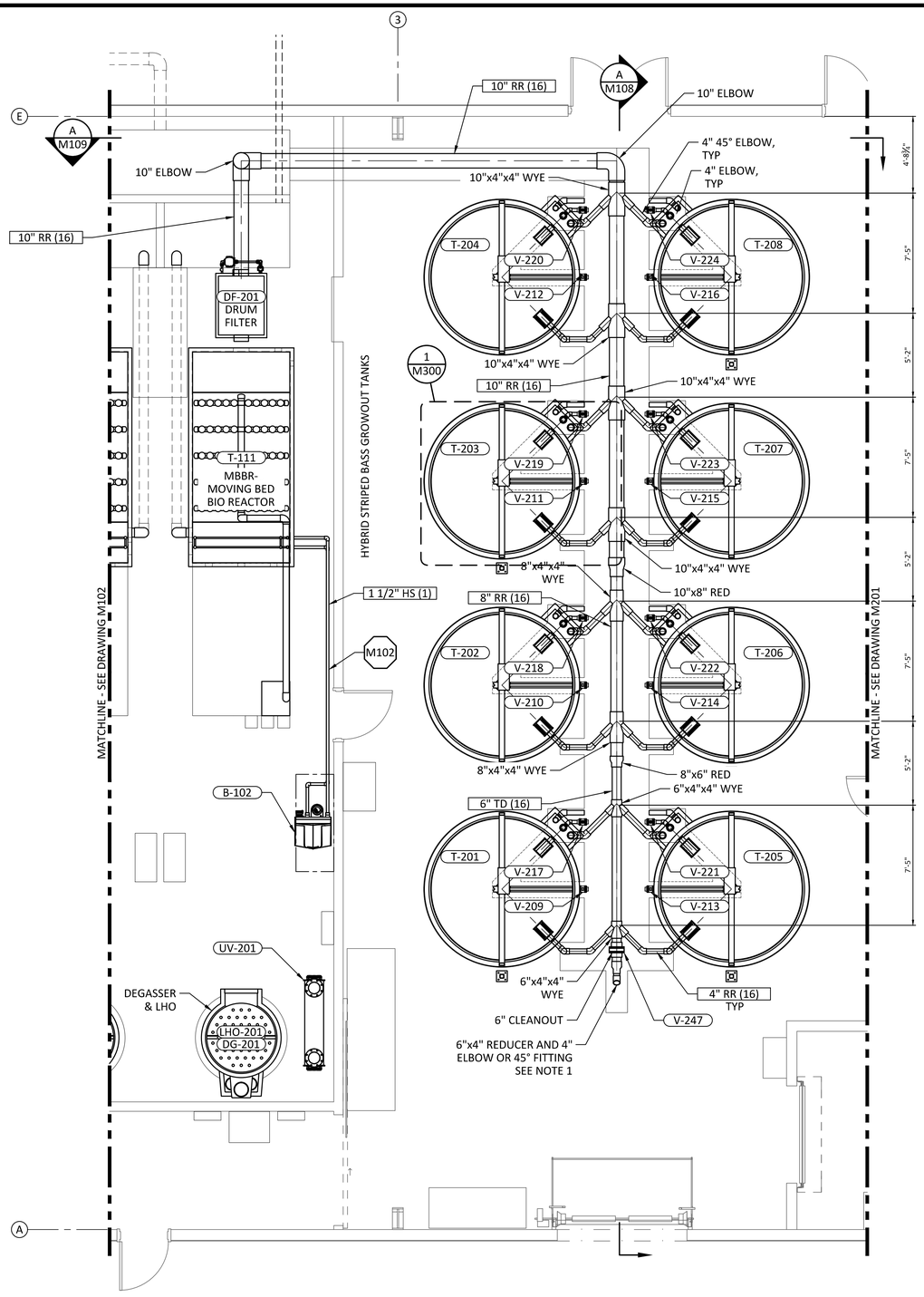

1 M001 MODULE 2 RAS RETURN PIPING PLAN

SCALE: 1/4"= 1'-0"

0' 4' 8'

SHEET NOTES:

1. CLEANING OF DRAIN HEADER MAY BE ACCOMPLISHED DURING FISH PRODUCTION BY REMOVING THE GRATING ACCESS, CONNECTING A TEMPORARY PIPE AND THEN OPENING THE VALVE. A PIPE CLEANING DEVICE (EITHER A BRUSH OF HIGH PRESSURE NOZZLE) MAY BE INSERTED TO CLEAN THE RAS RETURN TRUNK LINE.

REVIEWED FOR CODE COMPLIANCE
Thomas W Peterson
12/14/2023
DIVISION OF FACILITIES CONSTRUCTION AND MANAGEMENT

DFCM CODE COMPLIANCE OFFICER

NO.	REVISIONS	BY	DATE
	PUBLISHED		
C	100% DESIGN REVIEW	JT	10/23
B	90% DESIGN REVIEW	JT	9/23
A	50% DESIGN REVIEW	JT	5/23

This document or any part thereof in detail or design concept is the property of Forsgren Associates Inc. and shall not be copied without the written authorization of Forsgren Associates Inc.

DRAWN DJ
DESIGNED MEC
APPROVED
QA MLL

ATTENTION
LINE IS 2-INCHES
AT 24"x36" SIZE
IF NOT 2-INCHES, SCALE DRAWING ACCORDINGLY

PROFESSIONAL ENGINEER
No. 13614104-2202
BRENT WELTON
STATE OF UTAH
10/04/2023

FISHERIES EXPERIMENT STATION
UTAH DIVISION OF WILDLIFE RESOURCES
1465 WEST 200 NORTH
LOGAN, UTAH 84321

UTAH DNR WILDLIFE RESOURCES

McMillen

Blue Stakes of UTAH 811 Bluestakes.org

WARN WATER AQUACULTURE BUILDING
LOGAN HATCHERY IMPROVEMENT PROJECT
HATCHERY BUILDING MODULE 2
RAS RETURN PIPING PLAN

PROJECT NO: 14-23-0005
SHEET NO: M104
DATE: 10-2023
PAGE NO: 78

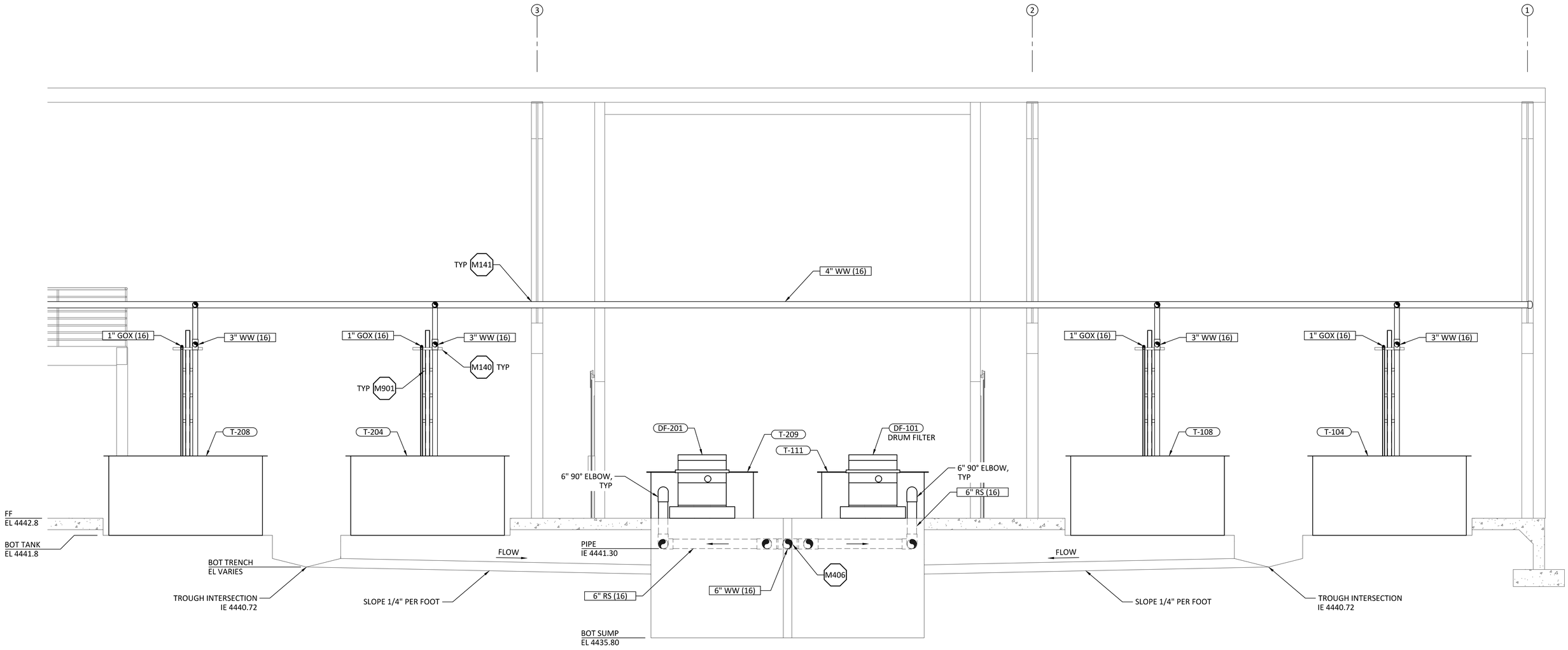

A / M001 MODULE 1 & 2 RAS SUPPLY SECTION

SCALE: 3/8"= 1'-0"

0' 2' 4'

REVIEWED FOR CODE COMPLIANCE
Thomas W Peterson
12/14/2023
DIVISION OF FACILITIES CONSTRUCTION AND MANAGEMENT

DFCM CODE COMPLIANCE OFFICER

NO.	REVISIONS	BY	DATE
	PUBLISHED		
C	100% DESIGN REVIEW	JT	10/23
B	90% DESIGN REVIEW	JT	9/23
A	50% DESIGN REVIEW	JT	5/23

This document or any part thereof in detail or design concept is the property of Forsgren Associates Inc. and shall not be copied without the written authorization of Forsgren Associates Inc.

DRAWN DJ
DESIGNED MEC
APPROVED
QA MLL

ATTENTION
LINE IS 2-INCHES
AT 24"x36" SIZE
IF NOT 2-INCHES, SCALE DRAWING ACCORDINGLY

PROFESSIONAL ENGINEER
No. 13814104-2202
BRENT WELTON
STATE OF UTAH
10/04/2023

FISHERIES EXPERIMENT STATION
UTAH DIVISION OF WILDLIFE RESOURCES
1465 WEST 200 NORTH
LOGAN, UTAH 84321

UTAH DNR WILDLIFE RESOURCES

McMillen

Blue Stakes of UTAH 811 Bluestakes.org

WARN WATER AQUACULTURE BUILDING
LOGAN HATCHERY IMPROVEMENT PROJECT

HATCHERY BUILDING MODULE 1 AND 2
SECTIONS AND DETAILS 1

PROJECT NO: 14-23-0005
SHEET NO: M105
DATE: 10-2023
PAGE NO: 79

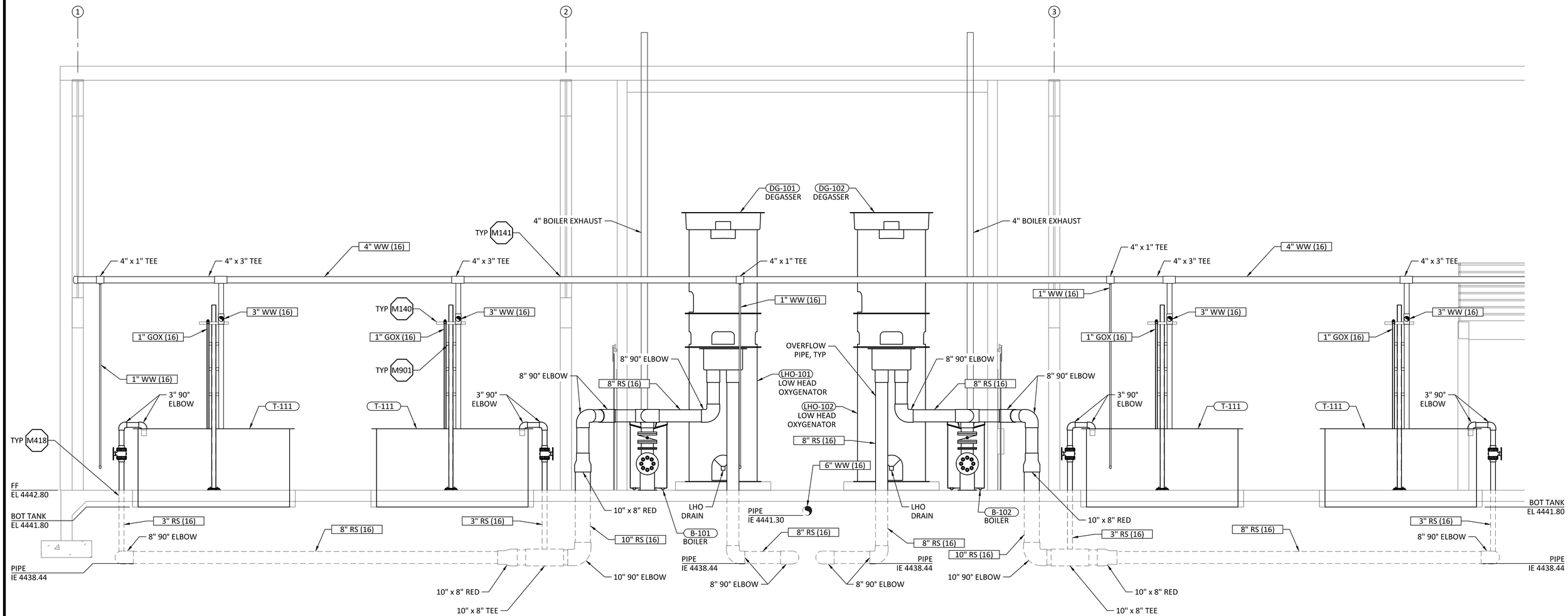

A M101 MODULE 1 & 2 RAS SUPPLY SECTION

SCALE: 3/8"= 1'-0" 0' 2' 4'

REVIEWED FOR CODE COMPLIANCE
Thomas W Peterson
12/14/2023
DIVISION OF FACILITIES CONSTRUCTION AND MANAGEMENT

DFCM CODE COMPLIANCE OFFICER

NO.	REVISIONS	BY	DATE
	PUBLISHED		
C	100% DESIGN REVIEW	JT	10/23
B	90% DESIGN REVIEW	JT	9/23
A	50% DESIGN REVIEW	JT	5/23

This document or any part thereof in detail or design concept is the property of Forsgren Associates Inc. and shall not be copied without the written authorization of Forsgren Associates Inc.

DRAWN DJ
DESIGNED MEC
APPROVED
QA MLL

ATTENTION
LINE IS 2-INCHES
AT 24"x36" SIZE
IF NOT 2-INCHES, SCALE DRAWING ACCORDINGLY

PROFESSIONAL ENGINEER
No. 13614104-2202
BRENT WELTON
STATE OF UTAH
10/04/2023

FISHERIES EXPERIMENT STATION
UTAH DIVISION OF WILDLIFE RESOURCES
1465 WEST 200 NORTH
LOGAN, UTAH 84321

UTAH DNR WILDLIFE RESOURCES

McMillen

Blue Stakes of UTAH 811 Bluestakes.org

WARN WATER AQUACULTURE BUILDING
LOGAN HATCHERY IMPROVEMENT PROJECT
HATCHERY BUILDING MODULE 1 AND 2 SECTIONS AND DETAIL 2

PROJECT NO: 14-23-0005
SHEET NO: M106
DATE: 10-2023
PAGE NO: 80

SHEET NOTES:

1. AN UPWELLING CONNECTION TO THE GAS CONTROL COLUMN IS ALSO ACCEPTABLE.

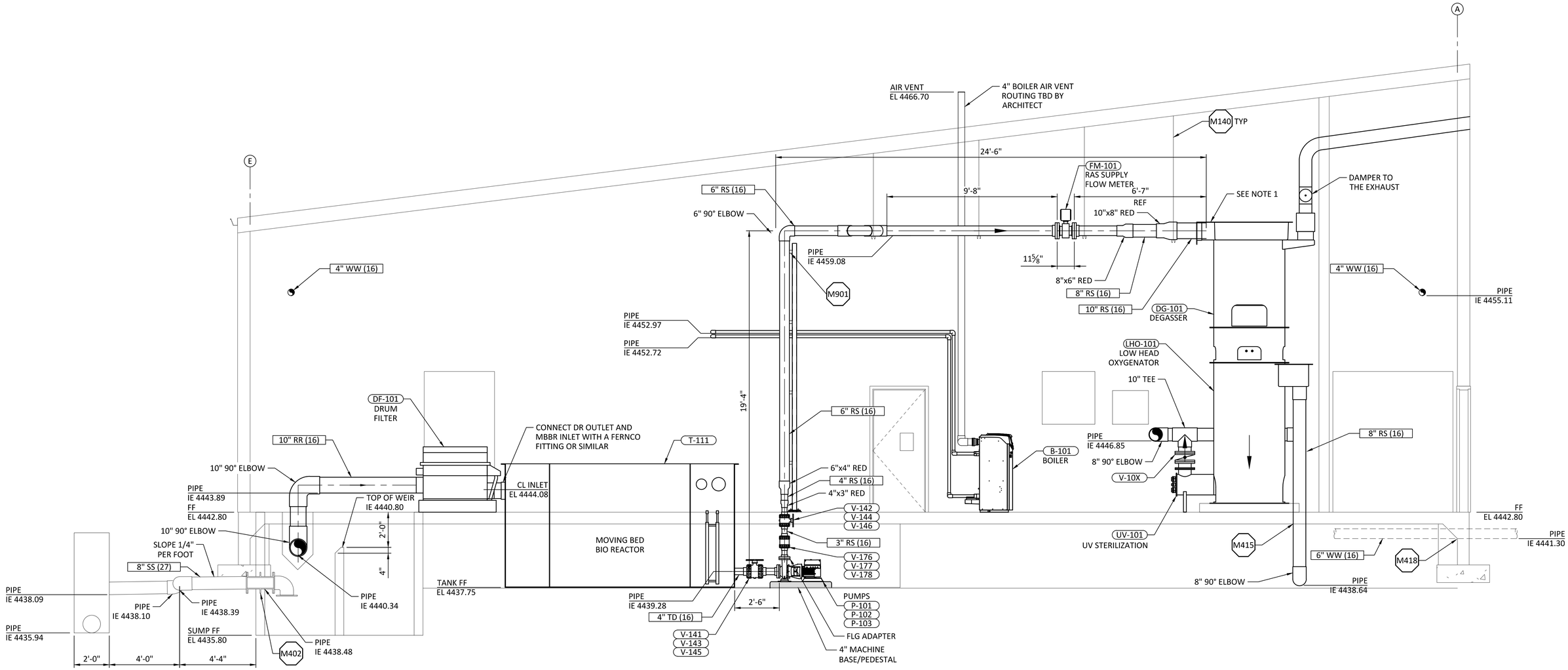

A/M101 MODULE 1 AND 2 RAS SUPPLY SECTION
SCALE: 3/8"= 1'-0"

REVIEWED FOR CODE COMPLIANCE
Thomas W Peterson
12/1/2023
DIVISION OF FACILITIES CONSTRUCTION AND MANAGEMENT
DFCM CODE COMPLIANCE OFFICER

	PUBLISHED		
C	100% DESIGN REVIEW	JT	10/23
B	90% DESIGN REVIEW	JT	9/23
A	50% DESIGN REVIEW	JT	5/23
NO.	REVISIONS	BY	DATE

This document or any part thereof in detail or design concept is the property of Forsgren Associates Inc. and shall not be copied without the written authorization of Forsgren Associates Inc.

DRAWN DJ
DESIGNED MEC
APPROVED
QA MLL

ATTENTION
LINE IS 2-INCHES
AT 24"x36" SIZE
IF NOT 2-INCHES, SCALE DRAWING ACCORDINGLY

PROFESSIONAL ENGINEER
No. 13614104-2202
BRENT WELTON
STATE OF UTAH
10/04/2023

FISHERIES EXPERIMENT STATION
UTAH DIVISION OF WILDLIFE RESOURCES
1465 WEST 200 NORTH
LOGAN, UTAH 84321

UTAH DNR WILDLIFE RESOURCES

McMillen

Blue Stakes of UTAH 811 Bluestakes.org

WARN WATER AQUACULTURE BUILDING
LOGAN HATCHERY IMPROVEMENT PROJECT
HATCHERY BUILDING MODULE 1 AND 2
SECTIONS AND DETAILS 3

PROJECT NO: 14-23-0005
SHEET NO: M107
DATE: 10-2023
PAGE NO: 81

SHEET NOTES:

1. CLEANING OF DRAIN HEADER MAY BE ACCOMPLISHED DURING FISH PRODUCTION BY REMOVING THE GRATING ACCESS, CONNECTING A TEMPORARY PIPE AND THEN OPENING THE VALVE. A PIPE CLEANING DEVICE (EITHER A BRUSH OF HIGH PRESSURE NOZZLE) MAY BE INSERTED TO CLEAN THE RAS RETURN TRUNK LINE.

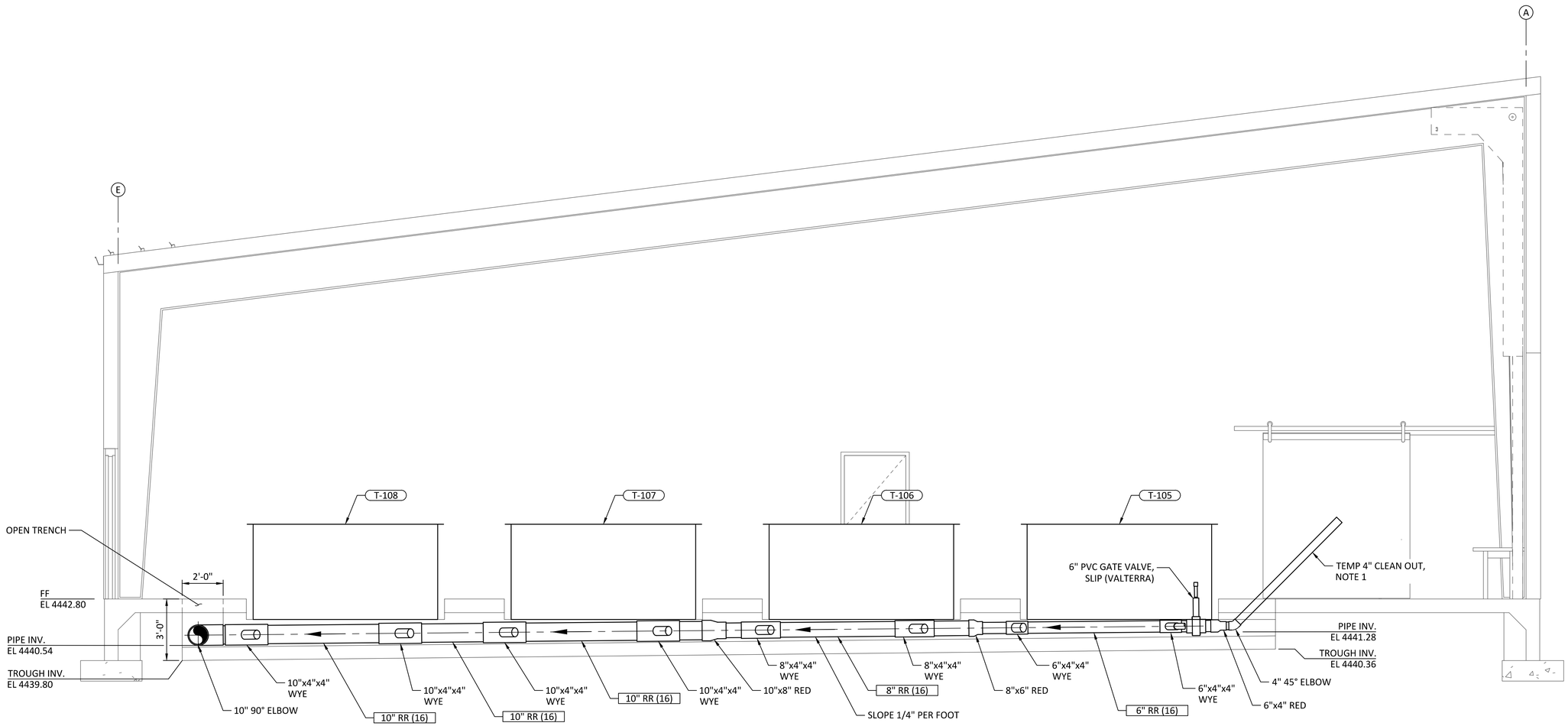

A / M102 MODULE 1 & 2 RAS RETURN SECTION
SCALE: 3/8"= 1'-0"

REVIEWED FOR CODE COMPLIANCE
Thomas W Peterson
12/14/2023
DIVISION OF FACILITIES CONSTRUCTION AND MANAGEMENT
DFCM CODE COMPLIANCE OFFICER

NO.	PUBLISHED / REVISIONS	BY	DATE
C	100% DESIGN REVIEW	JT	10/23
B	90% DESIGN REVIEW	JT	9/23
A	50% DESIGN REVIEW	JT	5/23

This document or any part thereof in detail or design concept is the property of Forsgren Associates Inc. and shall not be copied without the written authorization of Forsgren Associates Inc.

DRAWN DJ
DESIGNED MEC
APPROVED
QA MLL

ATTENTION
LINE IS 2-INCHES
AT 24"x36" SIZE
IF NOT 2-INCHES, SCALE DRAWING ACCORDINGLY

PROFESSIONAL ENGINEER — No. 13614104-2202 — BRENT WELTON — STATE OF UTAH
10/04/2023

FISHERIES EXPERIMENT STATION
UTAH DIVISION OF WILDLIFE RESOURCES
1465 WEST 200 NORTH
LOGAN, UTAH 84321

UTAH DNR WILDLIFE RESOURCES

McMillen

Blue Stakes of UTAH 811 — Bluestakes.org

WARN WATER AQUACULTURE BUILDING
LOGAN HATCHERY IMPROVEMENT PROJECT
HATCHERY BUILDING MODULE 1 AND 2 SECTIONS AND DETAILS 4

PROJECT NO: 14-23-0005
SHEET NO: M108
DATE: 10-2023
PAGE NO: 82

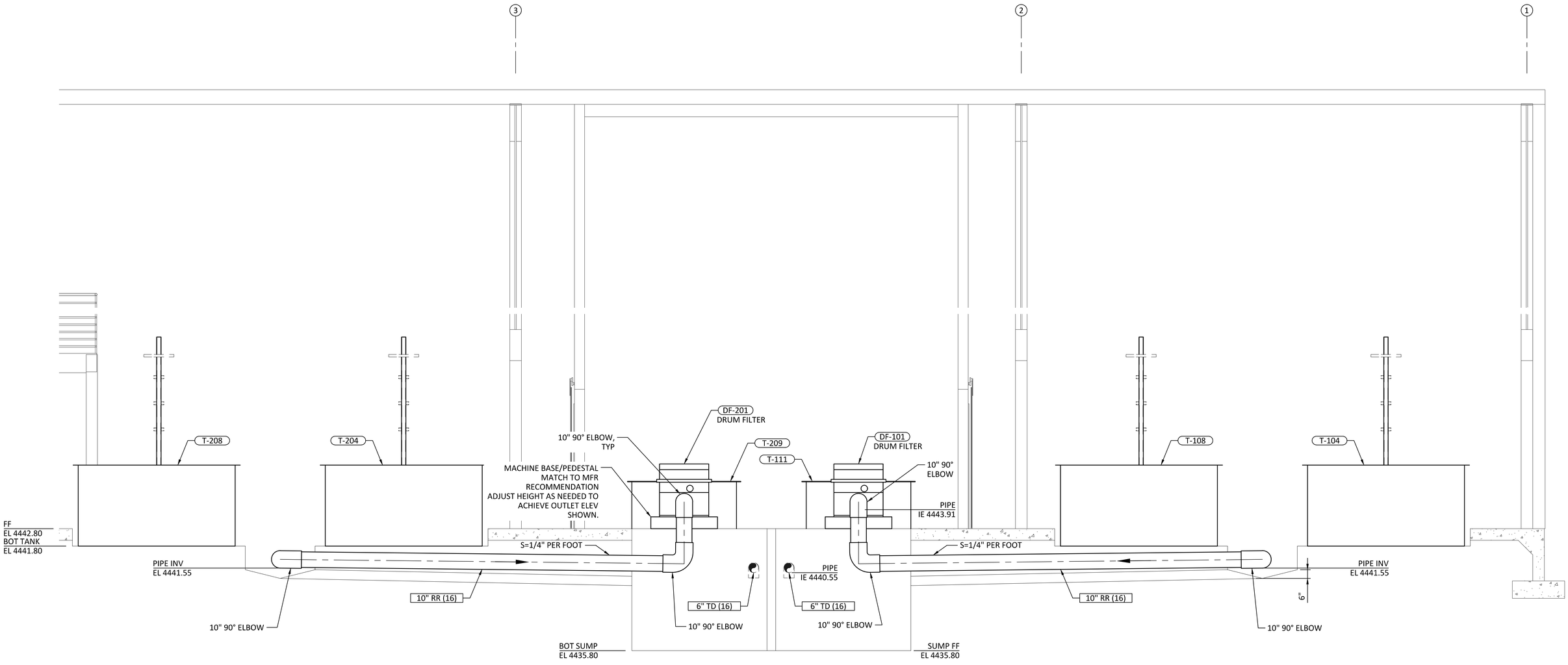

A M102 MODULE 1 & 2 RAS RETURN SECTION

SCALE: 3/8"= 1'-0"

0' 2' 4'

REVIEWED FOR CODE COMPLIANCE
Thomas W Peterson
12/14/2023
DIVISION OF FACILITIES CONSTRUCTION AND MANAGEMENT

DFCM CODE COMPLIANCE OFFICER

PUBLISHED			
C	100% DESIGN REVIEW	JT	10/23
B	90% DESIGN REVIEW	JT	9/23
A	50% DESIGN REVIEW	JT	5/23
NO.	REVISIONS	BY	DATE

This document or any part thereof in detail or design concept is the property of Forsgren Associates Inc. and shall not be copied without the written authorization of Forsgren Associates Inc.

DRAWN DJ
DESIGNED MEC
APPROVED
QA MLL

ATTENTION
LINE IS 2-INCHES
AT 24"x36" SIZE
IF NOT 2-INCHES, SCALE DRAWING ACCORDINGLY

PROFESSIONAL ENGINEER
No. 13614104-2202
BRENT WELTON
STATE OF UTAH
10/04/2023

FISHERIES EXPERIMENT STATION
UTAH DIVISION OF WILDLIFE RESOURCES
1465 WEST 200 NORTH
LOGAN, UTAH 84321

UTAH DNR WILDLIFE RESOURCES

McMillen

Blue Stakes of UTAH 811 Bluestakes.org

WARN WATER AQUACULTURE BUILDING
LOGAN HATCHERY IMPROVEMENT PROJECT
HATCHERY BUILDING MODULE 1 AND 2
SECTIONS AND DETAILS 5

PROJECT NO: 14-23-0005
SHEET NO: M109
DATE: 10-2023
PAGE NO: 83

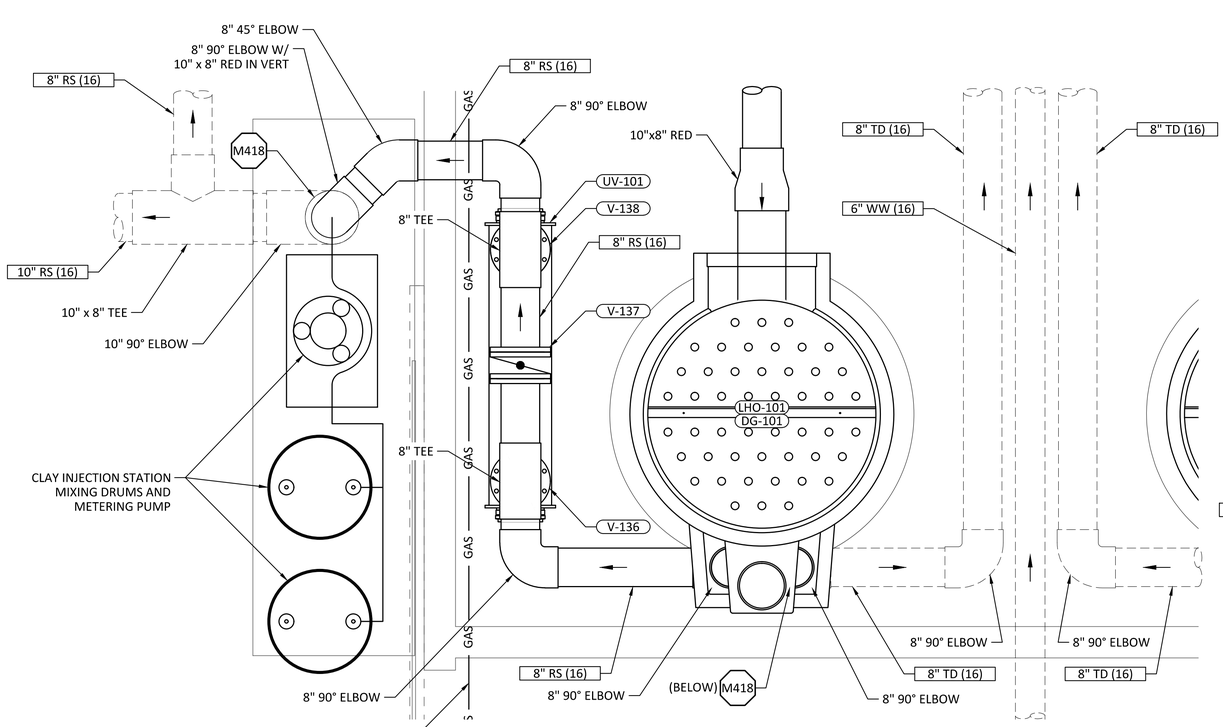

1 M101 MODULE 1 UV BYPASS ENLARGED DETAIL

SCALE: 3/4"= 1'-0"

0' 1' 2'

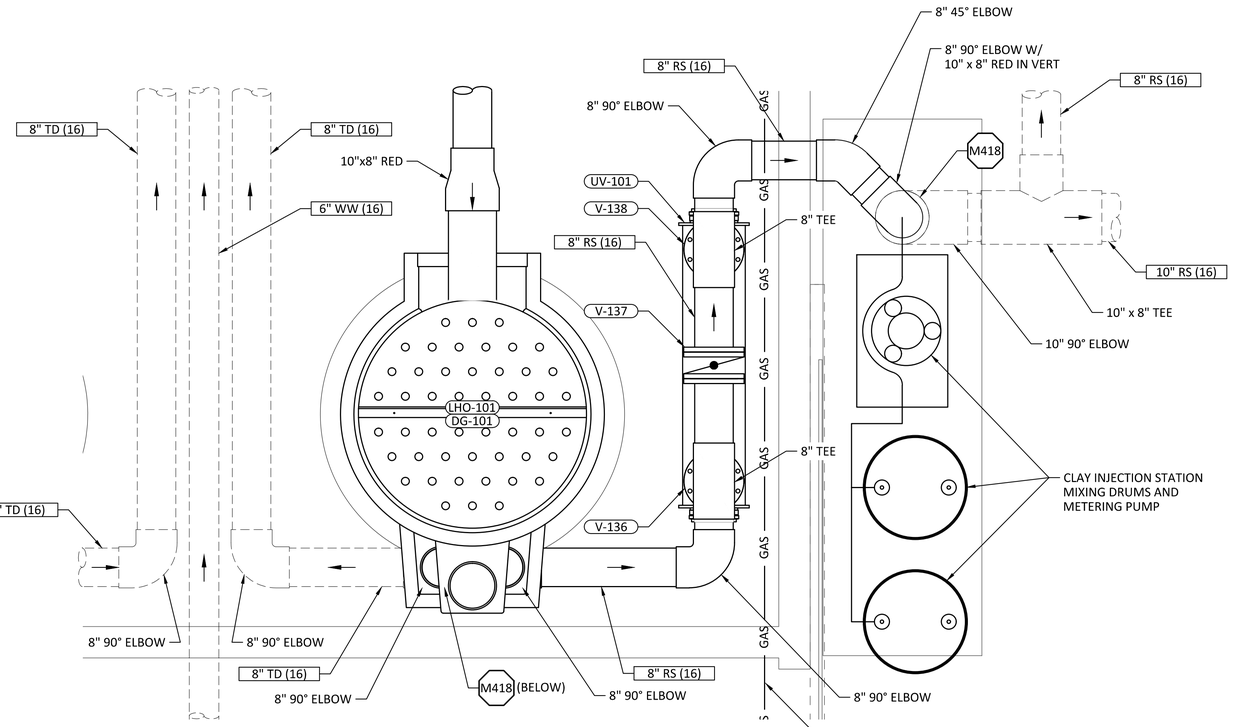

2 M103 MODULE 2 UV BYPASS ENLARGED DETAIL

SCALE: 3/4"= 1'-0"

0' 1' 2'

REVIEWED FOR CODE COMPLIANCE
Thomas W Peterson
12/14/2023
DIVISION OF FACILITIES CONSTRUCTION AND MANAGEMENT

DFCM CODE COMPLIANCE OFFICER

NO.	REVISIONS	BY	DATE
	PUBLISHED		
C	100% DESIGN REVIEW	JT	10/23
B	90% DESIGN REVIEW	JT	9/23
A	50% DESIGN REVIEW	JT	5/23

This document or any part thereof in detail or design concept is the property of Forsgren Associates Inc. and shall not be copied without the written authorization of Forsgren Associates Inc.

DRAWN DJ
DESIGNED MEC
APPROVED
QA MLL

ATTENTION
LINE IS 2-INCHES
AT 24"x36" SIZE
IF NOT 2-INCHES,
SCALE DRAWING ACCORDINGLY

PROFESSIONAL ENGINEER
No. 13614104-2202
BRENT WELTON
STATE OF UTAH
10/04/2023

FISHERIES EXPERIMENT STATION
UTAH DIVISION OF WILDLIFE RESOURCES
1465 WEST 200 NORTH
LOGAN, UTAH 84321

UTAH DNR WILDLIFE RESOURCES

McMillen

Blue Stakes of UTAH 811 Bluestakes.org

WARN WATER AQUACULTURE BUILDING
LOGAN HATCHERY IMPROVEMENT PROJECT
HATCHERY BUILDING RAS SUPPLY SYSTEM
SECTION AND DETAILS 6

PROJECT NO: 14-23-0005
SHEET NO: M110
DATE: 10-2023
PAGE NO: 84

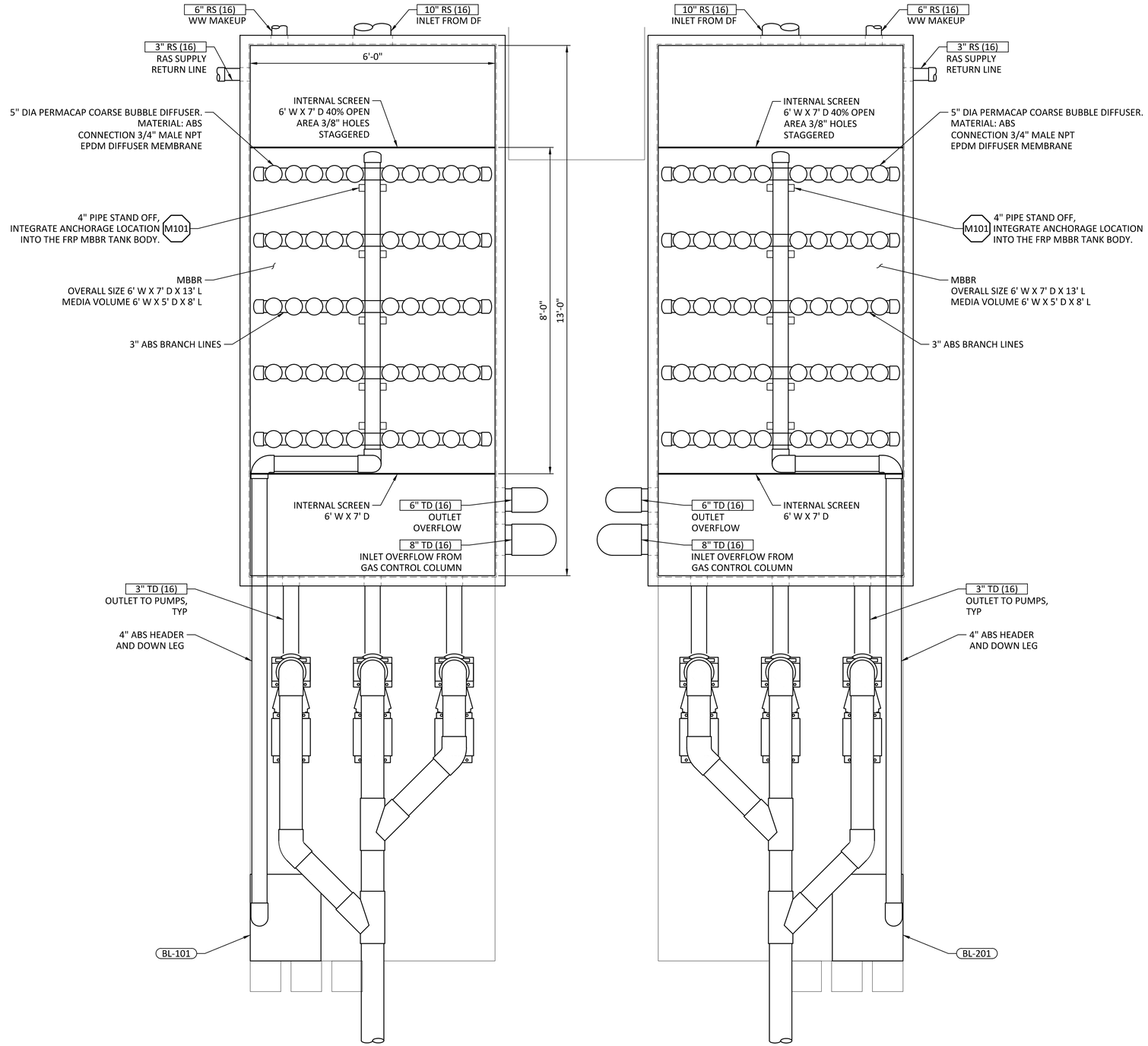

1 M101 MODULE 1 & 2 BIOREACTOR DETAILS

SCALE: 3/4"= 1'-0"

0' 1' 2'

SHEET NOTES:

1. COORDINATE THE DIMENSIONAL REQUIREMENTS OF THE BLOCK OUT IN THE CONCRETE WHICH WILL RELIEVE THE MBBR TANK. FOR EXAMPLE: IF USING A 4" FLANGE USE 6" BEYOND THE NOMINAL TANK SIZE, THIS WILL PROVIDE SOME CLEARANCE TO SET THE TANK IN PLACE.
2. USE A SELF LEVELING COMPOUND TO LEVEL THE SURFACE THE TANK WILL REST UPON.
3. USE WASHED PEA GRAVEL TO FILL IN THE GAPS BETWEEN THE SIDE WALLS AND THE CONCRETE.

REVIEWED FOR CODE COMPLIANCE
Thomas W Peterson
12/1/2023
DIVISION OF FACILITIES CONSTRUCTION AND MANAGEMENT

DFCM CODE COMPLIANCE OFFICER

NO.	REVISIONS	BY	DATE
	PUBLISHED		
C	100% DESIGN REVIEW	JT	10/23
B	90% DESIGN REVIEW	JT	9/23
A	50% DESIGN REVIEW	JT	5/23

This document or any part thereof in detail or design concept is the property of Forsgren Associates Inc. and shall not be copied without the written authorization of Forsgren Associates Inc.

DRAWN DJ
DESIGNED MEC
APPROVED
QA MLL

ATTENTION
LINE IS 2-INCHES
AT 24"x36" SIZE
IF NOT 2-INCHES, SCALE DRAWING ACCORDINGLY

PROFESSIONAL ENGINEER
No. 13614104-2202
BRENT WELTON
STATE OF UTAH
10/04/2023

FISHERIES EXPERIMENT STATION
UTAH DIVISION OF WILDLIFE RESOURCES
1465 WEST 200 NORTH
LOGAN, UTAH 84321

UTAH DNR WILDLIFE RESOURCES

McMillen

Blue Stakes of UTAH 811 Bluestakes.org

WARN WATER AQUACULTURE BUILDING
LOGAN HATCHERY IMPROVEMENT PROJECT

HATCHERY BUILDING MODULE 1 AND 2
SECTIONS AND DETAILS 7

PROJECT NO: 14-23-0005
SHEET NO: M111
DATE: 10-2023
PAGE NO: 85

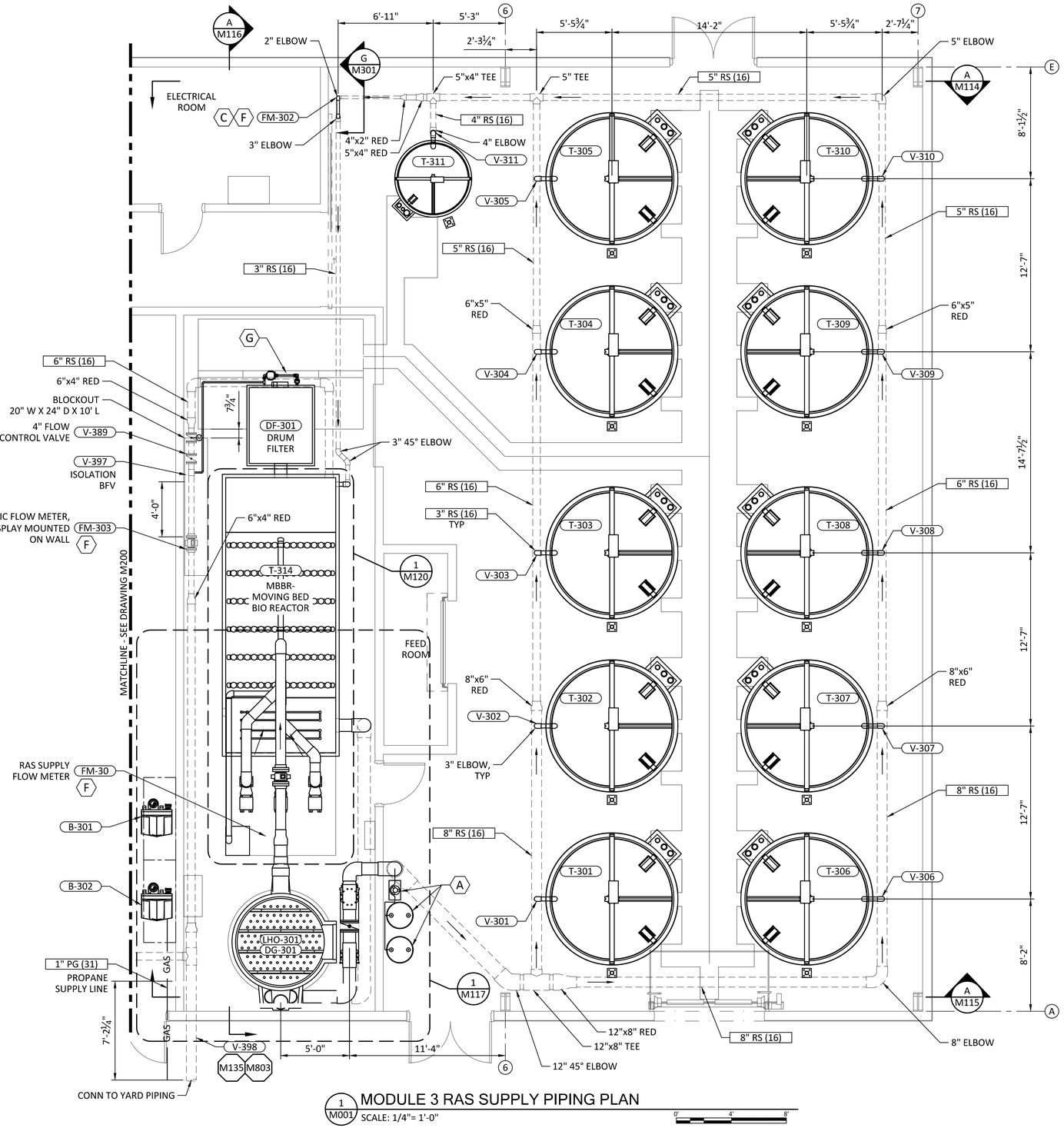

1 M001 MODULE 3 RAS SUPPLY PIPING PLAN

SCALE: 1/4"= 1'-0"

SHEET KEY NOTES:

A CLAY INJECTION STATION A, MIXING DRUM & METERING PUMP.

B MAKE-UP WATER.

C RAS SUPPLY LOOP RETURN LEG W/ FLOW METER. ROSEMOUNT 8705030 FLANGED MAGNETIC FLOW METER SENSOR, 3" (DN80).

D SUMP TO STORM DRAIN.

E SUMP TO EFFLUENT PONDS.

F FLOW METERS TO BE INSTALLED WITH A MINIMUM OF 10 PIPE DIAMETERS OF STRAIGHT PIPE UPSTREAM AND A MINIMUM OF 5 PIPE DIAMETER OF STRAIGHT PIPE DOWNSTREAM.

G BACK WASH PUMP FOR DRUM FILTER. PLUMB TO BOTH PROCESS WATER AND WW MAKEUP LINE.

REVIEWED FOR CODE COMPLIANCE
Thomas W Peterson
12/14/2023
DIVISION OF FACILITIES CONSTRUCTION AND MANAGEMENT

DFCM CODE COMPLIANCE OFFICER

NO.	REVISIONS	BY	DATE
	PUBLISHED		
C	100% DESIGN REVIEW	JT	10/23
B	90% DESIGN REVIEW	JT	9/23
A	50% DESIGN REVIEW	JT	5/23

This document or any part thereof in detail or design concept is the property of Forsgren Associates Inc. and shall not be copied without the written authorization of Forsgren Associates Inc.

DRAWN DJ
DESIGNED MEC
APPROVED
QA MLL

ATTENTION
LINE IS 2-INCHES AT 24"x36" SIZE
IF NOT 2-INCHES, SCALE DRAWING ACCORDINGLY

PROFESSIONAL ENGINEER — No. 13614104-2202 — BRENT WELTON — STATE OF UTAH — 10/04/2023

FISHERIES EXPERIMENT STATION
UTAH DIVISION OF WILDLIFE RESOURCES
1465 WEST 200 NORTH
LOGAN, UTAH 84321

UTAH DNR WILDLIFE RESOURCES

McMillen

Blue Stakes of UTAH 811 Bluestakes.org

WARN WATER AQUACULTURE BUILDING
LOGAN HATCHERY IMPROVEMENT PROJECT
HATCHERY BUILDING MODULE 3 RAS SUPPLY PIPING PLAN

PROJECT NO: 14-23-0005
SHEET NO: M112
DATE: 10-2023
PAGE NO: 86

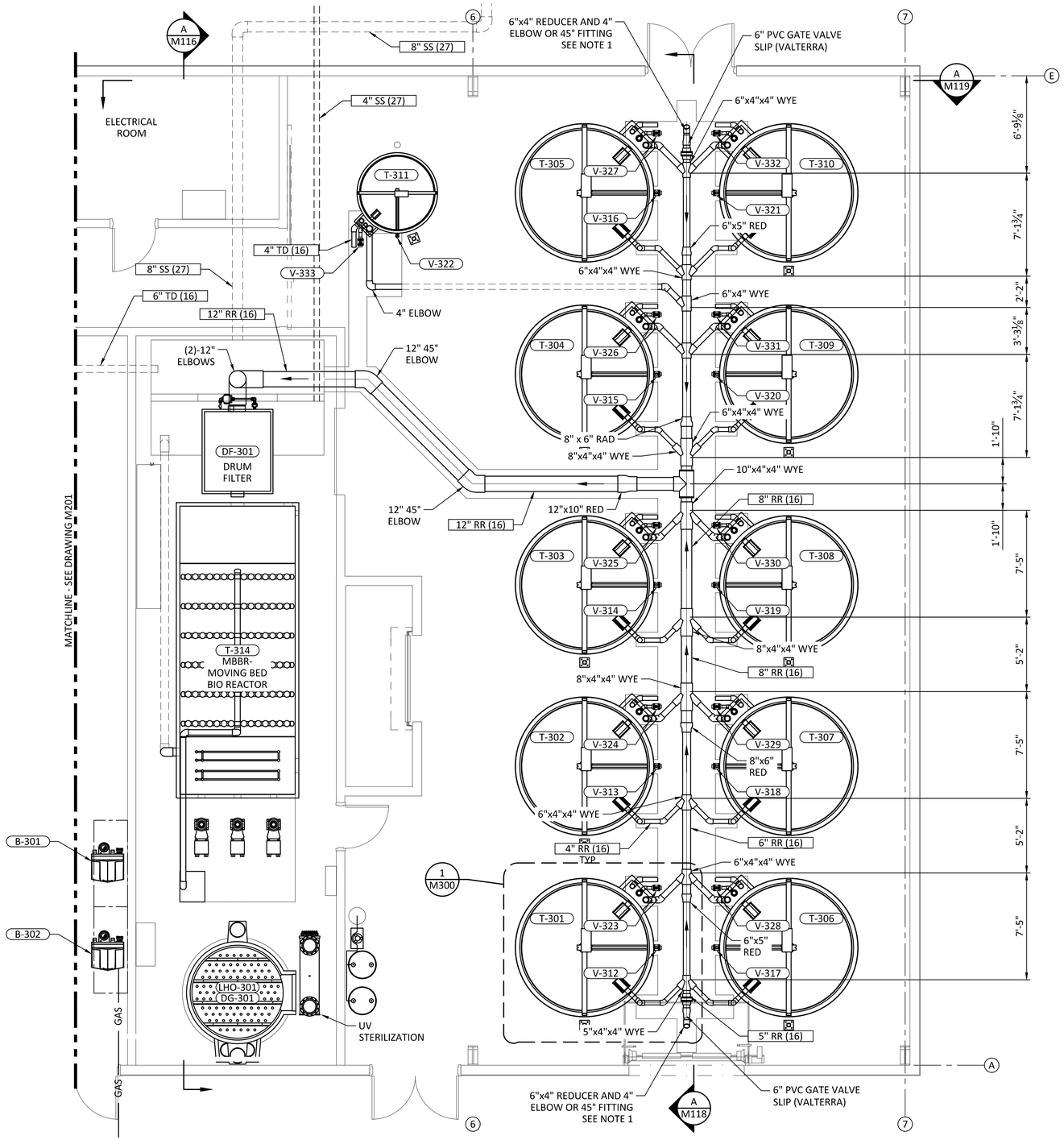

1 M001 MODULE 3 RAS RETURN PIPING PLAN

SCALE: 1/4"= 1'-0"

0' 4' 8'

REVIEWED FOR CODE COMPLIANCE
Thomas W Peterson
12/14/2023
DIVISION OF FACILITIES CONSTRUCTION AND MANAGEMENT

DFCM CODE COMPLIANCE OFFICER

NO.	REVISIONS	BY	DATE
	PUBLISHED		
C	100% DESIGN REVIEW	JT	10/23
B	90% DESIGN REVIEW	JT	9/23
A	50% DESIGN REVIEW	JT	5/23

This document or any part thereof in detail or design concept is the property of Forsgren Associates Inc. and shall not be copied without the written authorization of Forsgren Associates Inc.

DRAWN DJ
DESIGNED MEC
APPROVED
QA MLL

ATTENTION
LINE IS 2-INCHES AT 24"x36" SIZE
IF NOT 2-INCHES, SCALE DRAWING ACCORDINGLY

PROFESSIONAL ENGINEER No. 13614104-2202 BRENT WELTON STATE OF UTAH
10/04/2023

FISHERIES EXPERIMENT STATION
UTAH DIVISION OF WILDLIFE RESOURCES
1465 WEST 200 NORTH
LOGAN, UTAH 84321

UTAH DNR WILDLIFE RESOURCES

McMillen

Blue Stakes of UTAH 811 Bluestakes.org

WARN WATER AQUACULTURE BUILDING
LOGAN HATCHERY IMPROVEMENT PROJECT
HATCHERY BUILDING MODULE 3 RAS RETURN PIPING PLAN

PROJECT NO: 14-23-0005
SHEET NO: M113
DATE: 10-2023
PAGE NO: 87

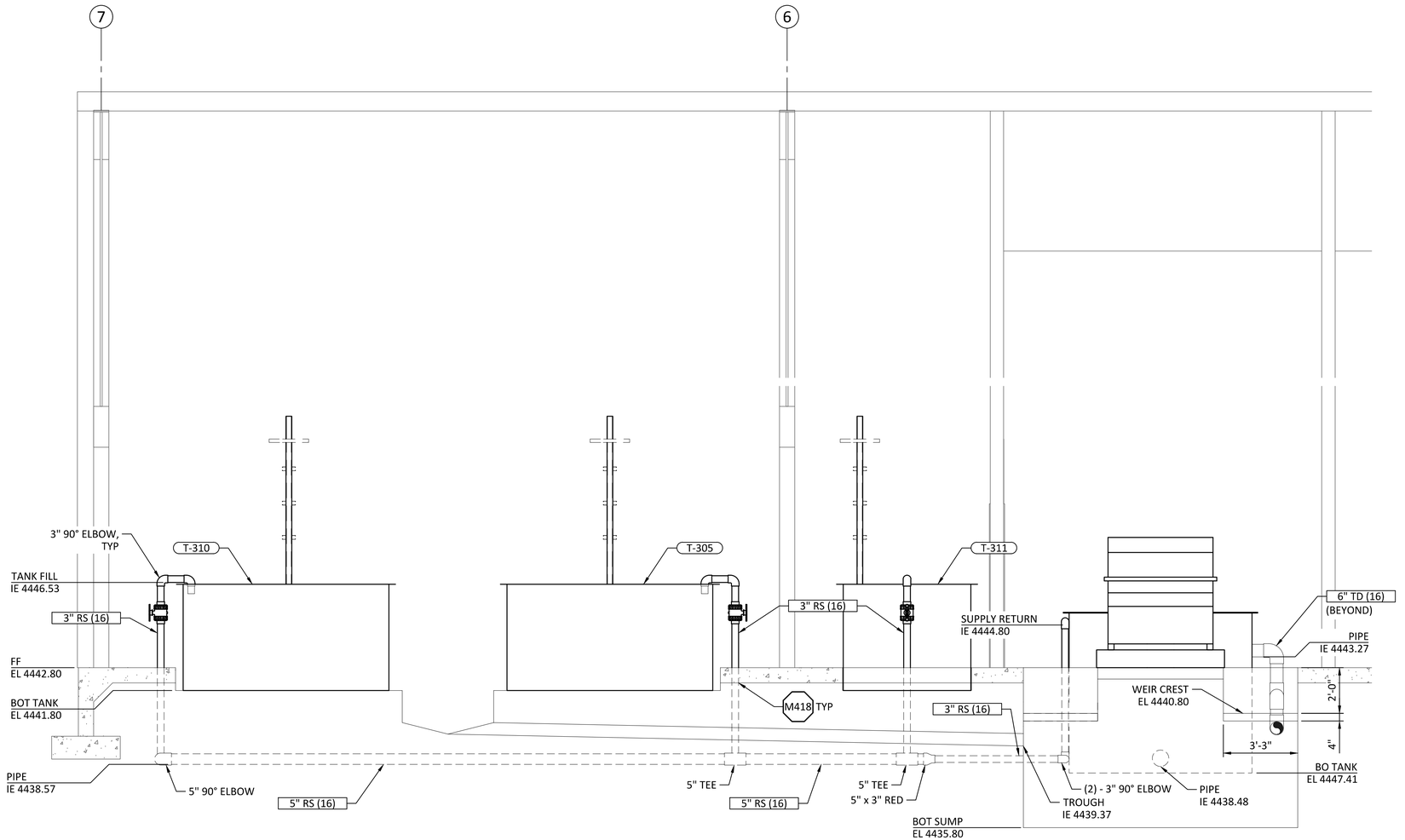

A / M112 MODULE 3 RAS SUPPLY SECTION

SCALE: 3/8"= 1'-0"

0' 2' 4'

REVIEWED FOR CODE COMPLIANCE
Thomas W Peterson
12/1/2023
DIVISION OF FACILITIES CONSTRUCTION AND MANAGEMENT

DFCM CODE COMPLIANCE OFFICER

NO.	REVISIONS	BY	DATE
	PUBLISHED		
C	100% DESIGN REVIEW	JT	10/23
B	90% DESIGN REVIEW	JT	9/23
A	50% DESIGN REVIEW	JT	5/23

This document or any part thereof in detail or design concept is the property of Forsgren Associates Inc. and shall not be copied without the written authorization of Forsgren Associates Inc.

DRAWN DJ
DESIGNED MEC
APPROVED
QA MLL

ATTENTION
LINE IS 2-INCHES
AT 24"x36" SIZE
IF NOT 2-INCHES, SCALE DRAWING ACCORDINGLY

PROFESSIONAL ENGINEER
No. 13614104-2202
BRENT WELTON
STATE OF UTAH
10/04/2023

FISHERIES EXPERIMENT STATION
UTAH DIVISION OF WILDLIFE RESOURCES
1465 WEST 200 NORTH
LOGAN, UTAH 84321

UTAH DNR WILDLIFE RESOURCES

McMillen

Blue Stakes of UTAH 811 Bluestakes.org

WARN WATER AQUACULTURE BUILDING
LOGAN HATCHERY IMPROVEMENT PROJECT

HATCHERY BUILDING MODULE 3
SECTIONS AND DETAIL 1

PROJECT NO: 14-23-0005
SHEET NO: M114
DATE: 10-2023
PAGE NO: 88

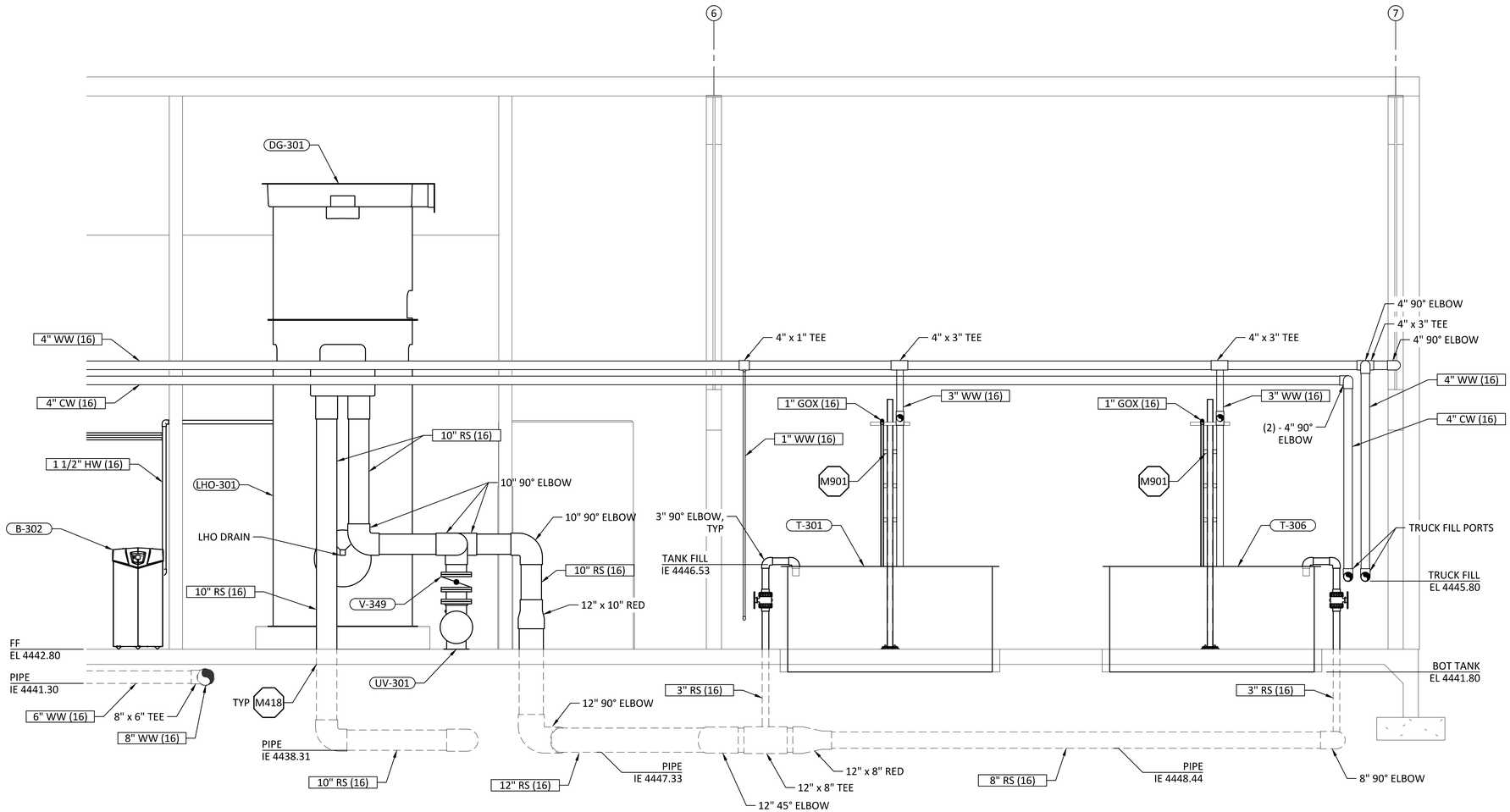

A M112 MODULE 3 RAS SUPPLY SECTION

SCALE: 3/8"= 1'-0"

0' 2' 4'

REVIEWED FOR CODE COMPLIANCE
Thomas W Peterson
12/14/2023
DIVISION OF FACILITIES CONSTRUCTION AND MANAGEMENT

DFCM CODE COMPLIANCE OFFICER

	PUBLISHED		
C	100% DESIGN REVIEW	JT	10/23
B	90% DESIGN REVIEW	JT	9/23
A	50% DESIGN REVIEW	JT	5/23
NO.	REVISIONS	BY	DATE

This document or any part thereof in detail or design concept is the property of Forsgren Associates Inc. and shall not be copied without the written authorization of Forsgren Associates Inc.

DRAWN DJ
DESIGNED MEC
APPROVED
QA MLL

ATTENTION
LINE IS 2-INCHES
AT 24"x36" SIZE
IF NOT 2-INCHES, SCALE DRAWING ACCORDINGLY

PROFESSIONAL ENGINEER No. 13614104-2202 BRENT WELTON STATE OF UTAH
10/04/2023

FISHERIES EXPERIMENT STATION
UTAH DIVISION OF WILDLIFE RESOURCES
1465 WEST 200 NORTH
LOGAN, UTAH 84321

UTAH DNR WILDLIFE RESOURCES

McMillen

Blue Stakes of UTAH 811 Bluestakes.org

WARN WATER AQUACULTURE BUILDING
LOGAN HATCHERY IMPROVEMENT PROJECT
HATCHERY BUILDING MODULE 3
SECTIONS AND DETAILS 2

PROJECT NO: 14-23-0005
SHEET NO: M115
DATE: 10-2023
PAGE NO: 89

SHEET NOTES:

1. AN UPWELLING CONNECTION TO THE GAS CONTROL COLUMN IS ALSO ACCEPTABLE.

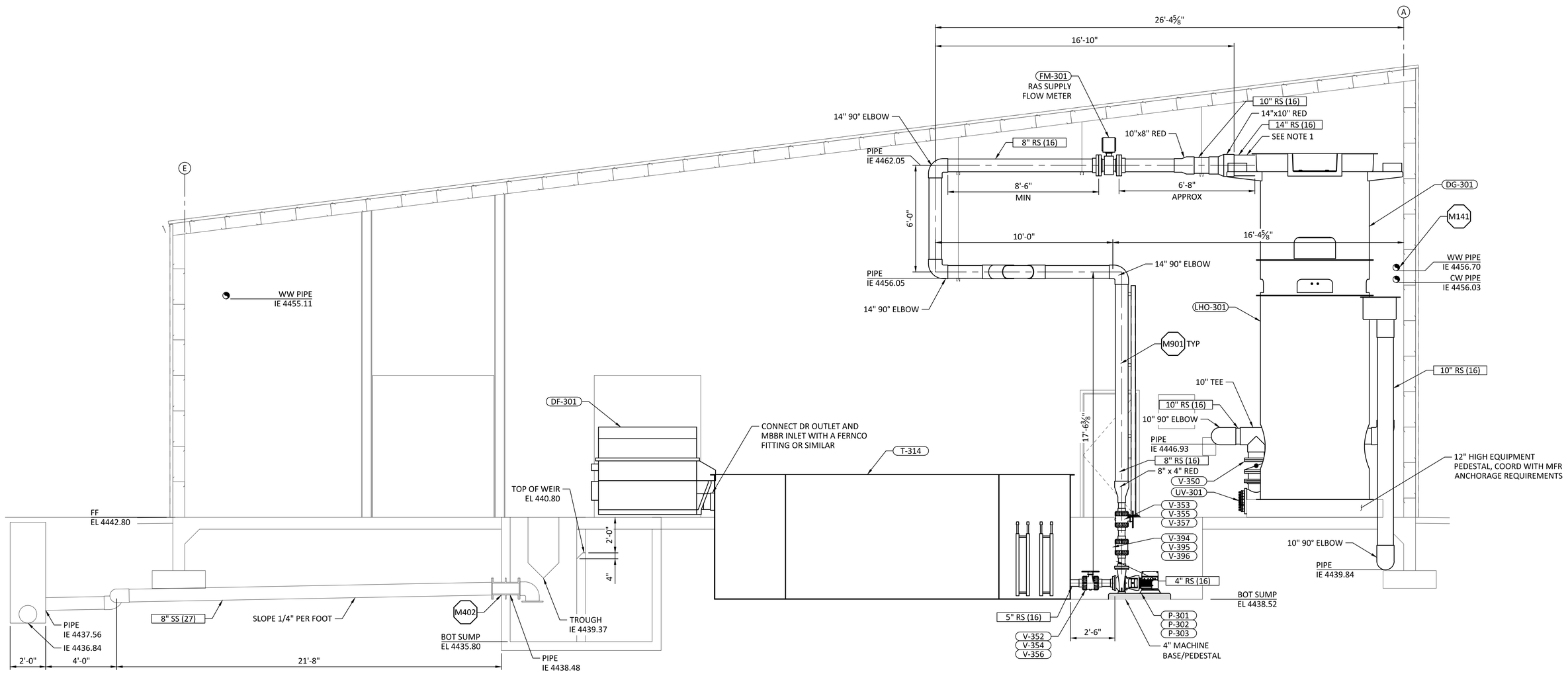

A / M112 MODULE 3 RAS SUPPLY SECTION

SCALE: 3/8"= 1'-0"

REVIEWED FOR CODE COMPLIANCE
Thomas W Peterson
12/14/2023
DIVISION OF FACILITIES CONSTRUCTION AND MANAGEMENT

DFCM CODE COMPLIANCE OFFICER

	PUBLISHED		
C	100% DESIGN REVIEW	JT	10/23
B	90% DESIGN REVIEW	JT	9/23
A	50% DESIGN REVIEW	JT	5/23
NO.	REVISIONS	BY	DATE

This document or any part thereof in detail or design concept is the property of Forsgren Associates Inc. and shall not be copied without the written authorization of Forsgren Associates Inc.

DRAWN DJ
DESIGNED MEC
APPROVED
QA MLL

ATTENTION
LINE IS 2-INCHES
AT 24"x36" SIZE
IF NOT 2-INCHES,
SCALE DRAWING ACCORDINGLY

PROFESSIONAL ENGINEER
No. 13614104-2202
BRENT WELTON
STATE OF UTAH
10/04/2023

FISHERIES EXPERIMENT STATION
UTAH DIVISION OF WILDLIFE RESOURCES
1465 WEST 200 NORTH
LOGAN, UTAH 84321

UTAH DNR WILDLIFE RESOURCES

McMillen

Blue Stakes of UTAH 811 Bluestakes.org

WARN WATER AQUACULTURE BUILDING
LOGAN HATCHERY IMPROVEMENT PROJECT
HATCHERY BUILDING MODULE 3
SECTIONS AND DETAIL 3

PROJECT NO: 14-23-0005
SHEET NO: M116
DATE: 10-2023
PAGE NO: 90

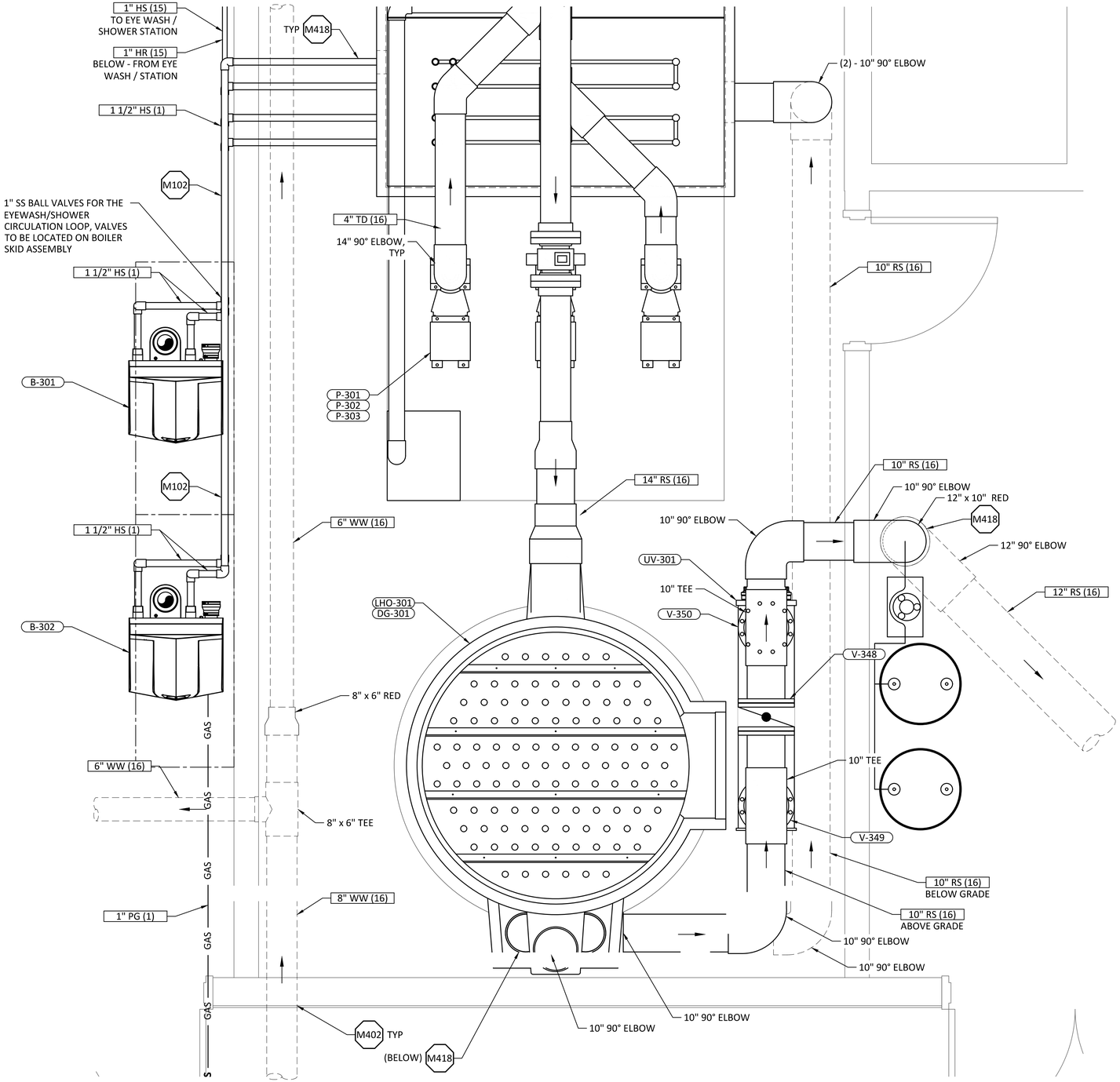

1/M112 MODULE 3 UV BYPASS ENLARGED DETAIL
SCALE: 3/4"= 1'-0"

REVIEWED FOR CODE COMPLIANCE
Thomas W Peterson
12/14/2023
DIVISION OF FACILITIES CONSTRUCTION AND MANAGEMENT
DFCM CODE COMPLIANCE OFFICER

NO.	REVISIONS	BY	DATE
C	100% DESIGN REVIEW	JT	10/23
B	90% DESIGN REVIEW	JT	9/23
A	50% DESIGN REVIEW	JT	5/23

This document or any part thereof in detail or design concept is the property of Forsgren Associates Inc. and shall not be copied without the written authorization of Forsgren Associates Inc.

DRAWN DJ
DESIGNED MEC
APPROVED
QA MLL

ATTENTION
LINE IS 2-INCHES
AT 24"x36" SIZE
IF NOT 2-INCHES, SCALE DRAWING ACCORDINGLY

PROFESSIONAL ENGINEER
No. 13614104-2202
BRENT WELTON
STATE OF UTAH
10/04/2023

FISHERIES EXPERIMENT STATION
UTAH DIVISION OF WILDLIFE RESOURCES
1465 WEST 200 NORTH
LOGAN, UTAH 84321

UTAH DNR WILDLIFE RESOURCES

McMillen

Blue Stakes of UTAH 811 Bluestakes.org

WARN WATER AQUACULTURE BUILDING
LOGAN HATCHERY IMPROVEMENT PROJECT

HATCHERY BUILDING MODULE 3
SECTIONS AND DETAIL 4

PROJECT NO: 14-23-0005
SHEET NO: M117
DATE: 10-2023
PAGE NO: 91

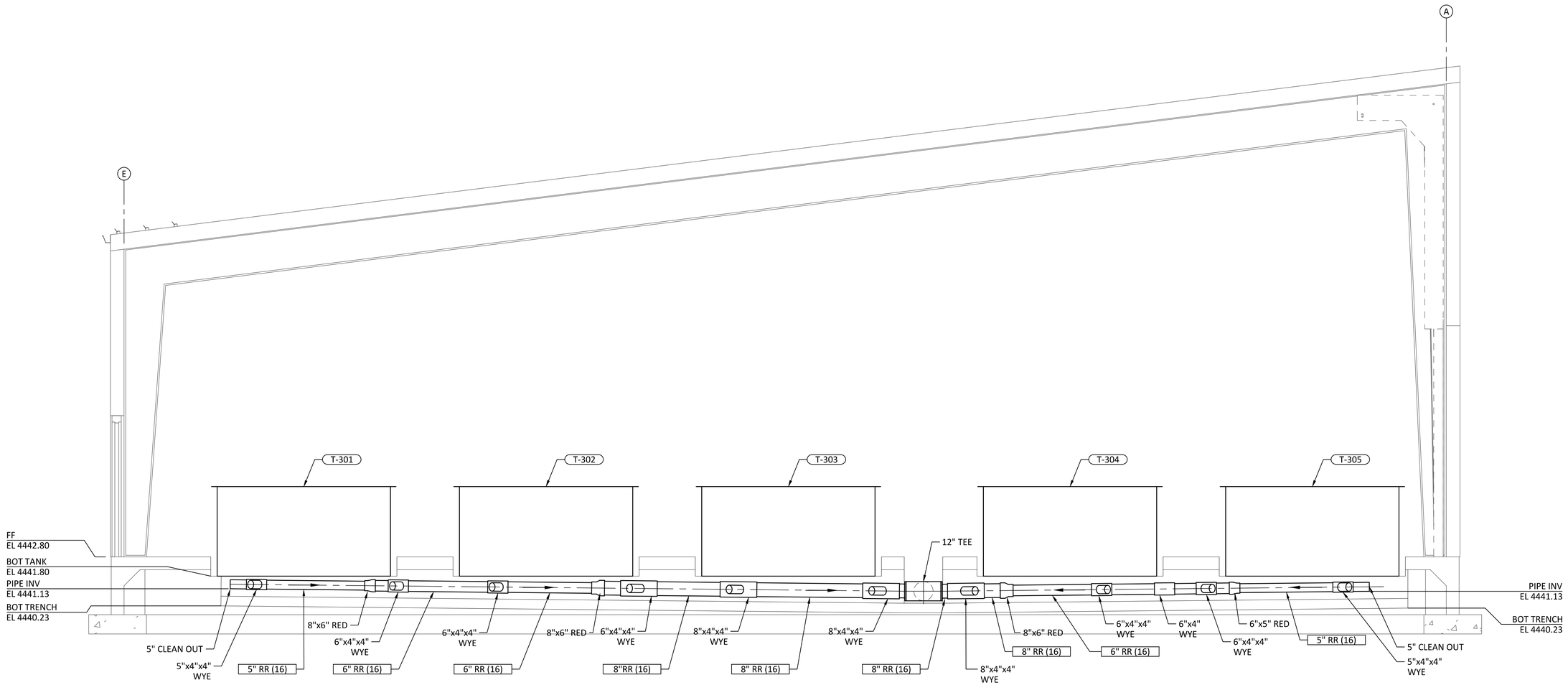

A M113 MODULE 3 RAS RETURN SECTION

SCALE: 3/8"= 1'-0"

0' 2' 4'

REVIEWED FOR CODE COMPLIANCE
Thomas W Peterson
12/14/2023
DIVISION OF FACILITIES CONSTRUCTION AND MANAGEMENT

DFCM CODE COMPLIANCE OFFICER

NO.	REVISIONS	BY	DATE
C	100% DESIGN REVIEW	JT	10/23
B	90% DESIGN REVIEW	JT	9/23
A	50% DESIGN REVIEW	JT	5/23
	PUBLISHED		

This document or any part thereof in detail or design concept is the property of Forsgren Associates Inc. and shall not be copied without the written authorization of Forsgren Associates Inc.

DRAWN DJ
DESIGNED MEC
APPROVED
QA MLL

ATTENTION
LINE IS 2-INCHES
AT 24"x36" SIZE
IF NOT 2-INCHES, SCALE DRAWING ACCORDINGLY

PROFESSIONAL ENGINEER
No. 13614104-2202
BRENT WELTON
STATE OF UTAH
10/04/2023

FISHERIES EXPERIMENT STATION
UTAH DIVISION OF WILDLIFE RESOURCES
1465 WEST 200 NORTH
LOGAN, UTAH 84321

UTAH DNR WILDLIFE RESOURCES

McMillen

Blue Stakes of UTAH 811 Bluestakes.org

WARN WATER AQUACULTURE BUILDING
LOGAN HATCHERY IMPROVEMENT PROJECT

HATCHERY BUILDING MODULE 3
SECTIONS AND DETAILS 5

PROJECT NO: 14-23-0005
SHEET NO: M118
DATE: 10-2023
PAGE NO: 92

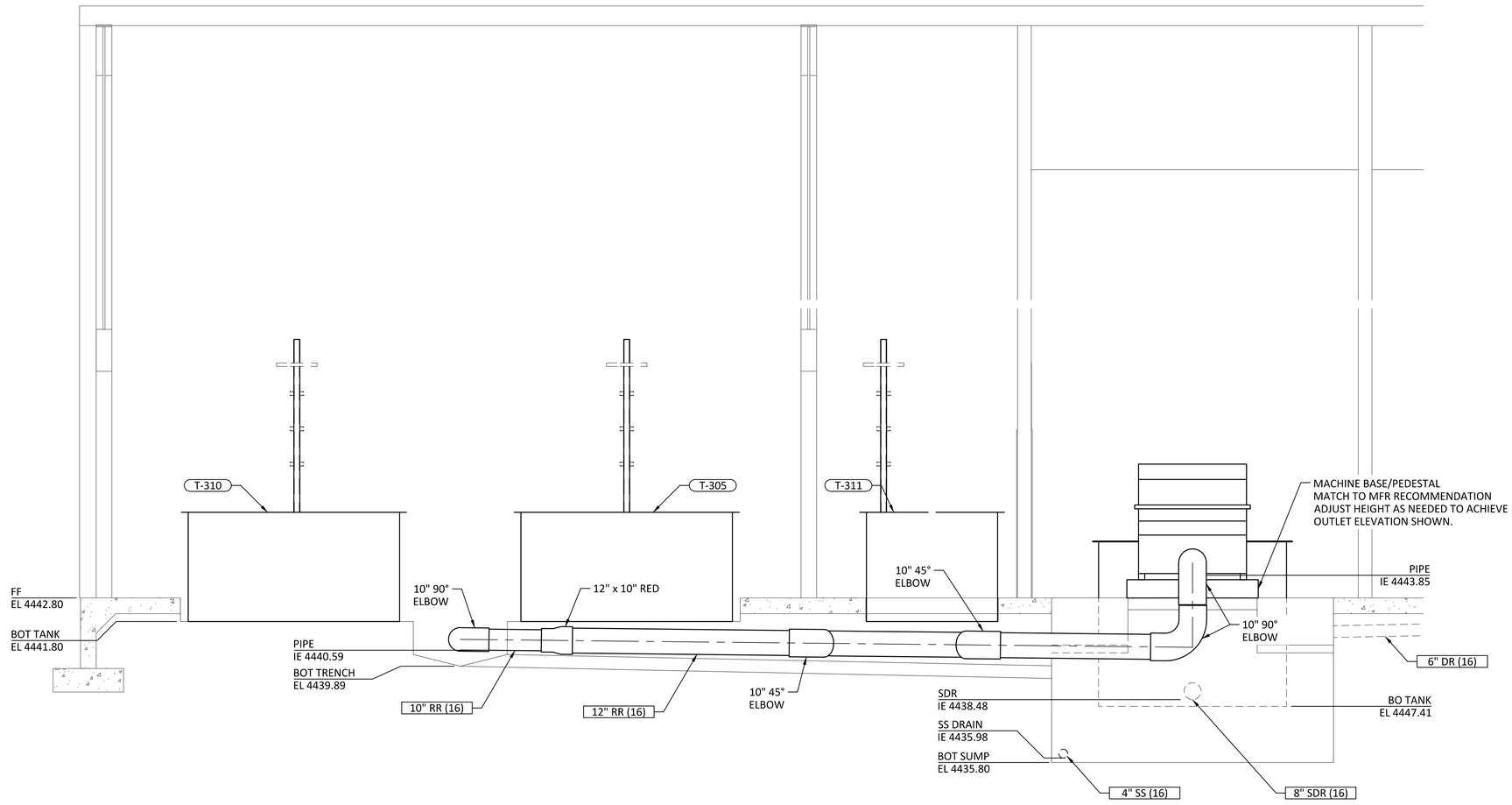

A / M113 MODULE 3 RAS RETURN SECTION

SCALE: 3/8"= 1'-0"

0' 2' 4'

REVIEWED FOR CODE COMPLIANCE
Thomas W Peterson
12/14/2023
DIVISION OF FACILITIES CONSTRUCTION AND MANAGEMENT

DFCM CODE COMPLIANCE OFFICER

PUBLISHED			
C	100% DESIGN REVIEW	JT	10/23
B	90% DESIGN REVIEW	JT	9/23
A	50% DESIGN REVIEW	JT	5/23
NO.	REVISIONS	BY	DATE

This document or any part thereof in detail or design concept is the property of Forsgren Associates Inc. and shall not be copied without the written authorization of Forsgren Associates Inc.

DRAWN DJ
DESIGNED MEC
APPROVED
QA MLL

ATTENTION
LINE IS 2-INCHES
AT 24"x36" SIZE
IF NOT 2-INCHES,
SCALE DRAWING ACCORDINGLY

PROFESSIONAL ENGINEER
No. 13614104-2202
BRENT WELTON
STATE OF UTAH
10/04/2023

FISHERIES EXPERIMENT STATION
UTAH DIVISION OF WILDLIFE RESOURCES
1465 WEST 200 NORTH
LOGAN, UTAH 84321

UTAH DNR WILDLIFE RESOURCES

McMillen

Blue Stakes of UTAH 811 Bluestakes.org

WARN WATER AQUACULTURE BUILDING
LOGAN HATCHERY IMPROVEMENT PROJECT

HATCHERY BUILDING MODULE 3
SECTIONS AND DETAIL 6

PROJECT NO: 14-23-0005
SHEET NO: M119
DATE: 10-2023
PAGE NO: 93

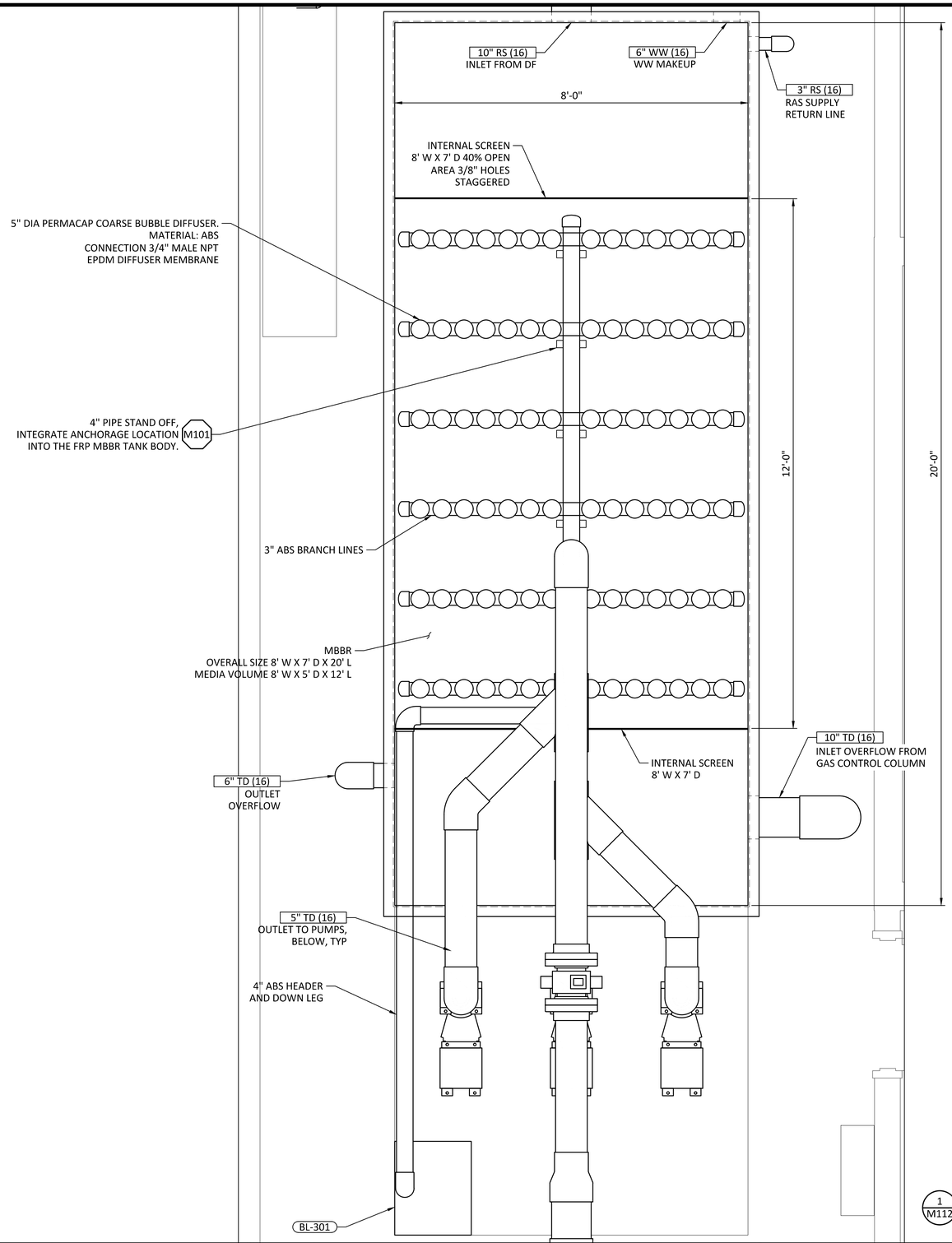

1 M112 MODULE 3 BIOREACTOR DETAILS

SCALE: 3/4"= 1'-0"

0' 1' 2'

SHEET NOTES:

1. COORDINATE THE DIMENSIONAL REQUIREMENTS OF THE BLOCK OUT IN THE CONCRETE WHICH WILL RELIEVE THE MBBR TANK. FOR EXAMPLE: IF USING A 4" FLANGE USE 6" BEYOND THE NOMINAL TANK SIZE, THIS WILL PROVIDE SOME CLEARANCE TO SET THE TANK IN PLACE.
2. USE A SELF LEVELING COMPOUND TO LEVEL THE SURFACE THE TANK WILL REST UPON.
3. USE WASHED PEA GRAVEL TO FILL IN THE GAPS BETWEEN THE SIDE WALLS AND THE CONCRETE.

REVIEWED FOR CODE COMPLIANCE
Thomas W Peterson
12/14/2023
DIVISION OF FACILITIES CONSTRUCTION AND MANAGEMENT

DFCM CODE COMPLIANCE OFFICER

NO.	REVISIONS	BY	DATE
	PUBLISHED		
C	100% DESIGN REVIEW	JT	10/23
B	90% DESIGN REVIEW	JT	9/23
A	50% DESIGN REVIEW	JT	5/23

This document or any part thereof in detail or design concept is the property of Forsgren Associates Inc. and shall not be copied without the written authorization of Forsgren Associates Inc.

DRAWN DJ
DESIGNED MEC
APPROVED
QA MLL

ATTENTION
LINE IS 2-INCHES
AT 24"x36" SIZE
IF NOT 2-INCHES,
SCALE DRAWING ACCORDINGLY

PROFESSIONAL ENGINEER
No. 13614104-2202
BRENT WELTON
STATE OF UTAH
10/04/2023

FISHERIES EXPERIMENT STATION
UTAH DIVISION OF WILDLIFE RESOURCES
1465 WEST 200 NORTH
LOGAN, UTAH 84321

UTAH DNR WILDLIFE RESOURCES

McMillen

Blue Stakes of UTAH 811 Bluestakes.org

WARN WATER AQUACULTURE BUILDING
LOGAN HATCHERY IMPROVEMENT PROJECT

HATCHERY BUILDING MODULE 3
SECTIONS AND DETAILS 7

PROJECT NO: 14-23-0005
SHEET NO: M120
DATE: 10-2023
PAGE NO: 94

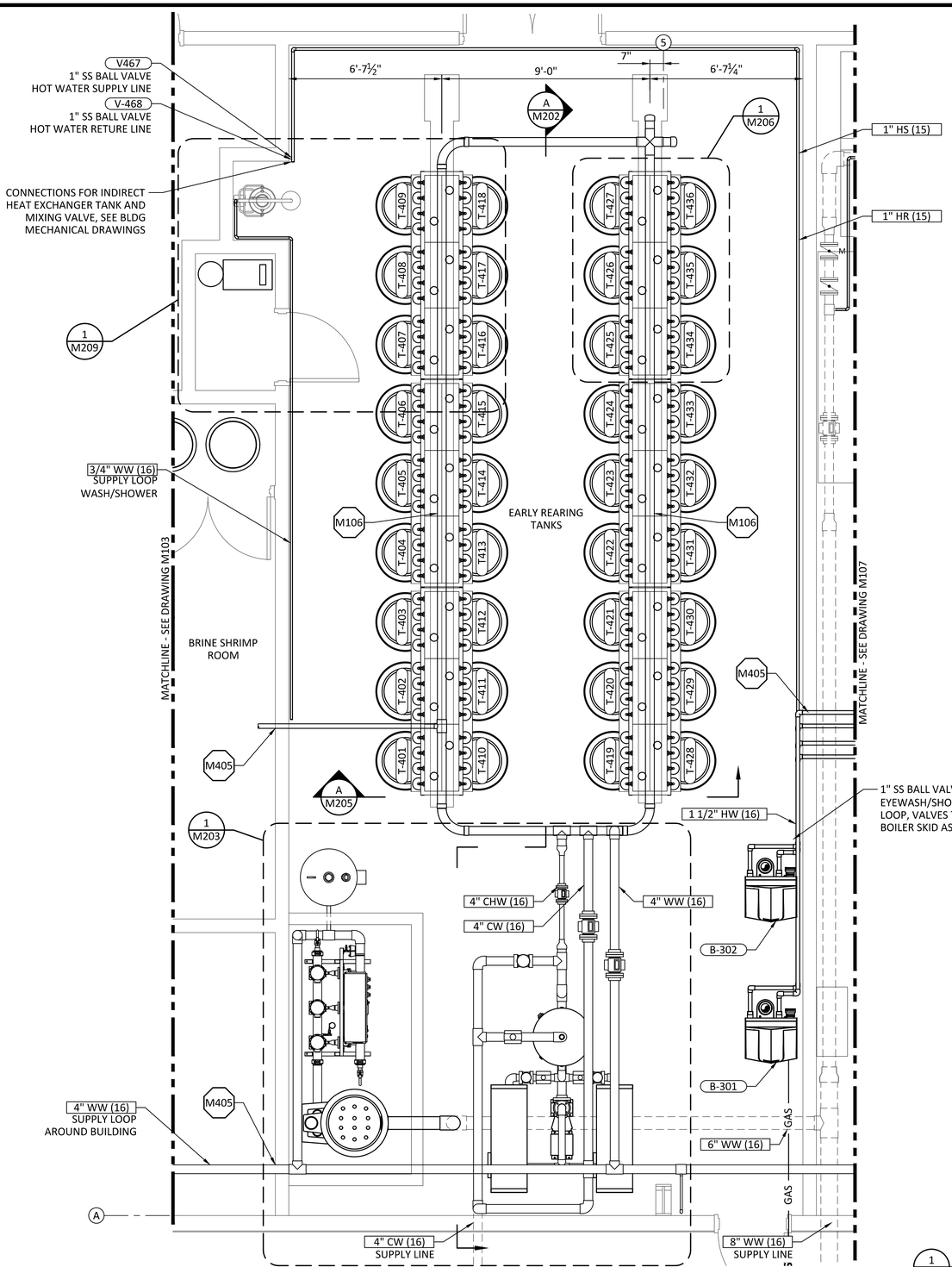

SHEET KEY NOTES:

A INCUBATION JARS, 144 IN TOTAL.

B CHILLED WATER, COOL WATER, AND WARM WATER TAPS FEED EACH HEAD TANK. EACH HEAD TANK COMPARTMENT FEEDS 4 INCUBATION JARS. EACH SET OF 4 INCUBATION JARS FEED INTO (1) - 2'-0" DIA x 2'-0" DEEP TANK.

1 M001 INCUBATION SUPPLY PIPING PLAN
SCALE: 3/8"= 1'-0"
0' 2' 4'

REVIEWED FOR CODE COMPLIANCE
Thomas W Peterson
12/14/2023
DIVISION OF FACILITIES CONSTRUCTION AND MANAGEMENT
DFCM CODE COMPLIANCE OFFICER

	PUBLISHED		
C	100% DESIGN REVIEW	JT	10/23
B	90% DESIGN REVIEW	JT	9/23
A	50% DESIGN REVIEW	JT	5/23
NO.	REVISIONS	BY	DATE

This document or any part thereof in detail or design concept is the property of Forsgren Associates Inc. and shall not be copied without the written authorization of Forsgren Associates Inc.

DRAWN DJ
DESIGNED MEC
APPROVED
QA MLL

ATTENTION
LINE IS 2-INCHES
AT 24"x36" SIZE
IF NOT 2-INCHES, SCALE DRAWING ACCORDINGLY

PROFESSIONAL ENGINEER
No. 13614104-2202
BRENT WELTON
STATE OF UTAH
10/04/2023

FISHERIES EXPERIMENT STATION
UTAH DIVISION OF WILDLIFE RESOURCES
1465 WEST 200 NORTH
LOGAN, UTAH 84321

UTAH DNR WILDLIFE RESOURCES

McMillen

Blue Stakes of UTAH 811 Bluestakes.org

WARN WATER AQUACULTURE BUILDING
LOGAN HATCHERY IMPROVEMENT PROJECT
HATCHERY BUILDING INCUBATION SUPPLY PIPING PLAN

PROJECT NO: 14-23-0005
SHEET NO: M200
DATE: 10-2023
PAGE NO: 95

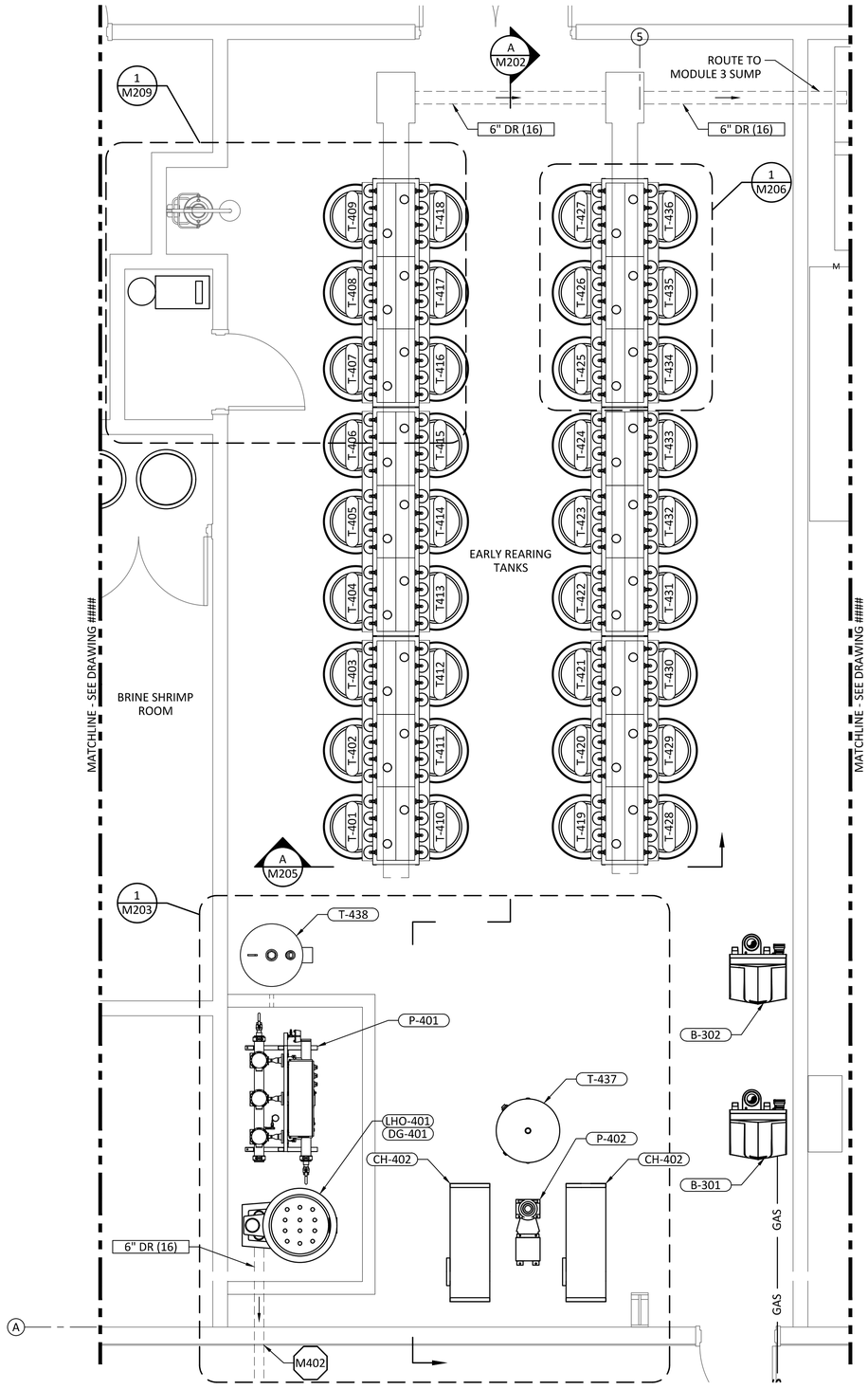

1 M001 INCUBATION DRAIN PIPING PLAN

SCALE: 3/8"= 1'-0"

0" 2" 4"

SHEET KEY NOTES:

1. THE INCUBATION SYSTEM IS A SINGLE PASS SYSTEM. THE TANKS DRAIN DIRECTLY INTO THE FLOOR TROUGH/DRAIN. THE FLOOR TROUGHS DRAIN COMBINE WITH THE FLOOR DRAINS FROM MODULE 3. THE COMBINED FLOW THEN GOES TO THE STORM DRAIN LOCATED ON THE EAST SIDE OF THE BUILDING.

REVIEWED FOR CODE COMPLIANCE
Thomas W Peterson
12/14/2023
DIVISION OF FACILITIES CONSTRUCTION AND MANAGEMENT

DFCM CODE COMPLIANCE OFFICER

NO.	PUBLISHED / REVISIONS	BY	DATE
C	100% DESIGN REVIEW	JT	10/23
B	90% DESIGN REVIEW	JT	9/23
A	50% DESIGN REVIEW	JT	5/23

This document or any part thereof in detail or design concept is the property of Forsgren Associates Inc. and shall not be copied without the written authorization of Forsgren Associates Inc.

DRAWN DJ
DESIGNED MEC
APPROVED
QA MLL

ATTENTION
LINE IS 2-INCHES
AT 24"x36" SIZE
IF NOT 2-INCHES, SCALE DRAWING ACCORDINGLY

PROFESSIONAL ENGINEER
No. 13614104-2202
BRENT WELTON
STATE OF UTAH
10/04/2023

FISHERIES EXPERIMENT STATION
UTAH DIVISION OF WILDLIFE RESOURCES
1465 WEST 200 NORTH
LOGAN, UTAH 84321

UTAH DNR WILDLIFE RESOURCES

McMillen

Blue Stakes of UTAH 811 bluestakes.org

WARN WATER AQUACULTURE BUILDING
LOGAN HATCHERY IMPROVEMENT PROJECT

HATCHERY BUILDING INCUBATION
DRAIN PIPING PLAN

PROJECT NO: 14-23-0005
SHEET NO: M201
DATE: 10-2023
PAGE NO: 96

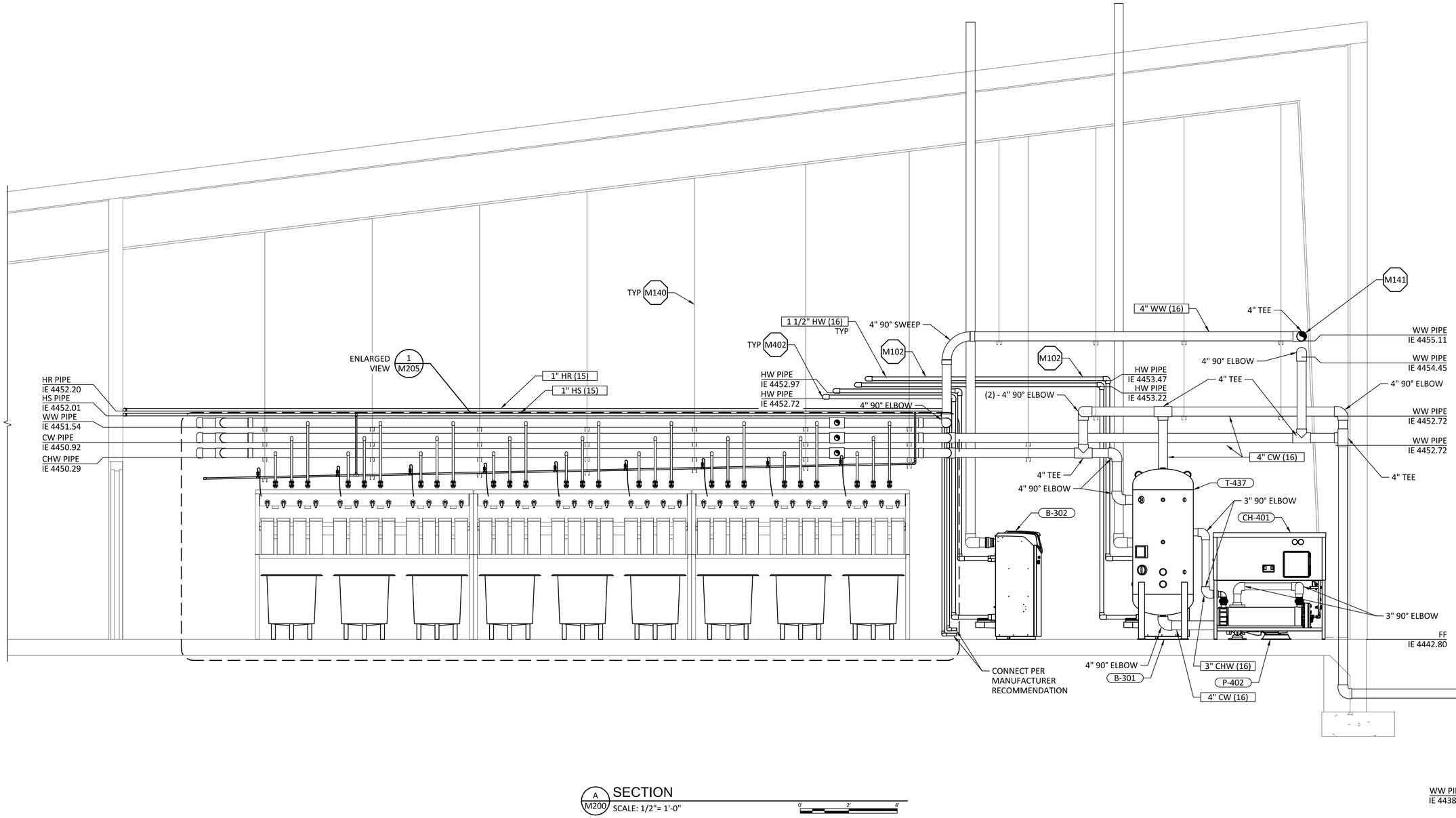

A M200 SECTION
SCALE: 1/2"= 1'-0"
0' 2' 4'

REVIEWED FOR CODE COMPLIANCE
Thomas W Peterson
12/14/2023
DIVISION OF FACILITIES CONSTRUCTION AND MANAGEMENT
DFCM CODE COMPLIANCE OFFICER

NO.	REVISIONS	BY	DATE
C	100% DESIGN REVIEW	JT	10/23
B	90% DESIGN REVIEW	JT	9/23
A	50% DESIGN REVIEW	JT	5/23

PUBLISHED

This document or any part thereof in detail or design concept is the property of Forsgren Associates Inc. and shall not be copied without the written authorization of Forsgren Associates Inc.

DRAWN DJ
DESIGNED MEC
APPROVED
QA MLL

ATTENTION
LINE IS 2-INCHES
AT 24"x36" SIZE
IF NOT 2-INCHES, SCALE DRAWING ACCORDINGLY

PROFESSIONAL ENGINEER No. 13614104-2202 BRENT WELTON STATE OF UTAH
10/04/2023

FISHERIES EXPERIMENT STATION
UTAH DIVISION OF WILDLIFE RESOURCES
1465 WEST 200 NORTH
LOGAN, UTAH 84321

UTAH DNR WILDLIFE RESOURCES

McMillen

Blue Stakes of UTAH 811 bluestakes.org

WARN WATER AQUACULTURE BUILDING
LOGAN HATCHERY IMPROVEMENT PROJECT

HATCHERY BUILDING INCUBATION
SECTIONS AND DETAILS 1

PROJECT NO: 14-23-0005
SHEET NO: M202
DATE: 10-2023
PAGE NO: 97

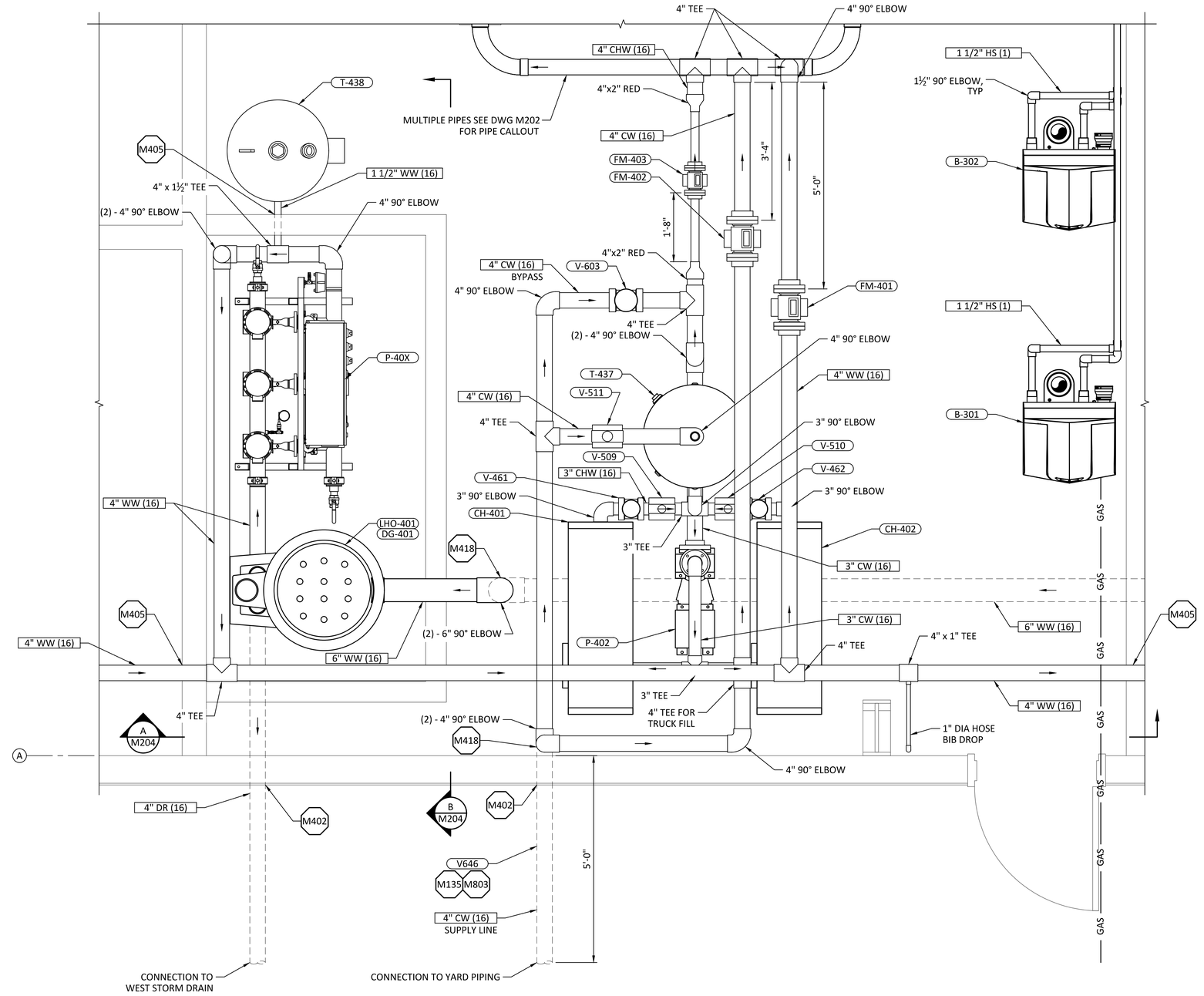

1 M200 INCUBATION ENLARGED PIPING PLAN

SCALE: 3/4"= 1'-0"

0' 1' 2'

REVIEWED FOR CODE COMPLIANCE
Thomas W Peterson
12/14/2023
DIVISION OF FACILITIES CONSTRUCTION AND MANAGEMENT

DFCM CODE COMPLIANCE OFFICER

NO.	REVISIONS	BY	DATE
C	100% DESIGN REVIEW	JT	10/23
B	90% DESIGN REVIEW	JT	9/23
A	50% DESIGN REVIEW	JT	5/23

PUBLISHED

This document or any part thereof in detail or design concept is the property of Forsgren Associates Inc. and shall not be copied without the written authorization of Forsgren Associates Inc.

DRAWN DJ
DESIGNED MEC
APPROVED
QA MLL

ATTENTION
LINE IS 2-INCHES
AT 24"x36" SIZE
IF NOT 2-INCHES, SCALE DRAWING ACCORDINGLY

PROFESSIONAL ENGINEER
No. 13614104-2202
BRENT WELTON
STATE OF UTAH
10/04/2023

FISHERIES EXPERIMENT STATION
UTAH DIVISION OF WILDLIFE RESOURCES
1465 WEST 200 NORTH
LOGAN, UTAH 84321

UTAH DNR WILDLIFE RESOURCES

McMillen

Blue Stakes of UTAH 811 bluestakes.org

WARN WATER AQUACULTURE BUILDING
LOGAN HATCHERY IMPROVEMENT PROJECT
HATCHERY BUILDING INCUBATION ENLARGED PLAN

PROJECT NO: 14-23-0005
SHEET NO: M203
DATE: 10-2023
PAGE NO: 98

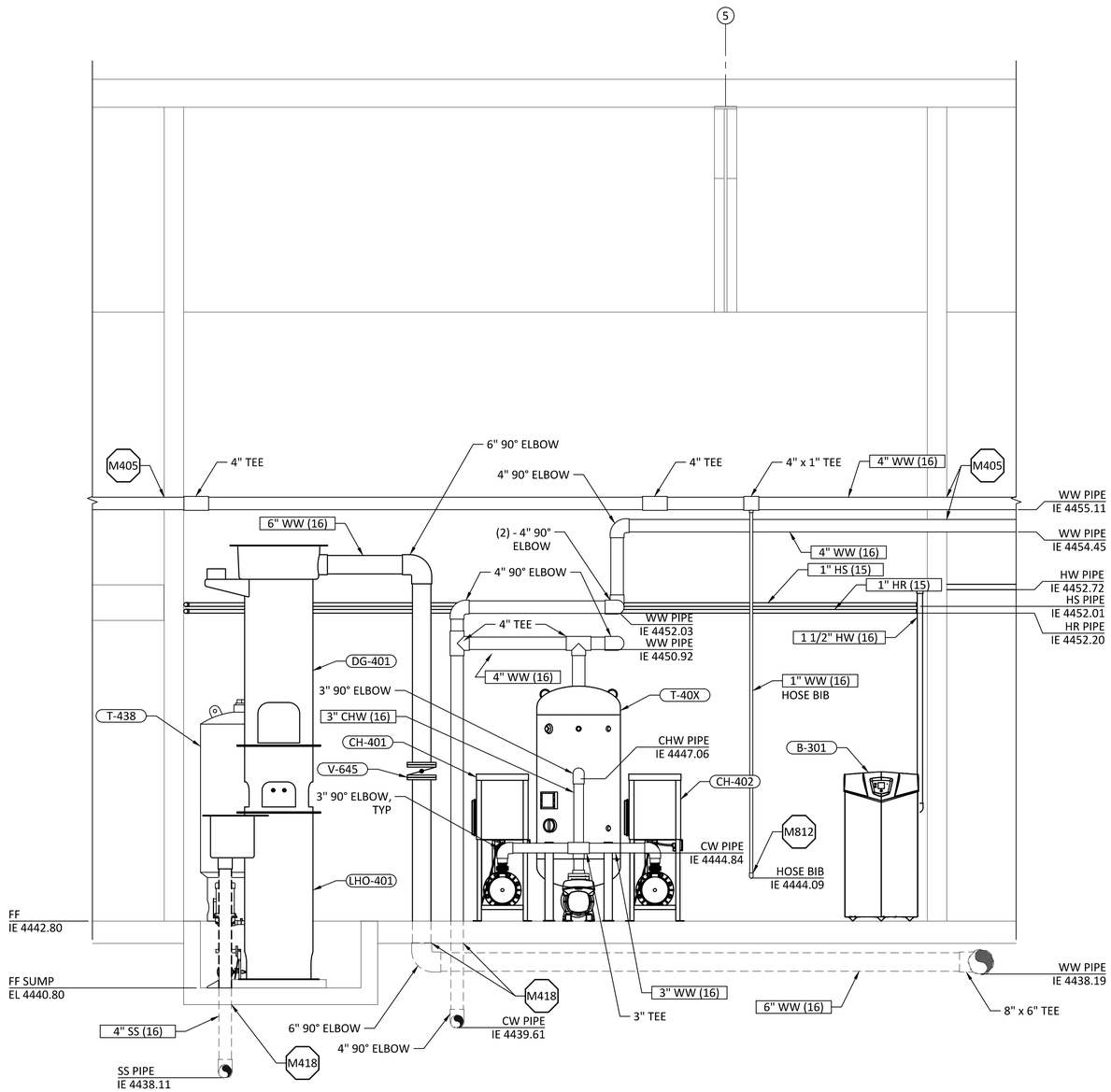

A M203 SECTION
SCALE: 1/2"= 1'-0"
0' 2' 4'

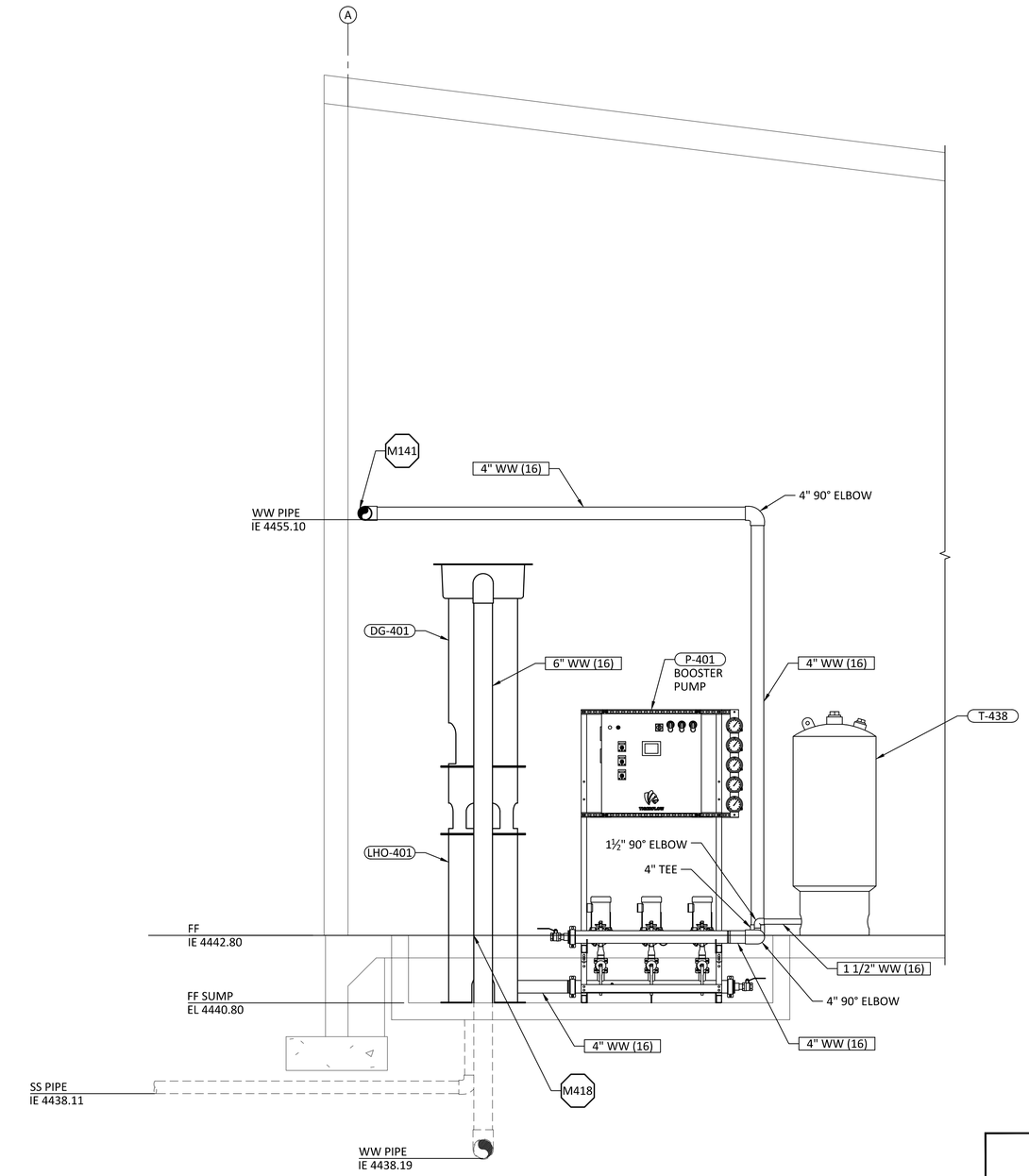

B M203 SECTION
SCALE: 1/2"= 1'-0"
0' 2' 4'

REVIEWED FOR CODE COMPLIANCE
Thomas W Peterson
12/14/2023
DIVISION OF FACILITIES CONSTRUCTION AND MANAGEMENT

DFCM CODE COMPLIANCE OFFICER

NO.	REVISIONS	BY	DATE
	PUBLISHED		
C	100% DESIGN REVIEW	JT	10/23
B	90% DESIGN REVIEW	JT	9/23
A	50% DESIGN REVIEW	JT	5/23

This document or any part thereof in detail or design concept is the property of Forsgren Associates Inc. and shall not be copied without the written authorization of Forsgren Associates Inc.

DRAWN DJ
DESIGNED MEC
APPROVED
QA MLL

ATTENTION
LINE IS 2-INCHES
AT 24"x36" SIZE
IF NOT 2-INCHES, SCALE DRAWING ACCORDINGLY

PROFESSIONAL ENGINEER
No. 13614104-2202
BRENT WELTON
STATE OF UTAH
10/04/2023

FISHERIES EXPERIMENT STATION
UTAH DIVISION OF WILDLIFE RESOURCES
1465 WEST 200 NORTH
LOGAN, UTAH 84321

UTAH DNR WILDLIFE RESOURCES

McMillen

Blue Stakes of UTAH 811 Bluestakes.org

WARN WATER AQUACULTURE BUILDING
LOGAN HATCHERY IMPROVEMENT PROJECT

HATCHERY BUILDING INCUBATION BOOSTER PUMP SECTIONS AND DETAILS 1

PROJECT NO: 14-23-0005
SHEET NO: M204
DATE: 10-2023
PAGE NO: 99

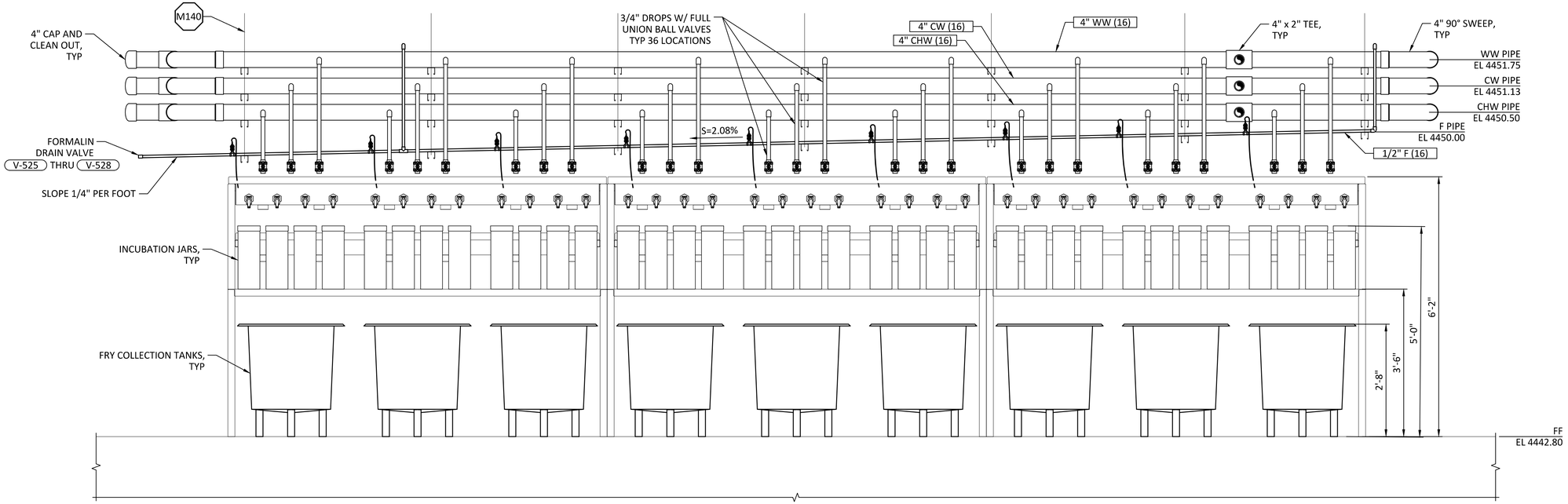

1 M202 ENLARGED DETAIL
SCALE: 3/4"= 1'-0"

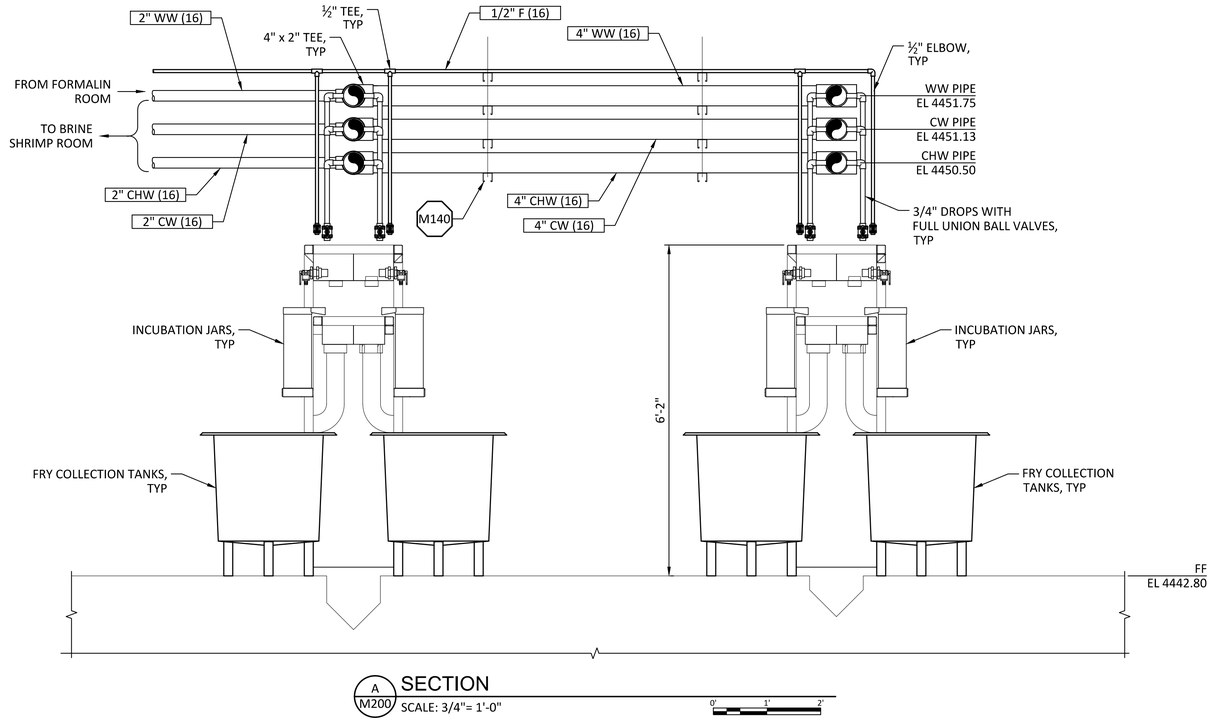

A M200 SECTION
SCALE: 3/4"= 1'-0"

REVIEWED FOR CODE COMPLIANCE
Thomas W Peterson
12/14/2023
DIVISION OF FACILITIES CONSTRUCTION AND MANAGEMENT
DFCM CODE COMPLIANCE OFFICER

NO.	REVISIONS	BY	DATE
	PUBLISHED		
C	100% DESIGN REVIEW	JT	10/23
B	90% DESIGN REVIEW	JT	9/23
A	50% DESIGN REVIEW	JT	5/23

This document or any part thereof in detail or design concept is the property of Forsgren Associates Inc. and shall not be copied without the written authorization of Forsgren Associates Inc.

DRAWN DJ
DESIGNED MEC
APPROVED
QA MLL

ATTENTION
LINE IS 2-INCHES AT 24"x36" SIZE
IF NOT 2-INCHES, SCALE DRAWING ACCORDINGLY

PROFESSIONAL ENGINEER — No. 13614104-2202 — BRENT WELTON — STATE OF UTAH — 10/04/2023

FISHERIES EXPERIMENT STATION
UTAH DIVISION OF WILDLIFE RESOURCES
1465 WEST 200 NORTH
LOGAN, UTAH 84321

UTAH DNR WILDLIFE RESOURCES

McMillen

Blue Stakes of UTAH 811 Bluestakes.org

WARN WATER AQUACULTURE BUILDING
LOGAN HATCHERY IMPROVEMENT PROJECT

HATCHERY BUILDING INCUBATION
PIPING SECTIONS AND DETAILS

PROJECT NO: 14-23-0005
SHEET NO: M205
DATE: 10-2023
PAGE NO: 100

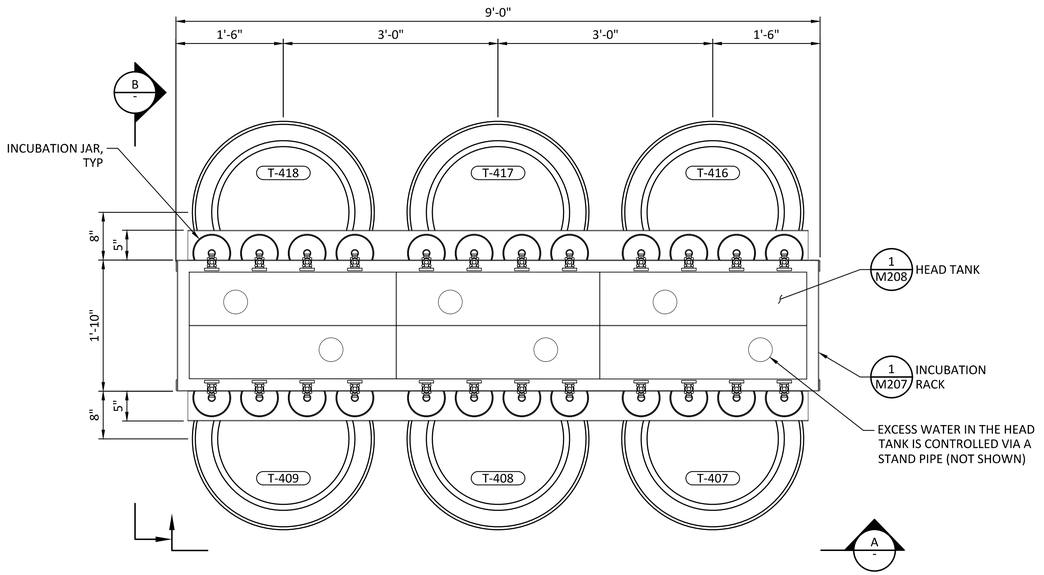

1 M200 INCUBATION BAY DETAIL
SCALE: 1"= 1'-0"

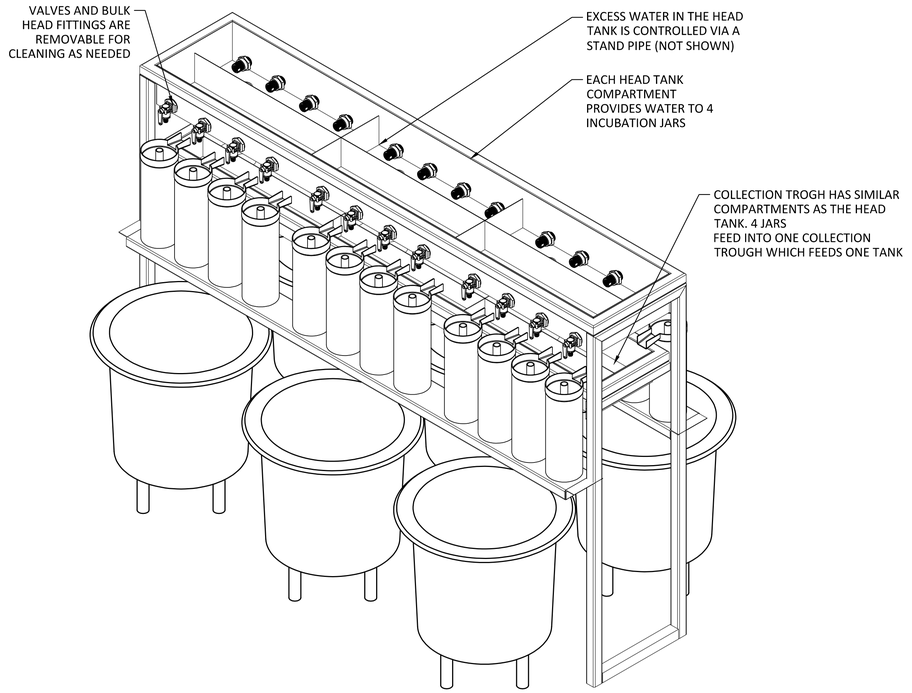

ISOMETRIC VIEW
SCALE: NTS

SHEET NOTES:

1. HEAD TANK IS FED BY CHILLED WATER 47 DEG F, COLD WATER 55 DEG F, WARM WATER 63 DEG F, (SUPPLY PIPING NOT SHOWN HERE)
2. EACH HEAD TANK FEEDS 4 BELL JARS. THOSE 4 JARS FEED INTO A COLLECTION TROUGH WHICH THEN FEEDS INTO A SINGLE TANK.
3. THERE ARE 144 BELL JARS AND 36 TANKS.
4. TANKS ARE 2' DIA. X 2' TALL (36x)

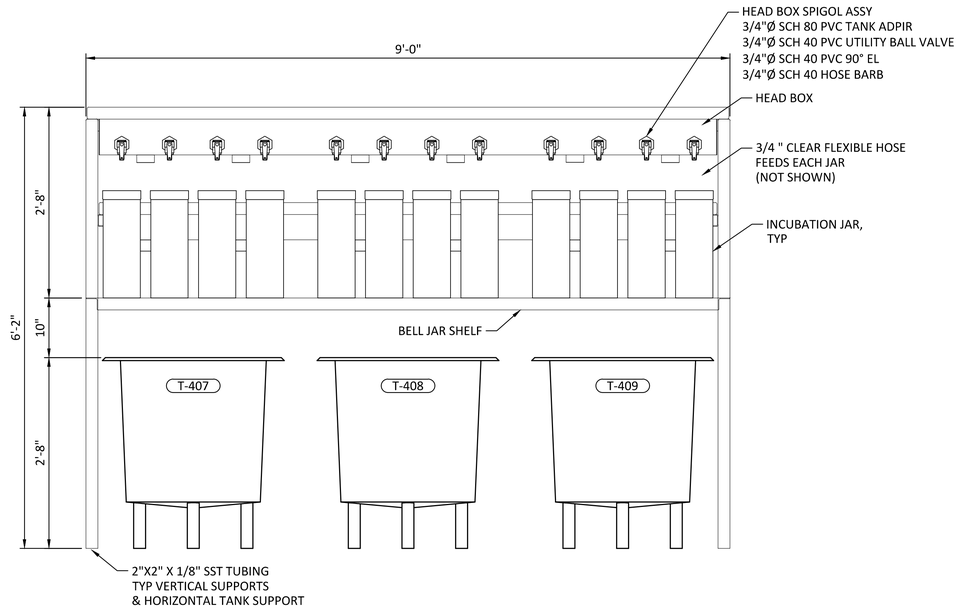

A - INCUBATION BAY DETAIL
SCALE: 1"= 1'-0"

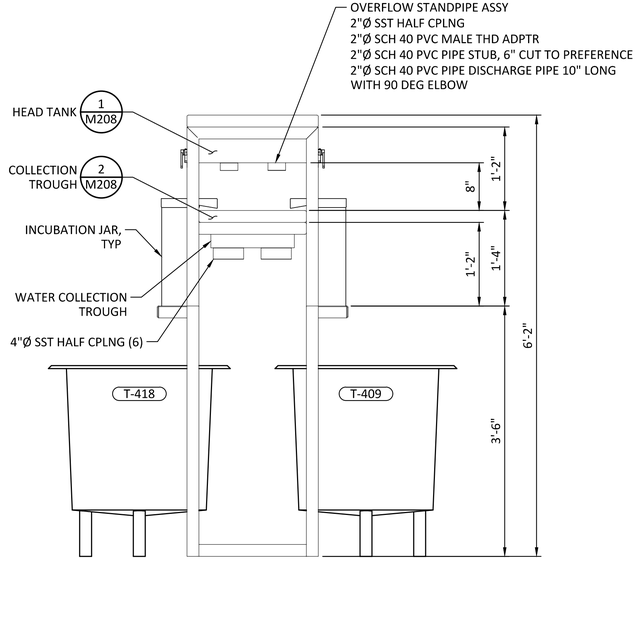

B - INCUBATION BAY DETAIL
SCALE: 1"= 1'-0"

REVIEWED FOR CODE COMPLIANCE
Thomas W Peterson
12/14/2023
DIVISION OF FACILITIES CONSTRUCTION AND MANAGEMENT
DFCM CODE COMPLIANCE OFFICER

NO.	REVISIONS	BY	DATE
	PUBLISHED		
C	100% DESIGN REVIEW	JT	10/23
B	90% DESIGN REVIEW	JT	9/23
A	50% DESIGN REVIEW	JT	5/23

This document or any part thereof in detail or design concept is the property of Forsgren Associates Inc. and shall not be copied without the written authorization of Forsgren Associates Inc.

DRAWN DJ
DESIGNED MEC
APPROVED
QA MLL

ATTENTION
LINE IS 2-INCHES
AT 24"x36" SIZE
IF NOT 2-INCHES, SCALE DRAWING ACCORDINGLY

PROFESSIONAL ENGINEER — No. 13614104-2202 — BRENT WELTON — STATE OF UTAH — 10/04/2023

FISHERIES EXPERIMENT STATION
UTAH DIVISION OF WILDLIFE RESOURCES
1465 WEST 200 NORTH
LOGAN, UTAH 84321

UTAH DNR WILDLIFE RESOURCES

McMillen

Blue Stakes of UTAH 811 Bluestakes.org

WARN WATER AQUACULTURE BUILDING
LOGAN HATCHERY IMPROVEMENT PROJECT

HATCHERY BUILDING INCUBATION RACK
PLAN AND ELEVATION

PROJECT NO: 14-23-0005
SHEET NO: M206
DATE: 10-2023
PAGE NO: 101

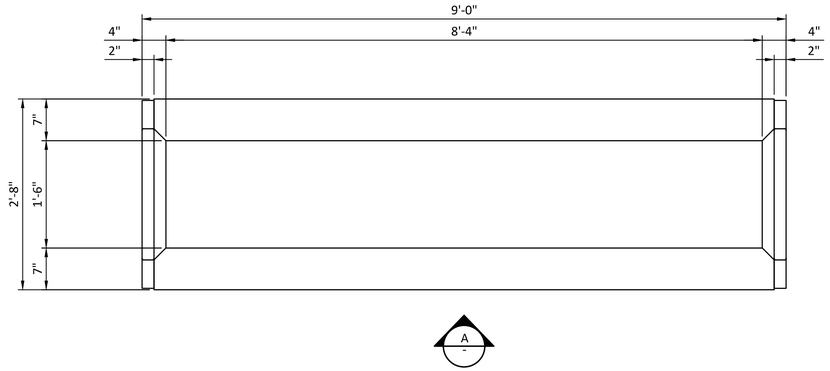

1 M206 INCUBATION RACK ASSEMBLY
SCALE: 1"= 1'-0"

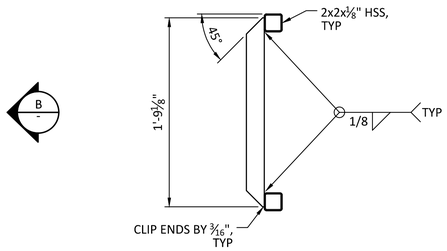

C - SIDE ELEVATION
SCALE: 1 1/2"= 1'-0"

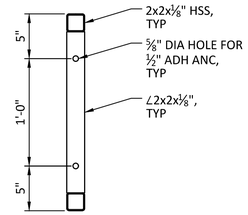

D - SIDE ELEVATION
SCALE: 1 1/2"= 1'-0"

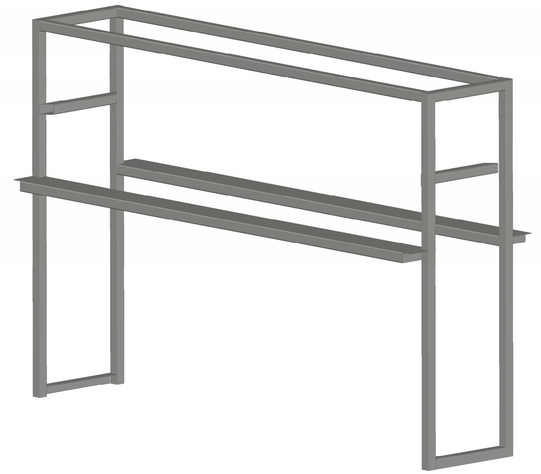

INCUBATION RACK ISOMERIC
SCALE: NTS

SHEET NOTES:

1. ALL MATERIAL IS 304 OR 316 SERIES STAINLESS STEEL.
2. SEE 05 50 00 MISC METALS.
3. 6 INCUBATION RACK WELDMENTS ARE REQUIRED

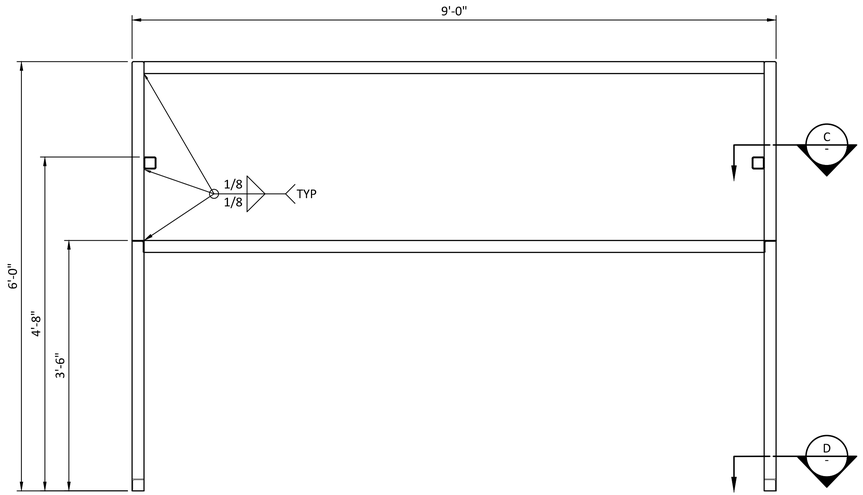

A - FRONT ELEVATION
SCALE: 1"= 1'-0"

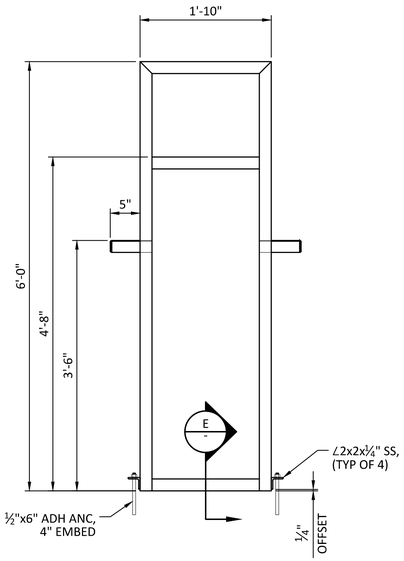

B - SIDE ELEVATION
SCALE: 1"= 1'-0"

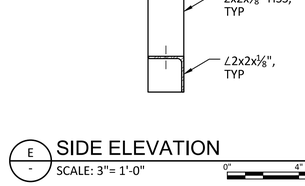

E - SIDE ELEVATION
SCALE: 3"= 1'-0"

REVIEWED FOR CODE COMPLIANCE
Thomas W Peterson
12/14/2023
DIVISION OF FACILITIES CONSTRUCTION AND MANAGEMENT

DFCM CODE COMPLIANCE OFFICER

	PUBLISHED		
C	100% DESIGN REVIEW	JT	10/23
B	90% DESIGN REVIEW	JT	9/23
A	50% DESIGN REVIEW	JT	5/23
NO.	REVISIONS	BY	DATE

This document or any part thereof in detail or design concept is the property of Forsgren Associates Inc. and shall not be copied without the written authorization of Forsgren Associates Inc.

DRAWN DJ
DESIGNED MEC
APPROVED
QA MLL

ATTENTION
LINE IS 2-INCHES
AT 24"x36" SIZE
IF NOT 2-INCHES, SCALE DRAWING ACCORDINGLY

PROFESSIONAL ENGINEER
No. 13614104-2202
BRENT WELTON
STATE OF UTAH
10/04/2023

FISHERIES EXPERIMENT STATION
UTAH DIVISION OF WILDLIFE RESOURCES
1465 WEST 200 NORTH
LOGAN, UTAH 84321

UTAH DNR WILDLIFE RESOURCES

McMillen

Blue Stakes of UTAH 811 bluestakes.org

WARN WATER AQUACULTURE BUILDING
LOGAN HATCHERY IMPROVEMENT PROJECT
HATCHERY BUILDING INCUBATION RACK ASSEMBLY SECTION AND DETAILS 1

PROJECT NO: 14-23-0005
SHEET NO: M207
DATE: 10-2023
PAGE NO: 102

SHEET NOTES:

1. ALL MATERIAL IS 304 OR 316 SERIES STAINLESS STEEL.
2. SEE 05 50 00 MISC METALS.
3. 6 HEAD TANK WELDMENTS ARE REQUIRED.
4. 6 COLLECTION TROUGH WELDMENTS ARE REQUIRED.

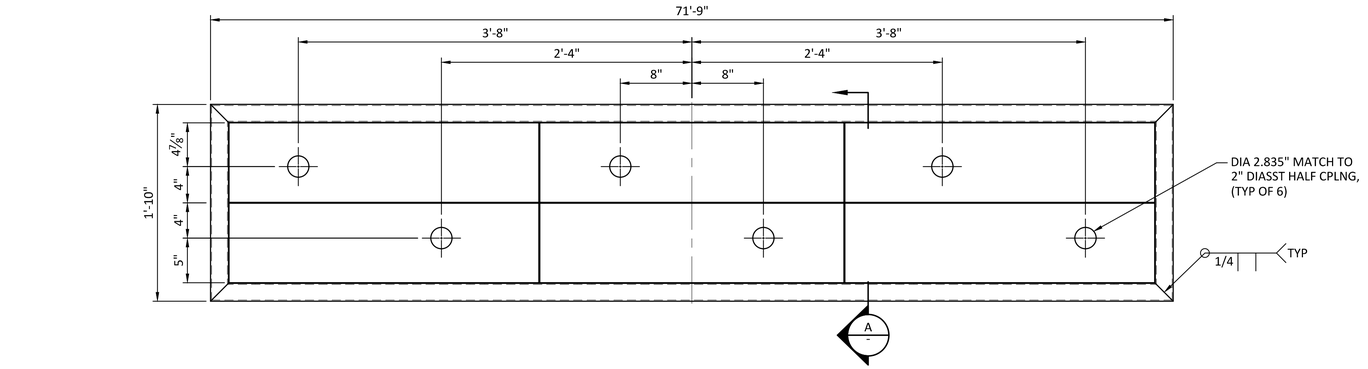

1 M206 HEAD TANK
SCALE: 3"= 1'-0"

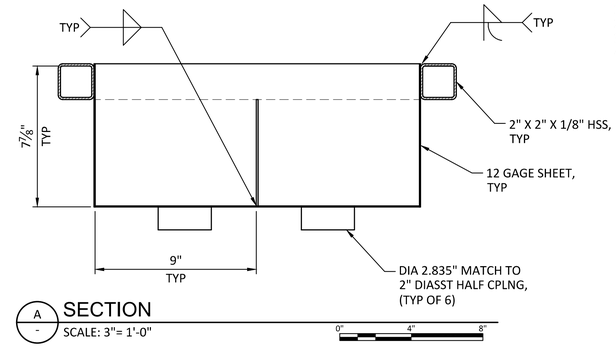

A - SECTION
SCALE: 3"= 1'-0"

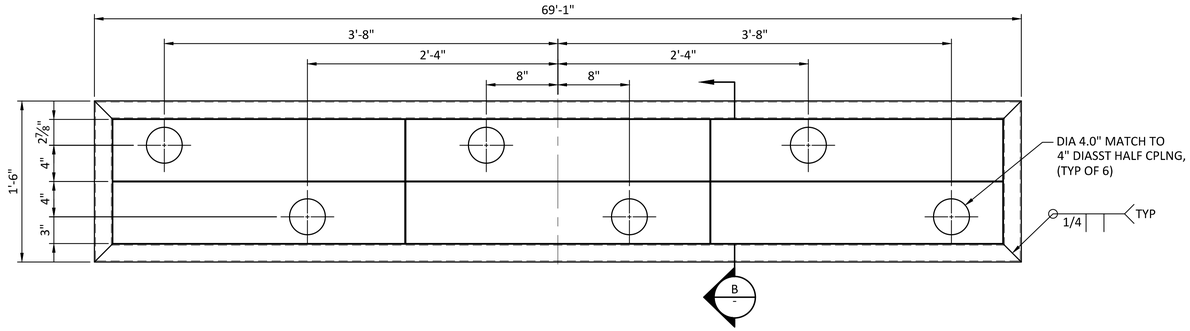

2 M206 COLLECTION TROUGH
SCALE: 3"= 1'-0"

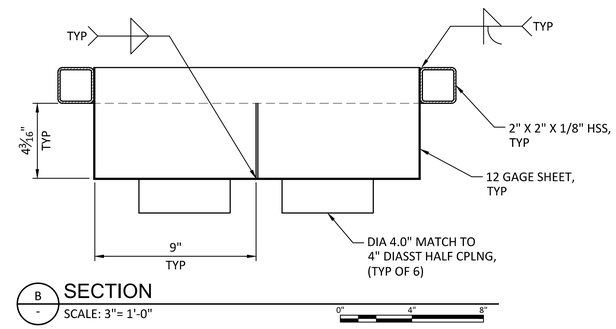

B - SECTION
SCALE: 3"= 1'-0"

REVIEWED FOR CODE COMPLIANCE
Thomas W Peterson
12/14/2023
DIVISION OF FACILITIES CONSTRUCTION AND MANAGEMENT

DFCM CODE COMPLIANCE OFFICER

NO.	REVISIONS	BY	DATE
	PUBLISHED		
C	100% DESIGN REVIEW	JT	10/23
B	90% DESIGN REVIEW	JT	9/23
A	50% DESIGN REVIEW	JT	5/23

This document or any part thereof in detail or design concept is the property of Forsgren Associates Inc. and shall not be copied without the written authorization of Forsgren Associates Inc.

DRAWN DJ
DESIGNED MEC
APPROVED
QA MLL

ATTENTION
LINE IS 2-INCHES
AT 24"x36" SIZE
IF NOT 2-INCHES, SCALE DRAWING ACCORDINGLY

PROFESSIONAL ENGINEER
No. 13614104-2202
BRENT WELTON
STATE OF UTAH
10/04/2023

FISHERIES EXPERIMENT STATION
UTAH DIVISION OF WILDLIFE RESOURCES
1465 WEST 200 NORTH
LOGAN, UTAH 84321

UTAH DNR WILDLIFE RESOURCES

McMillen

Blue Stakes of UTAH 811 Bluestakes.org

WARN WATER AQUACULTURE BUILDING
LOGAN HATCHERY IMPROVEMENT PROJECT

HATCHERY BUILDING INCUBATION RACK
SECTIONS AND DETAILS 2

PROJECT NO: 14-23-0005
SHEET NO: M208
DATE: 10-2023
PAGE NO: 103

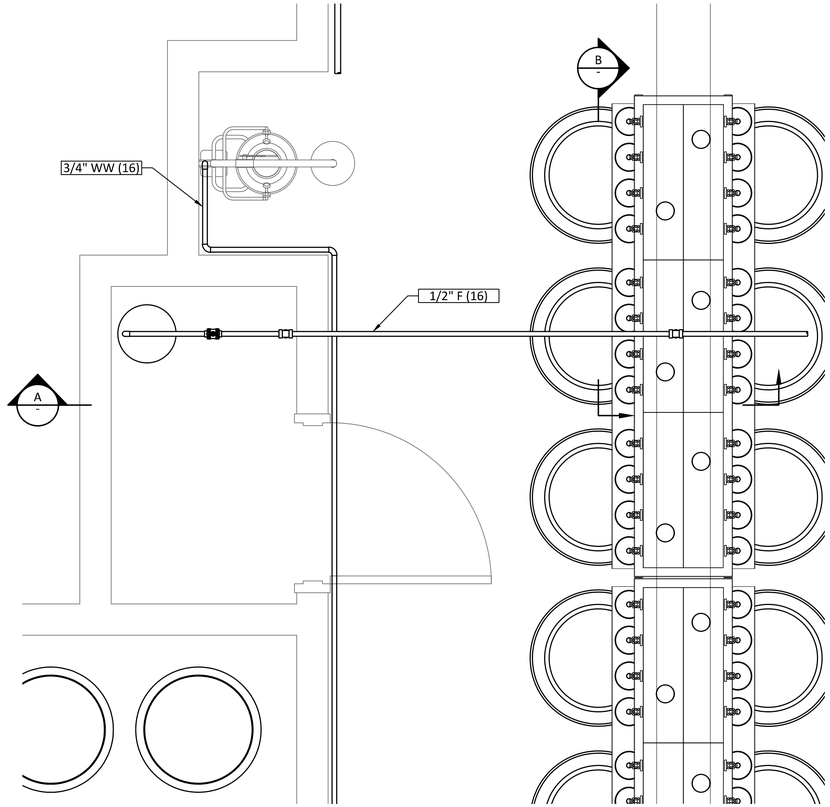

1 M200 INCUBATION FORMALIN DELIVERY LAYOUT
SCALE: 3/4"= 1'-0"
0" 1' 2'

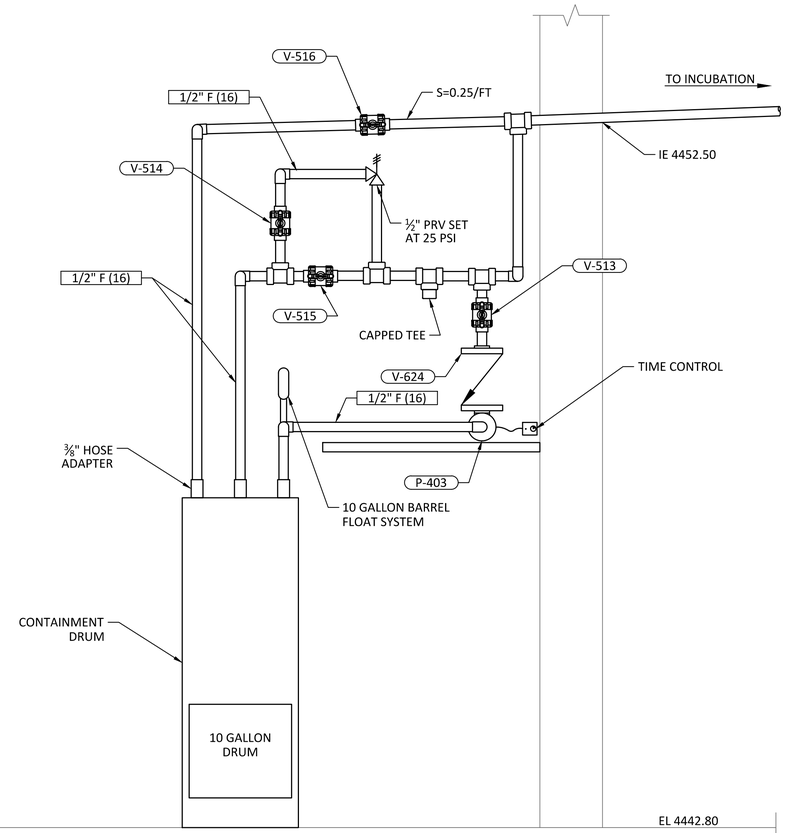

A - FORMALIN DISRIBUTION SYSTEM
SCALE: 1 1/2"= 1'-0"
0" 8" 16"

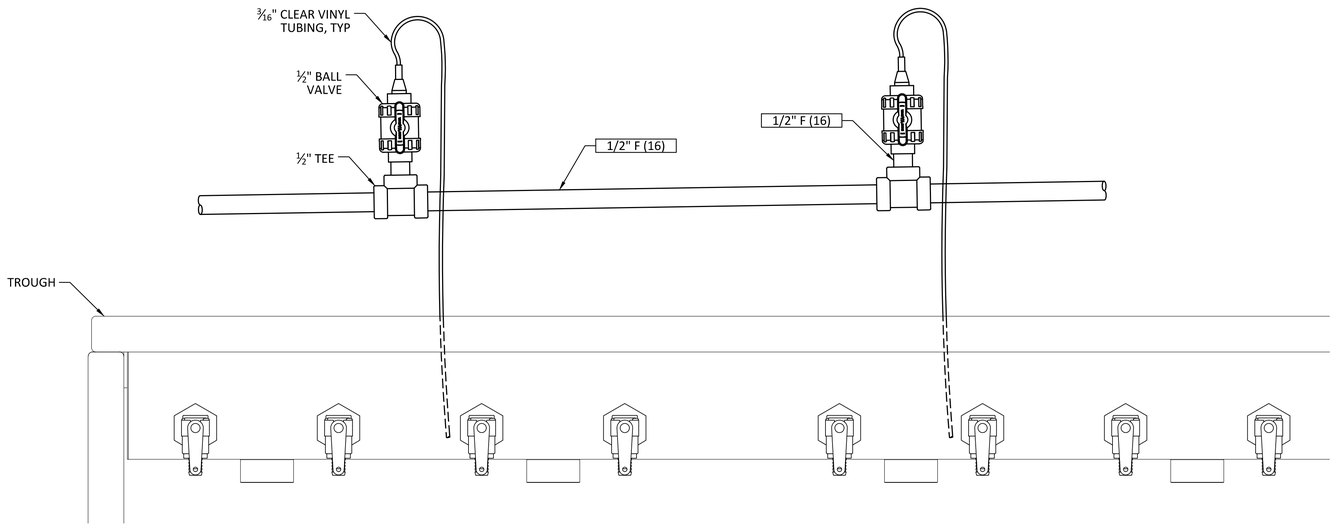

B - INCUBATION FORMALIN PIPING SECTION
SCALE: 3"= 1'-0"
0" 4" 8"

REVIEWED FOR CODE COMPLIANCE
Thomas W Peterson
12/14/2023
DIVISION OF FACILITIES CONSTRUCTION AND MANAGEMENT
DFCM CODE COMPLIANCE OFFICER

	PUBLISHED		
C	100% DESIGN REVIEW	JT	10/23
B	90% DESIGN REVIEW	JT	9/23
A	50% DESIGN REVIEW	JT	5/23
NO.	REVISIONS	BY	DATE

This document or any part thereof in detail or design concept is the property of Forsgren Associates Inc. and shall not be copied without the written authorization of Forsgren Associates Inc.

DRAWN DJ
DESIGNED MEC
APPROVED
QA MLL

ATTENTION
LINE IS 2-INCHES
AT 24"x36" SIZE
IF NOT 2-INCHES,
SCALE DRAWING ACCORDINGLY

PROFESSIONAL ENGINEER
No. 13614104-2202
BRENT WELTON
STATE OF UTAH
10/04/2023

FISHERIES EXPERIMENT STATION
UTAH DIVISION OF WILDLIFE RESOURCES
1465 WEST 200 NORTH
LOGAN, UTAH 84321

UTAH DNR WILDLIFE RESOURCES

McMillen

Blue Stakes of UTAH 811 Bluestakes.org

WARN WATER AQUACULTURE BUILDING
LOGAN HATCHERY IMPROVEMENT PROJECT
HATCHERY BUILDING
FORMALIN DISTRIBUTION SYSTEM
SECTIONS AND DETAILS 1

PROJECT NO: 14-23-0005
SHEET NO: M209
DATE: 10-2023
PAGE NO: 104

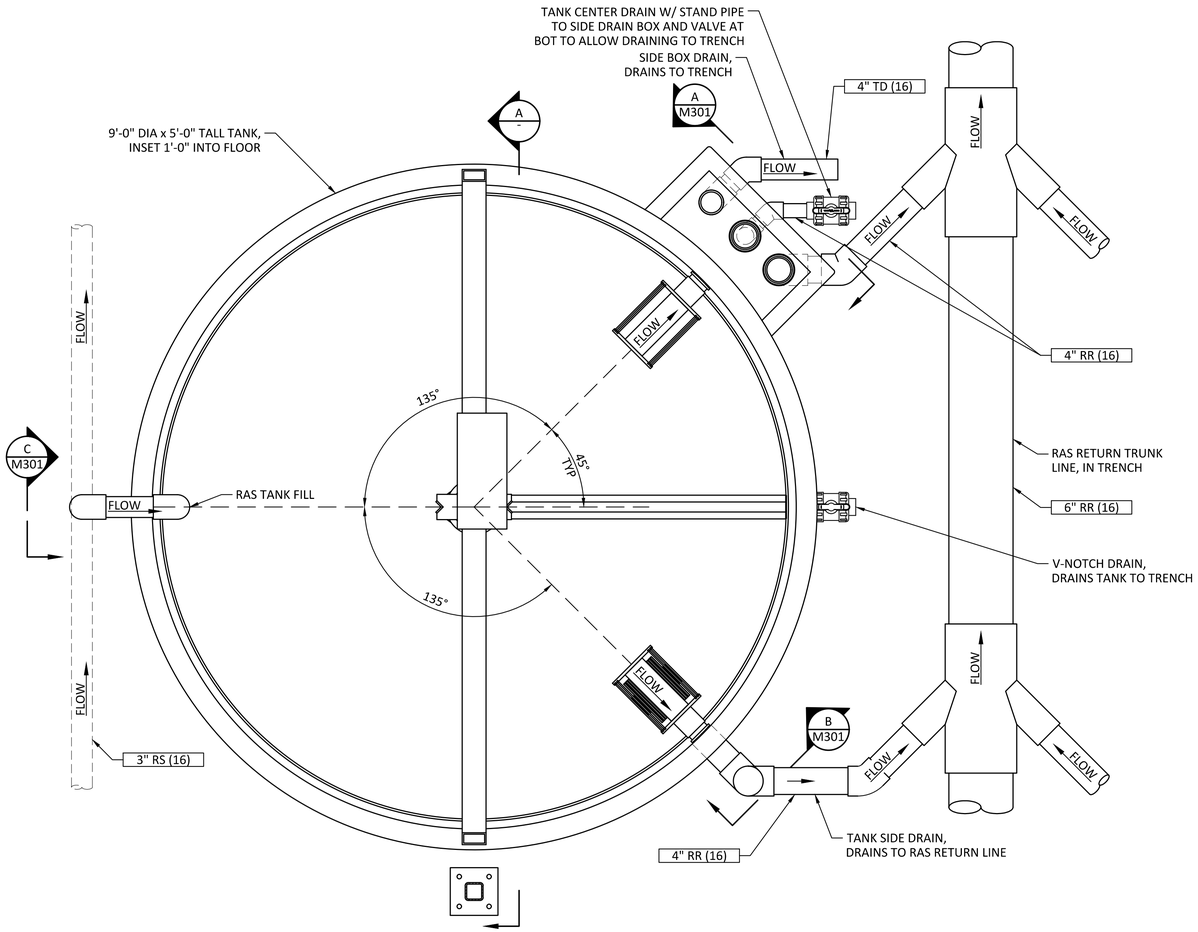

1 M102 TYPICAL TANK LAYOUT PLAN
SCALE: 1"= 1'-0"

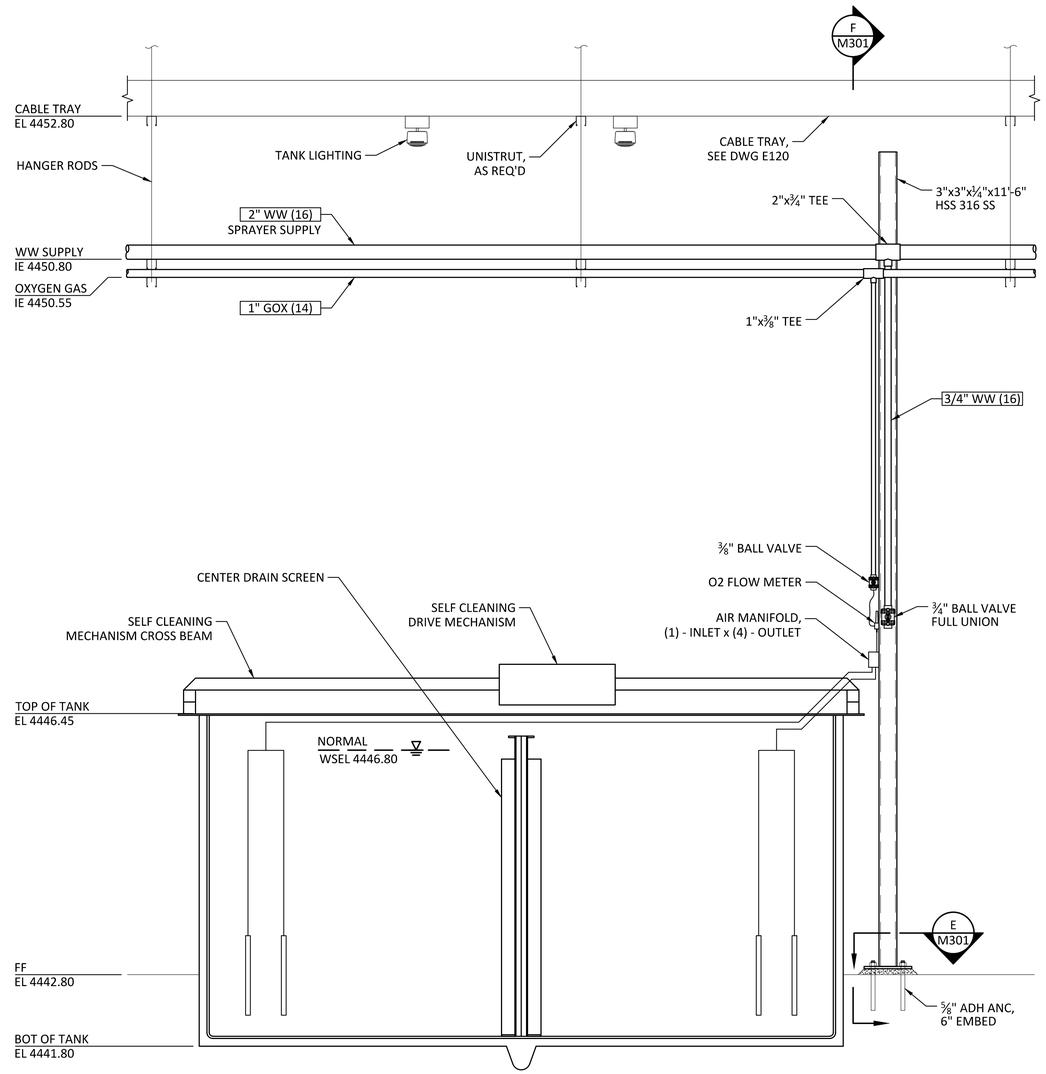

A - TYPICAL TANK LAYOUT SECTION
SCALE: 1"= 1'-0"

REVIEWED FOR CODE COMPLIANCE
Thomas W Peterson
12/1/2023
DIVISION OF FACILITIES CONSTRUCTION AND MANAGEMENT
DFCM CODE COMPLIANCE OFFICER

	PUBLISHED		
C	100% DESIGN REVIEW	JT	10/23
B	90% DESIGN REVIEW	JT	9/23
A	50% DESIGN REVIEW	JT	5/23
NO.	REVISIONS	BY	DATE

This document or any part thereof in detail or design concept is the property of Forsgren Associates Inc. and shall not be copied without the written authorization of Forsgren Associates Inc.

DRAWN DJ
DESIGNED MEC
APPROVED
QA MLL

ATTENTION
LINE IS 2-INCHES
AT 24"x36" SIZE
IF NOT 2-INCHES,
SCALE DRAWING ACCORDINGLY

PROFESSIONAL ENGINEER
No. 13614104-2202
BRENT WELTON
STATE OF UTAH
10/04/2023

FISHERIES EXPERIMENT STATION
UTAH DIVISION OF WILDLIFE RESOURCES
1465 WEST 200 NORTH
LOGAN, UTAH 84321

UTAH DNR WILDLIFE RESOURCES

McMillen

Blue Stakes of UTAH 811 Bluestakes.org

WARN WATER AQUACULTURE BUILDING
LOGAN HATCHERY IMPROVEMENT PROJECT

HATCHERY BUILDING REARING TANK
PLAN, SECTIONS AND DETAILS

PROJECT NO: 14-23-0005
SHEET NO: M300
DATE: 10-2023
PAGE NO: 105

SHEET NOTES:

1. ELEVATION MAY BE ADJUSTED TO MAINTAIN THE REQUIRED STRAIGHT RUN OF PIPING FOR THE FLOW SWITCH INSTALLATION. INSTALL WITH MINIMUM 12 PIPE DIAMETERS UPSTREAM AND 5 PIPE DIAMETERS DOWNSTREAM.
2. USE LONG SWEEP TEES WHERE POSSIBLE, PROVIDED THAT NOTE 1 IS FOLLOWED. IF A LONG SWEEP REDUCING TEE IS NOT AVAILABLE, IT IS PERMITTED TO ADD A REDUCER TO THE TEE TO BRING THE PIPE SIZE DOWN TO THE 3" TANK RISER.

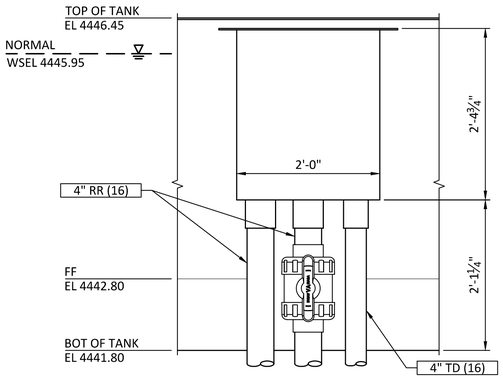

A M300 STAND PIPE SIDE BOX SECTION
SCALE: 1"= 1'-0"

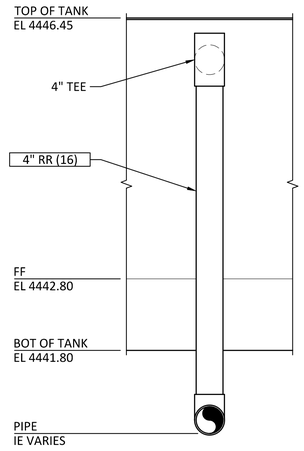

B M300 RAS RETURN SECTION
SCALE: 1"= 1'-0"

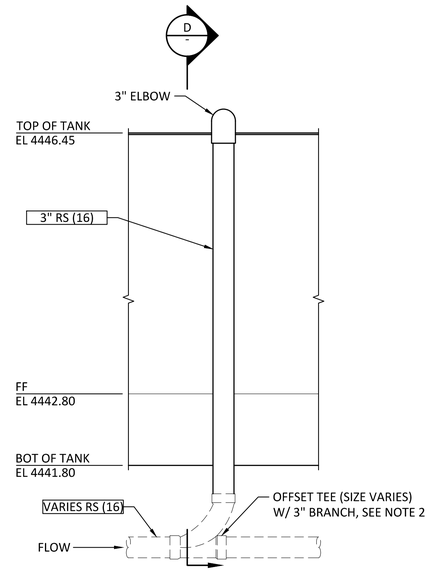

C M300 RAS SUPPLY LINE SECTION
SCALE: 1"= 1'-0"

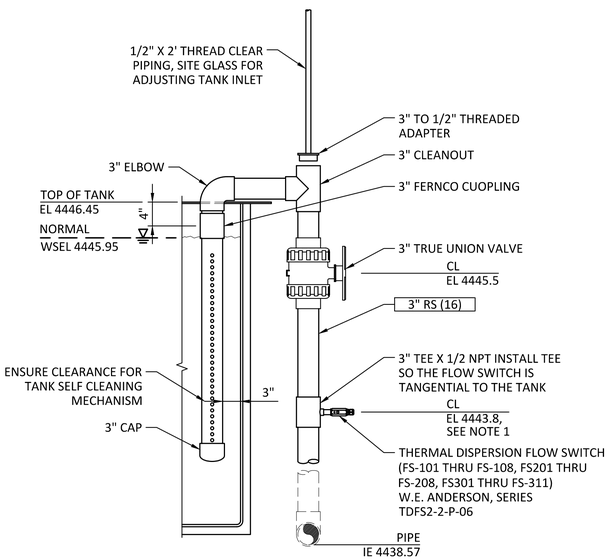

D - RAS SUPPLY LINE SECTION
SCALE: 1"= 1'-0"

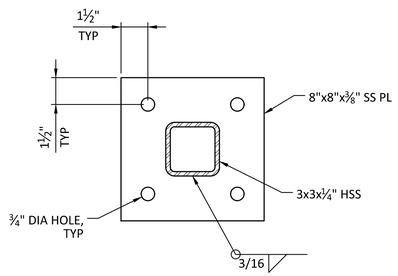

E M300 BASE PLATE SECTION
SCALE: 3"= 1'-0"

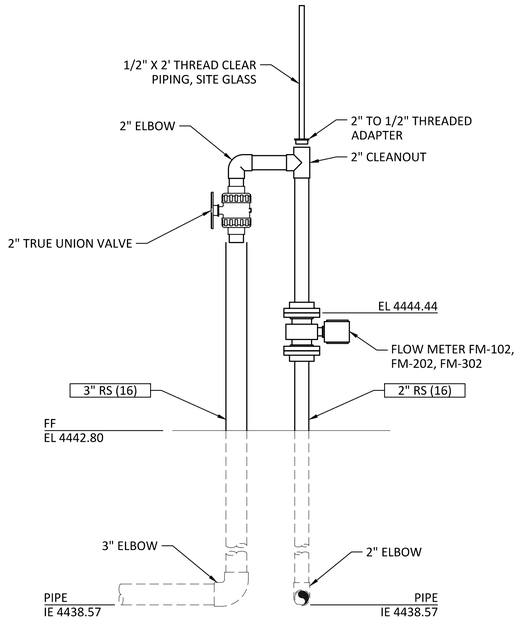

G M101 RAS SUPPLY LINE SECTION
SCALE: 1"= 1'-0"

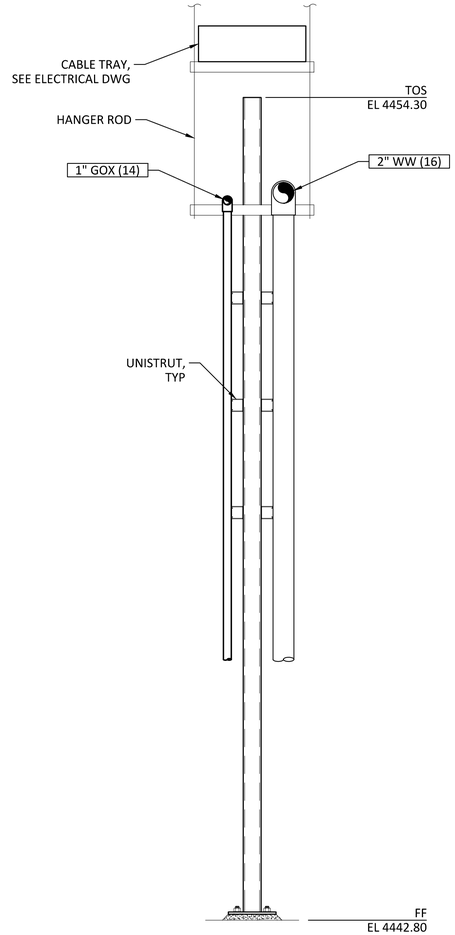

F M300 DOWN LEG SUPPORT
SCALE: 1"= 1'-0"

REVIEWED FOR CODE COMPLIANCE
Thomas W Peterson
12/14/2023
DIVISION OF FACILITIES CONSTRUCTION AND MANAGEMENT

DFCM CODE COMPLIANCE OFFICER

	PUBLISHED		
C	100% DESIGN REVIEW	JT	10/23
B	90% DESIGN REVIEW	JT	9/23
A	50% DESIGN REVIEW	JT	5/23
NO.	REVISIONS	BY	DATE

This document or any part thereof in detail or design concept is the property of Forsgren Associates Inc. and shall not be copied without the written authorization of Forsgren Associates Inc.

DRAWN DJ
DESIGNED MEC
APPROVED
QA MLL

ATTENTION
LINE IS 2-INCHES
AT 24"x36" SIZE
IF NOT 2-INCHES,
SCALE DRAWING ACCORDINGLY

PROFESSIONAL ENGINEER
No. 13614104-2202
BRENT WELTON
STATE OF UTAH
10/04/2023

FISHERIES EXPERIMENT STATION
UTAH DIVISION OF WILDLIFE RESOURCES
1465 WEST 200 NORTH
LOGAN, UTAH 84321

UTAH DNR WILDLIFE RESOURCES

McMillen

Blue Stakes of UTAH 811 Bluestakes.org

WARN WATER AQUACULTURE BUILDING
LOGAN HATCHERY IMPROVEMENT PROJECT

HATCHERY BUILDING REARING TANKS
SECTIONS AND DETAILS

PROJECT NO: 14-23-0005
SHEET NO: M301
DATE: 10-2023
PAGE NO: 106

IEEE STANDARD CONTROL AND PROTECTION DEVICES FUNCTION NUMBERS

01	MASTER ELEMENT
02	TIME-DELAY STARTING OR CLOSING RELAY (TDPU)
03	CHECKING OR INTERLOCKING RELAY
04	MASTER CONTACTOR
05	STOPPING DEVICE
06	STARTING CIRCUIT BREAKER
07	RATE-OF-CHANGE RELAY
08	CONTROL POWER DISCONNECTING DEVICE
09	REVERSING DEVICE
10	UNIT SEQUENCE SWITCH
11	MULTIFUNCTION DEVICE
12	OVER-SPEED DEVICE
13	SYNCHRONOUS-SPEED DEVICE
14	UNDER-SPEED DEVICE
15	SPEED OR FREQUENCY MATCHING DEVICE
16	DATA COMMUNICATIONS DEVICE
17	SHUNTING OR DISCHARGE SWITCH
18	ACCELERATING OR DECELERATING DEVICE
19	STARTING-TO-RUNNING TRANSITION CONTACTOR
20	ELECTRONICALLY OPERATED VALVE
21	DISTANCE RELAY
22	EQUALIZER CIRCUIT BREAKER
23	TEMPERATURE CONTROL DEVICE
24	VOLTS PER HERTZ RELAY
25	SYNCHRONIZING OR SYNCHRONISM - CHECK DEVICE
26	APPARATUS THERMAL DEVICE
27	UNDERVOLTAGE RELAY
28	FLAME DETECTOR
29	ISOLATING CONTACTOR
30	ANNUNCIATOR RELAY
31	SEPARATE EXCITATION DEVICE
32	DIRECTIONAL POWER RELAY
33	POSITION SWITCH
34	MASTER SEQUENCE DEVICE
35	BRUSH-OPERATING OF SLIP-RING SHORT-CIRCUITING DEVICE
36	POLARITY OR POLARIZING VOLTAGE DEVICE
37	UNDERCURRENT OR UNDERPOWER RELAY
38	BEARING PROTECTIVE DEVICE
39	MECHANICAL CONDITION MONITOR
40	FIELD (OVER/UNDER EXCITATION) RELAY
41	FIELD CIRCUIT BREAKER
42	RUNNING CIRCUIT BREAKER
43	MANUAL TRANSFER OR SELECTOR DEVICE
44	UNIT SEQUENCE STARTING RELAY
45	ATMOSPHERIC CONDITION MONITOR
46	REVERSE-PHASE OR PHASE-BALANCE CURRENT RELAY
47	PHASE-SEQUENCE OR PHASE-BALANCE VOLTAGE RELAY
48	INCOMPLETE SEQUENCE RELAY
49	MACHINE OR TRANSFORMER THERMAL RELAY
50	INSTANTANEOUS OVERCURRENT OR RATE-OF-RISE RELAY
51	AC INVERSE TIME OVERCURRENT RELAY
52	AC CIRCUIT BREAKER
53	EXCITER OR DC GENERATOR RELAY
54	TURNING GEAR ENGAGING DEVICE
55	POWER FACTOR RELAY
56	FIELD APPLICATION RELAY
57	SHORT-CIRCUITING OR GROUNDING DEVICE
58	RECTIFICATION FAILURE RELAY
59	OVERVOLTAGE RELAY
60	VOLTAGE OR CURRENT BALANCE RELAY
61	DENSITY SWITCH OR SENSOR
62	TIME-DELAY STOPPING OR OPENING RELAY (TDDO)
63	PRESSURE SWITCH
64	GROUND DETECTOR RELAY
65	GOVERNOR
66	NOTCHING OR JOGGING DEVICE
67	AC DIRECTIONAL OVERCURRENT RELAY
68	BLOCKING RELAY
69	PERMISSIVE CONTROL DEVICE
70	RHEOSTAT
71	LEVEL SWITCH
72	DC CIRCUIT BREAKER
73	LOAD-RESISTOR CONTACTOR
74	ALARM RELAY
75	POSITION CHANGING MECHANISM
76	DC OVERCURRENT RELAY
77	PULSE TRANSMITTER
78	PHASE-ANGLE MEASURING OR OUT-OF-STEP PROTECTIVE RELAY
79	AC RECLOSING RELAY
80	FLOW SWITCH
81	FREQUENCY RELAY
82	DC RECLOSING RELAY
83	AUTOMATIC SELECTIVE CONTROL OR TRANSFER RELAY
84	OPERATING MECHANISM
85	CARRIER OR PILOT-WIRE RECEIVER RELAY
86	LOCKOUT RELAY
87	DIFFERENTIAL PROTECTIVE RELAY
88	AUXILIARY MOTOR OR MOTOR GENERATOR
89	LINE SWITCH
90	REGULATING DEVICE
91	VOLTAGE DIRECTIONAL RELAY
92	VOLTAGE AND POWER DIRECTIONAL RELAY
93	FIELD-CHANGING CONTACTOR
94	TRIPPING OR TRIP-FREE RELAY
95	RESERVED FOR FUTURE APPLICATION
96	RESERVED FOR FUTURE APPLICATION
97	RESERVED FOR FUTURE APPLICATION
98	CREEP DETECTOR DEVICE
99	RESERVED FOR FUTURE APPLICATION

METERING SYSTEMS AND DEVICES INDEX

A	AMMETER	PB	PUSHBUTTON
AH	AMPERE HOUR METER	PF	POWER FACTOR METER
AS	AMMETER SELECTOR SWITCH	PH	PHASE METER
C	COUNTER	PI	POSITION INDICATOR
CMA	CONTACT MAKING AMMETER	REC	RECORDER
CMC	CONTACT MAKING CLOCK	RF	REACTIVE FACTOR METER
CMV	CONTACT MAKING VOLTMETER	RPM	SPEED INDICATOR
CS	CONTROL STATION	SW	TRANSFER SWITCH
DM	DEMAND METER	SY	SYNCHROSCOPE
ETM	ELAPSE TIME METER	T	TEMPERATURE METER
F	FREQUENCY METER	TLM	TELEMETER
G	GALVANOMETER	TOC	TRUCK-OPERATED CONTACT
GD	GROUND FAULT DETECTOR	TS	TIME SWITCH
KV	KILO-VOLTMETER	V	VOLTMETER
KW	KILO-WATTMETER	VAR	VARMETER
KWH	KILO-WATT HOUR METER	VH	VAR HOUR METER
mA	MILLI-AMMETER (TRANSDUCER)	VS	VOLTMETER SELECTOR SWITCH
MOC	MECHANISM-OPERATED CONTACT	W	WATTMETER
OHM	OHMMETER	WH	WATT HOUR METER
OSC	OSCILLOGRAPH	WHDM	WATT HOUR DEMAND METER

NOTE: "R" IN FRONT OF LETTERS INDICATES A RECORDING TYPE METER.

PILOT - INDICATOR LIGHT INDEX

A	AMBER
B	BLUE
C	CLEAR
G	GREEN
NE	NEON
O	ORANGE
OP	OPALESCENT
P	PURPLE
R	RED
W	WHITE
Y	YELLOW

FIRST LETTER SUFFIX OF IEEE DEVICE DESIGNATION

A	GOVERNOR SYSTEM (OR ACTUATOR SYSTEMS - GATES)
B	BATTERY CHARGING AND MONITORING SYSTEM OR BUS
C	HIGH-VOLTAGE CABLE SYSTEM OR CLOSING RELAY/CONTACTOR
D	DATA ACQUISITION SYSTEM
E	EXCITATION SYSTEM INCLUDING TRANSFORMER AND REGULATOR BUT NOT MAIN FIELD
F	FIRE AND CO2 SYSTEM
G	MAIN GENERATOR INCLUDING AUXILIARY SYSTEMS OR GROUND
G/M	GENERATOR MOTOR INCLUDING AUXILIARY SYSTEMS IN PUMPED STORAGE APPLICATIONS
H	TURBINE OR MAIN PUMP INCLUDING AUXILIARY SYSTEMS
I	ISOLATED AND OTHER POWER BUS SYSTEMS (NOT HIGH VOLTAGE CABLE)
J	POWER CIRCUIT BREAKER INCLUDING AUXILIARY SYSTEMS
K	POWER TRANSFORMER INCLUDING AUXILIARY SYSTEMS
L	ANNUNCIATOR SYSTEM, SECURITY SYSTEM, LINE, OR LOWERING RELAY/CONTACTOR
M	MAIN PUMP MOTOR INCLUDING AUXILIARY SYSTEMS AND VARIABLE SPEED DRIVE
N	AIR (PNEUMATIC) SYSTEM OR NEUTRAL
O	OPENING RELAY/CONTACTOR
P	PENSTOCK OR DISCHARGE LINE SYSTEM
Q	OIL STORAGE, HANDLING, PURIFICATION SYSTEM
R	FIELD FLASHING SYSTEM, PHASE REVERSAL SWITCH INCLUDING AUXILIARY SYSTEM, OR RAISING RELAY/CONTACTOR
S	STATION SERVICE SUBSTATION SYSTEM INCLUDING ENGINE/GENERATOR SYSTEM
T	TONE AND TRANSFER TRIP SYSTEM OR TRANSFORMER
U	UNIT CONTROL CIRCUIT SYSTEM OR UNINTERRUPTIBLE POWER SUPPLY SYSTEM
V	INTAKE AND/OR DISCHARGE VALVE SYSTEM
W	WATER SYSTEMS INCLUDING INTAKE/OUTLET WORKS AND PLANT WATER AND SUMP SYSTEMS
X	DEFINED FOR SYSTEMS UNIQUE TO A FACILITY
Y	DEFINED FOR SYSTEMS UNIQUE TO A FACILITY
Z	DEFINED FOR SYSTEMS UNIQUE TO A FACILITY

SECOND AND SUBSEQUENT LETTER SUFFIXES OF THE IEEE DEVICE DESIGNATION

A	ABNORMAL, A.C., ACCELERATION, ADMISSION, ALARM, AMPERES, AUTOMATIC, AUXILIARIES, PHASE A, ECT.
B	BACKUP, BEARING, BLOCK, BLOWER, BOOSTER, BRAKES, BUS, BUTTON, BYPASS, PHASE B, ETC.
C	CABLE, CARRIER, CHARGER, CHECK, CHLORINATION, CLOSE, COLLECTOR, COMMON, COMPENSATOR, COMPRESSOR, CONTROL, COOLING, CURRENT, CYCLE, CYLINDER, PHASE C, CONVEYOR, ECT.
D	D.C, DECELERATION, DELAY, DEPRESS, DETECTOR, DIELECTRIC, DIFFERENTIAL, DISCHARGE, DISCONNECT, DISCORDANCE, DOMESTIC, DOWN, DOWNSTREAM, DRAFT TUBE, DRAIN, ETC.
E	EJECTOR, ELEVATOR, EMERGENCY, EXPLOSIVE, ETC.
F	FAILURE, FAN, FAULT, FEEDER, FIELD, FILTER, FIRE, FLAME, FLOW, FOLLOWER, FORWARD, FREQUENCY, FULL, FUMES, FUSE, ETC.
G	GAS, GATE, GATING (SCR), GENERATE, GROUND, GUIDE BEARING, ETC.
H	HALON, HAND, HEAT, HEATER, HIGH, HOIST, HORN, HOT, HOUSING, HYDROPNEUMATIC TANK, ETC.
I	INDICATION, INITIAL, INLET, INOUT, INSTANTANEOUS, INTAKE, INTERFACE, INTERLOCK, INTERRUPT, INVERTER, IONIZATION, ETC.
J	JACKING, JET, ETC.
K	KEY, TRANSFORMER
L	LAMPS, LEFT, LEVEL, LIGHTS, LIMITS, LINE, LIQUID, LOCAL, LOGIC, LOSS, LOUVERS, LOW, LOWER, LUBRICATION, ETC.
M	MAIN, MALFUNCTION, MANUAL, METER, METERING, MOTOR, ETC.
N	NEGATIVE, NETWORK, NEUTRAL, NORMAL, ETC.
O	OPEN, OUTLET, OUTPUT, ETC.
P	PACKING BOX, PARALLEL, PARAMETER, PENSTOCK, PHASE, PHASEBACK, PILOT, PIT, POSITION, POTENTIAL, POTHEAD, POWER, PRESSURE, PRIMARY, PROTECTION, PULSE, PUMP, PURIFICATION, PUSH, ETC.
Q	OIL, ETC.
R	RAISE, REACTOR, RECLOSE, RECORD, RECTIFIER, REED, REFRIGERATION, REGULATE, RELAY, RELEASE, RELIEF, REMOTE, RESERVOIR, RESET, RESISTOR, RIGHT, ROTATION, ROTOR, RUNNER, ETC.
S	SEALS, SECONDARY, SELECTOR, SEWAGE, SHORTING, SHUTDOWN, SIGNAL, SKIMMER, SLUDGE, SMOKE, SOLENOID, SPEED, SPIRAL OR SCROLL CASE, SPLICE, STABILIZER, STANDBY, STARTING, STATOR, STEPPING, STORAGE, STRAINER, SUCTION, SUMP, SUPPLY, SWITCH, SYNCHRONIZING, ETC.
T	TANK, TEMPERATURE, TEST, THERMAL, THRUST BEARING, THYRATRON, TIE, TIME, TRANSDUCER, TRANSER, TRANSMITTER, TRIP, TROUBLE, TRASHRAKE, ETC.
U	UNIT, UNLOADER, UNWATERING, UP, UPPER, UPSTREAM, ETC.
V	VALVE, VARS, VIBRATION. VOLTAGE, ETC.
W	WATER, WATTS, WINDINGS, ETC.
X	AUXILIARY DEVICE, ETC.
Y	AUXILIARY TO DEVICE X, ANTIPUMP RELAY, ETC.
Z	AUXILIARY TO DEVICE Y

ABBREVIATIONS

A, AMP	AMP, AMPERE
AAAC	ALL ALUMINUM ALLOY CONDUCTOR
AC	ALTERNATING CURRENT
ACT	ACTUATOR
AF	AMPERE FRAME SIZE
AFD	ADJUSTABLE FREQUENCY DRIVE
AFF	ABOVE FINISHED FLOOR
AH	AMPERE HOURS
AHJ	AUTHORITY HAVING JURISDICTION
AHU	AIR HANDLING UNIT
AL	ALUMINUM
A/R	AS REQUIRED
AT	AMPERE TRIP
ATS	AUTOMATIC TRANSFER SWITCH
AVR	AUTOMATIC VOLTAGE REGULATOR
BAT	BATTERY
C	CONDUIT
CB	CIRCUIT BREAKER
CKT	CIRCUIT
CLF	CURRENT LIMITING FUSE
CO	CONDUIT ONLY
CP	CONTROL PANEL
CPT	CONTROL POWER TRANSFORMER
CR	CONTROL RELAY
CS	CONTROL SWITCH
CT	CURRENT TRANSFORMER
DC	DIRECT CURRENT
DCS	DISTRIBUTED CONTROL SYSTEM
DISC	DISCONNECT
DP	DISTRIBUTION PANEL
DPDT	DOUBLE-POLE, DOUBLE-THROW
DPST	DOUBLE-POLE, SINGLE-THROW
EDH	ELECTRIC DUCT HEATER
EG	ENGINE GENERATOR
EPT	EXCITATION POWER TRANSFORMER
EUH	ELECTRIC UNIT HEATER
EV	ELECTRICAL VAULT
F, FU	FUSE
FA	FIRE ALARM
FACP	FIRE ALARM CONTROL PANEL
FAS	FIRE ALARM SYSTEM
FREQ	FREQUENCY
FS	FLOAT SWITCH
FT	FLOW TRANSMITTER
FVNR	FULL VOLTAGE NON-REVERSING
FVR	FULL VOLTAGE REVERSING
GEN	GENERATOR
GFI	GROUND-FAULT INTERRUPTION
GFP	GROUND-FAULT PROTECTION
GND	GROUND
GPR	GENERATOR PROTECTION RELAY
GSU	GENERATOR STEP-UP TRANSFORMER
HMI	HUMAN-MACHINE INTERFACE
HOA	HAND-OFF-AUTO
HOR	HAND-OFF-REMOTE
HPU	HYDRAULIC POWER UNIT
HTR	HEATER
HZ	HERTZ (CYCLES PER SECOND)
IC	INTERRUPTING CAPACITY
I & C	INSTRUMENTATION AND CONTROL
I/O	INPUT/OUTPUT
INST	INSTANTANEOUS
INTLK	INTERLOCK
IP	INTERNET PROTOCOL
K	KEY INTERLOCK
kV	KILOVOLTS
kVA	KILOVOLT AMPERES (APPARENT POWER)
kVAR	KILOVARS (REACTIVE POWER)
kW	KILOWATTS (REAL POWER)
kWH	KILOWATT HOUR
LC	LIGHTING CONTROLLER
LCP	LOCAL CONTROL PANEL
LE	LEVEL ELEMENT
LIT	LEVEL INDICATING TRANSMITTER
LOR	LOCAL-OFF-REMOTE
LP	LIGHTING PANEL
LS	LEVEL SWITCH
LT	LEVEL TRANSMITTER
mA	MILLIAMPERES
M	MOTOR, MAN, MANUAL
MAG	MAGNETIC
MCC	MOTOR CONTROL CENTER
MDP	MAIN DISTRIBUTION PANEL
MFM	MULTIFUNCTIONAL METER
MPR	MOTOR PROTECTION RELAY
MTS	MANUAL TRANSFER SWITCH
mV	MILLIVOLTS
MVA	MEGAVOLT AMPERES (APPARENT POWER)
MVAR	MEGAVARS (REACTIVE POWER)
MW	MEGAWATTS (REAL POWER)
MWH	MEGAWATT HOUR
NEUT	NEUTRAL
NGR	NEUTRAL GROUNDING RESISTOR
OHM	OHMMETER
OL	OVERLOAD
OPER	OPERATOR, OPERATED
PB	PANELBOARD, PULLBOX, PUSH BUTTON
PC	PHOTOCELL
PCB	POWER CIRCUIT BREAKER
PCC	POINT OF COMMON CONNECTION
PF	POWER FACTOR
PH, Ø	PHASE
PMP	PUMP
PNL	PANEL
PLC	PROGRAMMABLE LOGIC CONTROLLER
POI	POINT OF INTER-CONNECTION
PS	PRESSURE SWITCH
PTT	PUSH-TO-TEST
PWR	POWER
R	RELAY, REVERSE, RUN
RCP	RECEPTACLE
RIO	REMOTE I/O
RTD	RESISTANCE TEMPERATURE DETECTOR
RVNR	REDUCED VOLTAGE NON-REVERSING
RVR	REDUCED VOLTAGE REVERSING
S	SYNC SCOPE
SA	SURGE ARRESTER
SC	SURGE CAPACITOR
SDP	STANDBY DISTRIBUTION PANEL
SEL	SELECTOR, SCHWEITZER ENGINEERING LABORATORIES
SPD	SURGE PROTECTION DEVICE
SPDT	SINGLE-POLE, DOUBLE-THROW
SPST	SINGLE-POLE, SINGLE-THROW
S/S	STATION SERVICE
SUB	SUBMERSIBLE
SV	SOLENOID VALVE
SW	SWITCH
SWBD	SWITCHBOARD
SWGR	SWITCHGEAR
T	THERMOSTAT
TB	TERMINAL BLOCK, TERMINAL BOX
TD	TEMPERATURE DETECTOR, TIME DELAY
TEL	TELEPHONE
TS	THERMOSTAT
TSP	TWISTED SHIELDED PAIR
TST	TWISTED SHIELDED TRIAD
TX	TRANSMITTER
UH	UNIT HEATER
UP	UTILITY POWER
UPS	UNINTERRUPTIBLE POWER SUPPLY
V	VOLTS
VAC	VOLTS ALTERNATING CURRENT
VC	VIDEO CAMERA
VCB	VACUUM CIRCUIT BREAKER
VDC	VOLTS DIRECT CURRENT
VFD	VARIABLE FREQUENCY DRIVE
W	WIRE, WATTS
WP	WEATHER PROOF
XDCR	TRANSDUCER
XFMR	TRANSFORMER
XLP	CROSS LINKED POLYETHYLENE
XP	EXPLOSION PROOF

REVIEWED FOR CODE COMPLIANCE
Thomas W Peterson
12/14/2023
DIVISION OF FACILITIES CONSTRUCTION AND MANAGEMENT
DFCM CODE COMPLIANCE OFFICER

NO.	REVISIONS	BY	DATE
	PUBLISHED		
C	100% DESIGN REVIEW	JT	10/23
B	90% DESIGN REVIEW	JT	9/23
A	50% DESIGN REVIEW	JT	5/23

This document or any part thereof in detail or design concept is the property of Forsgren Associates Inc. and shall not be copied without the written authorization of Forsgren Associates Inc.

DRAWN DJ
DESIGNED MEC
APPROVED
QA MLL

ATTENTION
LINE IS 2-INCHES
AT 24"x36" SIZE
IF NOT 2-INCHES, SCALE DRAWING ACCORDINGLY

PROFESSIONAL ENGINEER No. 9428479-2202 MATHEW LEWIS LAWSON STATE OF UTAH
10/04/2023

FISHERIES EXPERIMENT STATION
UTAH DIVISION OF WILDLIFE RESOURCES
1465 WEST 200 NORTH
LOGAN, UTAH 84321

UTAH DNR WILDLIFE RESOURCES

McMillen

Blue Stakes of UTAH 811 Bluestakes.org

WARN WATER AQUACULTURE BUILDING
LOGAN HATCHERY IMPROVEMENT PROJECT
STANDARD ELECTRICAL ABBREVIATIONS AND DEVICE INDEXES

PROJECT NO: 14-23-0005
SHEET NO: GE001
DATE: 10-2023
PAGE NO: 107

DIAGRAMS

HIGH - MEDIUM VOLTAGE SWITCHING

- POWER CIRCUIT BRK, DRAWOUT
- POWER CIRCUIT BRK, NON-DRAWOUT
- HV ISOLATING SW MOTOR OPERATED
- HV INTERRUPTER SW FUSED
- CENTER-BREAK SW MOTOR OPERATED
- DUAL-BREAK SW MOTOR OPERATED
- LOAD-BREAK SW MOTOR OPERATED
- HORN GAP SW

TRANSFORMERS:

- POWER XFMR
- MAG CORE XFMR
- LOAD TAP CHANGING XFMR
- SPLIT SECONDARY XFMR
- AUTO-XFMR

INSTRUMENT TRANSFORMERS:

- POTENTIAL XFMR
- POTENTIAL XFMR DUAL SECONDARY
- (3) 800:5 — CURRENT XFMR, QTY & RATIO AS INDICATED
- (1) 50:5 — CORE BALANCE CURRENT XFMR RATIO AS INDICATED
- (3) 800:5 — BUSHING CURRENT XFMR, QTY & RATIO AS INDICATED
- kWH — KILOWATT-HOUR METER

MACHINES:

- M / XXHP — MOTOR-DC
- M / XXHP — MOTOR-AC
- G / XXKW XXPF — AC GENERATOR

TRANSFORMERS WINDING CONNECTIONS:

- DELTA 3PH3W
- DELTA CENTER TAP GND 3PH4W
- DELTA CORNER GRD 3PH3W
- BROKEN DELTA 3PH2W
- OPEN DELTA 2PH2W
- WYE 3PH3W
- WYE GRD 3PH4W
- ZIG-ZAG 3PH3W
- ZIG-ZAG GRD 3PH4W

HIGH - MEDIUM VOLTAGE DEVICES

- L/A OR — LIGHTNING ARRESTER
- WT — WAVE TRAP
- M / 57 — GROUND SW MOTOR OPER
- MV CABLE TERMINATION
- CABLE POTHEAD OIL-FILLED

MISC DEVICES & CONNECTIONS:

- IN/OUT LINE
- 01 02 — PROTECTIVE DEVICE ELEMENT, SEE DEVICE FUNCTION INDEX
- TEST SWITCH
- TEST SWITCH, CURRENT SHORTING
- BATTERY
- GROUND
- DISCONNECTING DEVICE
- NEUTRAL CONNECTION
- ISOL PH BUS FLEX CONN
- ISOL PH BUS REMOVEABLE LINK

MISC DEVICES & CONNECTIONS:

- DEVICE TERMINAL POINT
- TERMINAL BLOCK
- EXTERNAL EQUIPMENT INTERCONNECTION
- XX XX — RELAY, SOLENOID, OR CONTACTOR COIL
- TD XX — TRANSDUCER
- I XX — INDICATING METER
- TLM XX — TELEMETRY
- X — PUSH-TO-TEST LIGHT
- X — PILOT/INDIC LIGHT
- XA — FUSE, SIZE AS INDICATED
- FUSE DUMMY
- XA — DISC SW FUSED
- FUSIBLE LINK
- CAPACITOR
- 3% — REACTOR
- RES — RESISTOR
- RES — RESISTOR VARIABLE
- OR — HEATER ELEMENT
- RECTIFIER SOLID STATE
- AC / DC+ / DC- / AC — RECTIFIER FULLWAVE
- DC BRAKE
- GROUND
- CHASSIS GROUND
- CURRENT SHUNT

LOW VOLTAGE SWITCHING:

- DISCONNECTING SWITCH, MANUALLY GANG-OPERATED
- MOLDED CASE OR AIR CIRCUIT BREAKER
- CONTACTOR WITH THERMAL OL TRIP
- CONTACTOR WITH MAGNETIC OL TRIP
- CONTACTOR WITH THERMAL AND MAGNETIC OL TRIP
- E — CIR BKR DRAWOUT ELEC OPER
- E — CIR BKR THERMO O/L DRAWOUT ELEC OPER
- E — CIR BKR MAG O/L DRAWOUT ELEC OPER
- E — CIR BKR THERMO/MAG O/L DRAWOUT ELEC OPER

SELECTOR:

TWO-POSITION X-CONTACT CLOSED

	J	K
A1	X	
A2		X

THREE-POSITION X-CONTACT CLOSED

	J	K	L
A1	X		
A2			X

TWO-POSITION SELECTOR PUSHBUTTON X-CONTACT CLOSED

CONTACTS	SELECTOR POSITION			
	A		B	
	BUTTON		BUTTON	
	FREE	CONTACTS	FREE	CONTACTS
1-2	X			
3-4		X	X	X

CONTROL SWITCHING:

- XX — PB SWITCH NORM OPEN
- XX — PB SWITCH NORM CLOSED
- XX OFF MAN AUTO — SELECTOR SWITCH
- XX — LIMIT SW NORM OPEN
- XX — LIMIT SW NORM CLOSED
- XX — LIMIT SW NORM OPEN HELD CLOSED
- XX — LIMIT SW NORM CLOSED HELD OPEN
- SOLENOID
- XX — CONTACT NORM OPEN
- XX — CONTACT NORM CLOSED
- XX — FLOW OPER NORM OPEN
- XX — FLOW OPER NORM CLOSED
- XX — LEVEL OPER NORM OPEN
- XX — LEVEL OPER NORM CLOSED
- XX — SWITCH NORM OPEN
- XX — SWITCH NORM CLOSED
- XX — TEMP ACT SW NORM OPEN
- XX — TEMP ACT SW NORM CLOSED
- XX — FOOT OPER NORM OPEN
- XX — FOOT OPER NORM CLOSED
- XX — PRESS OPER NORM OPEN
- XX — PRESS OPER NORM CLOSED

MOMENTARY CONTACTS:

- NO / NC — SINGLE CIRCUIT
- NO & NC — DOUBLE CIRCUIT

MAINTAINED CONTACTS:

- TWO SINGLE CIRCUIT
- ONE DOUBLE CIRCUIT
- ESS — E-STOP, 2NC

INSTANT OPERATION CONTACTS WITH BLOWOUT
- XA — NO
- XA — NC

INSTANT OPERATION CONTACTS WITHOUT BLOWOUT
- XA — NO
- XA — NC

TIMED CONTACTS - CONTACT ACTION DELAYED AFTER COIL IS ENERGIZED
- XX SEC — NOTC
- XX SEC — NCTC

TIMED CONTACTS - CONTACT ACTION DELAYED AFTER COIL IS DE-ENERGIZED
- XX SEC — NOTC
- XX SEC — NCTC

SUPPLEMENTARY CONTACTS SYMBOLS:

- SPST, NO SINGLE-BREAK
- SPST, NO DOUBLE-BREAK
- SPST, NC SINGLE-BREAK
- SPST, NC DOUBLE-BREAK
- SPDT, SINGLE-BREAK
- SPDT, DOUBLE-BREAK
- DPST, NO, SINGLE-BREAK
- DPST, NO, DOUBLE-BREAK
- DPST, NC, SINGLE-BREAK
- DPST, NC, DOUBLE-BREAK
- DPDT, SINGLE-BREAK
- DPDT, DOUBLE-BREAK

NOTE:

1. "X" OR "XX" SHOWN ON SYMBOLS WILL BE SUBSTITUTED WITH DEVICE FUNCTION NUMBERS, LETTER SUFFIXES, PILOT LIGHT COLORS, OR OTHER DESCRIPTIVE TEXT, WHICH ARE DEFINED ELSEWHERE IN THESE LEGEND DRAWINGS.

REVIEWED FOR CODE COMPLIANCE
Thomas W Peterson
12/1/2023
DIVISION OF FACILITIES CONSTRUCTION AND MANAGEMENT

DFCM CODE COMPLIANCE OFFICER

NO.	REVISIONS	BY	DATE
	PUBLISHED		
C	100% DESIGN REVIEW	JT	10/23
B	90% DESIGN REVIEW	JT	9/23
A	50% DESIGN REVIEW	JT	5/23

This document or any part thereof in detail or design concept is the property of Forsgren Associates Inc. and shall not be copied without the written authorization of Forsgren Associates Inc.

DRAWN DJ
DESIGNED MEC
APPROVED
QA MLL

ATTENTION
LINE IS 2-INCHES
AT 24"x36" SIZE
IF NOT 2-INCHES, SCALE DRAWING ACCORDINGLY

PROFESSIONAL ENGINEER — No. 9428479-2202 — MATHEW LEWIS LAWSON — STATE OF UTAH
10/04/2023

FISHERIES EXPERIMENT STATION
UTAH DIVISION OF WILDLIFE RESOURCES
1465 WEST 200 NORTH
LOGAN, UTAH 84321

UTAH DNR WILDLIFE RESOURCES

McMillen

Blue Stakes of UTAH 811 Bluestakes.org

WARN WATER AQUACULTURE BUILDING
LOGAN HATCHERY IMPROVEMENT PROJECT

ELECTRICAL STANDARD SYMBOLS 1

PROJECT NO: 14-23-0005
SHEET NO: GE002
DATE: 10-2023
PAGE NO: 108

PRIVATE TELEPHONE SYSTEM

- SB SWITCHBOARD
- TC TERMINAL CABINET
- D DESK PHONE
- W WALL PHONE

PRIVATE ETHERNET NETWORK SYSTEM

- DATA JACK
- VOICE/DATA JACK

PAGE/SOUND SYSTEM

- A AMPLIFIER
- S SPEAKER, WALL MTD
- S SPEAKER, CEIL MTD
- H HORN, WALL MTD
- H HORN, CEIL MTD
- MIC MICROPHONE
- P HANDSET

INTRUSION ALARM/ACCESS SYSTEM

S A — SECURITY ALARM
- A POINT OF CONTACT
- C SECURITY PROXIMITY CARD READER (+48" AFF)
- E SECURITY ELEVATOR LOCKOUT CONTROL
- K SECURITY KEYPAD
- P SECURITY PANIC BUTTON (MOUNT UNDER CABINET)

SC D — SECURITY DOOR CONTACT
- D INTEGRAL TO DOOR HARDWARE OR HINGE. SEE ARCHITECTURAL DOOR HARDWARE SCHEDULE
- S SURFACE MOUNTED CONTACT/MAGNET COMBO WITH TAMPER RESISTANT METAL-CLAD PIGTAIL.
- M FULLY RECESSED CONTACT/MAGNET COMBO INSTALLED IN DOOR FRAME HEADER/TOP OF DOOR.

SL D — SECURITY DOOR LOCK CONNECTION (LOCK BY OTHERS)
- D INTEGRAL TO DOOR HARDWARE OR HINGE. SEE ARCHITECTURAL DOOR HARDWARE SCHEDULE
- S ELECTRICAL STRIKE IN DOOR FRAME LATCH.
- M MAGNETIC LOCK ON DOOR FRAME HEADER.

S M — SECURITY MOTION SENSOR - ARROW INDICATES DIRECTION OF SENSING; 360° INDICATES SENSING IN ALL DIRECTIONS

SM — SECURITY MONITOR AND MULTIPLEXOR/DVM

REX D — REQUEST TO EXIT SIGNAL DEVICE
- D INTEGRAL TO DOOR HARDWARE OR HINGE. SEE ARCHITECTURAL DOOR HARDWARE SCHEDULE
- P PASSIVE INFRARED DETECTOR MOUNTED ABOVE DOOR FRAME. PROVIDE J-BOX TYPE 'B' HORIZONTALLY MOUNTED 6" ABOVE DOOR.

P — POWERED DOOR OPERATOR ACTUATOR

CCTV SYSTEM

- CCTV — CAMERA FIXED POSITION
- PTZ CCTV — CAMERA, PAN-TILT-ZOOM
- CCTV — CCTV MONITOR
- CCTV — CCTV MONITOR

LOW VOLTAGE ELECTRICAL MATERIALS

- CB — CIRCUIT BREAKER SWITCH
- UF — UNFUSED DISCONNECT SWITCH
- F — FUSED DISCONNECT SWITCH
- MOTOR STARTER MANUAL
- MOTOR STARTER MAGNETIC
- CB — MOTOR STARTER MAG. COMBINATION C.B. SW.
- F — MOTOR STARTER MAG. COMBINATION FUSED D.S.
- VFD — VARIABLE FREQUENCY DRIVE
- PUSHBUTTON SW. EMERG. STOP
- PUSHBUTTON SW. STOP/START
- PUSHBUTTON STATION
- SELECTOR SWITCH
- CS — CONTROL STATION
- FS — FLOAT SWITCH
- LI — LEVEL SWITCH
- BI — BIN LEVEL SWITCH
- LS — LIMIT SWITCH
- PS — PRESSURE SWITCH
- PE — ELECTRICAL/PNEUMATIC SWITCH
- PT — PRESSURE TRANSMITTER
- SV — SOLENOID VALVE
- T — THERMOSTAT
- TS — TEMPERATURE SWITCH

- 2 — MOTOR
- POINT OF CONNECTION
- J — JUNCTION BOX OR CONDUIT FITTING

$ — WALL SWITCH
- (1a) NUMBER & LETTER IN PARENTHESES INDICATES PANELBOARD CIRCUIT & SWITCHING ZONE
- 3 THREE WAY
- 4 FOUR WAY
- D DIMMER
- OS OCC SENSOR
- T TIMER
- XP EXPLOSIVE PROOF
- WP WATERPROOF

$M — MOTOR SWITCH
- M MOTOR RATED TOGGLE SWITCH WITHOUT OVERLOADS
- MS MANUAL MOTOR STARTER WITH OVERLOADS

- DS — DAYLIGHT SENSOR
- OS — WALL MOUNTED OCCUPANCY SENSOR
- OS — CEILING MOUNTED OCCUPANCY SENSOR
- PC — PHOTOCELL, SUBSCRIPT INDICATES CIRCUIT

CONVENIENCE RECEPTACLE - DUPLEX
- C CLOCK
- CR CORROSION RESISTANT
- GFI GROUND FAULT INTERRUPTER
- TL TWIST LOCK, NEMA CONFIGURATION AS INDICATED
- U UPS FED
- WP WEATHERPROOF

SUBSCRIPT NUMBER AT RECEPTACLE INDICATES CIRCUIT

- QUADRUPLEX RECEPTACLE
- SINGLE RECEPTACLE
- FLOOR RECEPTACLE
- SPECIAL PURPOSE RECEPTACLE, NEMA CONFIGURATION AS INDICATED

SITE ELECTRICAL

- POLE CONCRETE
- POLE WOOD
- POLE MOUNTED TRANSFORMER
- DOWN GUY
- SIDEWALK GUY
- M — MANHOLE
- H — HANDHOLE
- V — VAULT
- S — PAD MOUNTED SWITCH
- T — TRANSFORMER VAULT
- PAD MOUNTED TRANSFORMER

GROUNDING

- GROUND ROD
- GROUND ROD WITH ACCESS BOX
- GROUND CONNECTION EXOTHERMIC
- GROUND CONNECTION MECHANICAL BOLTED
- GROUND CONNECTION COMPRESSION
- GROUND COIL (PIGTAIL) 5'0" (1.5M)
- GROUND GRADIENT MAT (SAFETY MAT) 4'X 4'
- GROUND GRADIENT MAT (SAFETY MAT) 4'X 6'

ELECTRICAL LIGHTING FIXTURES

- SURFACE/PENDANT LINEAR FIXTURE
- SURFACE/PENDANT LINEAR FIXTURE WITH BATTERY BACKUP
- RECESSED LINEAR FIXTURE
- RECESSED LINEAR FIXTURE WITH BATTERY BACKUP
- DOWNLIGHT FIXTURE SURFACE/PENDANT CEILING MOUNT
- DOWNLIGHT OR SCONCE FIXTURE SURFACE WALL MOUNT
- R — DOWNLIGHT FIXTURE RECESSED CEILING MOUNT
- R — DOWNLIGHT OR SCONCE FIXTURE RECESSED WALL MOUNT
- H — HAZARDOUS AREA LIGHT FIXTURE CEILING MOUNT
- EXIT SIGN, ARROW INDICATES DIRECTION SURFACE/PENDANT CEILING MOUNT, FILLED QUARTER INDICATES NON-INDICATING FACE
- EXIT SIGN, ARROW INDICATES DIRECTION SURFACE WALL MOUNT, FILLED QUARTER INDICATES NON-INDICATING FACE
- R — EXIT SIGN, ARROW INDICATES DIRECTION RECESSED WALL MOUNT, FILLED QUARTER INDICATES NON-INDICATING FACE

- EMERGENCY DOWNLIGHT FIXTURE SURFACE/PENDANT CEILING MOUNT
- EMERGENCY DOWNLIGHT OR SCONCE FIXTURE SURFACE WALL MOUNT
- R — EMERGENCY DOWNLIGHT FIXTURE RECESSED CEILING MOUNT
- R — EMERGENCY DOWNLIGHT OR SCONCE FIXTURE RECESSED WALL MOUNT
- EMERGENCY LIGHTING UNIT, 1 HEAD
- EMERGENCY LIGHTING UNIT, 2 HEAD
- EMERGENCY LIGHTING UNIT, 3 HEAD
- SURFACE MTD. DISTR. PANELBOARD
- FLUSH MTD. DISTR. PANELBOARD
- LF-1 — LF-1 — POLE-MOUNTED AREA LIGHT, NUMBER OF FIXTURES AND CONFIGURATION AS SHOWN AND PER SCHEDULE
- A (2a) — LETTER NEXT TO LUMINAIRE INDICATES TYPE PER SCHEDULE. NUMBER AND LOWER CASE LETTER IN PARENTHESES INDICATES CIRCUIT AND SWITCHING ZONE IN PANELBOARD.

PLAN LINETYPES AND CONVENTIONS

- EXPOSED CONDUCTOR/CONDUIT
- CONCEALED/EMBEDDED CONDUCTOR/CONDUIT
- CONDUCTOR/CONDUIT DOWN
- CONDUCTOR/CONDUIT UP
- G — GROUNDING ELECTRODE CONDUCTOR, BARE COPPER
- G — GROUND CONNECTION, EXOTHERMIC OR WELDED
- G — GROUND CONNECTION, BOLTED
- EOH — OH POWER
- EUG — UG POWER
- [3/4"C, 3#12, 1#12G] — CIRCUIT CALLOUT, CONDUIT AND CONDUCTOR SIZES AS INDICATED; "n-" IN FRONT OF CALLOUT INDICATES "n" PARALLEL SETS
- RXX — RACEWAY CALLOUT, INDEX NUMBER AS INDICATED IN RACEWAY SCHEDULE

DIAGRAM LINETYPES AND CONVENTIONS

- ENCLOSURE
- CONDUCTOR, CABLE, CIRCUIT, OR BUS
- INTERCONNECTION WITH EXTERNAL EQUIPMENT
- GANG OPERATED INTERLOCK
- OR — CONDUCTOR, CROSSING OF PATHS OR CONDUCTORS NOT CONNECTED
- CONDUCTOR, JUNCTION OF CONNECTED PATHS, CONDUCTORS OR WIRES

REVIEWED FOR CODE COMPLIANCE
Thomas W Peterson
12/1/2023
DIVISION OF FACILITIES CONSTRUCTION AND MANAGEMENT
DFCM CODE COMPLIANCE OFFICER

NO.	REVISIONS	BY	DATE
	PUBLISHED		
C	100% DESIGN REVIEW	JT	10/23
B	90% DESIGN REVIEW	JT	9/23
A	50% DESIGN REVIEW	JT	5/23

This document or any part thereof in detail or design concept is the property of Forsgren Associates Inc. and shall not be copied without the written authorization of Forsgren Associates Inc.

DRAWN DJ
DESIGNED MEC
APPROVED
QA MLL

ATTENTION
LINE IS 2-INCHES
AT 24"x36" SIZE
IF NOT 2-INCHES, SCALE DRAWING ACCORDINGLY

PROFESSIONAL ENGINEER — No. 9428479-2202 — MATHEW LEWIS LAWSON — STATE OF UTAH
10/04/2023

FISHERIES EXPERIMENT STATION
UTAH DIVISION OF WILDLIFE RESOURCES
1465 WEST 200 NORTH
LOGAN, UTAH 84321

UTAH DNR WILDLIFE RESOURCES

McMillen

Blue Stakes of UTAH 811 — Bluestakes.org

WARN WATER AQUACULTURE BUILDING
LOGAN HATCHERY IMPROVEMENT PROJECT
ELECTRICAL STANDARD SYMBOLS 2

PROJECT NO: 14-23-0005
SHEET NO: GE003
DATE: 10-2023
PAGE NO: 109

DEVICE ID	DESCRIPTION	VOLTAGE	CURRENT	HP	KW/KVA	SPECIFICATION	NOTES
P-101	VFD - PUMP - MODULE 1 RAS	480 VAC - 3 PH		3		26 29 23	LOCATED IN LCP-101
P-102	VFD - PUMP - MODULE 1 RAS	480 VAC - 3 PH		3		26 29 23	LOCATED IN LCP-101
P-103	VFD - PUMP - MODULE 1 RAS	480 VAC - 3 PH		3		26 29 23	LOCATED IN LCP-101
P-201	VFD - PUMP - MODULE 2 RAS	480 VAC - 3 PH		3		26 29 23	LOCATED IN LCP-201
P-202	VFD - PUMP - MODULE 2 RAS	480 VAC - 3 PH		3		26 29 23	LOCATED IN LCP-201
P-203	VFD - PUMP - MODULE 2 RAS	480 VAC - 3 PH		3		26 29 23	LOCATED IN LCP-201
P-301	VFD - PUMP - MODULE 3 RAS	480 VAC - 3 PH		7.5		26 29 23	LOCATED IN LCP-301
P-302	VFD - PUMP - MODULE 3 RAS	480 VAC - 3 PH		7.5		26 29 23	LOCATED IN LCP-301
P-303	VFD - PUMP - MODULE 3 RAS	480 VAC - 3 PH		7.5		26 29 23	LOCATED IN LCP-301
FM-101	FLOW METER - MODULE 1 PUMP OUTPUT	120 VAC - 1 PH	1A			40 91 23	
FM-102	FLOW METER - MODULE 1 RAS SUPPLY RETURN	120 VAC - 1 PH	1A			40 91 23	
FM-103	FLOW METER - MODULE 1 MAKEUP	120 VAC - 1 PH	1A			40 91 23	
FM-201	FLOW METER - MODULE 2 PUMP OUTPUT	120 VAC - 1 PH	1A			40 91 23	
FM-202	FLOW METER - MODULE 2 RAS SUPPLY RETURN	120 VAC - 1 PH	1A			40 91 23	
FM-203	FLOW METER - MODULE 2 MAKEUP	120 VAC - 1 PH	1A			40 91 23	
FM-301	FLOW METER - MODULE 3 PUMP OUTPUT	120 VAC - 1 PH	1A			40 91 23	
FM-302	FLOW METER - MODULE 3 RAS SUPPLY RETURN	120 VAC - 1 PH	1A			40 91 23	
FM-303	FLOW METER - MODULE 3 MAKEUP	120 VAC - 1 PH	1A			40 91 23	
FM-401	FLOW METER - INCUBATION CHILLED WATER	120 VAC - 1 PH	1A			40 91 23	
FM-402	FLOW METER - INCUBATION COLD WATER	120 VAC - 1 PH	1A			40 91 23	
FM-403	FLOW METER - INCUBATION WARM WATER	120 VAC - 1 PH	1A			40 91 23	
DF-101	DRUM FILTER - MODULE 1 RAS SYSTEM	480 VAC - 3 PH		2		46 61 43	
DF-201	DRUM FILTER - MODULE 2 RAS SYSTEM	480 VAC - 3 PH		2		46 61 43	
DF-301	DRUM FILTER - MODULE 3 RAS SYSTEM	480 VAC - 3 PH		2		46 61 43	
UV-101	UV TREATMENT - MODULE 1	240 VAC - 1 PH			3.5	46 61 43	
UV-201	UV TREATMENT - MODULE 2	240 VAC - 1 PH			3.5	46 61 43	
UV-301	UV TREATMENT - MODULE 3	240 VAC - 1 PH			5.3	46 61 43	
MASTER PLC	MASTER PLC ENCLOSURE AND CONTROLS EQUIPMENT	120 VAC - 1 PH				27 26 00	1 - 15 AMP CIRCUIT AND 1 - 15 AMP RECEPT
RIO ENCLOSURE	REMOTE I/O ENCLOSURE AND CONTROLS EQUIPMENT	120 VAC - 1 PH				27 26 00	1 - 15 AMP CIRCUIT AND 1 - 15 AMP RECEPT
LCP-101	LOCAL CONTROL PANEL - MODULE 1 RAS PUMPS	120 VAC - 1 PH			0.4	40 90 05	1 - 15 AMP CIRCUIT
LCP-201	LOCAL CONTROL PANEL - MODULE 2 RAS PUMPS	120 VAC - 1 PH			0.4	40 90 05	1 - 15 AMP CIRCUIT
LCP-301	LOCAL CONTROL PANEL - MODULE 3 RAS PUMPS	120 VAC - 1 PH			0.4	40 90 05	1 - 15 AMP CIRCUIT
B-101	BOILER, GAS, MODULE 1 RAS SYSTEM	120 VAC - 1 PH	12A				
B-201	BOILER, GAS, MODULE 2 RAS SYSTEM	120 VAC - 1 PH	12A				
B-301	BOILER, GAS, MODULE 3 RAS SYSTEM	120 VAC - 1 PH	12A				
B-302	BOILER, GAS, MODULE 3 RAS SYSTEM	120 VAC - 1 PH	12A				
CH-401	CHILLER, INCUBATION	480 VAC - 3 PH	27A			40 95 01	RLA: 27A, LRA:75A, MCA:26, MAX CB: 35A
CH-401	CHILLER, INCUBATION	480 VAC - 3 PH	27A			40 95 01	RLA: 27A, LRA:75A, MCA:26, MAX CB: 35A
DISC-101	DISCONNECT, P-101, MODULE 1	480 VAC - 3 PH				26 28 16	
DISC-102	DISCONNECT, P-102, MODULE 1	480 VAC - 3 PH				26 28 16	
DISC-103	DISCONNECT, P-103, MODULE 1	480 VAC - 3 PH				26 28 16	
DISC-201	DISCONNECT, P-201, MODULE 2	480 VAC - 3 PH				26 28 16	
DISC-202	DISCONNECT, P-202, MODULE 2	480 VAC - 3 PH				26 28 16	
DISC-203	DISCONNECT, P-203, MODULE 2	480 VAC - 3 PH				26 28 16	
DISC-301	DISCONNECT, P-301, MODULE 3	480 VAC - 3 PH				26 28 16	
DISC-302	DISCONNECT, P-302, MODULE 3	480 VAC - 3 PH				26 28 16	
DISC-303	DISCONNECT, P-303, MODULE 3	480 VAC - 3 PH				26 28 16	
BL-101	BLOWER, LOW HEAD OXYGENATOR, MODULE 1	480 VAC - 3PH		1		43 10 23	
BL-201	BLOWER, LOW HEAD OXYGENATOR, MODULE 2	480 VAC - 3PH		1		43 10 23	
BL-301	BLOWER, LOW HEAD OXYGENATOR, MODULE 3	480 VAC - 3PH		1		43 10 23	
BL-401	BLOWER, LOW HEAD OXYGENATOR, INCUBATION	480 VAC - 3PH		1		43 10 23	
P-401	WARM WATER BOOSTER PUMP SKID	208 VAC - 3PH		(3) 7.5		-	
V-167	FLOW CONTROL VALVE, MAKE UP WATER, MODULE 1	120 VAC - 1PH			1		
V-267	FLOW CONTROL VALVE, MAKE UP WATER, MODULE 2	120 VAC - 1PH			1		
V-389	FLOW CONTROL VALVE, MAKE UP WATER, MODULE 3	120 VAC - 1PH			1		

REVIEWED FOR CODE COMPLIANCE
Thomas W Peterson
12/14/2023
DIVISION OF FACILITIES CONSTRUCTION AND MANAGEMENT

DFCM CODE COMPLIANCE OFFICER

NO.	REVISIONS	BY	DATE
C	100% DESIGN REVIEW	JT	10/23
B	90% DESIGN REVIEW	JT	9/23
A	50% DESIGN REVIEW	JT	5/23

PUBLISHED

This document or any part thereof in detail or design concept is the property of Forsgren Associates Inc. and shall not be copied without the written authorization of Forsgren Associates Inc.

DRAWN DJ
DESIGNED MEC
APPROVED
QA MLL

ATTENTION
LINE IS 2-INCHES
AT 24"x36" SIZE
IF NOT 2-INCHES, SCALE DRAWING ACCORDINGLY

PROFESSIONAL ENGINEER
No. 9428479-2202
MATHEW LEWIS LAWSON
STATE OF UTAH
10/04/2023

FISHERIES EXPERIMENT STATION
UTAH DIVISION OF WILDLIFE RESOURCES
1465 WEST 200 NORTH
LOGAN, UTAH 84321

UTAH DNR WILDLIFE RESOURCES

McMillen

Blue Stakes of UTAH 811 bluestakes.org

WARN WATER AQUACULTURE BUILDING
LOGAN HATCHERY IMPROVEMENT PROJECT

ELECTRICAL EQUIPMENT SCHEDULE

PROJECT NO: 14-23-0005
SHEET NO: GE004
DATE: 10-2023
PAGE NO: 110

LUMINAIRE SCHEDULE								
TYPE	DESCRIPTION	MANUFACTURER	CATALOG NUMBER	LAMP TYPE	LAMP WATTS	VOLTAGE	MOUNTING	NOTES
SF1	INDUSTRIAL 8' STRIP	LITHONIA	FEM-L96-24000LM-LPACL-WD-MVOLT-GZ10-50K-90CRI	LED	150	120/277	SURFACE / SUSPENDED	0-10V DIMMABLE CONTROL
SF2	INDUSTRIAL 4' STRIP	LITHONIA	FEM-L48-12000LM-LPACL-MD-MVOLT-GZ10-50K-90CRI	LED	75	120/277	SURFACE / SUSPENDED	FOR BRINE SHRIMP CLOSET, 0-10V DIMMABLE CONTROL
SF3	WALLEYE TANK LIGHT	ONCE	MLA-WH-HW-180-014-120	LED	14	120	SURFACE / SUSPENDED	MOUNTED ABOVE WALLEYE TANKS (MODULE 3), BENEATH CABLE TRAY, WITH INDIVIDUAL PHASE/AMPLITUDE DIMMABLE CONTROL
SF4	STRIPED BASS TANK LIGHT	LITHONIA	JEBL-24L-50K-80CRI-WH	LED	174	120/277	SURFACE / SUSPENDED	MOUNTED ABOVE STRIPED BASS TANKS (MODULE 1 & 2), BENEATH CABLE TRAY, WITH INDIVIDUAL 0-10V DIMMABLE CONTROL

REVIEWED FOR CODE COMPLIANCE
Thomas W Peterson
12/14/2023
DIVISION OF FACILITIES CONSTRUCTION AND MANAGEMENT

DFCM CODE COMPLIANCE OFFICER

NO.	REVISIONS	BY	DATE
	PUBLISHED		
C	100% DESIGN REVIEW	JT	10/23
B	90% DESIGN REVIEW	JT	9/23
A	50% DESIGN REVIEW	JT	5/23

This document or any part thereof in detail or design concept is the property of Forsgren Associates Inc. and shall not be copied without the written authorization of Forsgren Associates Inc.

DRAWN DJ
DESIGNED MEC
APPROVED
QA MLL

ATTENTION
LINE IS 2-INCHES
AT 24"x36" SIZE
IF NOT 2-INCHES, SCALE DRAWING ACCORDINGLY

PROFESSIONAL ENGINEER
No. 9428479-2202
MATHEW LEWIS LAWSON
STATE OF UTAH
10/04/2023

FISHERIES EXPERIMENT STATION
UTAH DIVISION OF WILDLIFE RESOURCES
1465 WEST 200 NORTH
LOGAN, UTAH 84321

UTAH DNR WILDLIFE RESOURCES

McMillen

Blue Stakes of UTAH 811 Bluestakes.org

WARN WATER AQUACULTURE BUILDING
LOGAN HATCHERY IMPROVEMENT PROJECT

LUMINAIRE SCHEDULE

PROJECT NO: 14-23-0005
SHEET NO: GE005
DATE: 10-2023
PAGE NO: 111

TAG NUMBER	DESCRIPTION	PHYSICAL LOCATION	FIELD POWER VIA	SPEC NO	INPUT / OUTPUT	APPLICATION NOTES
FLOW MONITORING						
FM-101	MODULE 1 PUMP OUTPUT	MODULE 1 RAS	120VAC	40 91 23	AI	4-20mA SIGNAL / MODBUS
FM-102	MODULE 1 RAS RETURN	MODULE 1 RAS	120VAC	40 91 23	AI	4-20mA SIGNAL / MODBUS
FM-103	MODULE 1 MAKEUP	MODULE 1 RAS	120VAC	40 91 23	AI	4-20mA SIGNAL / MODBUS
FM-201	MODULE 2 PUMP OUTPUT	MODULE 2 RAS	120VAC	40 91 23	AI	4-20mA SIGNAL / MODBUS
FM-202	MODULE 2 RAS RETURN	MODULE 2 RAS	120VAC	40 91 23	AI	4-20mA SIGNAL / MODBUS
FM-203	MODULE 2 MAKEUP	MODULE 2 RAS	120VAC	40 91 23	AI	4-20mA SIGNAL / MODBUS
FM-301	MODULE 3 PUMP OUTPUT	MODULE 3 RAS	120VAC	40 91 23	AI	4-20mA SIGNAL / MODBUS
FM-302	MODULE 3 RAS RETURN	MODULE 3 RAS	120VAC	40 91 23	AI	4-20mA SIGNAL / MODBUS
FM-303	MODULE 3 MAKEUP	MODULE 3 RAS	120VAC	40 91 23	AI	4-20mA SIGNAL / MODBUS
FM-401	INCUBATION CHILLED	INCUBATION	120VAC	40 91 23	AI	4-20mA SIGNAL / MODBUS
FM-402	INCUBATION COLD	INCUBATION	120VAC	40 91 23	AI	4-20mA SIGNAL / MODBUS
FM-403	INCUBATION WARM	INCUBATION	120VAC	40 91 23	AI	4-20mA SIGNAL / MODBUS
LEVEL MONITORING						
LS-101	MODULE 1, TANK 1 LEVEL	MODULE 1		40 90 08	DI	LEVEL SWITCH
LS-102	MODULE 1, TANK 2 LEVEL	MODULE 1		40 90 08	DI	LEVEL SWITCH
LS-103	MODULE 1, TANK 3 LEVEL	MODULE 1		40 90 08	DI	LEVEL SWITCH
LS-104	MODULE 1, TANK 4 LEVEL	MODULE 1		40 90 08	DI	LEVEL SWITCH
LS-105	MODULE 1, TANK 5 LEVEL	MODULE 1		40 90 08	DI	LEVEL SWITCH
LS-106	MODULE 1, TANK 6 LEVEL	MODULE 1		40 90 08	DI	LEVEL SWITCH
LS-107	MODULE 1, TANK 7 LEVEL	MODULE 1		40 90 08	DI	LEVEL SWITCH
LS-108	MODULE 1, TANK 8 LEVEL	MODULE 1		40 90 08	DI	LEVEL SWITCH
LS-150	MODULE 1 RAS LHO LEVEL	MODULE 1 RAS		40 90 08	DI	LEVEL SWITCH
LS-201	MODULE 2, TANK 1 LEVEL	MODULE 2		40 90 08	DI	LEVEL SWITCH
LS-202	MODULE 2, TANK 2 LEVEL	MODULE 2		40 90 08	DI	LEVEL SWITCH
LS-203	MODULE 2, TANK 3 LEVEL	MODULE 2		40 90 08	DI	LEVEL SWITCH
LS-204	MODULE 2, TANK 4 LEVEL	MODULE 2		40 90 08	DI	LEVEL SWITCH
LS-205	MODULE 2, TANK 5 LEVEL	MODULE 2		40 90 08	DI	LEVEL SWITCH
LS-206	MODULE 2, TANK 6 LEVEL	MODULE 2		40 90 08	DI	LEVEL SWITCH
LS-207	MODULE 2, TANK 7 LEVEL	MODULE 2		40 90 08	DI	LEVEL SWITCH
LS-208	MODULE 2, TANK 8 LEVEL	MODULE 2		40 90 08	DI	LEVEL SWITCH
LS-250	MODULE 2 RAS LHO LEVEL	MODULE 2 RAS		40 90 08	DI	LEVEL SWITCH
LS-301	MODULE 3, TANK 1 LEVEL	MODULE 3		40 90 08	DI	LEVEL SWITCH
LS-302	MODULE 3, TANK 2 LEVEL	MODULE 3		40 90 08	DI	LEVEL SWITCH
LS-303	MODULE 3, TANK 3 LEVEL	MODULE 3		40 90 08	DI	LEVEL SWITCH
LS-304	MODULE 3, TANK 4 LEVEL	MODULE 3		40 90 08	DI	LEVEL SWITCH
LS-305	MODULE 3, TANK 5 LEVEL	MODULE 3		40 90 08	DI	LEVEL SWITCH
LS-306	MODULE 3, TANK 6 LEVEL	MODULE 3		40 90 08	DI	LEVEL SWITCH
LS-307	MODULE 3, TANK 7 LEVEL	MODULE 3		40 90 08	DI	LEVEL SWITCH
LS-308	MODULE 3, TANK 8 LEVEL	MODULE 3		40 90 08	DI	LEVEL SWITCH
LS-309	MODULE 3, TANK 9 LEVEL	MODULE 3		40 90 08	DI	LEVEL SWITCH
LS-310	MODULE 3, TANK 10 LEVEL	MODULE 3		40 90 08	DI	LEVEL SWITCH
LS-311	MODULE 3, TANK 11 LEVEL	MODULE 3		40 90 08	DI	LEVEL SWITCH
LS-350	MODULE 3 RAS LHO LEVEL	MODULE 3 RAS		40 90 08	DI	LEVEL SWITCH
LS-450	INCUBATION LHO LEVEL	INCUBATION		40 90 08	DI	LEVEL SWITCH
WATER QUALITY						
UT-101	MODULE 1, DO/TEMP	MODULE 1 RAS			(2) AI	4-20MA SIGNAL
UT-201	MODULE 2, DO/TEMP	MODULE 2 RAS			(2) AI	4-20MA SIGNAL
UT-301	MODULE 3, DO/TEMP	MODULE 3 RAS			(2) AI	4-20MA SIGNAL
UT-401	INCUBATION, DO/TEMP	INCUBATION			(2) AI	4-20MA SIGNAL
FLOW CONTROL						
V-167	MAKEUP WATER VALVE	MODULE 1 RAS	120VAC	43 25 01		MODBUS
V-267	MAKEUP WATER VALVE	MODULE 2 RAS	120VAC	43 25 01		MODBUS
V-389	MAKEUP WATER VALVE	MODULE 3 RAS	120VAC	43 25 01		MODBUS

TAG NUMBER	DESCRIPTION	PHYSICAL LOCATION	FIELD POWER VIA	SPEC NO	INPUT / OUTPUT	APPLICATION NOTES
TANK FLOW MONITORING						
FS-101	FLOW SWITCH, TANK T-101	MODULE 1		40 90 04	DI	
FS-102	FLOW SWITCH, TANK T-102	MODULE 1		40 90 04	DI	
FS-103	FLOW SWITCH, TANK T-103	MODULE 1		40 90 04	DI	
FS-104	FLOW SWITCH, TANK T-104	MODULE 1		40 90 04	DI	
FS-105	FLOW SWITCH, TANK T-105	MODULE 1		40 90 04	DI	
FS-106	FLOW SWITCH, TANK T-106	MODULE 1		40 90 04	DI	
FS-107	FLOW SWITCH, TANK T-107	MODULE 1		40 90 04	DI	
FS-108	FLOW SWITCH, TANK T-108	MODULE 1		40 90 04	DI	
FS-201	FLOW SWITCH, TANK T-201	MODULE 2		40 90 04	DI	
FS-202	FLOW SWITCH, TANK T-202	MODULE 2		40 90 04	DI	
FS-203	FLOW SWITCH, TANK T-203	MODULE 2		40 90 04	DI	
FS-204	FLOW SWITCH, TANK T-204	MODULE 2		40 90 04	DI	
FS-205	FLOW SWITCH, TANK T-205	MODULE 2		40 90 04	DI	
FS-206	FLOW SWITCH, TANK T-206	MODULE 2		40 90 04	DI	
FS-207	FLOW SWITCH, TANK T-207	MODULE 2		40 90 04	DI	
FS-208	FLOW SWITCH, TANK T-208	MODULE 2		40 90 04	DI	
FS-301	FLOW SWITCH, TANK T-301	MODULE 3		40 90 04	DI	
FS-302	FLOW SWITCH, TANK T-302	MODULE 3		40 90 04	DI	
FS-303	FLOW SWITCH, TANK T-303	MODULE 3		40 90 04	DI	
FS-304	FLOW SWITCH, TANK T-304	MODULE 3		40 90 04	DI	
FS-305	FLOW SWITCH, TANK T-305	MODULE 3		40 90 04	DI	
FS-306	FLOW SWITCH, TANK T-306	MODULE 3		40 90 04	DI	
FS-307	FLOW SWITCH, TANK T-307	MODULE 3		40 90 04	DI	
FS-308	FLOW SWITCH, TANK T-308	MODULE 3		40 90 04	DI	
FS-309	FLOW SWITCH, TANK T-309	MODULE 3		40 90 04	DI	
FS-310	FLOW SWITCH, TANK T-310	MODULE 3		40 90 04	DI	
FS-311	FLOW SWITCH, TANK T-311	MODULE 3		40 90 04	DI	

REVIEWED FOR CODE COMPLIANCE
Thomas W Peterson
12/14/2023
DIVISION OF FACILITIES CONSTRUCTION AND MANAGEMENT
DFCM CODE COMPLIANCE OFFICER

PUBLISHED			
C	100% DESIGN REVIEW	JT	10/23
B	90% DESIGN REVIEW	JT	9/23
A	50% DESIGN REVIEW	JT	5/23
NO.	REVISIONS	BY	DATE

This document or any part thereof in detail or design concept is the property of Forsgren Associates Inc. and shall not be copied without the written authorization of Forsgren Associates Inc.

DRAWN DJ
DESIGNED MEC
APPROVED
QA MLL

ATTENTION
LINE IS 2-INCHES
AT 24"x36" SIZE
IF NOT 2-INCHES, SCALE DRAWING ACCORDINGLY

PROFESSIONAL ENGINEER
No. 9428479-2202
MATHEW LEWIS LAWSON
STATE OF UTAH
10/04/2023

FISHERIES EXPERIMENT STATION
UTAH DIVISION OF WILDLIFE RESOURCES
1465 WEST 200 NORTH
LOGAN, UTAH 84321

UTAH DNR WILDLIFE RESOURCES

McMillen

Blue Stakes of UTAH 811 Bluestakes.org

WARN WATER AQUACULTURE BUILDING
LOGAN HATCHERY IMPROVEMENT PROJECT
INSTRUMENTATION LIST

PROJECT NO: 14-23-0005
SHEET NO: GE006
DATE: 10-2023
PAGE NO: 112

ID#	SIZE	TYPE	FROM	TO	K	COMMENTS
C-001	#12 3CC, #12 GND	POWER XLPE	PANEL L1	PUMP P-301 VFD		VFD LOCATED IN LCP-301, CABLE TRAY RATED
C-002	#12 3CC, #12 GND	POWER XLPE	PANEL L1	PUMP P-302 VFD		VFD LOCATED IN LCP-301, CABLE TRAY RATED
C-003	#12 3CC, #12 GND	POWER XLPE	PANEL L1	PUMP P-303 VFD		VFD LOCATED IN LCP-301, CABLE TRAY RATED
C-004	#12 3CC, #12 GND	POWER XLPE	PUMP P-301 VFD	PUMP DISCONNECT DISC-301	1	VFD LOCATED IN LCP-301
C-005	#12 3CC, #12 GND	POWER XLPE	PUMP P-302 VFD	PUMP DISCONNECT DISC-302	3	VFD LOCATED IN LCP-301
C-006	#12 3CC, #12 GND	POWER XLPE	PUMP P-303 VFD	PUMP DISCONNECT DISC-303	5	VFD LOCATED IN LCP-301
C-007	#12 3CC, #12 GND	POWER XLPE	PUMP DISCONNECT DISC-301	PUMP P-301	2	
C-008	#12 3CC, #12 GND	POWER XLPE	PUMP DISCONNECT DISC-302	PUMP P-302	4	
C-009	#12 3CC, #12 GND	POWER XLPE	PUMP DISCONNECT DISC-303	PUMP P-303	6	
C-010	#12 3CC, #12 GND	POWER XLPE	PANEL L2	PUMP P-101 VFD		VFD LOCATED IN LCP-101, CABLE TRAY RATED
C-011	#12 3CC, #12 GND	POWER XLPE	PANEL L2	PUMP P-102 VFD		VFD LOCATED IN LCP-101, CABLE TRAY RATED
C-012	#12 3CC, #12 GND	POWER XLPE	PANEL L2	PUMP P-103 VFD		VFD LOCATED IN LCP-101, CABLE TRAY RATED
C-013	#12 3CC, #12 GND	POWER XLPE	PUMP P-101 VFD	PUMP DISCONNECT DISC-101	7	VFD LOCATED IN LCP-101
C-014	#12 3CC, #12 GND	POWER XLPE	PUMP P-102 VFD	PUMP DISCONNECT DISC-102	9	VFD LOCATED IN LCP-101
C-015	#12 3CC, #12 GND	POWER XLPE	PUMP P-103 VFD	PUMP DISCONNECT DISC-103	11	VFD LOCATED IN LCP-101
C-016	#12 3CC, #12 GND	POWER XLPE	PUMP DISCONNECT DISC-101	PUMP P-101	8	
C-017	#12 3CC, #12 GND	POWER XLPE	PUMP DISCONNECT DISC-102	PUMP P-102	10	
C-018	#12 3CC, #12 GND	POWER XLPE	PUMP DISCONNECT DISC-103	PUMP P-103	12	
C-019	#12 3CC, #12 GND	POWER XLPE	PANEL L2	PUMP P-201 VFD		VFD LOCATED IN LCP-201, CABLE TRAY RATED
C-020	#12 3CC, #12 GND	POWER XLPE	PANEL L2	PUMP P-202 VFD		VFD LOCATED IN LCP-201, CABLE TRAY RATED
C-021	#12 3CC, #12 GND	POWER XLPE	PANEL L2	PUMP P-203 VFD		VFD LOCATED IN LCP-201, CABLE TRAY RATED
C-022	#12 3CC, #12 GND	POWER XLPE	PUMP P-201 VFD	PUMP DISCONNECT DISC-201	13	VFD LOCATED IN LCP-201
C-023	#12 3CC, #12 GND	POWER XLPE	PUMP P-202 VFD	PUMP DISCONNECT DISC-202	15	VFD LOCATED IN LCP-201
C-024	#12 3CC, #12 GND	POWER XLPE	PUMP P-203 VFD	PUMP DISCONNECT DISC-203	17	VFD LOCATED IN LCP-201
C-025	#12 3CC, #12 GND	POWER XLPE	PUMP DISCONNECT DISC-201	PUMP P-201	14	
C-026	#12 3CC, #12 GND	POWER XLPE	PUMP DISCONNECT DISC-202	PUMP P-202	16	
C-027	#12 3CC, #12 GND	POWER XLPE	PUMP DISCONNECT DISC-203	PUMP P-203	18	
C-028	#12 3CC, #12 GND	POWER XLPE	PANEL L1	DRUM FILTER DF-301		CABLE TRAY RATED
C-029	#12 3CC, #12 GND	POWER XLPE	PANEL L2	DRUM FILTER DF-101		CABLE TRAY RATED
C-030	#12 3CC, #12 GND	POWER XLPE	PANEL L2	DRUM FILTER DF-201		CABLE TRAY RATED
C-031	#8 3CC, #12 GND	POWER XLPE	PANEL L1	CHILLER CH-401		CABLE TRAY RATED
C-032	#8 3CC, #12 GND	POWER XLPE	PANEL L2	CHILLER CH-402		CABLE TRAY RATED
C-033	#10 2CC, #10 GND	POWER XLPE	PANEL P3	UV-301	19	CABLE TRAY RATED
C-034	#12 2CC, #12 GND	POWER XLPE	PANEL P3	UV-101		CABLE TRAY RATED
C-035	#12 2CC, #12 GND	POWER XLPE	PANEL P3	UV-201		CABLE TRAY RATED
C-036	#12 2CC, #12 GND	POWER XLPE	PANEL P1	BLOWER, LHO-301		CABLE TRAY RATED
C-037	#12 2CC, #12 GND	POWER XLPE	PANEL P1	BLOWER, LHO-401		CABLE TRAY RATED
C-038	#12 2CC, #12 GND	POWER XLPE	PANEL P2	BLOWER, LHO-101		CABLE TRAY RATED
C-039	#12 2CC, #12 GND	POWER XLPE	PANEL P2	BLOWER, LHO-201		CABLE TRAY RATED
C-040	#12 2CC, #12 GND	POWER XLPE	PANEL P1	FLOW METER, FM-301		CABLE TRAY RATED
C-041	#12 2CC, #12 GND	POWER XLPE	PANEL P1	FLOW METER, FM-302		CABLE TRAY RATED
C-042	#12 2CC, #12 GND	POWER XLPE	PANEL P1	FLOW METER, FM-303		CABLE TRAY RATED
C-043	#12 2CC, #12 GND	POWER XLPE	PANEL P1	FLOW METER, FM-401		CABLE TRAY RATED
C-044	#12 2CC, #12 GND	POWER XLPE	PANEL P1	FLOW METER, FM-402		CABLE TRAY RATED
C-045	#12 2CC, #12 GND	POWER XLPE	PANEL P1	FLOW METER, FM-403		CABLE TRAY RATED
C-046	#12 2CC, #12 GND	POWER XLPE	PANEL P2	FLOW METER, FM-101		CABLE TRAY RATED
C-047	#12 2CC, #12 GND	POWER XLPE	PANEL P2	FLOW METER, FM-102		CABLE TRAY RATED
C-048	#12 2CC, #12 GND	POWER XLPE	PANEL P2	FLOW METER, FM-103		CABLE TRAY RATED
C-049	#12 2CC, #12 GND	POWER XLPE	PANEL P2	FLOW METER, FM-201		CABLE TRAY RATED
C-050	#12 2CC, #12 GND	POWER XLPE	PANEL P2	FLOW METER, FM-202		CABLE TRAY RATED
C-051	#12 2CC, #12 GND	POWER XLPE	PANEL P2	FLOW METER, FM-203		CABLE TRAY RATED
C-052	#12 2CC, #12 GND	POWER XLPE	PANEL P1	MASTER PLC ENCLOSURE		CABLE TRAY RATED
C-053	#12 2CC, #12 GND	POWER XLPE	PANEL P2	RIO ENCLOSURE		CABLE TRAY RATED
C-054	#12 2CC, #12 GND	POWER XLPE	PANEL P1	PUMP CONTROL PANEL, LCP-301		CABLE TRAY RATED
C-055	#12 2CC, #12 GND	POWER XLPE	PANEL P2	PUMP CONTROL PANEL, LCP-101		CABLE TRAY RATED
C-056	#12 2CC, #12 GND	POWER XLPE	PANEL P2	PUMP CONTROL PANEL, LCP-102		CABLE TRAY RATED
C-057	#12 2CC, #12 GND	POWER XLPE	PANEL P1	BOILER, B-301		CABLE TRAY RATED
C-058	#12 2CC, #12 GND	POWER XLPE	PANEL P1	BOILER, B-302		CABLE TRAY RATED
C-059	#12 2CC, #12 GND	POWER XLPE	PANEL P2	BOILER, B-101		CABLE TRAY RATED
C-060	#3 3CC, #8 GND	POWER XLPE	PANEL P2	BOILER, B-201		CABLE TRAY RATED
C-061	#12 3CC, #12 GND	POWER XLPE	PANEL P2	WW BOOSTER PUMP SKID		CABLE TRAY RATED
C-062	#12 3CC, #12 GND	POWER XLPE	PANEL P1	MODULE 3 TANK JB-1		CABLE TRAY RATED, SELF CLEANING TANK POWER
C-063	#12 3CC, #12 GND	POWER XLPE	PANEL P1	MODULE 3 TANK JB-2		CABLE TRAY RATED, SELF CLEANING TANK POWER
C-064	#12 3CC, #12 GND	POWER XLPE	PANEL P2	MODULE 1 TANK JB-1		CABLE TRAY RATED, SELF CLEANING TANK POWER
C-065	#12 3CC, #12 GND	POWER XLPE	PANEL P2	MODULE 1 TANK JB-2		CABLE TRAY RATED, SELF CLEANING TANK POWER
C-066	#12 3CC, #12 GND	POWER XLPE	PANEL P2	MODULE 2 TANK JB-1		CABLE TRAY RATED, SELF CLEANING TANK POWER
C-067	#12 3CC, #12 GND	POWER XLPE	PANEL P2	MODULE 2 TANK JB-2		CABLE TRAY RATED, SELF CLEANING TANK POWER
C-068	#12 3CC, #12 GND	POWER XLPE	PANEL P2	FLOW CTRL VALVE, V-167		CABLE TRAY RATED
C-069	#12 3CC, #12 GND	POWER XLPE	PANEL P2	FLOW CTRL VALVE, V-267		CABLE TRAY RATED
C-070	#12 3CC, #12 GND	POWER XLPE	PANEL P1	FLOW CTRL VALVE, V-389		CABLE TRAY RATED
C-071	#12 3CC, #12 GND	POWER XLPE	PANEL L1	LHO BLOWER, BL-301		CABLE TRAY RATED

ID#	SIZE	TYPE	FROM	TO	K	COMMENTS
C-072	#12 3CC, #12 GND	POWER XLPE	PANEL L1	LHO BLOWER, BL-401		CABLE TRAY RATED
C-073	#12 3CC, #12 GND	POWER XLPE	PANEL L2	LHO BLOWER, BL-101		CABLE TRAY RATED
C-074	#12 3CC, #12 GND	POWER XLPE	PANEL L2	LHO BLOWER, BL-102		CABLE TRAY RATED
C-100	#18, 3CC SH	TS-TRIAD	MASTER PLC - MOXA MB GATEWAY	FLOW METER, FM-301		CABLE TRAY RATED
C-101	#18, 3CC SH	TS-TRIAD	FLOW METER, FM-301	FLOW METER, FM-302		CABLE TRAY RATED
C-102	#18, 3CC SH	TS-TRIAD	FLOW METER, FM-302	FLOW METER, FM-303		CABLE TRAY RATED
C-103	#18, 3CC SH	TS-TRIAD	MASTER PLC - MOXA MB GATEWAY	FLOW METER, FM-401		CABLE TRAY RATED
C-104	#18, 3CC SH	TS-TRIAD	FLOW METER, FM-401	FLOW METER, FM-402		CABLE TRAY RATED
C-105	#18, 3CC SH	TS-TRIAD	FLOW METER, FM-402	FLOW METER, FM-403		CABLE TRAY RATED
C-106	#18, 3CC SH	TS-TRIAD	REMOTE IO - MOXA MB GATEWAY	FLOW METER, FM-101		CABLE TRAY RATED
C-107	#18, 3CC SH	TS-TRIAD	FLOW METER, FM-101	FLOW METER, FM-102		CABLE TRAY RATED
C-108	#18, 3CC SH	TS-TRIAD	FLOW METER, FM-102	FLOW METER, FM-103		CABLE TRAY RATED
C-109	#18, 3CC SH	TS-TRIAD	REMOTE IO - MOXA MB GATEWAY	FLOW METER, FM-201		CABLE TRAY RATED
C-110	#18, 3CC SH	TS-TRIAD	FLOW METER, FM-201	FLOW METER, FM-202		CABLE TRAY RATED
C-111	#18, 3CC SH	TS-TRIAD	FLOW METER, FM-202	FLOW METER, FM-203		CABLE TRAY RATED
C-112	#22, 8CC	CAT6	NSW-01, MASTER PLC ENCLOSURE	NSW-02, REMOTE IO ENCLOSURE		CABLE TRAY RATED
C-113	#22, 8CC	CAT6	PUMP 301 VFD, LCP-301	NSW-01, MASTER PLC ENCLOSURE		CABLE TRAY RATED
C-114	#22, 8CC	CAT6	PUMP 302 VFD, LCP-301	NSW-01, MASTER PLC ENCLOSURE		CABLE TRAY RATED
C-115	#22, 8CC	CAT6	PUMP 303 VFD, LCP-301	NSW-01, MASTER PLC ENCLOSURE		CABLE TRAY RATED
C-116	#22, 8CC	CAT6	PUMP 101 VFD, LCP-101	NSW-02, REMOTE I/O ENCLOSURE		CABLE TRAY RATED
C-117	#22, 8CC	CAT6	PUMP 102 VFD, LCP-101	NSW-02, REMOTE I/O ENCLOSURE		CABLE TRAY RATED
C-118	#22, 8CC	CAT6	PUMP 103 VFD, LCP-101	NSW-02, REMOTE I/O ENCLOSURE		CABLE TRAY RATED
C-119	#22, 8CC	CAT6	PUMP 201 VFD, LCP-201	NSW-02, REMOTE I/O ENCLOSURE		CABLE TRAY RATED
C-120	#22, 8CC	CAT6	PUMP 202 VFD, LCP-201	NSW-02, REMOTE I/O ENCLOSURE		CABLE TRAY RATED
C-121	#22, 8CC	CAT6	PUMP 203 VFD, LCP-201	NSW-02, REMOTE I/O ENCLOSURE		CABLE TRAY RATED
C-122	#18, 2CC	TSP	RAS MODULE 3 SUMP LEVEL, LT-301	MASTER PLC		CABLE TRAY RATED
C-123	#18, 2CC	TSP	UT-301	MASTER PLC		CABLE TRAY RATED, DISSOLVED OXYGEN
C-124	#18, 2CC	TSP	UT-301	MASTER PLC		CABLE TRAY RATED, TEMPERATURE
C-125	#18, 2CC	TSP	UT-401	MASTER PLC		CABLE TRAY RATED, DISSOLVED OXYGEN
C-126	#18, 2CC	TSP	UT-401	MASTER PLC		CABLE TRAY RATED, TEMPERATURE
C-127	#18, 4CC	CABLE	FS-301	MASTER PLC		CABLE TRAY RATED
C-128	#18, 4CC	CABLE	FS-302	MASTER PLC		CABLE TRAY RATED
C-129	#18, 4CC	CABLE	FS-303	MASTER PLC		CABLE TRAY RATED
C-130	#18, 4CC	CABLE	FS-304	MASTER PLC		CABLE TRAY RATED
C-131	#18, 4CC	CABLE	FS-305	MASTER PLC		CABLE TRAY RATED
C-132	#18, 4CC	CABLE	FS-306	MASTER PLC		CABLE TRAY RATED
C-133	#18, 4CC	CABLE	FS-307	MASTER PLC		CABLE TRAY RATED
C-134	#18, 4CC	CABLE	FS-308	MASTER PLC		CABLE TRAY RATED
C-135	#18, 4CC	CABLE	FS-309	MASTER PLC		CABLE TRAY RATED
C-136	#18, 4CC	CABLE	FS-310	MASTER PLC		CABLE TRAY RATED
C-137	#18, 4CC	CABLE	FS-311	MASTER PLC		CABLE TRAY RATED
C-138	#18, 3CC SH	TS-TRIAD	V-389	MASTER PLC-MOXA MB GATEWAY		CABLE TRAY RATED
C-139	#18, 4CC	CABLE	LHO LEVEL, LS-450	MASTER PLC		CABLE TRAY RATED
C-140	#18, 4CC	CABLE	LHO BLOWER, BL-401	MASTER PLC		CABLE TRAY RATED
C-141	#18, 2CC	TSP	RAS MODULE 1 SUMP LEVEL, LT-101	REMOTE I/O		CABLE TRAY RATED
C-142	#18, 2CC	TSP	RAS MODULE 2 SUMP LEVEL, LT-201	REMOTE I/O		CABLE TRAY RATED
C-143	#18, 2CC	TSP	UT-101	REMOTE I/O		CABLE TRAY RATED, DISSOLVED OXYGEN
C-144	#18, 2CC	TSP	UT-101	REMOTE I/O		CABLE TRAY RATED, TEMPERATURE
C-145	#18, 2CC	TSP	UT-201	REMOTE I/O		CABLE TRAY RATED, DISSOLVED OXYGEN
C-146	#18, 2CC	TSP	UT-201	REMOTE I/O		CABLE TRAY RATED, TEMPERATURE
C-147	#18, 4CC	CABLE	FS-101	REMOTE I/O		CABLE TRAY RATED
C-148	#18, 4CC	CABLE	FS-102	REMOTE I/O		CABLE TRAY RATED
C-149	#18, 4CC	CABLE	FS-103	REMOTE I/O		CABLE TRAY RATED
C-150	#18, 4CC	CABLE	FS-104	REMOTE I/O		CABLE TRAY RATED
C-151	#18, 4CC	CABLE	FS-105	REMOTE I/O		CABLE TRAY RATED
C-152	#18, 4CC	CABLE	FS-106	REMOTE I/O		CABLE TRAY RATED
C-153	#18, 4CC	CABLE	FS-107	REMOTE I/O		CABLE TRAY RATED
C-154	#18, 4CC	CABLE	FS-108	REMOTE I/O		CABLE TRAY RATED
C-155	#18, 4CC	CABLE	FS-201	REMOTE I/O		CABLE TRAY RATED

REVIEWED FOR CODE COMPLIANCE
Thomas W Peterson
12/14/2023
DIVISION OF FACILITIES CONSTRUCTION AND MANAGEMENT
DFCM CODE COMPLIANCE OFFICER

	PUBLISHED		
C	100% DESIGN REVIEW	JT	10/23
B	90% DESIGN REVIEW	JT	9/23
A	50% DESIGN REVIEW	JT	5/23
NO.	REVISIONS	BY	DATE

This document or any part thereof in detail or design concept is the property of Forsgren Associates Inc. and shall not be copied without the written authorization of Forsgren Associates Inc.

DRAWN DJ
DESIGNED MEC
APPROVED
QA MLL

ATTENTION
LINE IS 2-INCHES
AT 24"x36" SIZE
IF NOT 2-INCHES, SCALE DRAWING ACCORDINGLY

PROFESSIONAL ENGINEER
No. 9428479-2202
MATHEW LEWIS LAWSON
STATE OF UTAH
10/04/2023

FISHERIES EXPERIMENT STATION
UTAH DIVISION OF WILDLIFE RESOURCES
1465 WEST 200 NORTH
LOGAN, UTAH 84321

UTAH DNR WILDLIFE RESOURCES

McMillen

Blue Stakes of UTAH 811 Bluestakes.org

WARN WATER AQUACULTURE BUILDING
LOGAN HATCHERY IMPROVEMENT PROJECT

CABLE SCHEDULE 1

PROJECT NO: 14-23-0005
SHEET NO: GE007
DATE: 10-2023
PAGE NO: 113

ID#	SIZE	TYPE	FROM	TO	K	COMMENTS
C-156	#18, 4CC	CABLE	FS-202	REMOTE I/O		CABLE TRAY RATED
C-157	#18, 4CC	CABLE	FS-203	REMOTE I/O		CABLE TRAY RATED
C-158	#18, 4CC	CABLE	FS-204	REMOTE I/O		CABLE TRAY RATED
C-159	#18, 4CC	CABLE	FS-205	REMOTE I/O		CABLE TRAY RATED
C-160	#18, 4CC	CABLE	FS-206	REMOTE I/O		CABLE TRAY RATED
C-161	#18, 4CC	CABLE	FS-207	REMOTE I/O		CABLE TRAY RATED
C-162	#18, 4CC	CABLE	FS-208	REMOTE I/O		CABLE TRAY RATED
C-163	#18, 3CC SH	TS-TRIAD	V-167	V-267		CABLE TRAY RATED
C-164	#18, 3CC SH	TS-TRIAD	V-267	REMOTE I/O - MOXA MB GATEWAY		CABLE TRAY RATED
C-165	#18, 7CC	CABLE	UV-301	MASTER PLC	20	CABLE TRAY RATED
C-166	#18, 7CC	CABLE	BOILER, B-301	MASTER PLC		CABLE TRAY RATED
C-167	#18, 7CC	CABLE	BOILER, B-302	MASTER PLC		CABLE TRAY RATED
C-168	#18, 7CC	CABLE	CHILLER, CH-401	MASTER PLC		CABLE TRAY RATED
C-169	#18, 7CC	CABLE	CHILLER, CH-402	MASTER PLC		CABLE TRAY RATED
C-170	#18, 7CC	CABLE	DRUM FILTER, DF-301	MASTER PLC		CABLE TRAY RATED
C-171	#18, 7CC	CABLE	DRUM FILTER, DF-101	REMOTE I/O		CABLE TRAY RATED
C-172	#18, 7CC	CABLE	DRUM FILTER, DF-102	REMOTE I/O		CABLE TRAY RATED
C-173	#18, 7CC	CABLE	UV-101	REMOTE I/O		CABLE TRAY RATED
C-174	#18, 7CC	CABLE	UV-102	REMOTE I/O		CABLE TRAY RATED
C-175	#18, 7CC	CABLE	BOILER, B-101	REMOTE I/O		CABLE TRAY RATED
C-176	#18, 7CC	CABLE	BOILER, B-102	REMOTE I/O		CABLE TRAY RATED
C-177	#18, 4CC	CABLE	LHO LEVEL, LS-350	MASTER PLC		CABLE TRAY RATED
C-178	#18, 4CC	CABLE	LHO BLOWER, BL-301	MASTER PLC		CABLE TRAY RATED
C-179	#18, 4CC	CABLE	LS-301	MASTER PLC		CABLE TRAY RATED
C-180	#18, 4CC	CABLE	LS-302	MASTER PLC		CABLE TRAY RATED
C-181	#18, 4CC	CABLE	LS-303	MASTER PLC		CABLE TRAY RATED
C-182	#18, 4CC	CABLE	LS-304	MASTER PLC		CABLE TRAY RATED
C-183	#18, 4CC	CABLE	LS-305	MASTER PLC		CABLE TRAY RATED
C-184	#18, 4CC	CABLE	LS-306	MASTER PLC		CABLE TRAY RATED
C-185	#18, 4CC	CABLE	LS-307	MASTER PLC		CABLE TRAY RATED
C-186	#18, 4CC	CABLE	LS-308	MASTER PLC		CABLE TRAY RATED
C-187	#18, 4CC	CABLE	LS-309	MASTER PLC		CABLE TRAY RATED
C-188	#18, 4CC	CABLE	LS-310	MASTER PLC		CABLE TRAY RATED
C-189	#18, 4CC	CABLE	LS-311	MASTER PLC		CABLE TRAY RATED
C-190	#18, 4CC	CABLE	LHO LEVEL, LS-150	REMOTE I/O		CABLE TRAY RATED
C-191	#18, 4CC	CABLE	LHO BLOWER, BL-101	REMOTE I/O		CABLE TRAY RATED
C-192	#18, 4CC	CABLE	LHO LEVEL, LS-250	REMOTE I/O		CABLE TRAY RATED
C-193	#18, 4CC	CABLE	LHO BLOWER, BL-201	REMOTE I/O		CABLE TRAY RATED
C-194	#18, 4CC	CABLE	LS-101	REMOTE I/O		CABLE TRAY RATED
C-195	#18, 4CC	CABLE	LS-102	REMOTE I/O		CABLE TRAY RATED
C-196	#18, 4CC	CABLE	LS-103	REMOTE I/O		CABLE TRAY RATED
C-197	#18, 4CC	CABLE	LS-104	REMOTE I/O		CABLE TRAY RATED
C-198	#18, 4CC	CABLE	LS-105	REMOTE I/O		CABLE TRAY RATED
C-199	#18, 4CC	CABLE	LS-106	REMOTE I/O		CABLE TRAY RATED
C-200	#18, 4CC	CABLE	LS-107	REMOTE I/O		CABLE TRAY RATED
C-201	#18, 4CC	CABLE	LS-108	REMOTE I/O		CABLE TRAY RATED
C-202	#18, 4CC	CABLE	LS-201	REMOTE I/O		CABLE TRAY RATED
C-203	#18, 4CC	CABLE	LS-202	REMOTE I/O		CABLE TRAY RATED
C-204	#18, 4CC	CABLE	LS-203	REMOTE I/O		CABLE TRAY RATED
C-205	#18, 4CC	CABLE	LS-204	REMOTE I/O		CABLE TRAY RATED
C-206	#18, 4CC	CABLE	LS-205	REMOTE I/O		CABLE TRAY RATED
C-207	#18, 4CC	CABLE	LS-206	REMOTE I/O		CABLE TRAY RATED
C-208	#18, 4CC	CABLE	LS-207	REMOTE I/O		CABLE TRAY RATED
C-209	#18, 4CC	CABLE	LS-208	REMOTE I/O		CABLE TRAY RATED
C-210	#18, 4CC	CABLE	MODULE 3 HORN/STROBE	MASTER PLC		CABLE TRAY RATED
C-211	#18, 4CC	CABLE	INCUBATION HORN/STROBE	MASTER PLC		CABLE TRAY RATED
C-212	#18, 4CC	CABLE	MODULE 1 HORN/STROBE	REMOTE I/O		CABLE TRAY RATED
C-213	#18, 4CC	CABLE	MODULE 2 HORN/STROBE	REMOTE I/O		CABLE TRAY RATED
C-214	#18, 4CC	CABLE	EXTERIOR HORN/STROBE	REMOTE I/O		CABLE TRAY RATED

REVIEWED FOR CODE COMPLIANCE
Thomas W Peterson
12/14/2023
DIVISION OF FACILITIES CONSTRUCTION AND MANAGEMENT

DFCM CODE COMPLIANCE OFFICER

NO.	REVISIONS	BY	DATE
	PUBLISHED		
C	100% DESIGN REVIEW	JT	10/23
B	90% DESIGN REVIEW	JT	9/23
A	50% DESIGN REVIEW	JT	5/23

This document or any part thereof in detail or design concept is the property of Forsgren Associates Inc. and shall not be copied without the written authorization of Forsgren Associates Inc.

DRAWN DJ
DESIGNED MEC
APPROVED
QA MLL

ATTENTION
LINE IS 2-INCHES
AT 24"x36" SIZE
IF NOT 2-INCHES,
SCALE DRAWING ACCORDINGLY

PROFESSIONAL ENGINEER
No. 9428479-2202
MATHEW LEWIS LAWSON
STATE OF UTAH
10/04/2023

FISHERIES EXPERIMENT STATION
UTAH DIVISION OF WILDLIFE RESOURCES
1465 WEST 200 NORTH
LOGAN, UTAH 84321

UTAH DNR WILDLIFE RESOURCES

McMillen

Blue Stakes of UTAH 811 Bluestakes.org

WARN WATER AQUACULTURE BUILDING
LOGAN HATCHERY IMPROVEMENT PROJECT

CABLE SCHEDULE 2

PROJECT NO: 14-23-0005
SHEET NO: GE008
DATE: 10-2023
PAGE NO: 114

ID #	CLASS	FROM	TO	SIZE	TYPE	CABLES IN CONDUIT	ROUTING TYPE	COMMENTS
K-001	POWER	LCP-301	DISC-301	1"	RGS	4	SURFACE	ROUTE AS NEEDED
K-002	POWER	DISC-301	P-301	1"	RGS/LFMC	7	EMBEDDED/SURFACE	CORROSION WRAP EMBEDDED RGS, TRANSITION LFMC AT MOTOR
K-003	POWER	LCP-301	DISC-302	1"	RGS	5	SURFACE	ROUTE AS NEEDED
K-004	POWER	DISC-302	P-302	1"	RGS/LFMC	8	EMBEDDED/SURFACE	CORROSION WRAP EMBEDDED RGS, TRANSITION LFMC AT MOTOR
K-005	POWER	LCP-301	DISC-303	1"	RGS	6	SURFACE	ROUTE AS NEEDED
K-006	POWER	DISC-303	P-303	1"	RGS/LFMC	9	EMBEDDED/SURFACE	CORROSION WRAP EMBEDDED RGS, TRANSITION LFMC AT MOTOR
K-007	POWER	LCP-101	DISC-101	1"	RGS	13	EMBEDDED/SURFACE	CORROSION WRAP EMBEDDED RGS
K-008	POWER	DISC-101	P-101	1"	RGS/LFMC	16	SURFACE	ROUTE AS NEEDED, TRANSITION LFMC AT MOTOR
K-009	POWER	LCP-101	DISC-102	1"	RGS	14	EMBEDDED/SURFACE	CORROSION WRAP EMBEDDED RGS
K-010	POWER	DISC-102	P-102	1"	RGS/LFMC	17	SURFACE	ROUTE AS NEEDED, TRANSITION LFMC AT MOTOR
K-011	POWER	LCP-101	DISC-103	1"	RGS	15	EMBEDDED/SURFACE	CORROSION WRAP EMBEDDED RGS
K-012	POWER	DISC-103	P-103	1"	RGS/LFMC	18	SURFACE	ROUTE AS NEEDED, TRANSITION LFMC AT MOTOR
K-013	POWER	LCP-201	DISC-201	1"	RGS	22	EMBEDDED/SURFACE	CORROSION WRAP EMBEDDED RGS
K-014	POWER	DISC-201	P-201	1"	RGS/LFMC	25	SURFACE	ROUTE AS NEEDED, TRANSITION LFMC AT MOTOR
K-015	POWER	LCP-201	DISC-202	1"	RGS	23	EMBEDDED/SURFACE	CORROSION WRAP EMBEDDED RGS
K-016	POWER	DISC-202	P-202	1"	RGS/LFMC	26	SURFACE	ROUTE AS NEEDED, TRANSITION LFMC AT MOTOR
K-017	POWER	LCP-201	DISC-203	1"	RGS	24	EMBEDDED/SURFACE	CORROSION WRAP EMBEDDED RGS
K-018	POWER	DISC-203	P-203	1"	RGS/LFMC	27	SURFACE	ROUTE AS NEEDED, TRANSITION LFMC AT MOTOR
K-019	POWER	CABLE TRAY, INCUBATION ROOM	UV-301	1"	RGS	33	EMBEDDED/SURFACE	CORROSION WRAP EMBEDDED RGS
K-020	CONTROL	CABLE TRAY, INCUBATION ROOM	UV-301	1"	RGS	175	EMBEDDED/SURFACE	CORROSION WRAP EMBEDDED RGS

SHEET NOTES:

1. SURFACE MOUNT CONDUIT FROM CABLE TRAYS TO EQUIPMENT NOT LISTED. ROUTE AND SIZE AS NEEDED. POWER AND CONTROL CABLES CANNOT BE TOGETHER WITHIN SAME CONDUIT.

REVIEWED FOR CODE COMPLIANCE
Thomas W Peterson
12/14/2023
DIVISION OF FACILITIES CONSTRUCTION AND MANAGEMENT
DFCM CODE COMPLIANCE OFFICER

NO.	REVISIONS	BY	DATE
	PUBLISHED		
C	100% DESIGN REVIEW	JT	10/23
B	90% DESIGN REVIEW	JT	9/23
A	50% DESIGN REVIEW	JT	5/23

This document or any part thereof in detail or design concept is the property of Forsgren Associates Inc. and shall not be copied without the written authorization of Forsgren Associates Inc.

DRAWN DJ
DESIGNED MEC
APPROVED
QA MLL

ATTENTION
LINE IS 2-INCHES
AT 24"x36" SIZE
IF NOT 2-INCHES, SCALE DRAWING ACCORDINGLY

PROFESSIONAL ENGINEER
No. 9428479-2202
MATHEW LEWIS LAWSON
STATE OF UTAH
10/04/2023

FISHERIES EXPERIMENT STATION
UTAH DIVISION OF WILDLIFE RESOURCES
1465 WEST 200 NORTH
LOGAN, UTAH 84321

UTAH DNR WILDLIFE RESOURCES

McMillen

Blue Stakes of UTAH 811 Bluestakes.org

WARN WATER AQUACULTURE BUILDING
LOGAN HATCHERY IMPROVEMENT PROJECT

CONDUIT SCHEDULE

PROJECT NO: 14-23-0005
SHEET NO: GE009
DATE: 10-2023
PAGE NO: 115

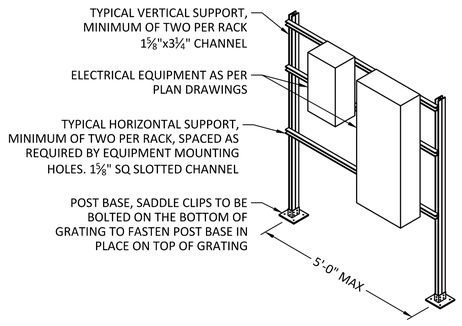

NOTES:
1. ALL CHANNEL CONNECTIONS SHALL BE SECURED USING CHANNEL NUTS AND HARDWARE BY CHANNEL MANUFACTURER.

E108 FREE STANDING EQUIPMENT RACK CONSTRUCTION
SCALE: NTS

REVIEWED FOR CODE COMPLIANCE
Thomas W Peterson
12/1/2023
DIVISION OF FACILITIES CONSTRUCTION AND MANAGEMENT
DFCM CODE COMPLIANCE OFFICER

NO.	REVISIONS	BY	DATE
	PUBLISHED		
C	100% DESIGN REVIEW	JT	10/23
B	90% DESIGN REVIEW	JT	9/23
A	50% DESIGN REVIEW	JT	5/23

This document or any part thereof in detail or design concept is the property of Forsgren Associates Inc. and shall not be copied without the written authorization of Forsgren Associates Inc.

DRAWN DJ
DESIGNED MEC
APPROVED
QA MLL

ATTENTION
LINE IS 2-INCHES AT 24"x36" SIZE
IF NOT 2-INCHES, SCALE DRAWING ACCORDINGLY

PROFESSIONAL ENGINEER
No. 9428479-2202
MATHEW LEWIS LAWSON
STATE OF UTAH
10/04/2023

FISHERIES EXPERIMENT STATION
UTAH DIVISION OF WILDLIFE RESOURCES
1465 WEST 200 NORTH
LOGAN, UTAH 84321

UTAH DNR WILDLIFE RESOURCES

McMillen

Blue Stakes of UTAH 811 Bluestakes.org

WARN WATER AQUACULTURE BUILDING
LOGAN HATCHERY IMPROVEMENT PROJECT
ELECTRICAL STANDARD DETAILS

PROJECT NO: 14-23-0005
SHEET NO: GE010
DATE: 10-2023
PAGE NO: 116

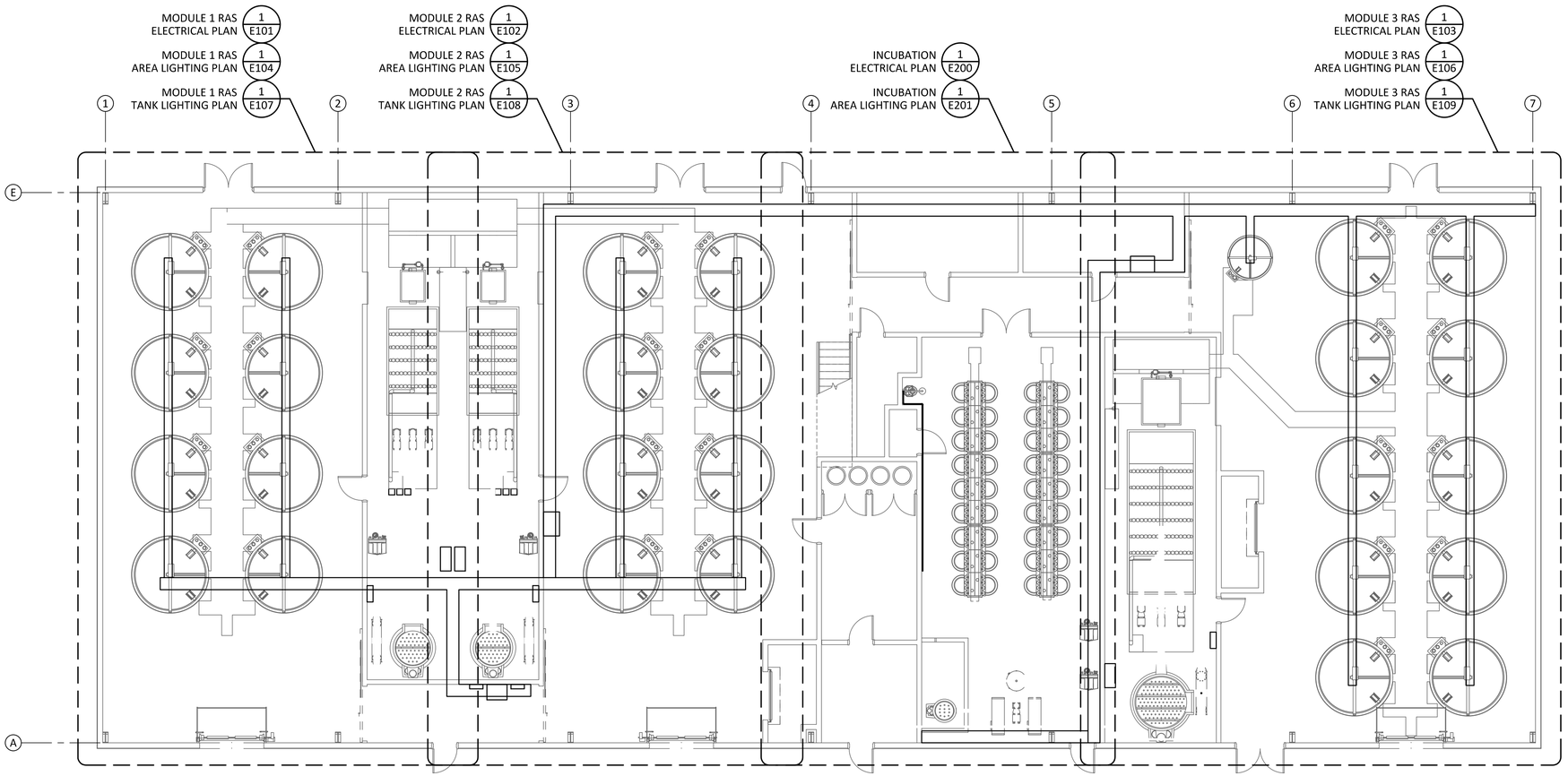

ELECTRICAL OVERALL LAYOUT

SCALE: 1/8"= 1'-0"

0' 8' 16'

REVIEWED FOR CODE COMPLIANCE
Thomas W Peterson
12/14/2023
DIVISION OF FACILITIES CONSTRUCTION AND MANAGEMENT

DFCM CODE COMPLIANCE OFFICER

NO.	REVISIONS	BY	DATE
	PUBLISHED		
C	100% DESIGN REVIEW	JT	10/23
B	90% DESIGN REVIEW	JT	9/23
A	50% DESIGN REVIEW	JT	5/23

This document or any part thereof in detail or design concept is the property of Forsgren Associates Inc. and shall not be copied without the written authorization of Forsgren Associates Inc.

DRAWN DJ
DESIGNED MEC
APPROVED
QA MLL

ATTENTION
LINE IS 2-INCHES
AT 24"x36" SIZE
IF NOT 2-INCHES, SCALE DRAWING ACCORDINGLY

PROFESSIONAL ENGINEER No. 9428479-2202 MATHEW LEWIS LAWSON STATE OF UTAH
10/04/2023

FISHERIES EXPERIMENT STATION
UTAH DIVISION OF WILDLIFE RESOURCES
1465 WEST 200 NORTH
LOGAN, UTAH 84321

UTAH DNR WILDLIFE RESOURCES

McMillen

Blue Stakes of UTAH 811 Bluestakes.org

WARN WATER AQUACULTURE BUILDING
LOGAN HATCHERY IMPROVEMENT PROJECT

HATCHERY BUILDING
ELECTRICAL KEY PLAN

PROJECT NO: 14-23-0005
SHEET NO: E100
DATE: 10-2023
PAGE NO: 117

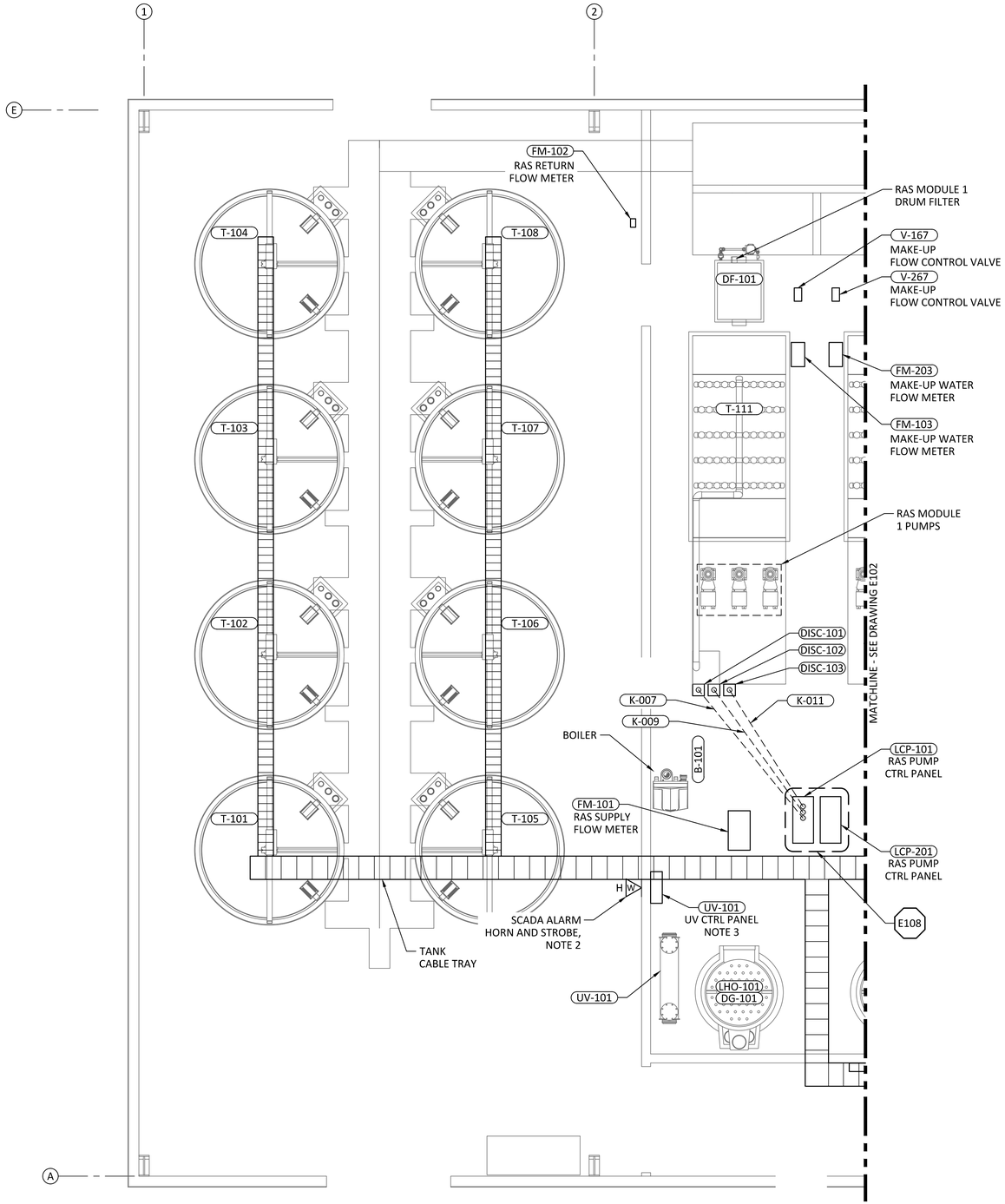

1 / E100 MODULE 1 RAS ELECTRICAL PLAN

SCALE: 1/4"= 1'-0"

0' 4' 8'

SHEET NOTES:

1. ONLY EMBEDDED CONDUIT SHOWN, ALL OTHERS ARE SURFACE MOUNTED. ROUTE SURFACE MOUNT AS NECESSARY. SEE CONDUIT SCHEDULE FOR DETAILS.
2. SCADA ALARM HORN AND STROBE CONFIGURED TO PROVIDE AUDITORY AND VISUAL ALERT ONLY DURING BUSINESS HOURS.
3. MOUNT UV CONTROL PANEL AT HEIGHT THAT DOES NOT INTERFERE WITH REMOVAL OF UV LAMPS. UV LAMP CABLES SHALL BE LOOSE AND HANG BETWEEN UV CONTROL PANEL AND REACTOR UNIT.

REVIEWED FOR CODE COMPLIANCE
Thomas W Peterson
12/14/2023
DIVISION OF FACILITIES CONSTRUCTION AND MANAGEMENT

DFCM CODE COMPLIANCE OFFICER

NO.	REVISIONS	BY	DATE
C	100% DESIGN REVIEW	JT	10/23
B	90% DESIGN REVIEW	JT	9/23
A	50% DESIGN REVIEW	JT	5/23

This document or any part thereof in detail or design concept is the property of Forsgren Associates Inc. and shall not be copied without the written authorization of Forsgren Associates Inc.

DRAWN DJ
DESIGNED MEC
APPROVED
QA MLL

ATTENTION
LINE IS 2-INCHES
AT 24"x36" SIZE
IF NOT 2-INCHES, SCALE DRAWING ACCORDINGLY

PROFESSIONAL ENGINEER
No. 9428479-2202
MATHEW LEWIS LAWSON
STATE OF UTAH
10/04/2023

FISHERIES EXPERIMENT STATION
UTAH DIVISION OF WILDLIFE RESOURCES
1465 WEST 200 NORTH
LOGAN, UTAH 84321

UTAH DNR WILDLIFE RESOURCES

McMillen

Blue Stakes of UTAH 811 Bluestakes.org

WARN WATER AQUACULTURE BUILDING
LOGAN HATCHERY IMPROVEMENT PROJECT
HATCHERY BUILDING MODULE 1 RAS ELECTRICAL PLAN

PROJECT NO: 14-23-0005
SHEET NO: E101
DATE: 10-2023
PAGE NO: 118

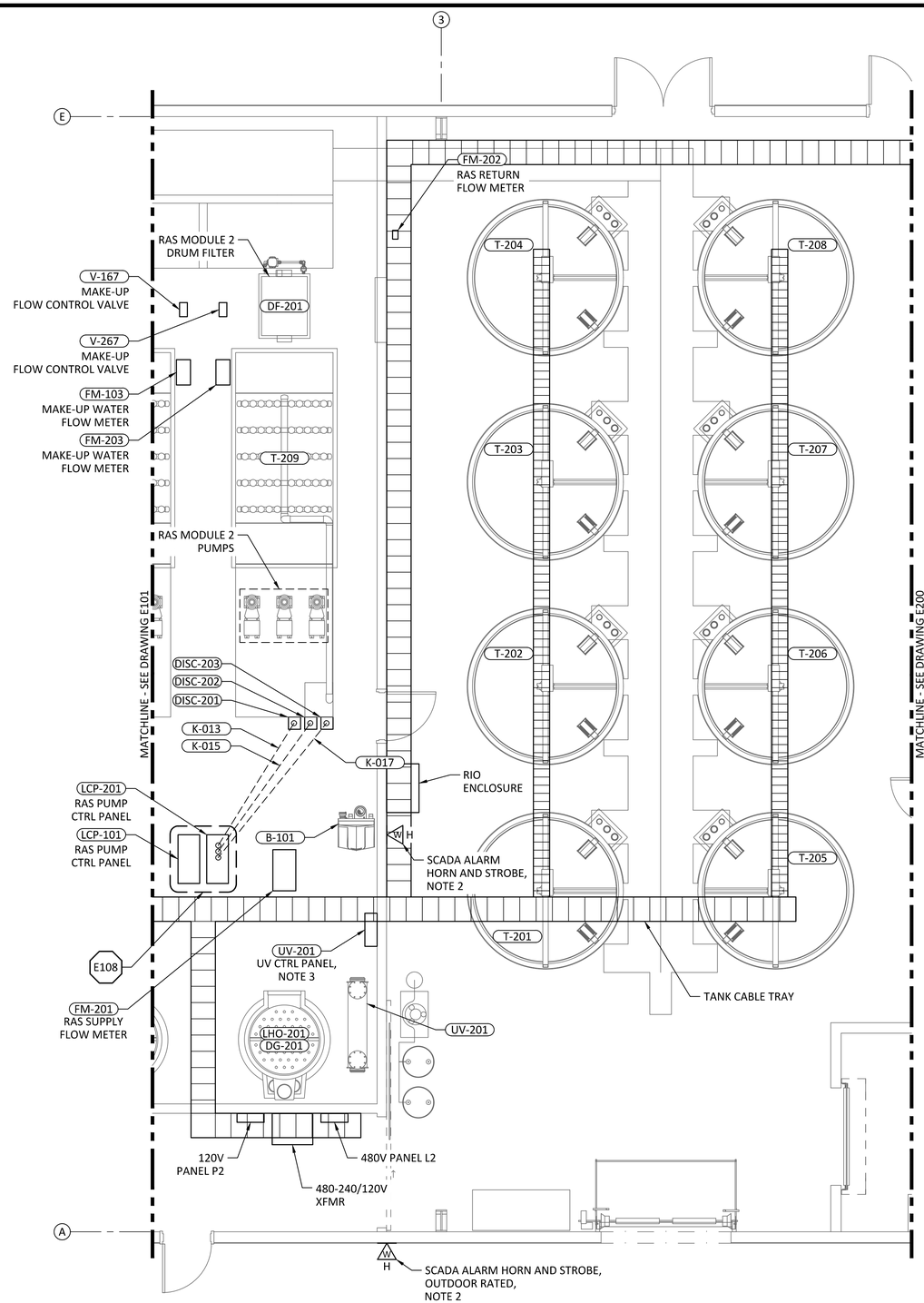

1 E100 MODULE 2 RAS ELECTRICAL PLAN

SCALE: 1/4"= 1'-0"

0' 4' 8'

SHEET NOTES:

1. ONLY EMBEDDED CONDUIT SHOWN, ALL OTHERS ARE SURFACE MOUNTED. ROUTE SURFACE MOUNT AS NECESSARY. SEE CONDUIT SCHEDULE FOR DETAILS.
2. SCADA ALARM HORN AND STROBE CONFIGURED TO PROVIDE AUDITORY AND VISUAL ALERT ONLY DURING BUSINESS HOURS.
3. MOUNT UV CONTROL PANEL AT HEIGHT THAT DOES NOT INTERFERE WITH REMOVAL OF UV LAMPS. UV LAMP CABLES SHALL BE LOOSE AND HANG BETWEEN UV CONTROL PANEL AND REACTOR UNIT.

REVIEWED FOR CODE COMPLIANCE
Thomas W Peterson
12/14/2023
DIVISION OF FACILITIES CONSTRUCTION AND MANAGEMENT

DFCM CODE COMPLIANCE OFFICER

NO.	REVISIONS	BY	DATE
C	100% DESIGN REVIEW	JT	10/23
B	90% DESIGN REVIEW	JT	9/23
A	50% DESIGN REVIEW	JT	5/23

This document or any part thereof in detail or design concept is the property of Forsgren Associates Inc. and shall not be copied without the written authorization of Forsgren Associates Inc.

DRAWN DJ
DESIGNED MEC
APPROVED
QA MLL

ATTENTION
LINE IS 2-INCHES
AT 24"x36" SIZE
IF NOT 2-INCHES, SCALE DRAWING ACCORDINGLY

PROFESSIONAL ENGINEER
No. 9428479-2202
MATHEW LEWIS LAWSON
STATE OF UTAH
10/04/2023

FISHERIES EXPERIMENT STATION
UTAH DIVISION OF WILDLIFE RESOURCES
1465 WEST 200 NORTH
LOGAN, UTAH 84321

UTAH DNR WILDLIFE RESOURCES

McMillen

Blue Stakes of UTAH 811 Bluestakes.org

WARN WATER AQUACULTURE BUILDING
LOGAN HATCHERY IMPROVEMENT PROJECT
HATCHERY BUILDING MODULE 2 RAS ELECTRICAL PLAN

PROJECT NO: 14-23-0005
SHEET NO: E102
DATE: 10-2023
PAGE NO: 119

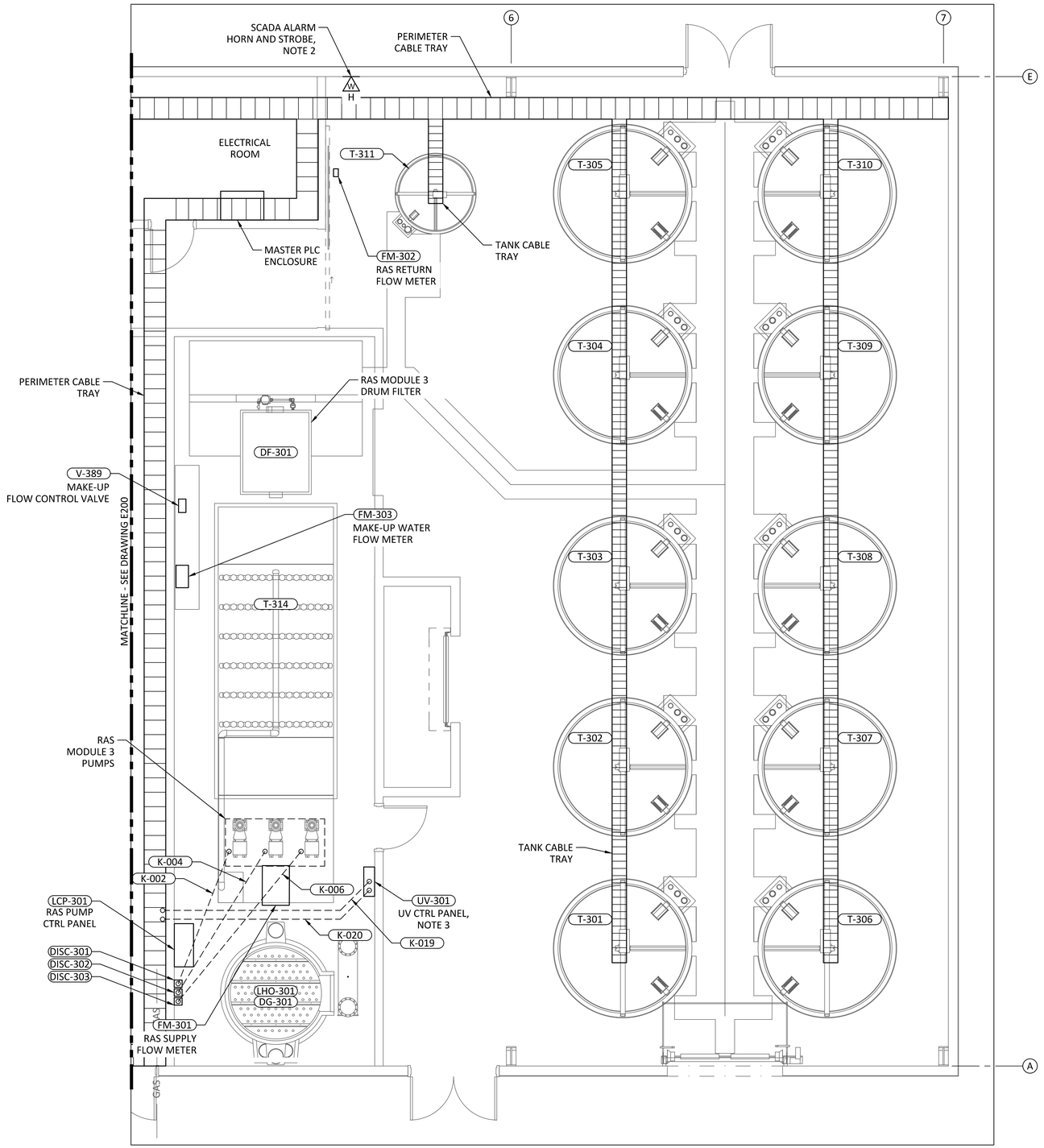

1 E100 MODULE 3 RAS ELECTRICAL PLAN

SCALE: 1/4"= 1'-0"

0' 4' 8'

SHEET NOTES:

1. ONLY EMBEDDED CONDUIT SHOWN, ALL OTHERS ARE SURFACE MOUNTED. ROUTE SURFACE MOUNT AS NECESSARY. SEE CONDUIT SCHEDULE FOR DETAILS.
2. SCADA ALARM HORN AND STROBE CONFIGURED TO PROVIDE AUDITORY AND VISUAL ALERT ONLY DURING BUSINESS HOURS.
3. MOUNT UV CONTROL PANEL AT HEIGHT THAT DOES NOT INTERFERE WITH REMOVAL OF UV LAMPS. UV LAMP CABLES SHALL BE LOOSE AND HANG BETWEEN UV CONTROL PANEL AND REACTOR UNIT.

REVIEWED FOR CODE COMPLIANCE
Thomas W Peterson
12/14/2023
DIVISION OF FACILITIES CONSTRUCTION AND MANAGEMENT

DFCM CODE COMPLIANCE OFFICER

NO.	REVISIONS	BY	DATE
C	100% DESIGN REVIEW	JT	10/23
B	90% DESIGN REVIEW	JT	9/23
A	50% DESIGN REVIEW	JT	5/23

This document or any part thereof in detail or design concept is the property of Forsgren Associates Inc. and shall not be copied without the written authorization of Forsgren Associates Inc.

DRAWN DJ
DESIGNED MEC
APPROVED
QA MLL

ATTENTION
LINE IS 2-INCHES AT 24"x36" SIZE
IF NOT 2-INCHES, SCALE DRAWING ACCORDINGLY

PROFESSIONAL ENGINEER
No. 9428479-2202
MATHEW LEWIS LAWSON
STATE OF UTAH
10/04/2023

FISHERIES EXPERIMENT STATION
UTAH DIVISION OF WILDLIFE RESOURCES
1465 WEST 200 NORTH
LOGAN, UTAH 84321

UTAH DNR WILDLIFE RESOURCES

McMillen

Blue Stakes of UTAH 811 Bluestakes.org

WARN WATER AQUACULTURE BUILDING
LOGAN HATCHERY IMPROVEMENT PROJECT
HATCHERY BUILDING MODULE 3 RAS ELECTRICAL PLAN

PROJECT NO: 14-23-0005
SHEET NO: E103
DATE: 10-2023
PAGE NO: 120

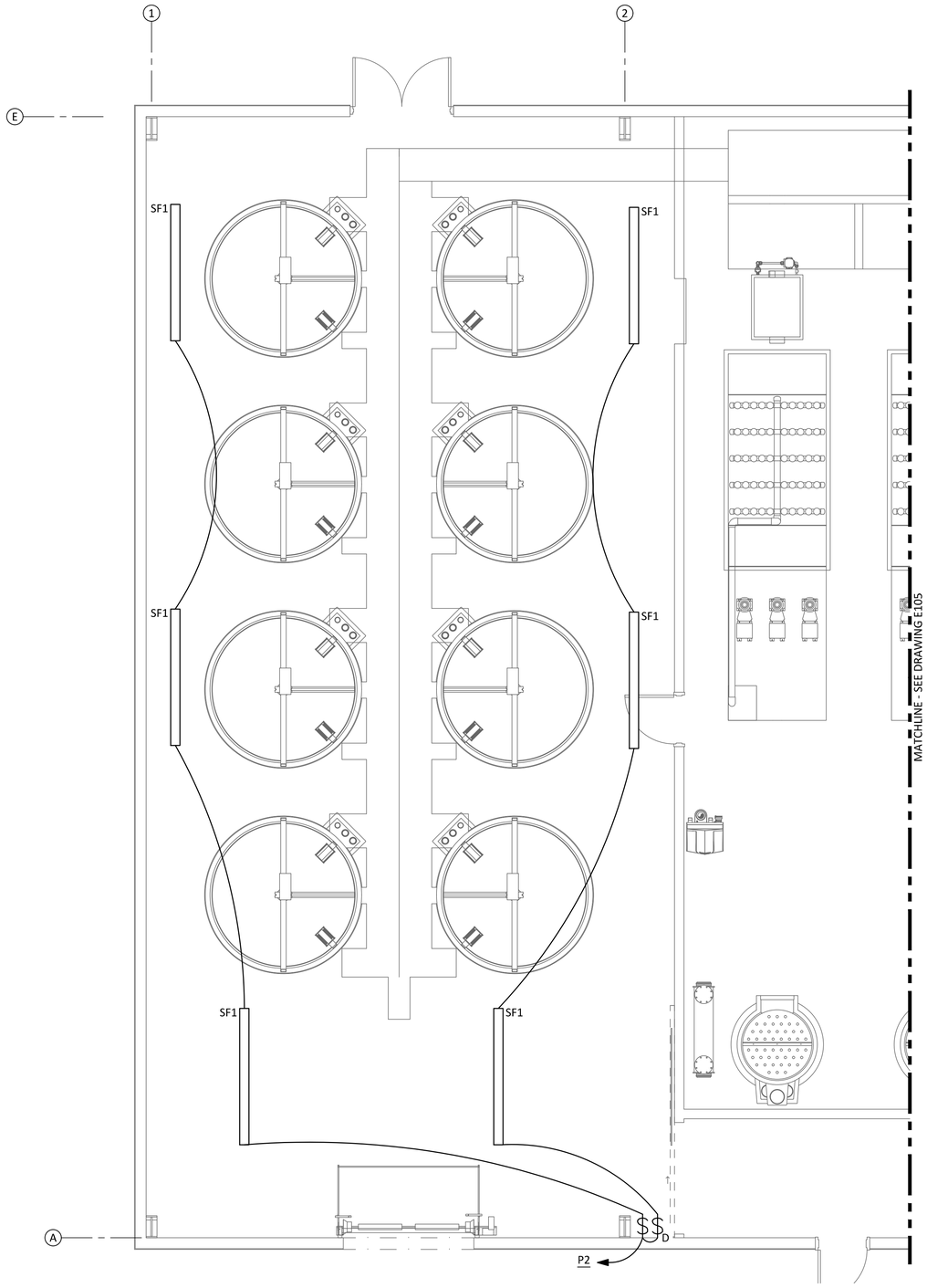

1 E100 MODULE 1 RAS AREA LIGHTING PLAN

SCALE: 1/4"= 1'-0"

0' 4' 8'

SHEET NOTES:

1. DIMMER SWITCH ARE 0-10V TYPE COMPATIBLE WITH LUMINAIRE. SWITCH SHALL HAVE SOFT START FEATURE TO SLOWLY RAMP LIGHT OUTPUT.

REVIEWED FOR CODE COMPLIANCE
Thomas W Peterson
12/14/2023
DIVISION OF FACILITIES CONSTRUCTION AND MANAGEMENT

DFCM CODE COMPLIANCE OFFICER

NO.	REVISIONS	BY	DATE
	PUBLISHED		
C	100% DESIGN REVIEW	JT	10/23
B	90% DESIGN REVIEW	JT	9/23
A	50% DESIGN REVIEW	JT	5/23

This document or any part thereof in detail or design concept is the property of Forsgren Associates Inc. and shall not be copied without the written authorization of Forsgren Associates Inc.

DRAWN DJ
DESIGNED MEC
APPROVED
QA MLL

ATTENTION
LINE IS 2-INCHES
AT 24"x36" SIZE
IF NOT 2-INCHES, SCALE DRAWING ACCORDINGLY

PROFESSIONAL ENGINEER
No. 9428479-2202
MATHEW LEWIS LAWSON
STATE OF UTAH
10/04/2023

FISHERIES EXPERIMENT STATION
UTAH DIVISION OF WILDLIFE RESOURCES
1465 WEST 200 NORTH
LOGAN, UTAH 84321

UTAH DNR WILDLIFE RESOURCES

McMillen

Blue Stakes of UTAH 811 Bluestakes.org

WARN WATER AQUACULTURE BUILDING
LOGAN HATCHERY IMPROVEMENT PROJECT
HATCHERY BUILDING MODULE 1 RAS AREA LIGHTING PLAN

PROJECT NO: 14-23-0005
SHEET NO: E104
DATE: 10-2023
PAGE NO: 121

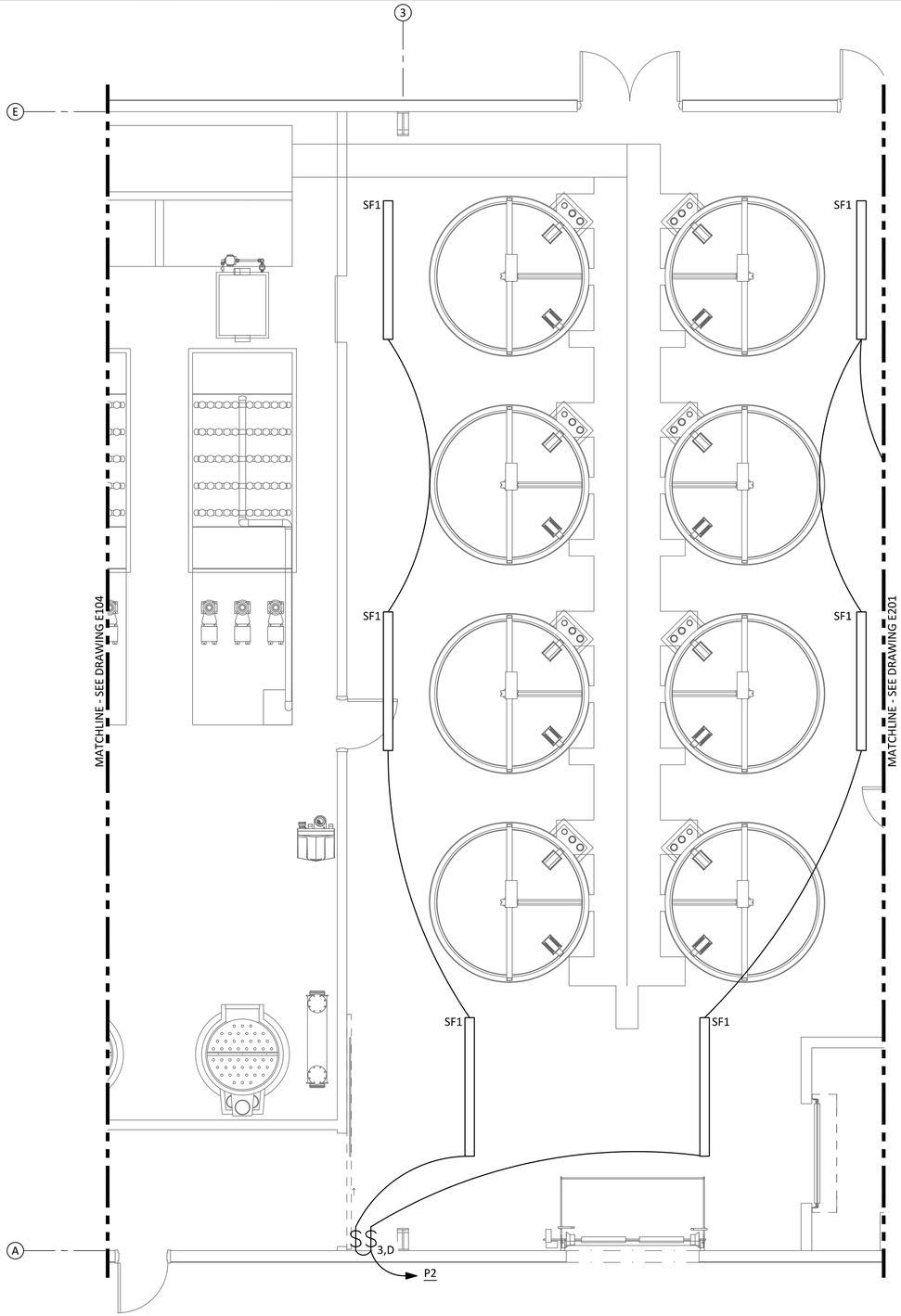

1 E100 MODULE 2 RAS AREA LIGHTING PLAN

SCALE: 1/4"= 1'-0"

0' 4' 8'

SHEET NOTES:

1. DIMMER SWITCH ARE 0-10V TYPE COMPATIBLE WITH LUMINAIRE. SWITCH SHALL HAVE SOFT START FEATURE TO SLOWLY RAMP LIGHT OUTPUT.

REVIEWED FOR CODE COMPLIANCE
Thomas W Peterson
12/1/4/2023
DIVISION OF FACILITIES CONSTRUCTION AND MANAGEMENT

DFCM CODE COMPLIANCE OFFICER

NO.	REVISIONS	BY	DATE
	PUBLISHED		
C	100% DESIGN REVIEW	JT	10/23
B	90% DESIGN REVIEW	JT	9/23
A	50% DESIGN REVIEW	JT	5/23

This document or any part thereof in detail or design concept is the property of Forsgren Associates Inc. and shall not be copied without the written authorization of Forsgren Associates Inc.

DRAWN DJ
DESIGNED MEC
APPROVED
QA MLL

ATTENTION
LINE IS 2-INCHES
AT 24"x36" SIZE
IF NOT 2-INCHES, SCALE DRAWING ACCORDINGLY

PROFESSIONAL ENGINEER
No. 9428479-2202
MATHEW LEWIS LAWSON
STATE OF UTAH
10/04/2023

FISHERIES EXPERIMENT STATION
UTAH DIVISION OF WILDLIFE RESOURCES
1465 WEST 200 NORTH
LOGAN, UTAH 84321

UTAH DNR WILDLIFE RESOURCES

McMillen

Blue Stakes of UTAH 811 Bluestakes.org

WARN WATER AQUACULTURE BUILDING
LOGAN HATCHERY IMPROVEMENT PROJECT

HATCHERY BUILDING MODULE 2 RAS AREA LIGHTING PLAN

PROJECT NO: 14-23-0005
SHEET NO: E105
DATE: 10-2023
PAGE NO: 122

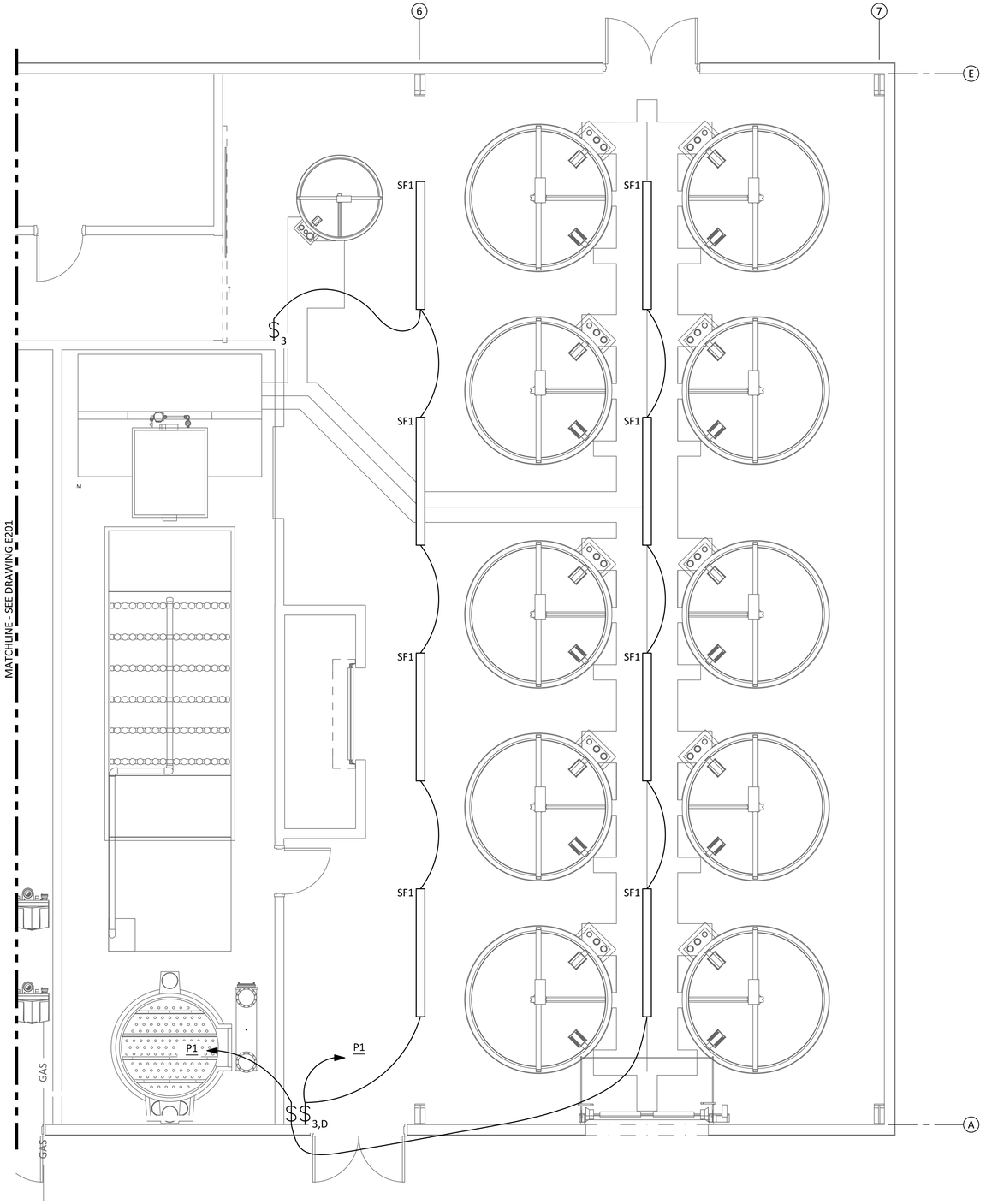

1 E100 MODULE 3 RAS AREA LIGHTING PLAN
SCALE: 1/4"= 1'-0"

SHEET NOTES:

1. DIMMER SWITCH ARE 0-10V TYPE COMPATIBLE WITH LUMINAIRE. SWITCH SHALL HAVE SOFT START FEATURE TO SLOWLY RAMP LIGHT OUTPUT.

REVIEWED FOR CODE COMPLIANCE
Thomas W Peterson
12/14/2023
DIVISION OF FACILITIES CONSTRUCTION AND MANAGEMENT
DFCM CODE COMPLIANCE OFFICER

NO.	REVISIONS	BY	DATE
C	100% DESIGN REVIEW	JT	10/23
B	90% DESIGN REVIEW	JT	9/23
A	50% DESIGN REVIEW	JT	5/23

This document or any part thereof in detail or design concept is the property of Forsgren Associates Inc. and shall not be copied without the written authorization of Forsgren Associates Inc.

DRAWN DJ
DESIGNED MEC
APPROVED
QA MLL

ATTENTION
LINE IS 2-INCHES AT 24"x36" SIZE
IF NOT 2-INCHES, SCALE DRAWING ACCORDINGLY

PROFESSIONAL ENGINEER
No. 9428479-2202
MATHEW LEWIS LAWSON
STATE OF UTAH
10/04/2023

FISHERIES EXPERIMENT STATION
UTAH DIVISION OF WILDLIFE RESOURCES
1465 WEST 200 NORTH
LOGAN, UTAH 84321

UTAH DNR WILDLIFE RESOURCES

McMillen

Blue Stakes of UTAH 811 Bluestakes.org

WARN WATER AQUACULTURE BUILDING
LOGAN HATCHERY IMPROVEMENT PROJECT
HATCHERY BUILDING MODULE 3 RAS AREA LIGHTING PLAN

PROJECT NO: 14-23-0005
SHEET NO: E106
DATE: 10-2023
PAGE NO: 123

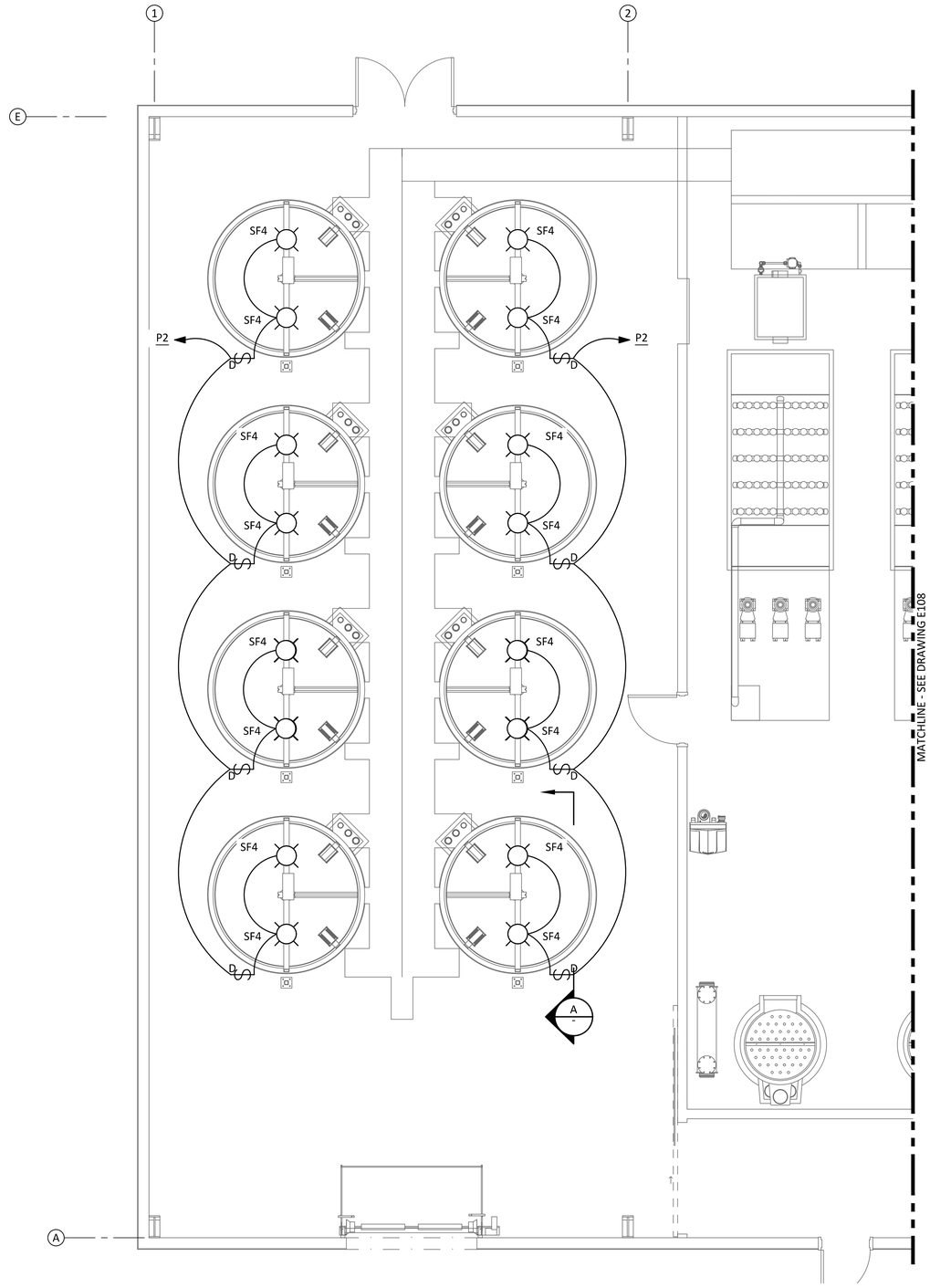

1 E100 MODULE 1 RAS TANK LIGHTING PLAN
SCALE: 1/4"= 1'-0"
0' 4' 8'

SHEET NOTES:

1. DIMMER SWITCH ARE 0-10V TYPE COMPATIBLE WITH LUMINAIRE. SWITCH SHALL HAVE SOFT START FEATURE TO SLOWLY RAMP LIGHT OUTPUT. INSTALL WITHIN WEATHERPROOF ENCLOSURE.
2. TANK LIGHT FIXTURES MOUNTED DIRECTLY UNDERNEATH CABLE TRAY ABOVE TANKS. LOCATE DIMMER SWITCH ON PIPING SUPPORT CHANNEL ADJACENT TO EACH TANK.

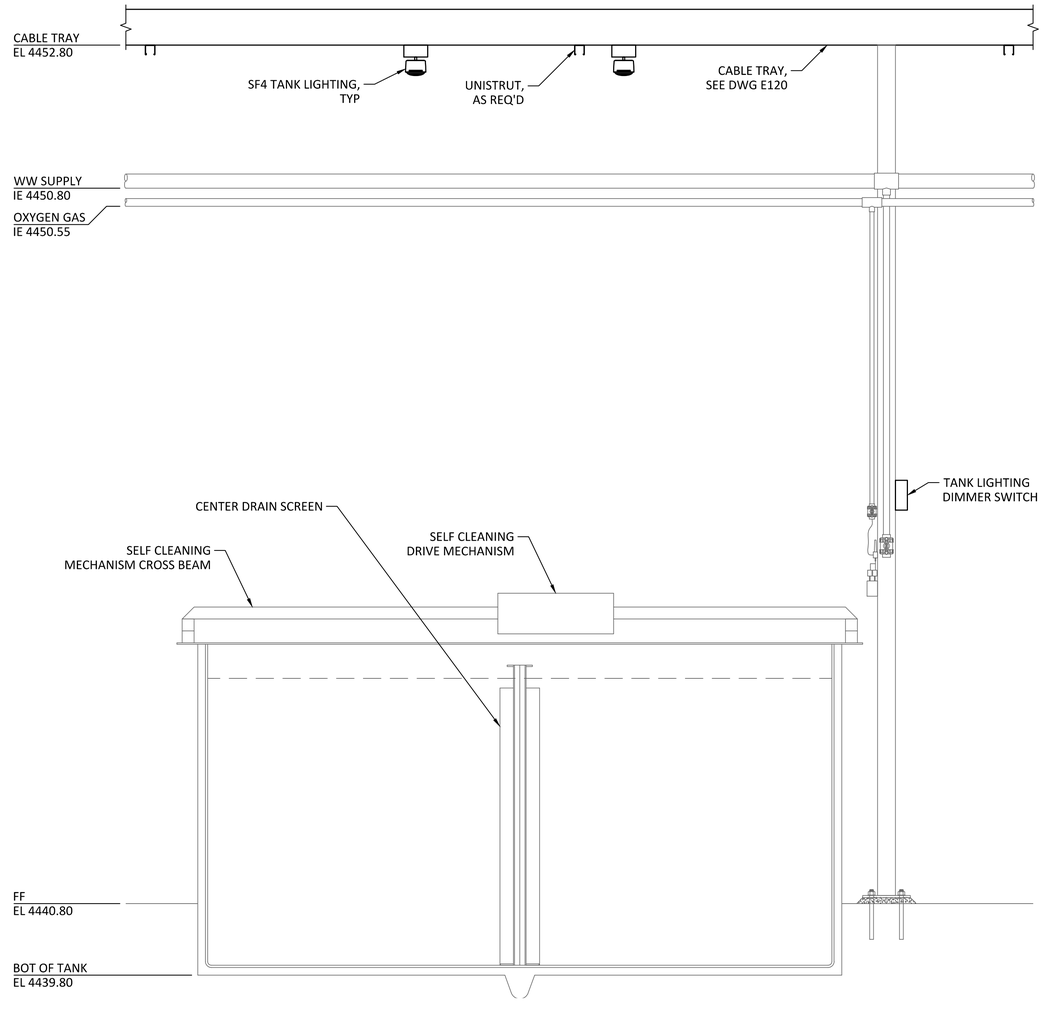

A - TYPICAL TANK LAYOUT SECTION
SCALE: 1"= 1'-0"
0' 1' 2'

REVIEWED FOR CODE COMPLIANCE
Thomas W Peterson
12/14/2023
DIVISION OF FACILITIES CONSTRUCTION AND MANAGEMENT

DFCM CODE COMPLIANCE OFFICER

NO.	REVISIONS	BY	DATE
	PUBLISHED		
C	100% DESIGN REVIEW	JT	10/23
B	90% DESIGN REVIEW	JT	9/23
A	50% DESIGN REVIEW	JT	5/23

This document or any part thereof in detail or design concept is the property of Forsgren Associates Inc. and shall not be copied without the written authorization of Forsgren Associates Inc.

DRAWN DJ
DESIGNED MEC
APPROVED
QA MLL

ATTENTION
LINE IS 2-INCHES
AT 24"x36" SIZE
IF NOT 2-INCHES, SCALE DRAWING ACCORDINGLY

PROFESSIONAL ENGINEER
No. 9428479-2202
MATHEW LEWIS LAWSON
STATE OF UTAH
10/04/2023

FISHERIES EXPERIMENT STATION
UTAH DIVISION OF WILDLIFE RESOURCES
1465 WEST 200 NORTH
LOGAN, UTAH 84321

UTAH DNR WILDLIFE RESOURCES

McMillen

Blue Stakes of UTAH 811 bluestakes.org

WARN WATER AQUACULTURE BUILDING
LOGAN HATCHERY IMPROVEMENT PROJECT
HATCHERY BUILDING MODULE 1 RAS TANK LIGHTING PLAN

PROJECT NO: 14-23-0005
SHEET NO: E107
DATE: 10-2023
PAGE NO: 124

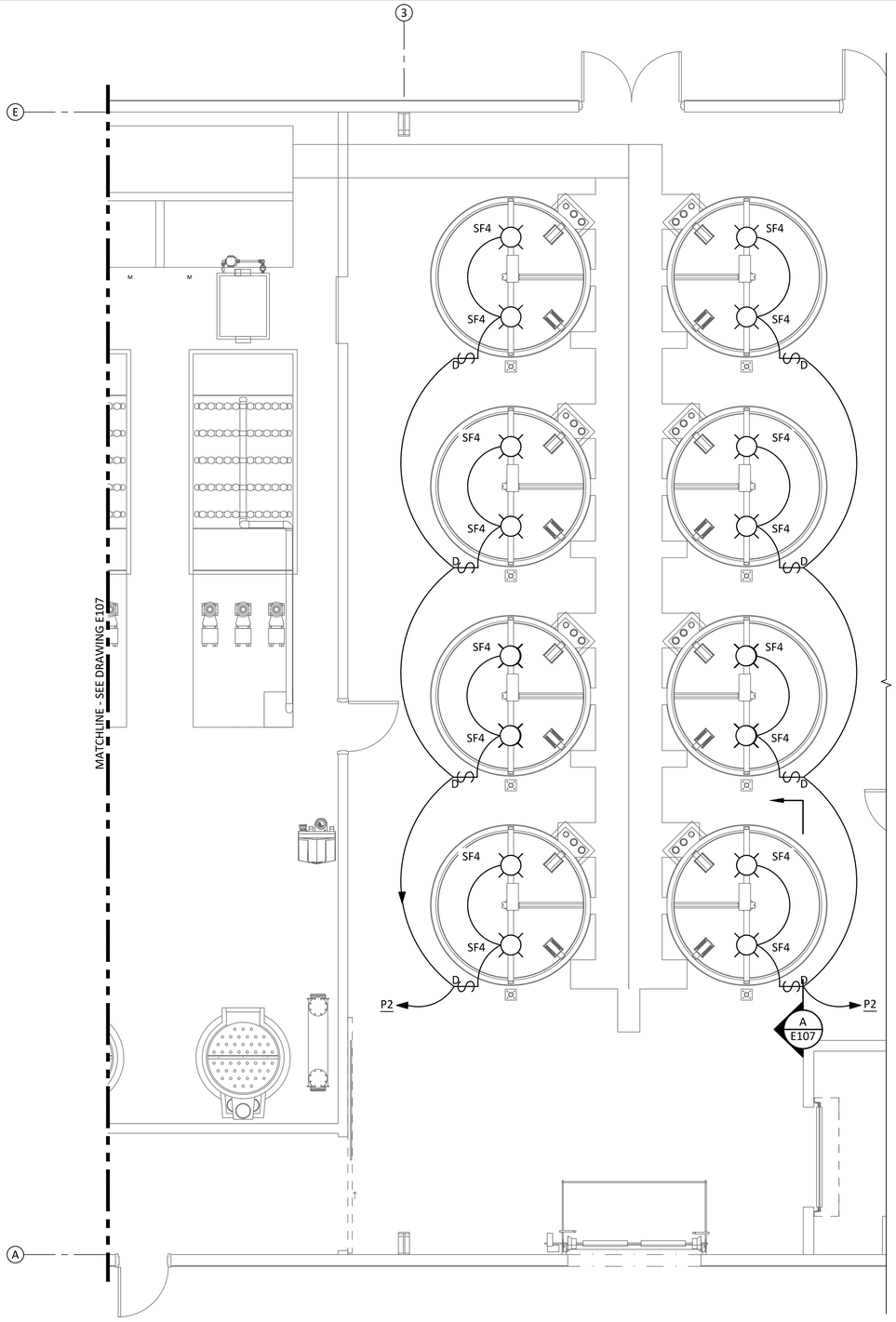

1 E100 MODULE 2 RAS TANK LIGHTING PLAN

SCALE: 1/4"= 1'-0"

0' 4' 8'

SHEET NOTES:

1. DIMMER SWITCH ARE 0-10V TYPE COMPATIBLE WITH LUMINAIRE. SWITCH SHALL HAVE SOFT START FEATURE TO SLOWLY RAMP LIGHT OUTPUT. INSTALL WITHIN WEATHERPROOF ENCLOSURE.
2. TANK LIGHT FIXTURES MOUNTED DIRECTLY UNDERNEATH CABLE TRAY ABOVE TANKS. LOCATE DIMMER SWITCH ON PIPING SUPPORT CHANNEL ADJACENT TO EACH TANK.

REVIEWED FOR CODE COMPLIANCE
Thomas W Peterson
12/14/2023
DIVISION OF FACILITIES CONSTRUCTION AND MANAGEMENT

DFCM CODE COMPLIANCE OFFICER

NO.	REVISIONS	BY	DATE
	PUBLISHED		
C	100% DESIGN REVIEW	JT	10/23
B	90% DESIGN REVIEW	JT	9/23
A	50% DESIGN REVIEW	JT	5/23

This document or any part thereof in detail or design concept is the property of Forsgren Associates Inc. and shall not be copied without the written authorization of Forsgren Associates Inc.

DRAWN DJ
DESIGNED MEC
APPROVED
QA MLL

ATTENTION
LINE IS 2-INCHES
AT 24"x36" SIZE
IF NOT 2-INCHES, SCALE DRAWING ACCORDINGLY

PROFESSIONAL ENGINEER
No. 9428479-2202
MATHEW LEWIS LAWSON
STATE OF UTAH
10/04/2023

FISHERIES EXPERIMENT STATION
UTAH DIVISION OF WILDLIFE RESOURCES
1465 WEST 200 NORTH
LOGAN, UTAH 84321

UTAH DNR WILDLIFE RESOURCES

McMillen

Blue Stakes of UTAH 811 Bluestakes.org

WARN WATER AQUACULTURE BUILDING
LOGAN HATCHERY IMPROVEMENT PROJECT
HATCHERY BUILDING MODULE 2 RAS TANK LIGHTING PLAN

PROJECT NO: 14-23-0005
SHEET NO: E108
DATE: 10-2023
PAGE NO: 125

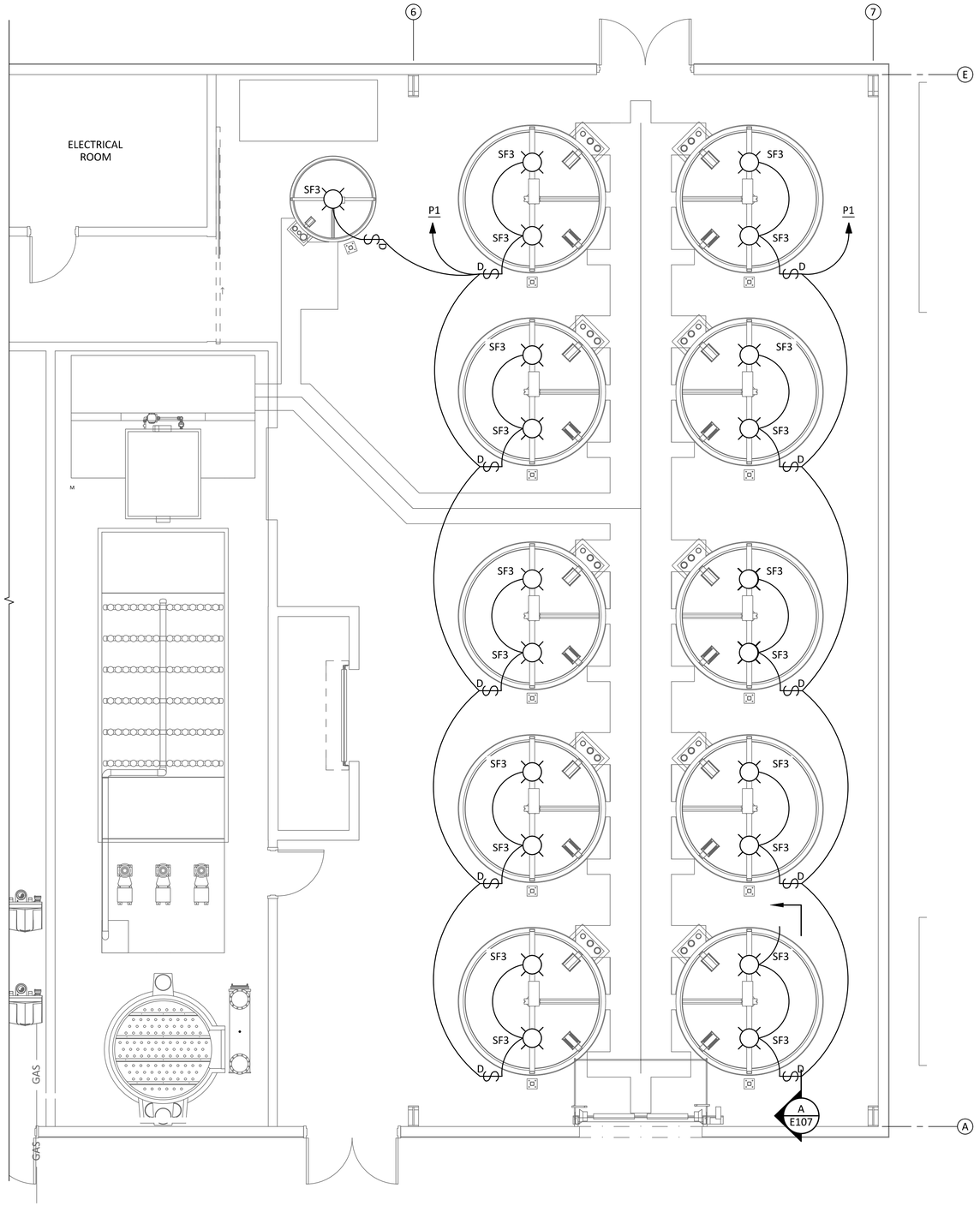

1 E100 MODULE 2 RAS TANK LIGHTING PLAN

SCALE: 1/4"= 1'-0"

0' 4' 8'

SHEET NOTES:

1. DIMMER SWITCH ARE AMPLITUDE/PHASE SHIFT TYPE COMPATIBLE WITH LUMINAIRE. SWITCH SHALL HAVE SOFT START FEATURE TO SLOWLY RAMP LIGHT OUTPUT. INSTALL WITHIN WEATHERPROOF ENCLOSURE.
2. TANK LIGHT FIXTURES MOUNTED DIRECTLY UNDERNEATH CABLE TRAY ABOVE TANKS. LOCATE DIMMER SWITCH ON PIPING SUPPORT CHANNEL ADJACENT TO EACH TANK.

REVIEWED FOR CODE COMPLIANCE
Thomas W Peterson
12/1/2023
DIVISION OF FACILITIES CONSTRUCTION AND MANAGEMENT

DFCM CODE COMPLIANCE OFFICER

NO.	REVISIONS	BY	DATE
	PUBLISHED		
C	100% DESIGN REVIEW	JT	10/23
B	90% DESIGN REVIEW	JT	9/23
A	50% DESIGN REVIEW	JT	5/23

This document or any part thereof in detail or design concept is the property of Forsgren Associates Inc. and shall not be copied without the written authorization of Forsgren Associates Inc.

DRAWN DJ
DESIGNED MEC
APPROVED
QA MLL

ATTENTION
LINE IS 2-INCHES AT 24"x36" SIZE
IF NOT 2-INCHES, SCALE DRAWING ACCORDINGLY

PROFESSIONAL ENGINEER
No. 9428479-2202
MATHEW LEWIS LAWSON
STATE OF UTAH
10/04/2023

FISHERIES EXPERIMENT STATION
UTAH DIVISION OF WILDLIFE RESOURCES
1465 WEST 200 NORTH
LOGAN, UTAH 84321

UTAH DNR WILDLIFE RESOURCES

McMillen

Blue Stakes of UTAH 811 Bluestakes.org

WARN WATER AQUACULTURE BUILDING
LOGAN HATCHERY IMPROVEMENT PROJECT
HATCHERY BUILDING MODULE 3 RAS TANK LIGHTING PLAN

PROJECT NO: 14-23-0005
SHEET NO: E109
DATE: 10-2023
PAGE NO: 126

SHEET NOTES:

1. TWO LAYER CABLE TRAY 18" X 6", SEPARATED BY 10". TOP LAYER DESIGNATED FOR CONTROL, AND LOWER LAYER FOR POWER CABLES. MOUNT AT 13' AFF. 2'-0" MAXIMUM BETWEEN HANGERS.
2. SINGLE LAYER CABLE TRAY, 12" WIDE WITH 6" SEPARATED RUNGS. CABLE TRAY FOR SIGNAL AND LOW POWER CIRCUITS. MOUNT AT 12' AFF. 2'-0" MAXIMUM BETWEEN HANGERS.
3. SINGLE LAYER CABLE TRAY, 18" X 6". POWER CABLE ONLY. MOUNT AT 13' AFF. 2'-0" MAXIMUM BETWEEN HANGERS.

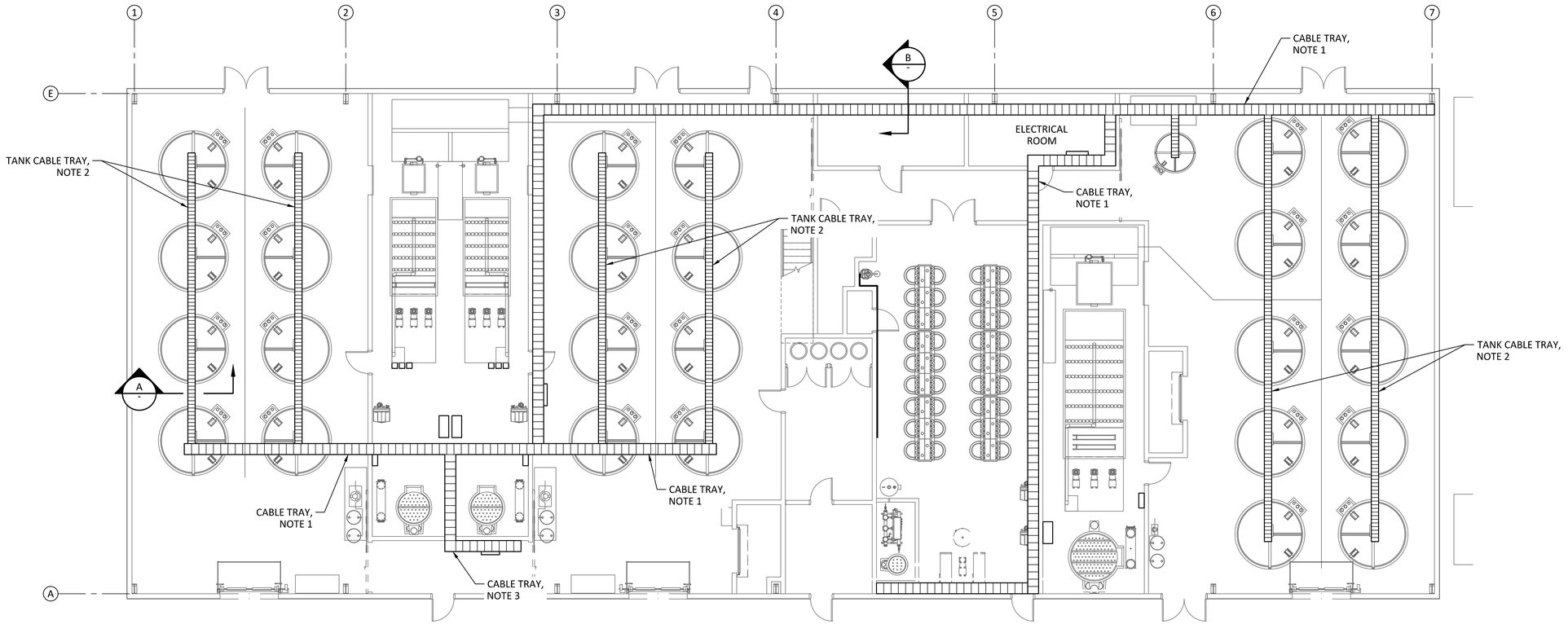

ELECTRICAL CABLE TRAY LAYOUT

SCALE: 1/8"= 1'-0"

0' 8' 16'

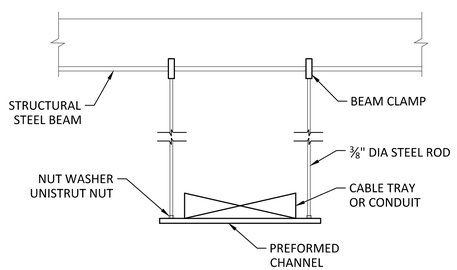

A - CABLE TRAY MOUNTING SECTION - SINGLE LAYER

SCALE: 1"= 1'-0"

0' 1' 2'

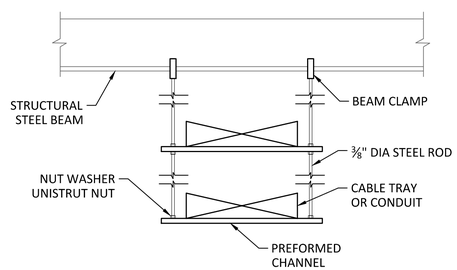

B - CABLE TRAY MOUNTING SECTION - TWO LAYER

SCALE: 1"= 1'-0"

0' 1' 2'

REVIEWED FOR CODE COMPLIANCE
Thomas W Peterson
12/14/2023
DIVISION OF FACILITIES CONSTRUCTION AND MANAGEMENT

DFCM CODE COMPLIANCE OFFICER

NO.	REVISIONS	BY	DATE
	PUBLISHED		
C	100% DESIGN REVIEW	JT	10/23
B	90% DESIGN REVIEW	JT	9/23
A	50% DESIGN REVIEW	JT	5/23

This document or any part thereof in detail or design concept is the property of Forsgren Associates Inc. and shall not be copied without the written authorization of Forsgren Associates Inc.

DRAWN DJ
DESIGNED MEC
APPROVED
QA MLL

ATTENTION
LINE IS 2-INCHES
AT 24"x36" SIZE
IF NOT 2-INCHES, SCALE DRAWING ACCORDINGLY

PROFESSIONAL ENGINEER No. 9428479-2202 MATHEW LEWIS LAWSON STATE OF UTAH
10/04/2023

FISHERIES EXPERIMENT STATION
UTAH DIVISION OF WILDLIFE RESOURCES
1465 WEST 200 NORTH
LOGAN, UTAH 84321

UTAH DNR WILDLIFE RESOURCES

McMillen

Blue Stakes of UTAH 811 Bluestakes.org

WARN WATER AQUACULTURE BUILDING
LOGAN HATCHERY IMPROVEMENT PROJECT

HATCHERY BUILDING
CABLE TRAY LAYOUT

PROJECT NO: 14-23-0005
SHEET NO: E120
DATE: 10-2023
PAGE NO: 127

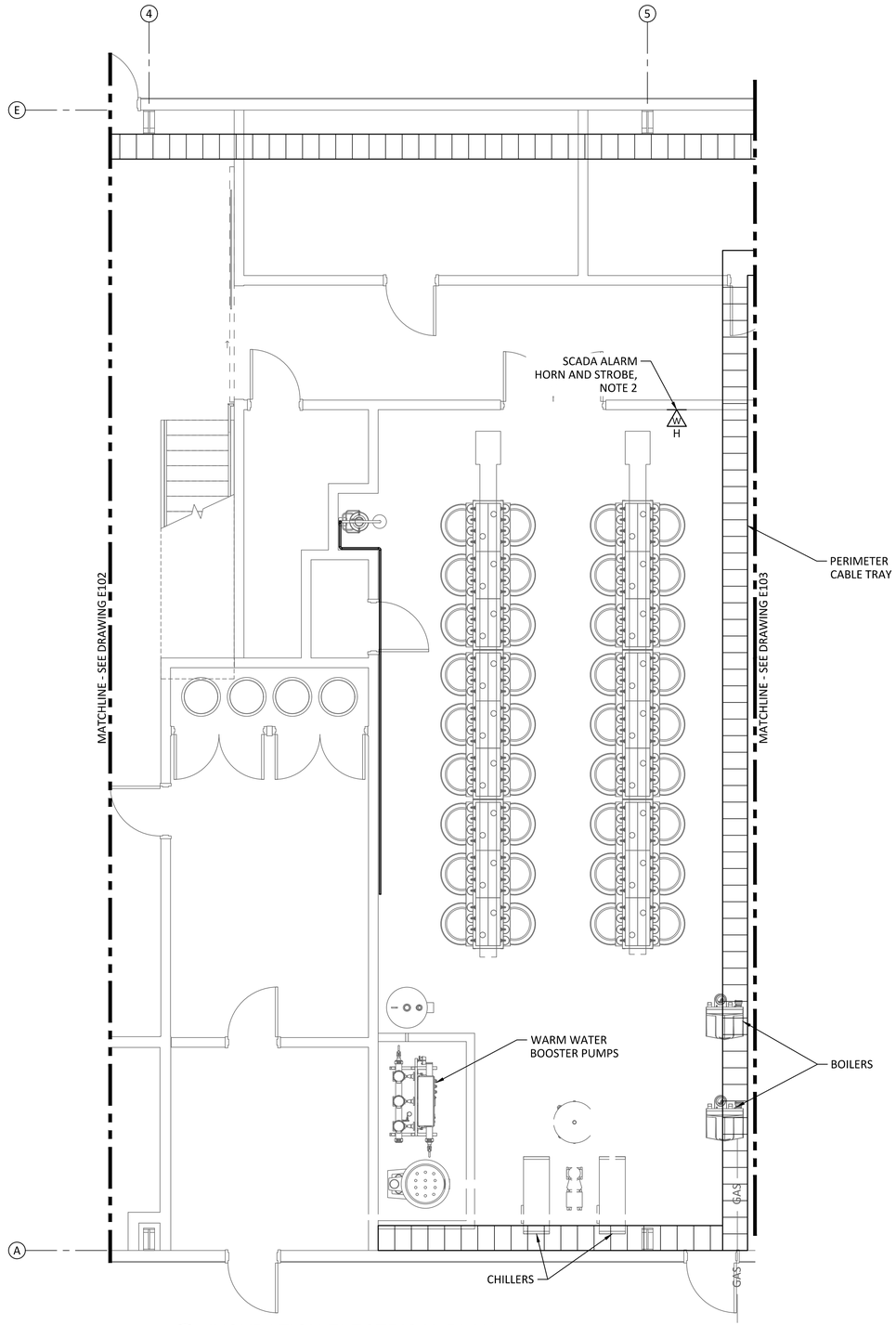

1 E100 INCUBATION ELECTRICAL PLAN

SCALE: 1/4"= 1'-0"

0' 4' 8'

SHEET NOTES:

1. ONLY EMBEDDED CONDUIT SHOWN, ALL OTHERS ARE SURFACE MOUNTED. ROUTE SURFACE MOUNT AS NECESSARY. SEE CONDUIT SCHEDULE FOR DETAILS.
2. SCADA ALARM HORN AND STROBE CONFIGURED TO PROVIDE AUDITORY AND VISUAL ALERT ONLY DURING BUSINESS HOURS.

REVIEWED FOR CODE COMPLIANCE
Thomas W Peterson
12/14/2023
DIVISION OF FACILITIES CONSTRUCTION AND MANAGEMENT

DFCM CODE COMPLIANCE OFFICER

NO.	REVISIONS	BY	DATE
	PUBLISHED		
C	100% DESIGN REVIEW	JT	10/23
B	90% DESIGN REVIEW	JT	9/23
A	50% DESIGN REVIEW	JT	5/23

This document or any part thereof in detail or design concept is the property of Forsgren Associates Inc. and shall not be copied without the written authorization of Forsgren Associates Inc.

DRAWN DJ
DESIGNED MEC
APPROVED
QA MLL

ATTENTION
LINE IS 2-INCHES
AT 24"x36" SIZE
IF NOT 2-INCHES, SCALE DRAWING ACCORDINGLY

PROFESSIONAL ENGINEER
No. 9428479-2202
MATHEW LEWIS
LAWSON
STATE OF UTAH
10/04/2023

FISHERIES EXPERIMENT STATION
UTAH DIVISION OF WILDLIFE RESOURCES
1465 WEST 200 NORTH
LOGAN, UTAH 84321

UTAH DNR WILDLIFE RESOURCES

McMillen

Blue Stakes of UTAH 811 Bluestakes.org

WARN WATER AQUACULTURE BUILDING
LOGAN HATCHERY IMPROVEMENT PROJECT
HATCHERY BUILDING INCUBATION ELECTRICAL PLAN

PROJECT NO: 14-23-0005
SHEET NO: E200
DATE: 10-2023
PAGE NO: 128

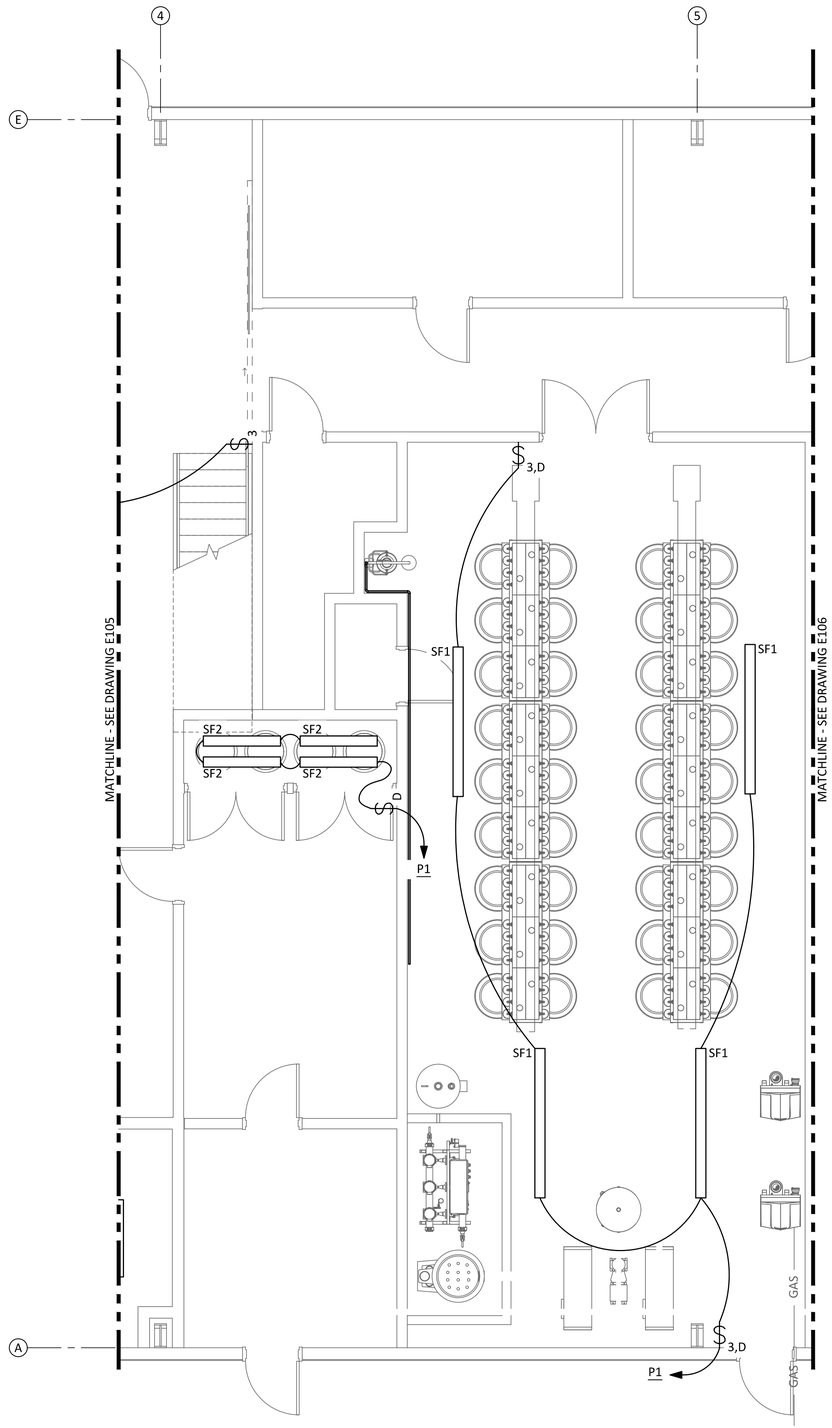

3 / E100 INCUBATION AREA LIGHTING PLAN

SCALE: 1/4"= 1'-0"

0' 4' 8'

SHEET NOTES:

1. DIMMER SWITCH ARE 0-10V TYPE COMPATIBLE WITH LUMINAIRE. SWITCH SHALL HAVE SOFT START FEATURE TO SLOWLY RAMP LIGHT OUTPUT.

REVIEWED FOR CODE COMPLIANCE
Thomas W Peterson
12/14/2023
DIVISION OF FACILITIES CONSTRUCTION AND MANAGEMENT

DFCM CODE COMPLIANCE OFFICER

NO.	REVISIONS	BY	DATE
	PUBLISHED		
C	100% DESIGN REVIEW	JT	10/23
B	90% DESIGN REVIEW	JT	9/23
A	50% DESIGN REVIEW	JT	5/23

This document or any part thereof in detail or design concept is the property of Forsgren Associates Inc. and shall not be copied without the written authorization of Forsgren Associates Inc.

DRAWN DJ
DESIGNED MEC
APPROVED
QA MLL

ATTENTION
LINE IS 2-INCHES
AT 24"x36" SIZE
IF NOT 2-INCHES, SCALE DRAWING ACCORDINGLY

PROFESSIONAL ENGINEER
No. 9428479-2202
MATHEW LEWIS LAWSON
STATE OF UTAH
10/04/2023

FISHERIES EXPERIMENT STATION
UTAH DIVISION OF WILDLIFE RESOURCES
1465 WEST 200 NORTH
LOGAN, UTAH 84321

UTAH DNR WILDLIFE RESOURCES

McMillen

Blue Stakes of UTAH 811 Bluestakes.org

WARN WATER AQUACULTURE BUILDING
LOGAN HATCHERY IMPROVEMENT PROJECT
HATCHERY BUILDING INCUBATION AREA LIGHTING PLAN

PROJECT NO: 14-23-0005
SHEET NO: E201
DATE: 10-2023
PAGE NO: 129

SHEET NOTES:

1. MODBUS RTU COMMUNICATION WIRING CONSISTS OF DAISY CHAINED MODBUS RS485 CONNECTIONS.

LEGEND:

AI	ANALOG INPUT
AO	ANALOG OUTPUT
DF	DRUM FILTER
DI	DISCRETE INPUT
DO	DISCRETE OUTPUT
DO2	DISSOLVED OXYGEN SENSOR
FM	FLOW METER
HMI	HUMAN MACHINE INTERFACE
MB	MODBUS GATEWAY
NSW	ETHERNET NETWORK SWITCH
PLC	PROGRAMMABLE LOGIC CONTROLLER
RIO	REMOTE INPUT/OUTPUT CHASSIS
TCP	TRANSMISSION CONTROL PROTOCOL
UV	ULTRA VIOLATE LIGHT
VFD	VARIABLE FREQUENCY DRIVE

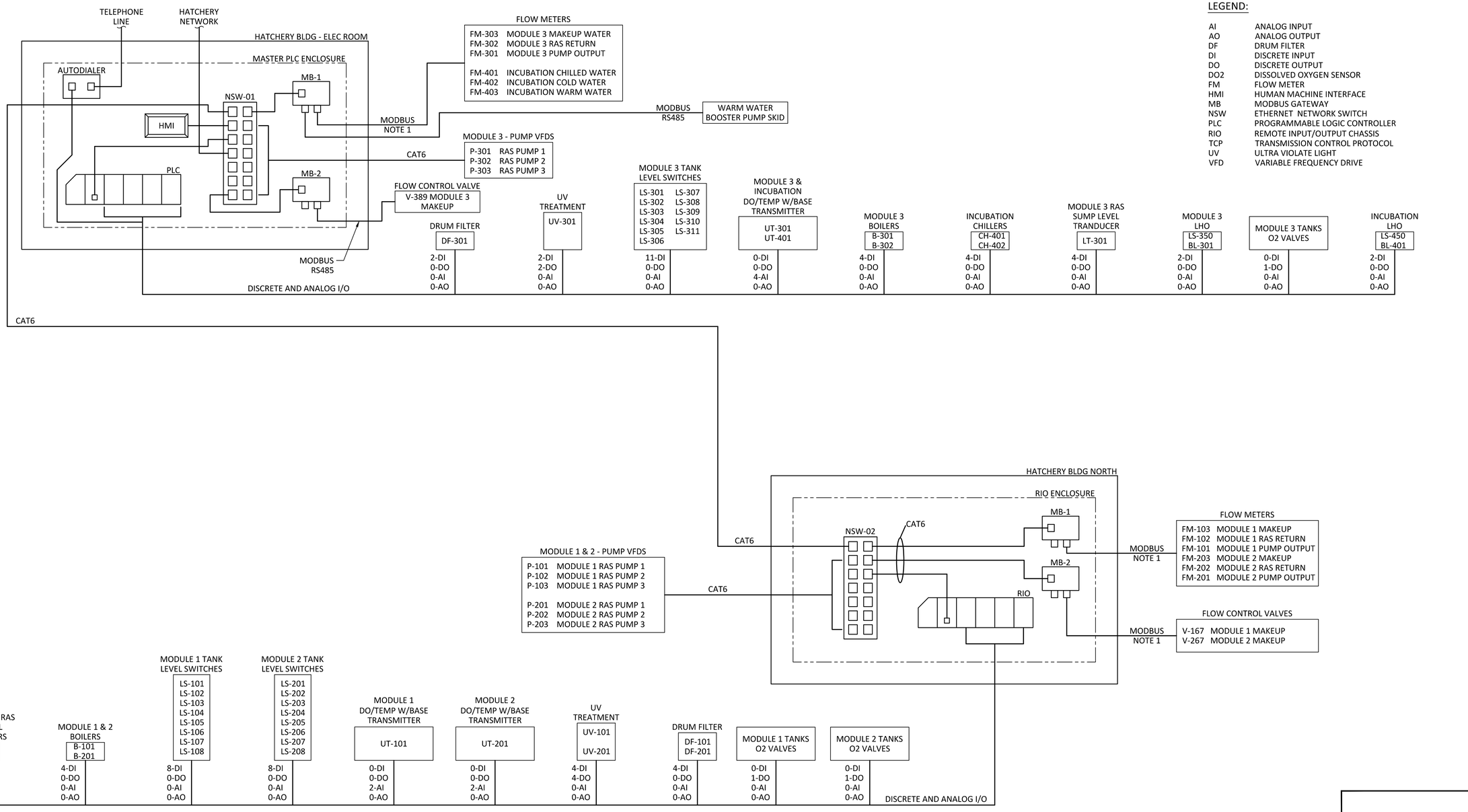

REVIEWED FOR CODE COMPLIANCE
Thomas W Peterson
12/14/2023
DIVISION OF FACILITIES CONSTRUCTION AND MANAGEMENT

DFCM CODE COMPLIANCE OFFICER

	PUBLISHED		
C	100% DESIGN REVIEW	JT	10/23
B	90% DESIGN REVIEW	JT	9/23
A	50% DESIGN REVIEW	JT	5/23
NO.	REVISIONS	BY	DATE

This document or any part thereof in detail or design concept is the property of Forsgren Associates Inc. and shall not be copied without the written authorization of Forsgren Associates Inc.

DRAWN DJ
DESIGNED MEC
APPROVED
QA MLL

ATTENTION
LINE IS 2-INCHES
AT 24"x36" SIZE
IF NOT 2-INCHES, SCALE DRAWING ACCORDINGLY

PROFESSIONAL ENGINEER
No. 9428479-2202
MATHEW LEWIS LAWSON
STATE OF UTAH
10/04/2023

FISHERIES EXPERIMENT STATION
UTAH DIVISION OF WILDLIFE RESOURCES
1465 WEST 200 NORTH
LOGAN, UTAH 84321

UTAH DNR WILDLIFE RESOURCES

McMillen

Blue Stakes of UTAH 811 Bluestakes.org

WARN WATER AQUACULTURE BUILDING
LOGAN HATCHERY IMPROVEMENT PROJECT

SCADA BLOCK DIAGRAM

PROJECT NO: 14-23-0005
SHEET NO: E300
DATE: 10-2023
PAGE NO: 130

SHEET NOTES:

1. SEE DWG E302 FOR BILL OF MATERIALS AND NAMEPLATE LIST.
2. PLC SHALL BE 12-SLOT MODICON M340 CONTROLLER, SEE BILL OF MATERIALS FOR COMPLETE I/O ALLOTMENT.
3. INSTALL DOOR STOP, DOOR SWITCH AND ENCLOSURE LIGHT PER MANUFACTURER'S INSTRUCTIONS.

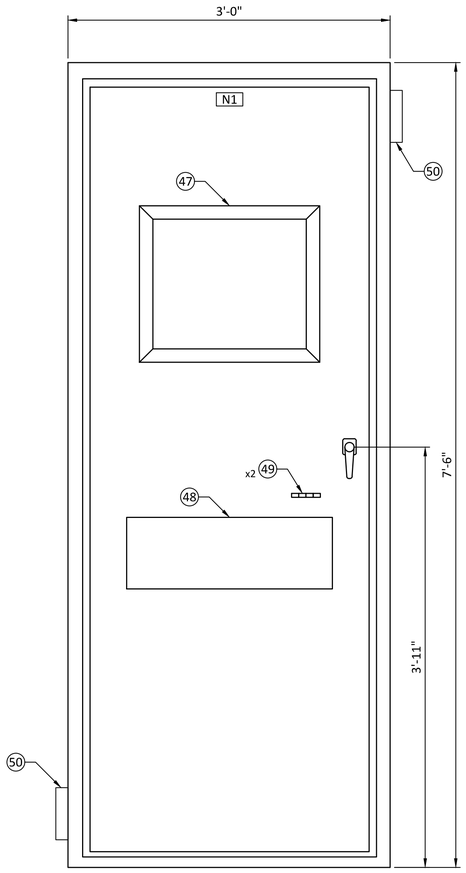

MASTER PLC ENCLOSURE - DOOR LAYOUT

SCALE: 1 1/2"= 1'-0"

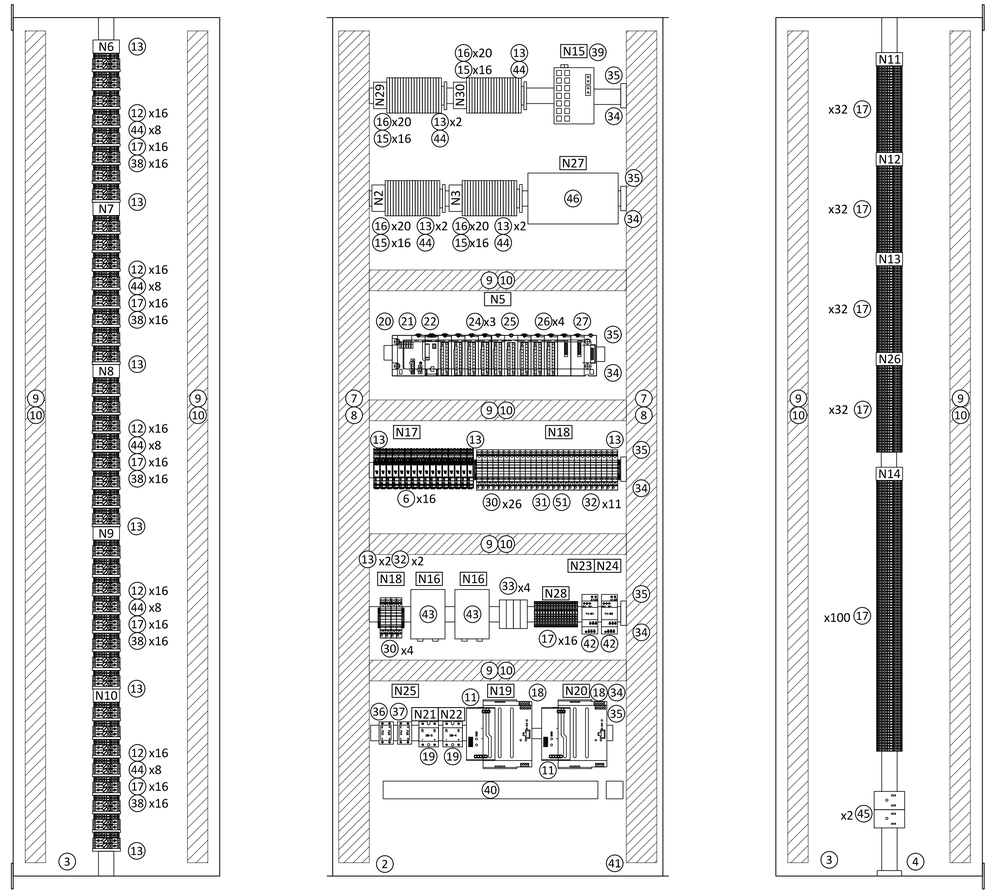

MASTER PLC ENCLOSURE - INTERNAL LAYOUT

SCALE: 1 1/2"= 1'-0"

MASTER PLC MODULE ARRANGEMENT

POWER SUPPLY	PROCESSOR	DI	DI	DI	DO	AI	AI	AI	AI	AO	SPARE	SPARE
SLOT	0	1	2	3	4	5	6	7	8	9	10	11

REVIEWED FOR CODE COMPLIANCE
Thomas W Peterson
12/14/2023
DIVISION OF FACILITIES CONSTRUCTION AND MANAGEMENT

DFCM CODE COMPLIANCE OFFICER

NO.	REVISIONS	BY	DATE
	PUBLISHED		
C	100% DESIGN REVIEW	JT	10/23
B	90% DESIGN REVIEW	JT	9/23
A	50% DESIGN REVIEW	JT	5/23

This document or any part thereof in detail or design concept is the property of Forsgren Associates Inc. and shall not be copied without the written authorization of Forsgren Associates Inc.

DRAWN DJ
DESIGNED MEC
APPROVED
QA MLL

ATTENTION
LINE IS 2-INCHES
AT 24"x36" SIZE
IF NOT 2-INCHES, SCALE DRAWING ACCORDINGLY

PROFESSIONAL ENGINEER
No. 9428479-2202
MATHEW LEWIS LAWSON
STATE OF UTAH
10/04/2023

FISHERIES EXPERIMENT STATION
UTAH DIVISION OF WILDLIFE RESOURCES
1465 WEST 200 NORTH
LOGAN, UTAH 84321

UTAH DNR WILDLIFE RESOURCES

McMillen

Blue Stakes of UTAH 811 Bluestakes.org

WARN WATER AQUACULTURE BUILDING
LOGAN HATCHERY IMPROVEMENT PROJECT
MASTER PLC I/O
PANEL LAYOUT

PROJECT NO: 14-23-0005
SHEET NO: E301
DATE: 10-2023
PAGE NO: 131

MASTER PLC BILL OF MATERIAL

ITEM	QTY	DESCRIPTION	MANUFACTURER	P/N
1	1	ENCLOSURE, SINGLE DOOR, 90"H X 36"W X 24"D	HAMMOND	1418YY24
2	1	BACK PANEL 90"H X 36"W	HAMMOND	90XFW
3	2	SIDE PANELS 90"H X 24"W	HAMMOND	90FD20
4	1	REMOTE DOOR SWITCH	HAMMOND	FLKDS
5	1	ENCLOSURE LIGHT	HAMMOND	FLK24T8
6	16	RELAY, TERMINAL BLOCK	ALLEN BRADLEY	700-HLT12Z24
7	A/R	WIRE DUCT, 3"W X 3"H	PANDUIT	F3X3LG6
8	A/R	WIRE DUCT COVER, 3"W	PANDUIT	C3LG6
9	A/R	WIRE DUCT, 2"W X 3"H	PANDUIT	F2X3LG6
10	A/R	WIRE DUCT COVER, 2"W	PANDUIT	C2LG6
11	2	POWER SUPPLY - QUINT4-PS/1AC/24DC/10A	PHOENIX	2904601
12	80	FUSE HOLDER, UK10-DREHSILA	PHOENIX	3005662
13	18	END CLAMP, E/NS	PHOENIX	0804376
14	A/R	TERMINAL MARKER, UBE/D	PHOENIX	800307
15	64	SURGE PROTECTION, TERMINTRAB, 24VDC MOV, ST-BC	PHOENIX	2788391
16	80	TERMINAL BLOCK, BASE FOR SURGE PROTECTION, TT-UKK5-T BE	PHOENIX	2788401
17	324	TERMINAL BLOCK, KNIFE SW, UT 4-MTL	PHOENIX	3046144
18	2	UPS, 24VDC	PHOENIX	2320267
19	2	BRIDGE, DIODE RECTIFIER, 80A	NTE	NTE 5346
20	1	PLC CHASSIS, 12 SLOT	SCHNEIDER ELECTRIC	BMXXBP1200
21	1	PLC POWER SUPPLY	SCHNEIDER ELECTRIC	BMXCPS3020
22	1	PLC PROCESSOR	SCHNEIDER ELECTRIC	BMXP342020
23	1	DOOR STOP	HAMMOND	DSTOPK
24	3	DIGITAL INPUT MODULE	SCHNEIDER ELECTRIC	BMXDDI1602
25	1	DIGITAL OUTPUT MODULE	SCHNEIDER ELECTRIC	BMXDDO1602
26	4	ANALOG INPUT MODULE	SCHNEIDER ELECTRIC	BMXAMI0800
27	1	ANALOG OUTPUT MODULE	SCHNEIDER ELECTRIC	BMXAMO0802

MASTER PLC BILL OF MATERIAL

ITEM	QTY	DESCRIPTION	MANUFACTURER	P/N
28	4	DISCRETE I/O CABLE ASSEMBLY	SCHNEIDER ELECTRIC	BMXFTW301
29	5	ANALOG I/O CABLE ASSEMBLY	SCHNEIDER ELECTRIC	BMXFTW301S
30	28	BASE, CIRCUIT BREAKER, ELEMENT, CB 1/10-1/10 UT-BE	PHOENIX	2801305
31	1	CIRCUIT BREAKER, 16 A	PHOENIX	2800889
32	12	CIRCUIT BREAKER, 2 A	PHOENIX	2800870
33	4	DB9 FEMALE BREAKOUT CONNECTOR	PHOENIX	2315162
34	A/R	DIN RAIL, TS35	WEIMULLER	514570000
35	6	TB, GROUNDING, USLK535, DIN RAIL	PHOENIX	444019
36	2	FUSE HOLDER, 600 VAC, CLASS CC, 1-POLE	LITTELFUSE	LFPSM001
37	8	FUSE, CLASS CC 10A (INCLUDE SPARES)	LITTELFUSE	KLKR010
38	90	FUSE, 0.315A (INCLUDING SPARES)	LITTELFUSE	508.315
39	1	SWITCH, NETWORK, 16 PORT, 2-MM FIBER	MOXA	EDS-516A-MM-SC
40	1	GROUND BUS, 2" COPPER		
41	1	PANEL GROUNDING		
42	2	RELAY, VOLTAGE	BENDER	VME420
43	2	GATEWAY, MODBUS, SERIAL TO TCP	MOXA	MB3280
44	44	GROUND TERMINAL BLOCK TYPE VT 2.5-PE	PHOENIX	3044092
45	2	120 VAC DIN RAIL OUTLET	PHOENIX	804165
46	1	AUTO DIALER, 8-CHANNEL, WITH BATTERY BACKUP	OMEGA ENGINEERING	OMA-VM606
47	1	PC TOUCH SCREEN, SOLID STATE, INDUSTRIAL GRADE 16:9 PANEL, 18.5", 1920X1080, INTEL CORE I7-11850HE, 32GB RAM, 512GB SSD, WINDOWS 11, 24VDC	WONDERWARE/ NEMATRON/ COMARK	IPC-1850T-I7-32GB-512SS-W1164-DC
48	1	FULL TRAVEL WALL MOUNT KEYBOARD WITH TOUCH PAD	HOPE INSUT SYSTEMS, INC	KB-R3-WMT-BLK-4-USB
49	4	COUPLER, USB, SHIELDED, TYPE A, FEED-THROUGH	SHOWMECABLE.COM	SKU3524
50	2	LOUVER, TYPE 3R, KIT, 6.4"X6.3"	HAMMOND	1481L3R66GY
51	1	CIRCUIT BREAKER, 6A	PHOENIX	2800885

SHEET NOTES:

1. CONTRACTOR TO VERIFY MATERIAL QUANTITIES WHEN QUOTING. CONTRACTOR TO PROVIDE ALL NECESSARY MATERIAL TO PROVIDE THE FUNCTIONALITY DEPICTED IN THE DRAWINGS AND CALLED OUT IN THE SPECIFICATIONS.

NAMEPLATES				
N	QTY	ENGRAVING	DIMENSIONS	CHAR SIZE
1	1	MASTER PLC	8" X 3/4"	1/2"
2	1	TB-DI1A	2" X 3/4	1/4"
3	1	TB-DI2A	2" X 3/4	1/4"
4	1	NOT USED		
5	1	MASTER PLC	3" X 3/4	1/4"
6	1	TB-ANA	2" X 3/4	1/4"
7	1	TB-ANB	2" X 3/4	1/4"
8	1	TB-ANC	2" X 3/4	1/4"
9	1	TB-AND	2" X 3/4	1/4"
10	1	TB-ANE	2" X 3/4	1/4"
11	1	TB-DI1	2" X 3/4	1/4"
12	1	TB-DI2	2" X 3/4	1/4"
13	1	TB-DI3	2" X 3/4	1/4"
14	1	TB-R1	2" X 3/4	1/4"
15	1	NET SWS	2" X 3/4	1/4"
16	1	MB GATEWAY	3" X 3/4	1/4"
17	2	OUTPUT RELAYS	4" X 3/4	1/4"
18	2	CIRCUIT BKRS	3" X 3/4	1/4"
19	1	PS-1	1-1/4" X 3/4"	1/4"
20	1	PS-2	1-1/4" X 3/4"	1/4"
21	1	DIODE-1	2" X 3/4"	1/4"
22	1	DIODE-2	2" X 3/4"	1/4"
23	1	27-1	1" X 3/4"	1/4"
24	1	27-2	1" X 3/4"	1/4"
25	1	AC FUSE	2" X 3/4"	1/4"
26	1	TB-DI4	2" X 3/4"	1/4"
27	1	AUTO DIAL	2" X 3/4"	1/4"
28	1	TB-MB	2" X 3/4"	1/4"
29	1	TB-DI3A	2" X 3/4"	1/4"
30	1	TB-DI4A	2" X 3/4"	1/4"

REVIEWED FOR CODE COMPLIANCE
Thomas W Peterson
12/14/2023
DIVISION OF FACILITIES CONSTRUCTION AND MANAGEMENT
DFCM CODE COMPLIANCE OFFICER

NO.	REVISIONS	BY	DATE
C	100% DESIGN REVIEW	JT	10/23
B	90% DESIGN REVIEW	JT	9/23
A	50% DESIGN REVIEW	JT	5/23

PUBLISHED

This document or any part thereof in detail or design concept is the property of Forsgren Associates Inc. and shall not be copied without the written authorization of Forsgren Associates Inc.

DRAWN DJ
DESIGNED MEC
APPROVED
QA MLL

ATTENTION
LINE IS 2-INCHES
AT 24"x36" SIZE
IF NOT 2-INCHES, SCALE DRAWING ACCORDINGLY

PROFESSIONAL ENGINEER
No. 9428479-2202
MATHEW LEWIS LAWSON
STATE OF UTAH
10/04/2023

FISHERIES EXPERIMENT STATION
UTAH DIVISION OF WILDLIFE RESOURCES
1465 WEST 200 NORTH
LOGAN, UTAH 84321

UTAH DNR WILDLIFE RESOURCES

McMillen

Blue Stakes of UTAH 811 Bluestakes.org

WARN WATER AQUACULTURE BUILDING
LOGAN HATCHERY IMPROVEMENT PROJECT
MASTER PLC I/O
BILL OF MATERIALS

PROJECT NO: 14-23-0005
SHEET NO: E302
DATE: 10-2023
PAGE NO: 132

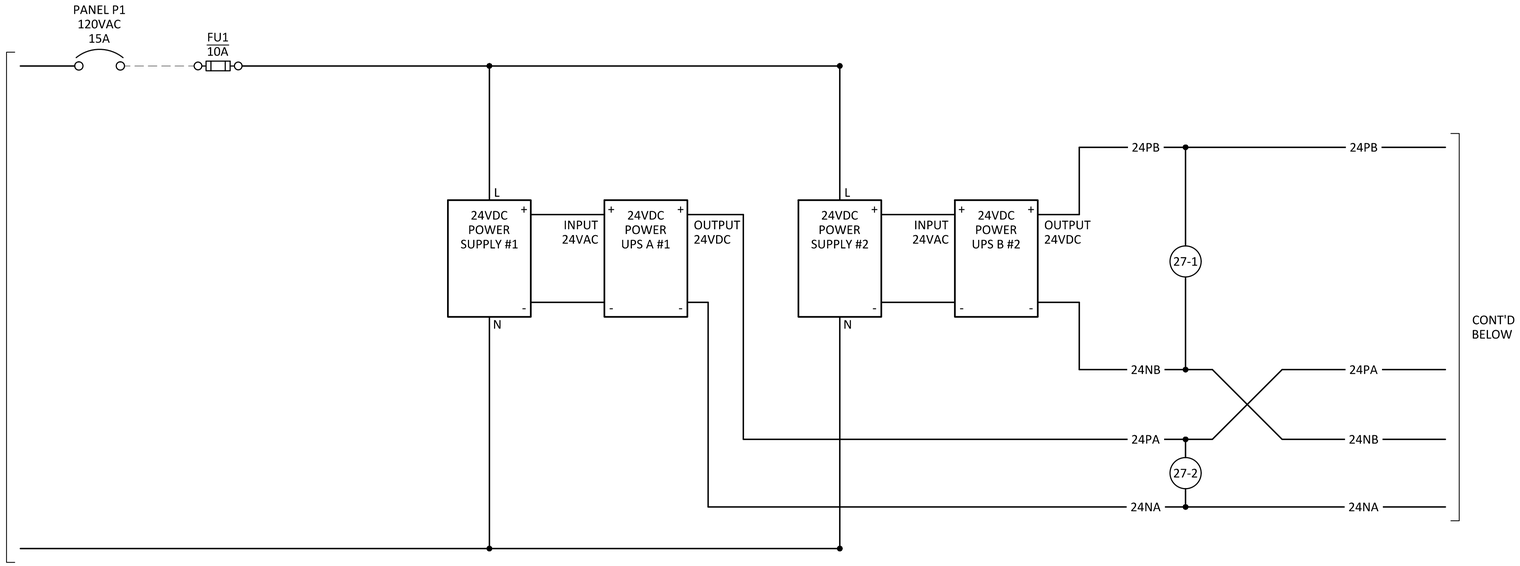

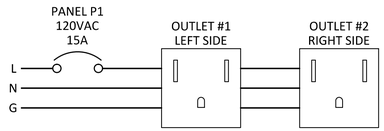

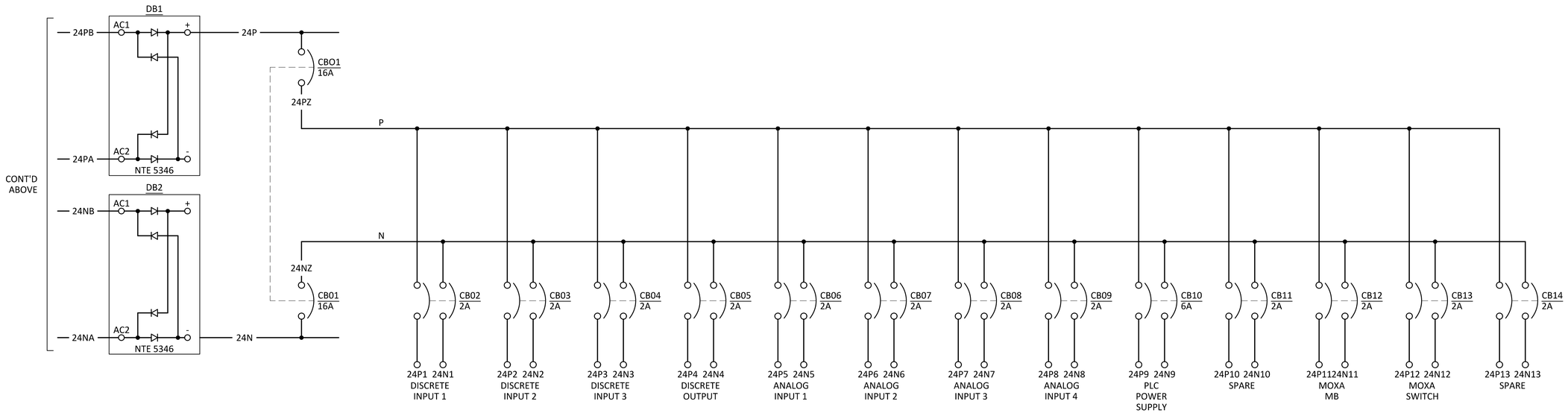

REVIEWED FOR CODE COMPLIANCE
Thomas W Peterson
12/14/2023
DIVISION OF FACILITIES CONSTRUCTION AND MANAGEMENT

DFCM CODE COMPLIANCE OFFICER

	PUBLISHED		
C	100% DESIGN REVIEW	JT	10/23
B	90% DESIGN REVIEW	JT	9/23
A	50% DESIGN REVIEW	JT	5/23
NO.	REVISIONS	BY	DATE

This document or any part thereof in detail or design concept is the property of Forsgren Associates Inc. and shall not be copied without the written authorization of Forsgren Associates Inc.

DRAWN DJ
DESIGNED MEC
APPROVED
QA MLL

ATTENTION
LINE IS 2-INCHES
AT 24"x36" SIZE
IF NOT 2-INCHES, SCALE DRAWING ACCORDINGLY

PROFESSIONAL ENGINEER
No. 9428479-2202
MATHEW LEWIS LAWSON
STATE OF UTAH
10/04/2023

FISHERIES EXPERIMENT STATION
UTAH DIVISION OF WILDLIFE RESOURCES
1465 WEST 200 NORTH
LOGAN, UTAH 84321

UTAH DNR WILDLIFE RESOURCES

McMillen

Blue Stakes of UTAH 811 Bluestakes.org

WARN WATER AQUACULTURE BUILDING
LOGAN HATCHERY IMPROVEMENT PROJECT

MASTER PLC I/O PANEL
24VDC POWER DISTRIBUTION

PROJECT NO: 14-23-0005
SHEET NO: E303
DATE: 10-2023
PAGE NO: 133

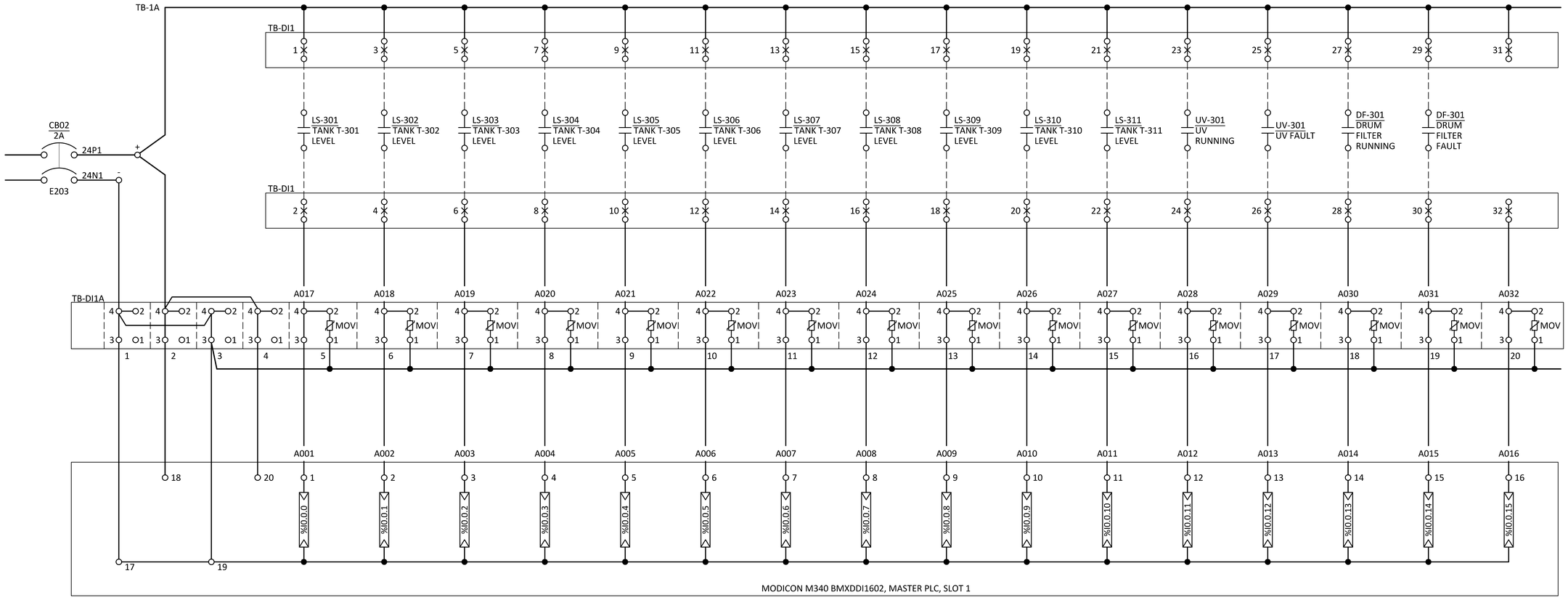

REVIEWED FOR CODE COMPLIANCE
Thomas W Peterson
12/14/2023
DIVISION OF FACILITIES CONSTRUCTION AND MANAGEMENT

DFCM CODE COMPLIANCE OFFICER

NO.	REVISIONS	BY	DATE
	PUBLISHED		
C	100% DESIGN REVIEW	JT	10/23
B	90% DESIGN REVIEW	JT	9/23
A	50% DESIGN REVIEW	JT	5/23

This document or any part thereof in detail or design concept is the property of Forsgren Associates Inc. and shall not be copied without the written authorization of Forsgren Associates Inc.

DRAWN DJ
DESIGNED MEC
APPROVED
QA MLL

ATTENTION
LINE IS 2-INCHES
AT 24"x36" SIZE
IF NOT 2-INCHES, SCALE DRAWING ACCORDINGLY

PROFESSIONAL ENGINEER
No. 9428479-2202
MATHEW LEWIS LAWSON
STATE OF UTAH
10/04/2023

FISHERIES EXPERIMENT STATION
UTAH DIVISION OF WILDLIFE RESOURCES
1465 WEST 200 NORTH
LOGAN, UTAH 84321

UTAH DNR WILDLIFE RESOURCES

McMillen

Blue Stakes of UTAH 811 Bluestakes.org

WARN WATER AQUACULTURE BUILDING
LOGAN HATCHERY IMPROVEMENT PROJECT

MASTER PLC I/O SCHEMATIC
DISCRETE INPUT 1

PROJECT NO: 14-23-0005
SHEET NO: E304
DATE: 10-2023
PAGE NO: 134

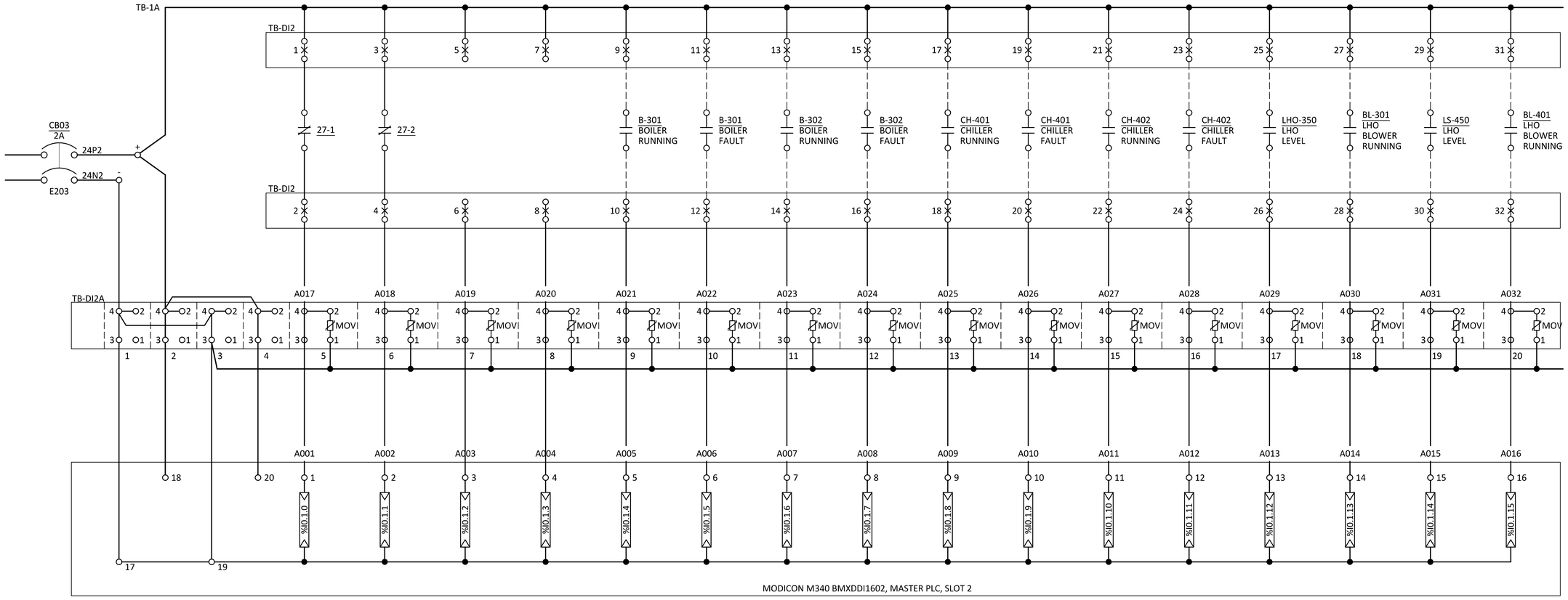

REVIEWED FOR CODE COMPLIANCE
Thomas W Peterson
12/14/2023
DIVISION OF FACILITIES CONSTRUCTION AND MANAGEMENT

DFCM CODE COMPLIANCE OFFICER

NO.	REVISIONS	BY	DATE
	PUBLISHED		
C	100% DESIGN REVIEW	JT	10/23
B	90% DESIGN REVIEW	JT	9/23
A	50% DESIGN REVIEW	JT	5/23

This document or any part thereof in detail or design concept is the property of Forsgren Associates Inc. and shall not be copied without the written authorization of Forsgren Associates Inc.

DRAWN DJ
DESIGNED MEC
APPROVED
QA MLL

ATTENTION
LINE IS 2-INCHES
AT 24"x36" SIZE
IF NOT 2-INCHES, SCALE DRAWING ACCORDINGLY

PROFESSIONAL ENGINEER
No. 9428479-2202
MATHEW LEWIS LAWSON
STATE OF UTAH
10/04/2023

FISHERIES EXPERIMENT STATION
UTAH DIVISION OF WILDLIFE RESOURCES
1465 WEST 200 NORTH
LOGAN, UTAH 84321

UTAH DNR WILDLIFE RESOURCES

McMillen

Blue Stakes of UTAH 811 Bluestakes.org

WARN WATER AQUACULTURE BUILDING
LOGAN HATCHERY IMPROVEMENT PROJECT

MASTER PLC I/O SCHEMATIC
DISCRETE INPUT 2

PROJECT NO: 14-23-0005
SHEET NO: E305
DATE: 10-2023
PAGE NO: 135

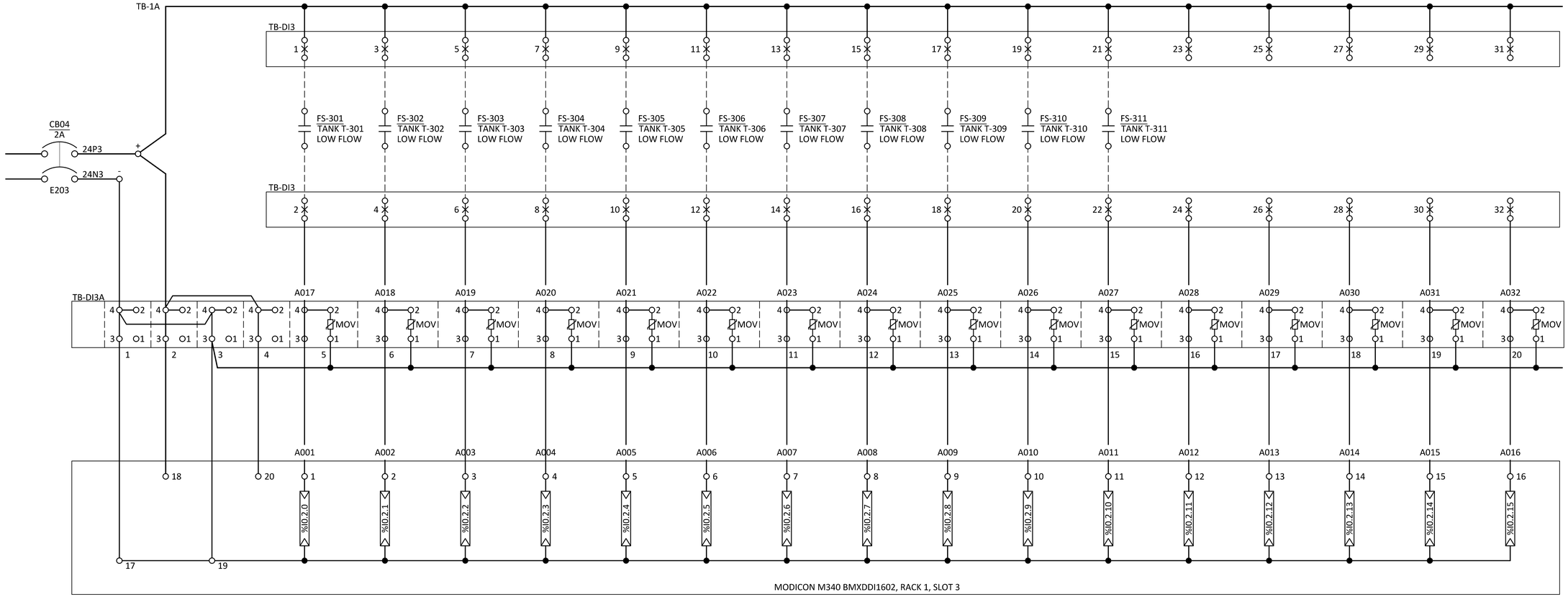

REVIEWED FOR CODE COMPLIANCE
Thomas W Peterson
12/14/2023
DIVISION OF FACILITIES CONSTRUCTION AND MANAGEMENT

DFCM CODE COMPLIANCE OFFICER

NO.	REVISIONS	BY	DATE
	PUBLISHED		
C	100% DESIGN REVIEW	JT	10/23
B	90% DESIGN REVIEW	JT	9/23
A	50% DESIGN REVIEW	JT	5/23

This document or any part thereof in detail or design concept is the property of Forsgren Associates Inc. and shall not be copied without the written authorization of Forsgren Associates Inc.

DRAWN DJ
DESIGNED MEC
APPROVED
QA MLL

ATTENTION
LINE IS 2-INCHES
AT 24"x36" SIZE
IF NOT 2-INCHES, SCALE DRAWING ACCORDINGLY

PROFESSIONAL ENGINEER
No. 9428479-2202
MATHEW LEWIS LAWSON
STATE OF UTAH
10/04/2023

FISHERIES EXPERIMENT STATION
UTAH DIVISION OF WILDLIFE RESOURCES
1465 WEST 200 NORTH
LOGAN, UTAH 84321

UTAH DNR WILDLIFE RESOURCES

McMillen

Blue Stakes of UTAH 811 Bluestakes.org

WARN WATER AQUACULTURE BUILDING
LOGAN HATCHERY IMPROVEMENT PROJECT

MASTER PLC I/O SCHEMATIC
DISCRETE INPUT 3

PROJECT NO: 14-23-0005
SHEET NO: E306
DATE: 10-2023
PAGE NO: 136

LEGEND:

A — RELAY-TYPE A
RELECO A30-C30

Q0.0 — DISCRETE OUTPUT

MOV,25V,520K-25

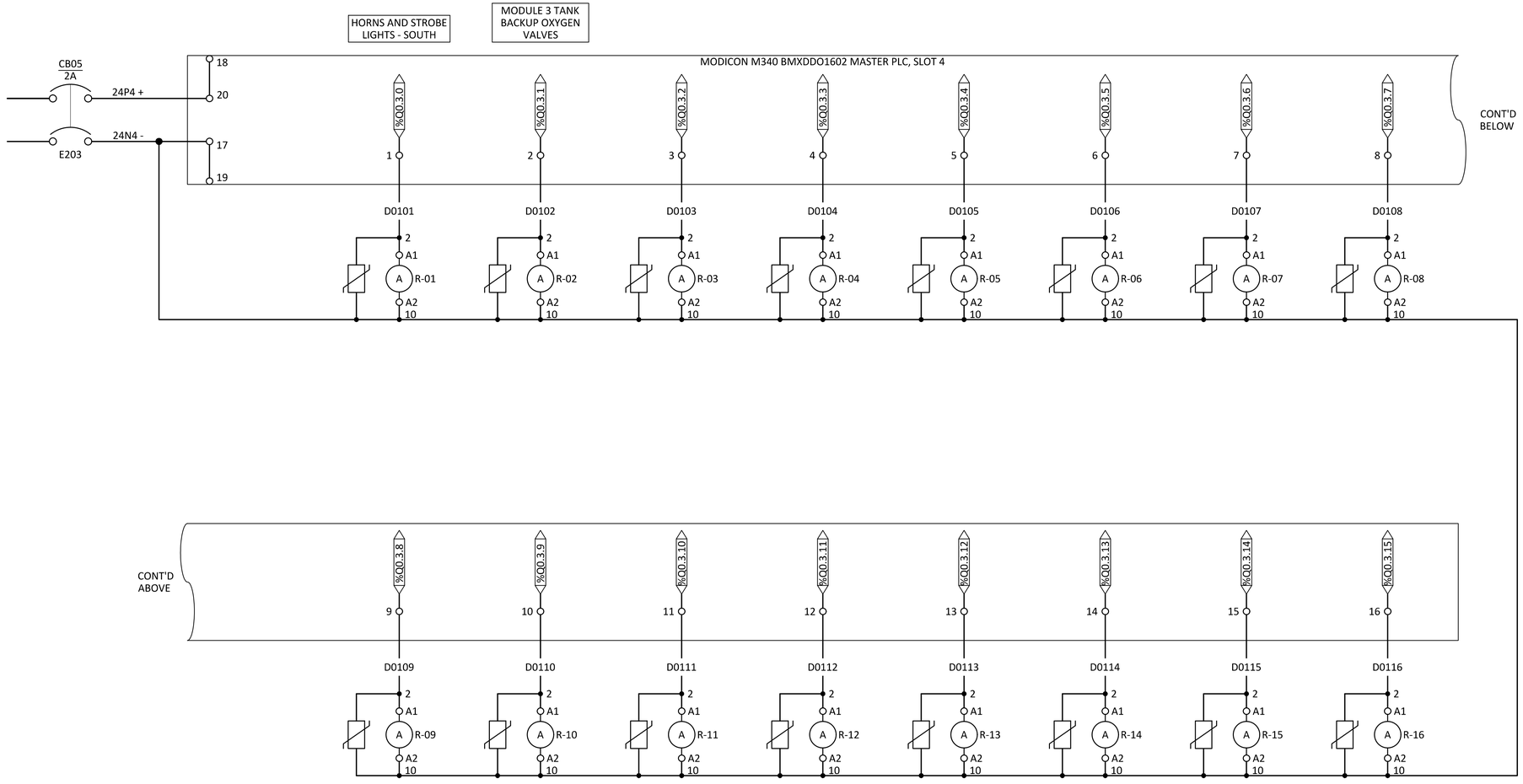

REVIEWED FOR CODE COMPLIANCE
Thomas W Peterson
12/14/2023
DIVISION OF FACILITIES CONSTRUCTION AND MANAGEMENT

DFCM CODE COMPLIANCE OFFICER

NO.	REVISIONS	BY	DATE
	PUBLISHED		
C	100% DESIGN REVIEW	JT	10/23
B	90% DESIGN REVIEW	JT	9/23
A	50% DESIGN REVIEW	JT	5/23

This document or any part thereof in detail or design concept is the property of Forsgren Associates Inc. and shall not be copied without the written authorization of Forsgren Associates Inc.

DRAWN DJ
DESIGNED MEC
APPROVED
QA MLL

ATTENTION
LINE IS 2-INCHES
AT 24"x36" SIZE
IF NOT 2-INCHES, SCALE DRAWING ACCORDINGLY

PROFESSIONAL ENGINEER
No. 9428479-2202
MATHEW LEWIS LAWSON
STATE OF UTAH
10/04/2023

FISHERIES EXPERIMENT STATION
UTAH DIVISION OF WILDLIFE RESOURCES
1465 WEST 200 NORTH
LOGAN, UTAH 84321

UTAH DNR WILDLIFE RESOURCES

McMillen

Blue Stakes of UTAH 811 Bluestakes.org

WARN WATER AQUACULTURE BUILDING
LOGAN HATCHERY IMPROVEMENT PROJECT

MASTER PLC I/O SCHEMATIC
DISCRETE OUTPUT

PROJECT NO: 14-23-0005
SHEET NO: E307
DATE: 10-2023
PAGE NO: 137

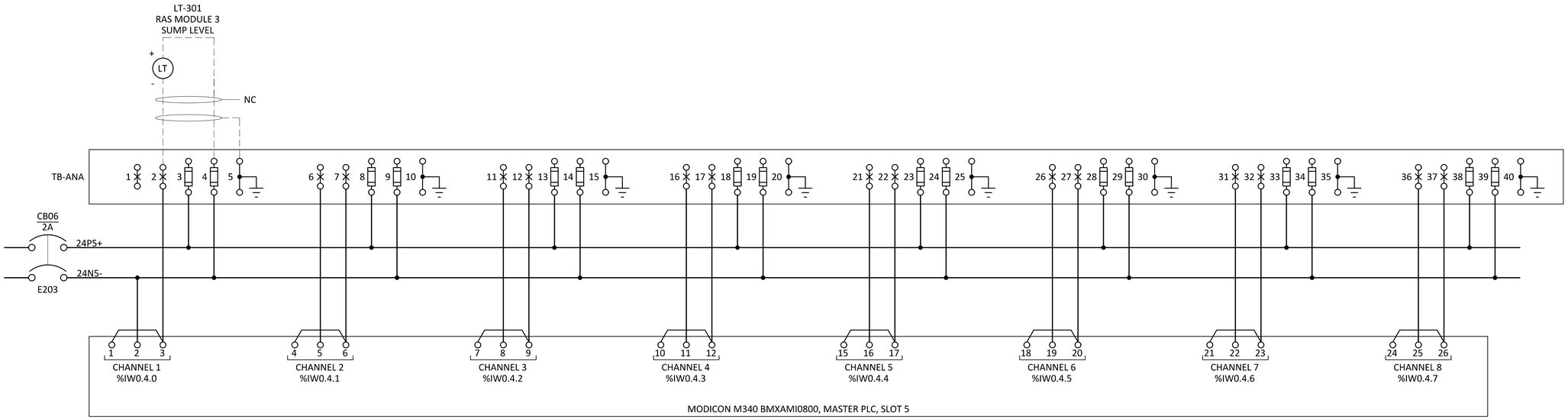

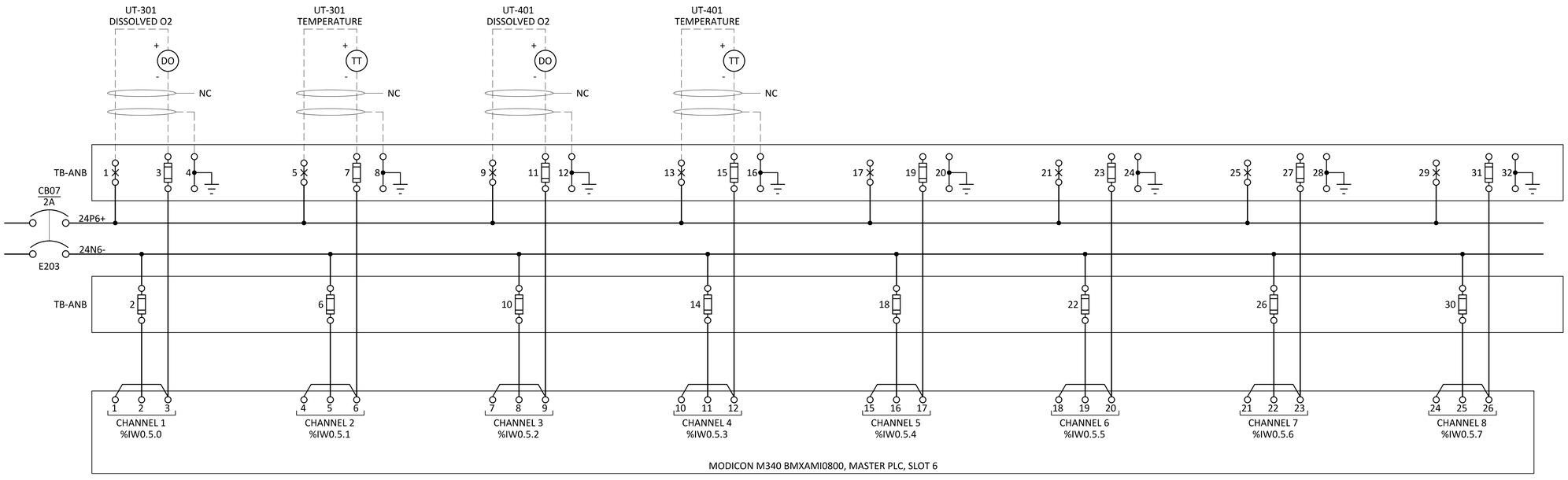

REVIEWED FOR CODE COMPLIANCE
Thomas W Peterson
12/14/2023
DIVISION OF FACILITIES CONSTRUCTION AND MANAGEMENT

DFCM CODE COMPLIANCE OFFICER

NO.	REVISIONS	BY	DATE
C	100% DESIGN REVIEW	JT	10/23
B	90% DESIGN REVIEW	JT	9/23
A	50% DESIGN REVIEW	JT	5/23

This document or any part thereof in detail or design concept is the property of Forsgren Associates Inc. and shall not be copied without the written authorization of Forsgren Associates Inc.

DRAWN DJ
DESIGNED MEC
APPROVED
QA MLL

ATTENTION
LINE IS 2-INCHES
AT 24"x36" SIZE
IF NOT 2-INCHES,
SCALE DRAWING ACCORDINGLY

PROFESSIONAL ENGINEER
No. 9428479-2202
MATHEW LEWIS LAWSON
STATE OF UTAH
10/04/2023

FISHERIES EXPERIMENT STATION
UTAH DIVISION OF WILDLIFE RESOURCES
1465 WEST 200 NORTH
LOGAN, UTAH 84321

UTAH DNR WILDLIFE RESOURCES

McMillen

Blue Stakes of UTAH 811 Bluestakes.org

WARN WATER AQUACULTURE BUILDING
LOGAN HATCHERY IMPROVEMENT PROJECT

MASTER PLC I/O
SCHEMATIC ANALOG INPUT 1 & 2

PROJECT NO: 14-23-0005
SHEET NO: E308
DATE: 10-2023
PAGE NO: 138

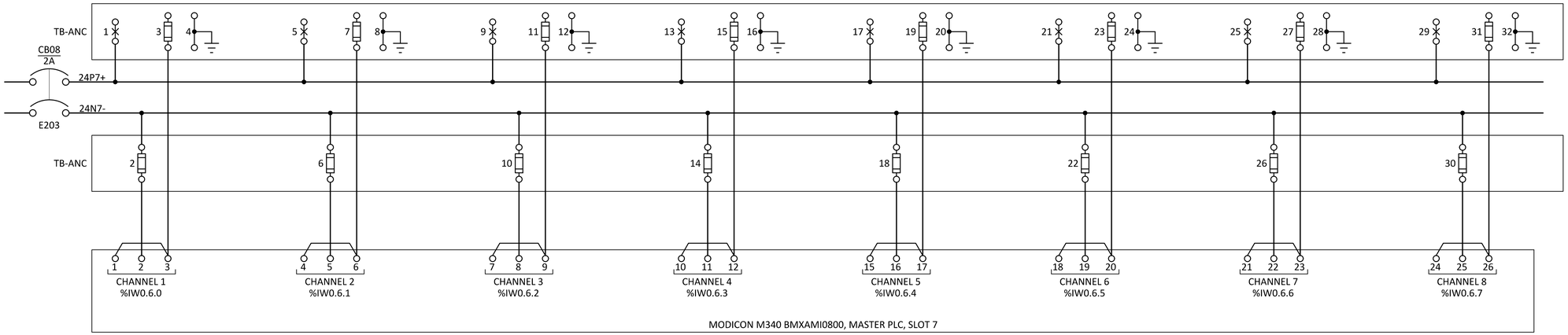

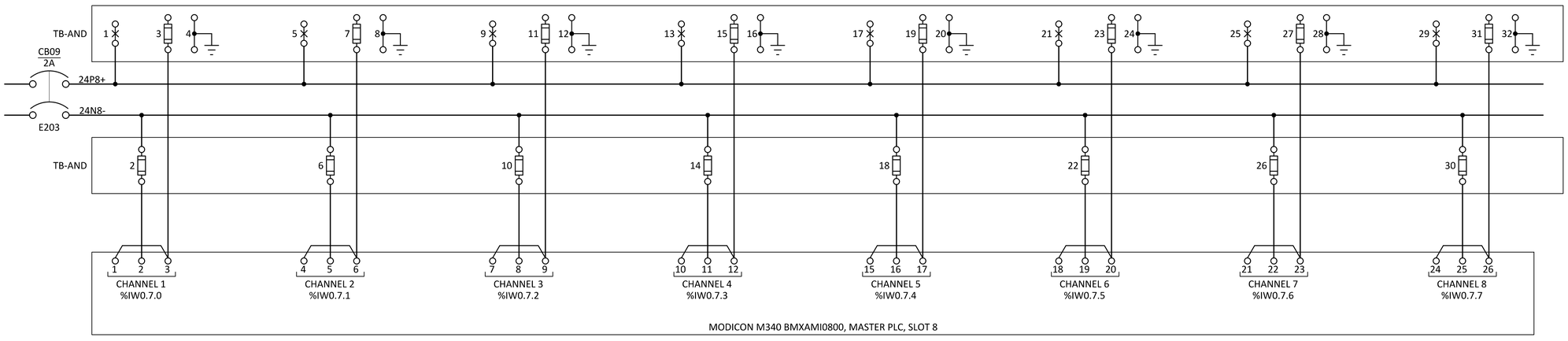

REVIEWED FOR CODE COMPLIANCE
Thomas W Peterson
12/14/2023
DIVISION OF FACILITIES CONSTRUCTION AND MANAGEMENT

DFCM CODE COMPLIANCE OFFICER

NO.	REVISIONS	BY	DATE
	PUBLISHED		
C	100% DESIGN REVIEW	JT	10/23
B	90% DESIGN REVIEW	JT	9/23
A	50% DESIGN REVIEW	JT	5/23

This document or any part thereof in detail or design concept is the property of Forsgren Associates Inc. and shall not be copied without the written authorization of Forsgren Associates Inc.

DRAWN DJ
DESIGNED MEC
APPROVED
QA MLL

ATTENTION
LINE IS 2-INCHES
AT 24"x36" SIZE
IF NOT 2-INCHES, SCALE DRAWING ACCORDINGLY

PROFESSIONAL ENGINEER
No. 9428479-2202
MATHEW LEWIS LAWSON
STATE OF UTAH
10/04/2023

FISHERIES EXPERIMENT STATION
UTAH DIVISION OF WILDLIFE RESOURCES
1465 WEST 200 NORTH
LOGAN, UTAH 84321

UTAH DNR WILDLIFE RESOURCES

McMillen

Blue Stakes of UTAH 811 Bluestakes.org

WARN WATER AQUACULTURE BUILDING
LOGAN HATCHERY IMPROVEMENT PROJECT

MASTER PLC I/O
SCHEMATIC ANALOG INPUT 3 & 4

PROJECT NO: 14-23-0005
SHEET NO: E309
DATE: 10-2023
PAGE NO: 139

SHEET NOTES:

1. ANALOG OUTPUT MODULE IS SELF POWERED AND DOES NOT REQUIRE EXTERNAL POWER.
2. FUSES ARE 0.315A, LITTLEFUSE 50803150.

LEGEND:

NC NO CONNECTION

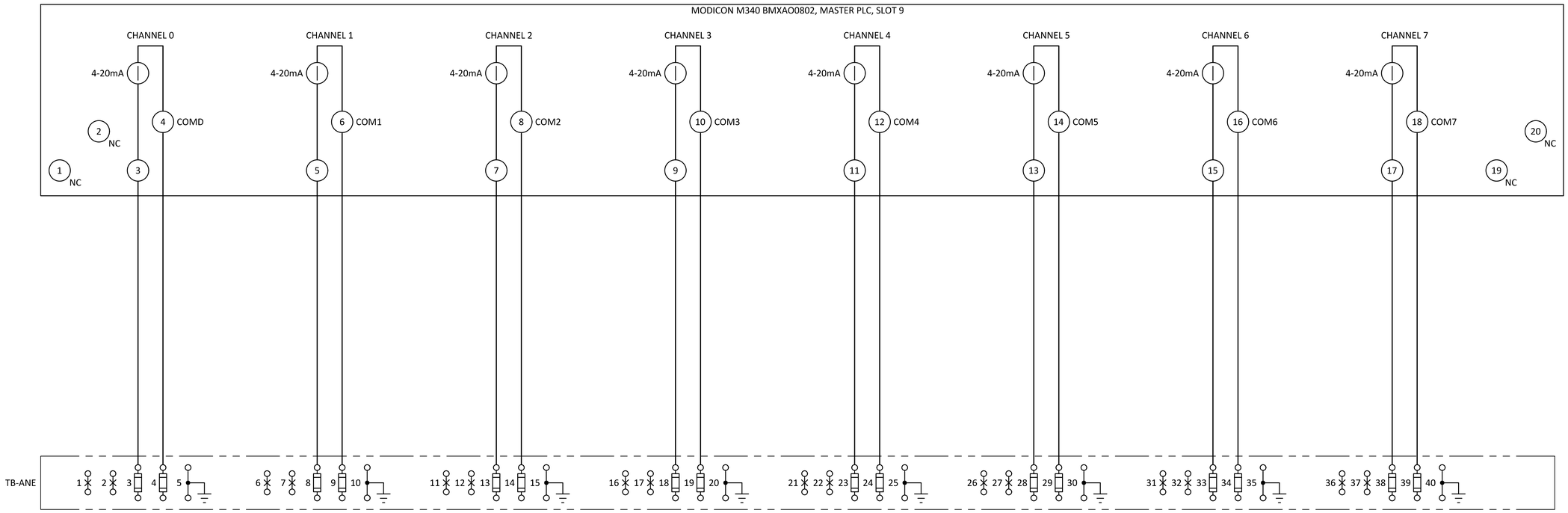

REVIEWED FOR CODE COMPLIANCE
Thomas W Peterson
12/14/2023
DIVISION OF FACILITIES CONSTRUCTION AND MANAGEMENT
DFCM CODE COMPLIANCE OFFICER

	PUBLISHED		
C	100% DESIGN REVIEW	JT	10/23
B	90% DESIGN REVIEW	JT	9/23
A	50% DESIGN REVIEW	JT	5/23
NO.	REVISIONS	BY	DATE

This document or any part thereof in detail or design concept is the property of Forsgren Associates Inc. and shall not be copied without the written authorization of Forsgren Associates Inc.

DRAWN DJ
DESIGNED MEC
APPROVED
QA MLL

ATTENTION
LINE IS 2-INCHES AT 24"x36" SIZE
IF NOT 2-INCHES, SCALE DRAWING ACCORDINGLY

PROFESSIONAL ENGINEER
No. 9428479-2202
MATHEW LEWIS LAWSON
STATE OF UTAH
10/04/2023

FISHERIES EXPERIMENT STATION
UTAH DIVISION OF WILDLIFE RESOURCES
1465 WEST 200 NORTH
LOGAN, UTAH 84321

UTAH DNR WILDLIFE RESOURCES

McMillen

Blue Stakes of UTAH 811 Bluestakes.org

WARN WATER AQUACULTURE BUILDING
LOGAN HATCHERY IMPROVEMENT PROJECT
MASTER PLC I/O
SCHEMATIC ANALOG OUTPUT

PROJECT NO: 14-23-0005
SHEET NO: E310
DATE: 10-2023
PAGE NO: 140

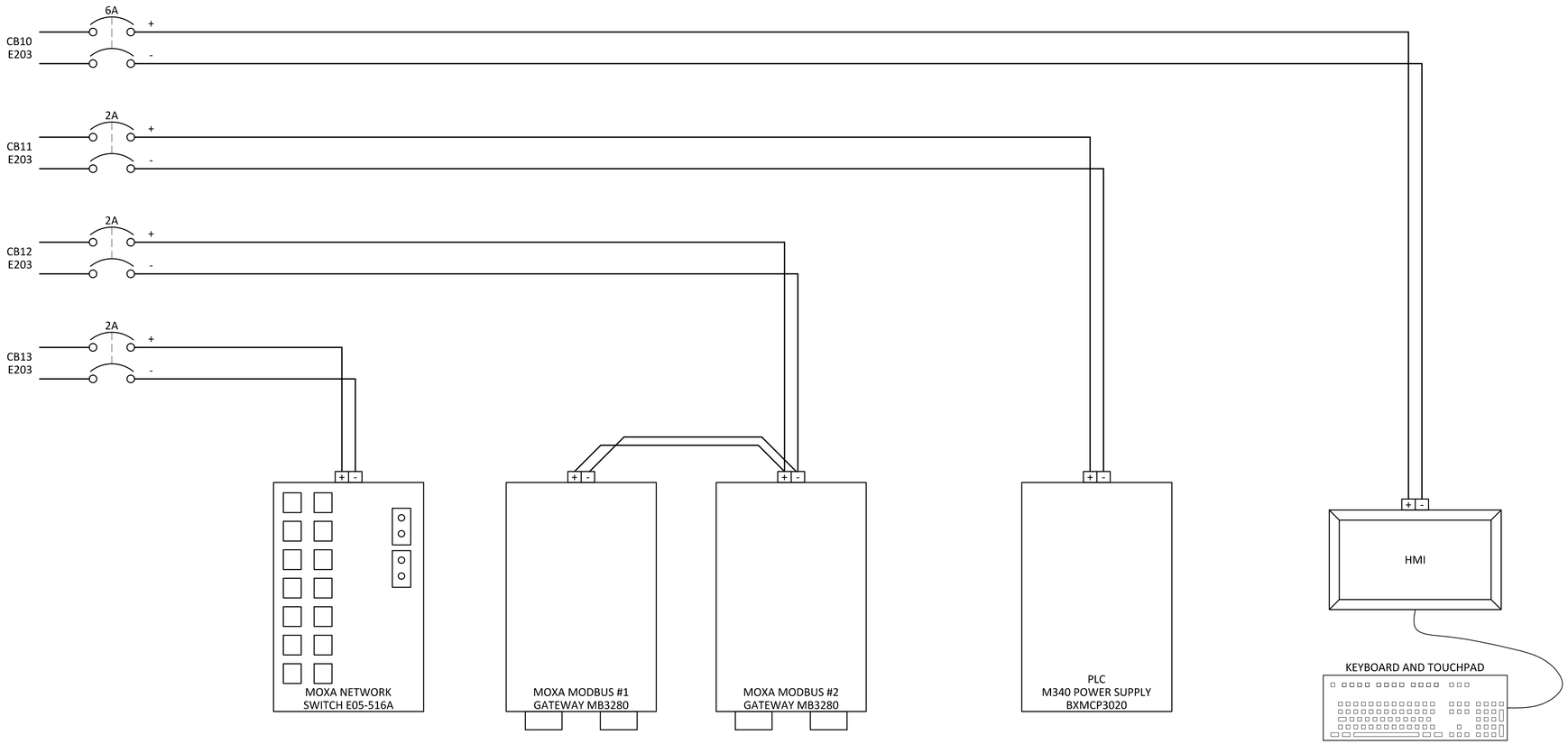

NO.	REVISIONS	BY	DATE
	PUBLISHED		
C	100% DESIGN REVIEW	JT	10/23
B	90% DESIGN REVIEW	JT	9/23
A	50% DESIGN REVIEW	JT	5/23

This document or any part thereof in detail or design concept is the property of Forsgren Associates Inc. and shall not be copied without the written authorization of Forsgren Associates Inc.

DRAWN DJ
DESIGNED MEC
APPROVED
QA MLL

ATTENTION
LINE IS 2-INCHES
AT 24"x36" SIZE
IF NOT 2-INCHES, SCALE DRAWING ACCORDINGLY

PROFESSIONAL ENGINEER
No. 9428479-2202
MATHEW LEWIS LAWSON
STATE OF UTAH
10/04/2023

FISHERIES EXPERIMENT STATION
UTAH DIVISION OF WILDLIFE RESOURCES
1465 WEST 200 NORTH
LOGAN, UTAH 84321

UTAH DNR WILDLIFE RESOURCES

McMillen

Blue Stakes of UTAH 811 Bluestakes.org

REVIEWED FOR CODE COMPLIANCE
Thomas W Peterson
12/1/2023
DIVISION OF FACILITIES CONSTRUCTION AND MANAGEMENT
DFCM CODE COMPLIANCE OFFICER

WARN WATER AQUACULTURE BUILDING
LOGAN HATCHERY IMPROVEMENT PROJECT
MASTER PLC I/O
MISCELLANEOUS 24VDC POWER

PROJECT NO: 14-23-0005
SHEET NO: E311
DATE: 10-2023
PAGE NO: 141

SHEET NOTES:

1. SEE DWG E321 FOR BILL OF MATERIALS AND NAMEPLATE LIST.
2. PLC SHALL BE 12-SLOT MODICON M340 CONTROLLER, SEE BILL OF MATERIALS FOR COMPLETE I/O ALLOTMENT.
3. INSTALL DOOR STOP, DOOR SWITCH AND ENCLOSURE LIGHT PER MANUFACTURER'S INSTRUCTIONS.

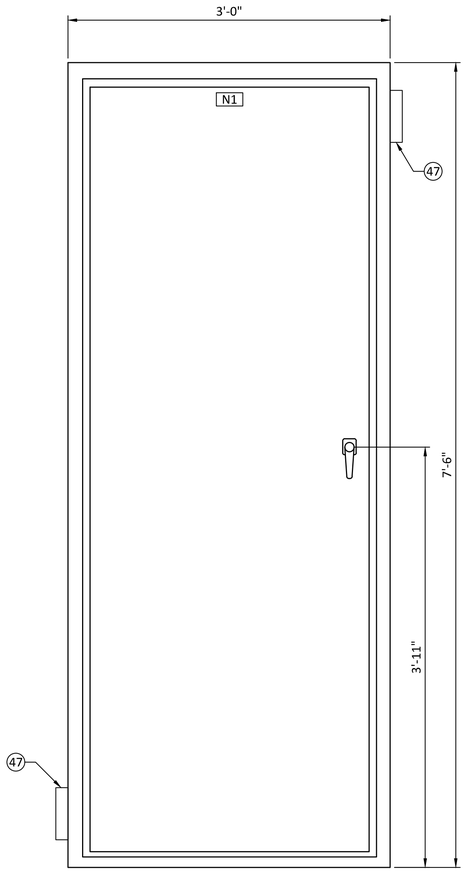

REMOTE I/O ENCLOSURE - DOOR LAYOUT

SCALE: 1 1/2"= 1'-0"

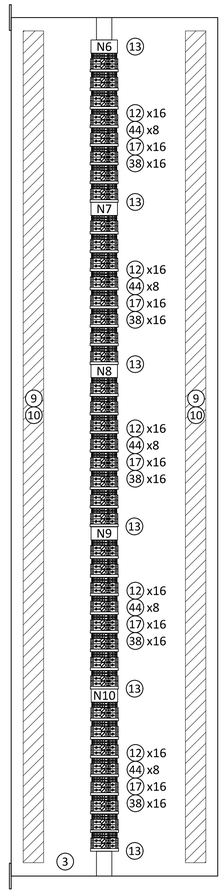

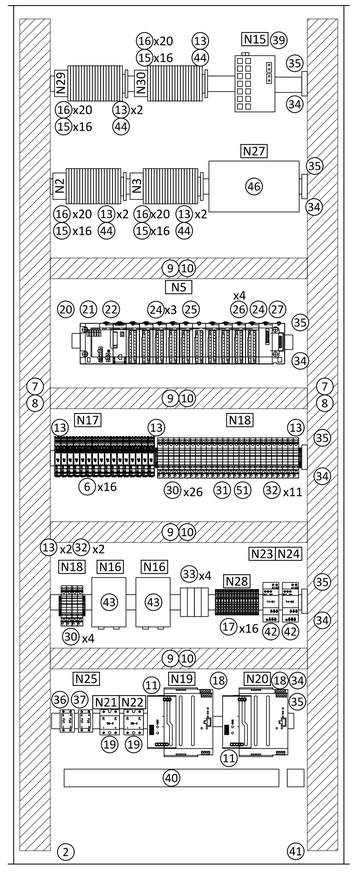

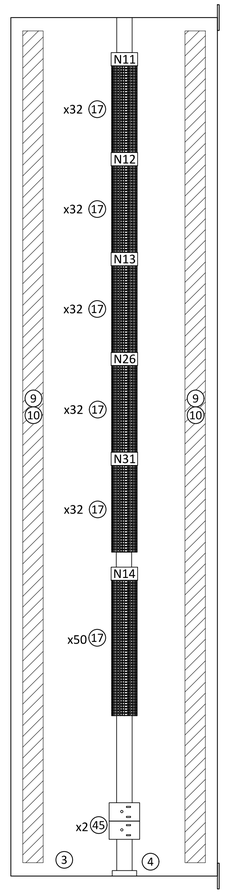

REMOTE I/O ENCLOSURE - INTERNAL LAYOUT

SCALE: 1 1/2"= 1'-0"

REMOTE I/O RACK MODULE ARRANGEMENT

	POWER SUPPLY	REMOTE ADAPTER	DI	DI	DI	DO	AI	AI	AI	AI	DI	AO	SPARE
SLOT		0	1	2	3	4	5	6	7	8	9	10	11

REVIEWED FOR CODE COMPLIANCE
Thomas W Peterson
12/14/2023
DIVISION OF FACILITIES CONSTRUCTION AND MANAGEMENT

DFCM CODE COMPLIANCE OFFICER

NO.	REVISIONS	BY	DATE
	PUBLISHED		
C	100% DESIGN REVIEW	JT	10/23
B	90% DESIGN REVIEW	JT	9/23
A	50% DESIGN REVIEW	JT	5/23

This document or any part thereof in detail or design concept is the property of Forsgren Associates Inc. and shall not be copied without the written authorization of Forsgren Associates Inc.

DRAWN DJ
DESIGNED MEC
APPROVED
QA MLL

ATTENTION
LINE IS 2-INCHES
AT 24"x36" SIZE
IF NOT 2-INCHES, SCALE DRAWING ACCORDINGLY

PROFESSIONAL ENGINEER
No. 9428479-2202
MATHEW LEWIS LAWSON
STATE OF UTAH
10/04/2023

FISHERIES EXPERIMENT STATION
UTAH DIVISION OF WILDLIFE RESOURCES
1465 WEST 200 NORTH
LOGAN, UTAH 84321

UTAH DNR WILDLIFE RESOURCES

McMillen

Blue Stakes of UTAH 811 Bluestakes.org

WARN WATER AQUACULTURE BUILDING
LOGAN HATCHERY IMPROVEMENT PROJECT

REMOTE I/O
PANEL LAYOUT

PROJECT NO: 14-23-0005
SHEET NO: E320
DATE: 10-2023
PAGE NO: 142

REMOTE I/O BILL OF MATERIAL

ITEM	QTY	DESCRIPTION	MANUFACTURER	P/N
1	1	ENCLOSURE, SINGLE DOOR, 90"H X 36"W X 24"D, NEMA 4X SS	HAMMOND	HN4FS903624SS
2	1	BACK PANEL 90"H X 36"W	HAMMOND	90XFW
3	2	SIDE PANELS 90"H X 24"W	HAMMOND	90FD20
4	1	REMOTE DOOR SWITCH	HAMMOND	FLKDS
5	1	ENCLOSURE LIGHT	HAMMOND	FLK24T8
6	16	RELAY, TERMINAL BLOCK	ALLEN BRADLEY	700-HLT12Z24
7	A/R	WIRE DUCT, 3"W X 3"H	PANDUIT	F3X3LG6
8	A/R	WIRE DUCT COVER, 3"W	PANDUIT	C3LG6
9	A/R	WIRE DUCT, 2"W X 3"H	PANDUIT	F2X3LG6
10	A/R	WIRE DUCT COVER, 2"W	PANDUIT	C2LG6
11	2	POWER SUPPLY - QUINT4-PS/1AC/24DC/10A	PHOENIX	2904601
12	80	FUSE HOLDER, UK10-DREHSILA	PHOENIX	3005662
13	18	END CLAMP, E/NS	PHOENIX	0804376
14	A/R	TERMINAL MARKER, UBE/D	PHOENIX	800307
15	64	SURGE PROTECTION, TERMINTRAB, 24VDC MOV, ST-BC	PHOENIX	2788391
16	80	TERMINAL BLOCK, BASE FOR SURGE PROTECTION, TT-UKK5-T BE	PHOENIX	2788401
17	306	TERMINAL BLOCK, KNIFE SW, UT 4-MTL	PHOENIX	3046144
18	2	UPS, 24VDC	PHOENIX	2320267
19	2	BRIDGE, DIODE RECTIFIER, 80A	NTE	NTE 5346
20	1	PLC CHASSIS, 12 SLOT	SCHNEIDER ELECTRIC	BMXXBP1200
21	1	PLC POWER SUPPLY	SCHNEIDER ELECTRIC	BMXCPS3020
22	1	REMOTE I/O ADAPTER MODULE	SCHNEIDER ELECTRIC	BMXPRA0100
23	1	DOOR STOP	HAMMOND	DSTOPK
24	4	DIGITAL INPUT MODULE	SCHNEIDER ELECTRIC	BMXDDI1602
25	1	DIGITAL OUTPUT MODULE	SCHNEIDER ELECTRIC	BMXDDO1602
26	4	ANALOG INPUT MODULE	SCHNEIDER ELECTRIC	BMXAMI0800
27	1	ANALOG OUTPUT MODULE	SCHNEIDER ELECTRIC	BMXAMO0802

REMOTE I/O BILL OF MATERIAL

ITEM	QTY	DESCRIPTION	MANUFACTURER	P/N
28	4	DISCRETE I/O CABLE ASSEMBLY	SCHNEIDER ELECTRIC	BMXFTW301
29	6	ANALOG I/O CABLE ASSEMBLY	SCHNEIDER ELECTRIC	BMXFTW301S
30	28	BASE, CIRCUIT BREAKER, ELEMENT, CB 1/10-1/10 UT-BE	PHOENIX	2801305
31	1	CIRCUIT BREAKER, 16 A	PHOENIX	2800889
32	13	CIRCUIT BREAKER, 2 A	PHOENIX	2800870
33	4	DB9 FEMALE BREAKOUT CONNECTOR	PHOENIX	2315162
34	A/R	DIN RAIL, TS35	WEIMULLER	514570000
35	6	TB, GROUNDING, USLK535, DIN RAIL	PHOENIX	444019
36	2	FUSE HOLDER, 600 VAC, CLASS CC, 1-POLE	LITTELFUSE	LFPSM001
37	8	FUSE, CLASS CC 10A (INCLUDE SPARES)	LITTELFUSE	KLKR010
38	90	FUSE, 0.315A (INCLUDING SPARES)	LITTELFUSE	508.315
39	1	SWITCH, NETWORK, 16 PORT, 2-MM FIBER	MOXA	EDS-516A-MM-SC
40	1	GROUND BUS, 2" COPPER		
41	1	PANEL GROUNDING		
42	2	RELAY, VOLTAGE	BENDER	VME420
43	2	GATEWAY, MODBUS, SERIAL TO TCP	MOXA	MB3280
44	44	GROUND TERMINAL BLOCK TYPE VT 2.5-PE	PHOENIX	3044092
45	2	120 VAC DIN RAIL OUTLET	PHOENIX	804165
46	1	AUTO DIALER, 8-CHANNEL	SIGMA CONTROLS	VM500-6-LV
47	1	VENTILATION KIT, TYPE 4X, PACK OF 2, 4.2" X 3"	HAMMOND	SDVN4XN2

SHEET NOTES:

1. CONTRACTOR TO VERIFY MATERIAL QUANTITIES WHEN QUOTING. CONTRACTOR TO PROVIDE ALL NECESSARY MATERIAL TO PROVIDE THE FUNCTIONALITY DEPICTED IN THE DRAWINGS AND CALLED OUT IN THE SPECIFICATIONS.

NAMEPLATES				
N	QTY	ENGRAVING	DIMENSIONS	CHAR SIZE
1	1	REMOTE I/O	8" X 3/4"	1/2"
2	1	TB-DI1A	2" X 3/4	1/4"
3	1	TB-DI2A	2" X 3/4	1/4"
4	1	NOT USED		
5	1	REMOTE I/O RACK	3" X 3/4	1/4"
6	1	TB-ANA	2" X 3/4	1/4"
7	1	TB-ANB	2" X 3/4	1/4"
8	1	TB-ANC	2" X 3/4	1/4"
9	1	TB-AND	2" X 3/4	1/4"
10	1	TB-ANE	2" X 3/4	1/4"
11	1	TB-DI1	2" X 3/4	1/4"
12	1	TB-DI2	2" X 3/4	1/4"
13	1	TB-DI3	2" X 3/4	1/4"
14	1	TB-R1	2" X 3/4	1/4"
15	1	NET SWS	2" X 3/4	1/4"
16	1	MB GATEWAY	3" X 3/4	1/4"
17	2	OUTPUT RELAYS	4" X 3/4	1/4"
18	2	CIRCUIT BKRS	3" X 3/4	1/4"
19	1	PS-1	1-1/4" X 3/4"	1/4"
20	1	PS-2	1-1/4" X 3/4"	1/4"
21	1	DIODE-1	2" X 3/4"	1/4"
22	1	DIODE-2	2" X 3/4"	1/4"
23	1	27-1	1" X 3/4"	1/4"
24	1	27-2	1" X 3/4"	1/4"
25	1	AC FUSE	2" X 3/4"	1/4"
26	1	TB-DI4	2" X 3/4"	1/4"
27	1	AUTO DIAL	2" X 3/4"	1/4"
28	1	TB-MB	2" X 3/4"	1/4"
29	1	TB-DI3A	2" X 3/4"	1/4"
30	1	TB-DI4A	2" X 3/4"	1/4"
31	1	TB-DI5	2" X 3/4"	1/4"

REVIEWED FOR CODE COMPLIANCE
Thomas W Peterson
12/14/2023
DIVISION OF FACILITIES CONSTRUCTION AND MANAGEMENT
DFCM CODE COMPLIANCE OFFICER

NO.	REVISIONS	BY	DATE
C	100% DESIGN REVIEW	JT	10/23
B	90% DESIGN REVIEW	JT	9/23
A	50% DESIGN REVIEW	JT	5/23

PUBLISHED

This document or any part thereof in detail or design concept is the property of Forsgren Associates Inc. and shall not be copied without the written authorization of Forsgren Associates Inc.

DRAWN DJ
DESIGNED MEC
APPROVED
QA MLL

ATTENTION
LINE IS 2-INCHES
AT 24"x36" SIZE
IF NOT 2-INCHES, SCALE DRAWING ACCORDINGLY

PROFESSIONAL ENGINEER
No. 9428479-2202
MATHEW LEWIS LAWSON
STATE OF UTAH
10/04/2023

FISHERIES EXPERIMENT STATION
UTAH DIVISION OF WILDLIFE RESOURCES
1465 WEST 200 NORTH
LOGAN, UTAH 84321

UTAH DNR WILDLIFE RESOURCES

McMillen

Blue Stakes of UTAH 811 Bluestakes.org

WARN WATER AQUACULTURE BUILDING
LOGAN HATCHERY IMPROVEMENT PROJECT
REMOTE I/O
BILL OF MATERIALS

PROJECT NO: 14-23-0005
SHEET NO: E321
DATE: 10-2023
PAGE NO: 143

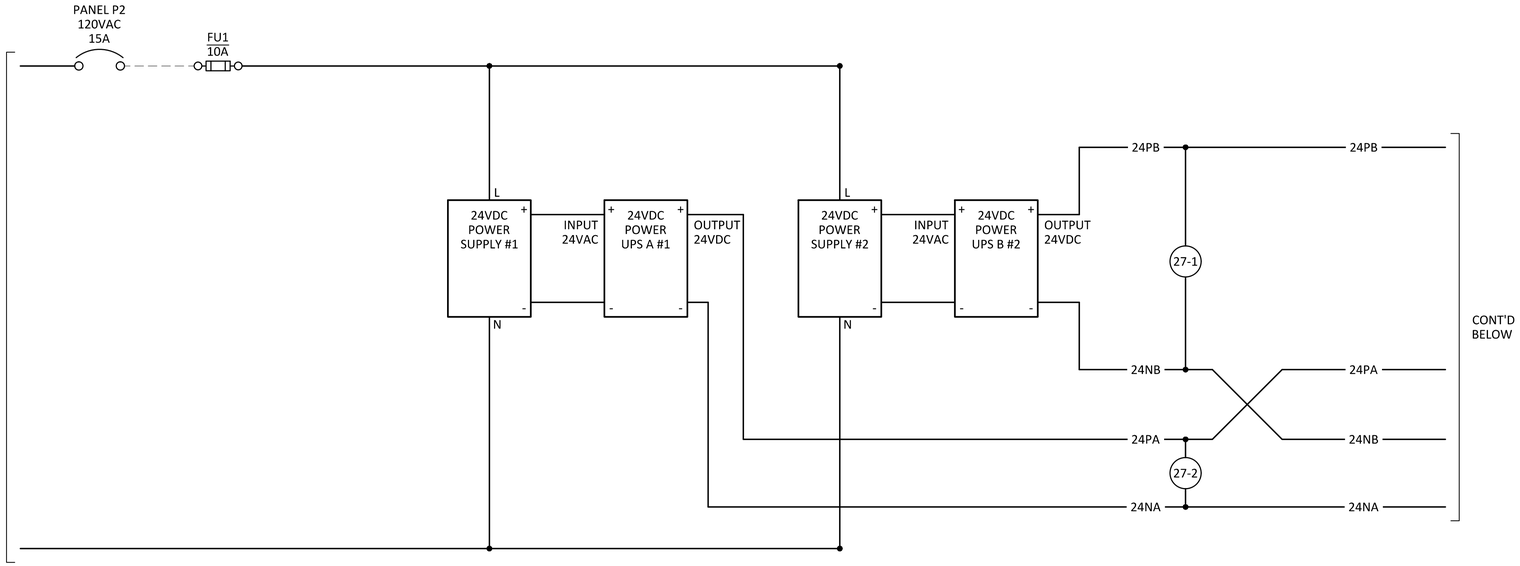

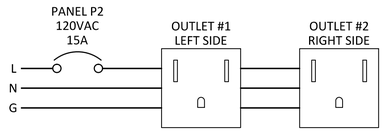

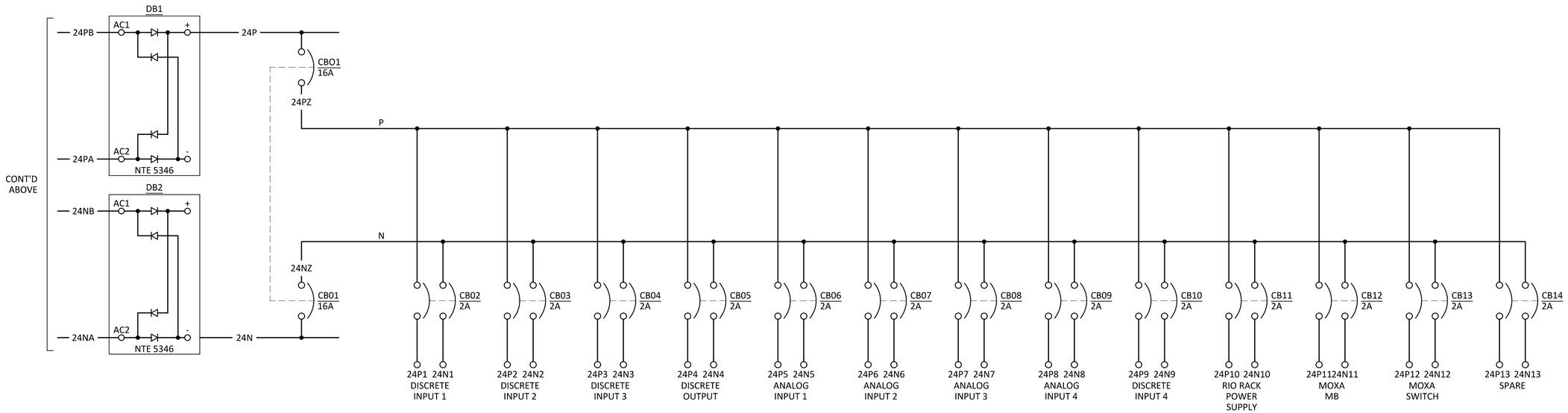

REVIEWED FOR CODE COMPLIANCE
Thomas W Peterson
12/14/2023
DIVISION OF FACILITIES CONSTRUCTION AND MANAGEMENT

DFCM CODE COMPLIANCE OFFICER

NO.	REVISIONS	BY	DATE
	PUBLISHED		
C	100% DESIGN REVIEW	JT	10/23
B	90% DESIGN REVIEW	JT	9/23
A	50% DESIGN REVIEW	JT	5/23

This document or any part thereof in detail or design concept is the property of Forsgren Associates Inc. and shall not be copied without the written authorization of Forsgren Associates Inc.

DRAWN DJ
DESIGNED MEC
APPROVED
QA MLL

ATTENTION
LINE IS 2-INCHES
AT 24"x36" SIZE
IF NOT 2-INCHES, SCALE DRAWING ACCORDINGLY

PROFESSIONAL ENGINEER
No. 9428479-2202
MATHEW LEWIS LAWSON
STATE OF UTAH
10/04/2023

FISHERIES EXPERIMENT STATION
UTAH DIVISION OF WILDLIFE RESOURCES
1465 WEST 200 NORTH
LOGAN, UTAH 84321

UTAH DNR WILDLIFE RESOURCES

McMillen

Blue Stakes of UTAH 811 Bluestakes.org

WARN WATER AQUACULTURE BUILDING
LOGAN HATCHERY IMPROVEMENT PROJECT

REMOTE I/O PANEL
24VDC POWER DISTRIBUTION

PROJECT NO: 14-23-0005
SHEET NO: E322
DATE: 10-2023
PAGE NO: 144

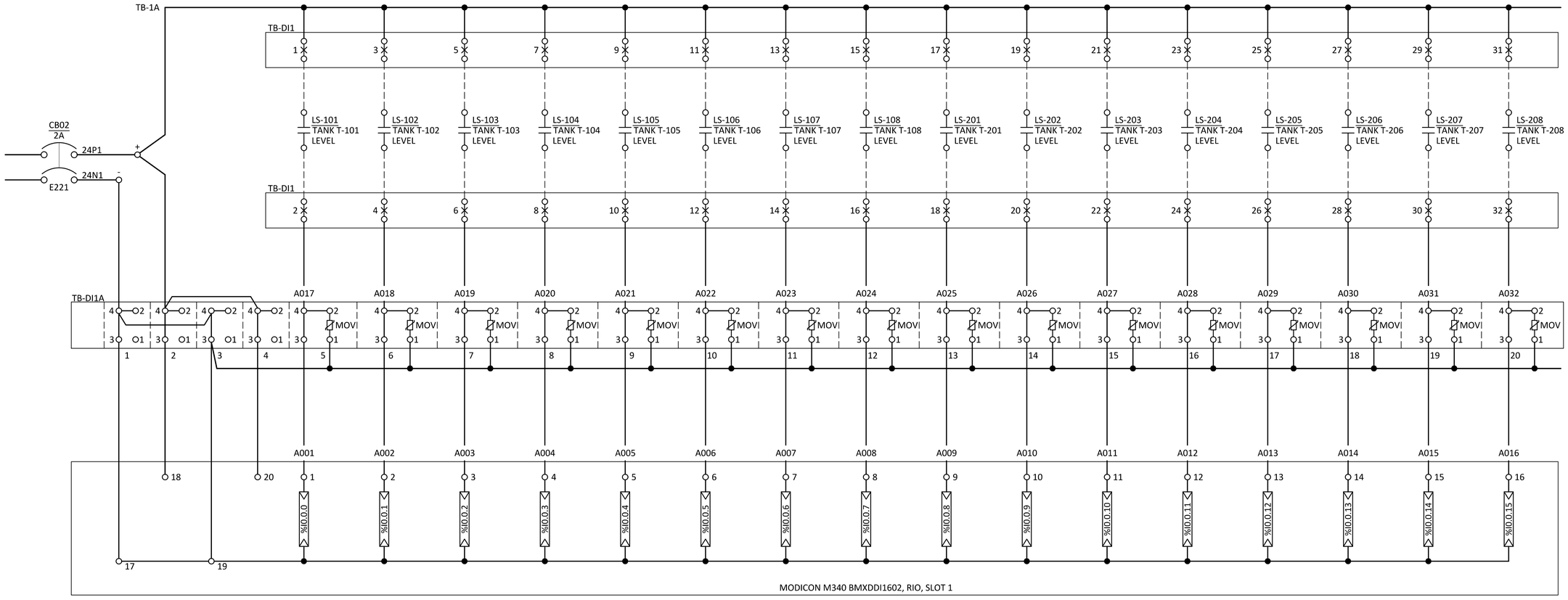

REVIEWED FOR CODE COMPLIANCE
Thomas W Peterson
12/1/4/2023
DIVISION OF FACILITIES CONSTRUCTION AND MANAGEMENT

DFCM CODE COMPLIANCE OFFICER

NO.	REVISIONS	BY	DATE
	PUBLISHED		
C	100% DESIGN REVIEW	JT	10/23
B	90% DESIGN REVIEW	JT	9/23
A	50% DESIGN REVIEW	JT	5/23

This document or any part thereof in detail or design concept is the property of Forsgren Associates Inc. and shall not be copied without the written authorization of Forsgren Associates Inc.

DRAWN DJ
DESIGNED MEC
APPROVED
QA MLL

ATTENTION
LINE IS 2-INCHES
AT 24"x36" SIZE
IF NOT 2-INCHES, SCALE DRAWING ACCORDINGLY

PROFESSIONAL ENGINEER
No. 9428479-2202
MATHEW LEWIS LAWSON
STATE OF UTAH
10/04/2023

FISHERIES EXPERIMENT STATION
UTAH DIVISION OF WILDLIFE RESOURCES
1465 WEST 200 NORTH
LOGAN, UTAH 84321

UTAH DNR WILDLIFE RESOURCES

McMillen

Blue Stakes of UTAH 811 Bluestakes.org

WARN WATER AQUACULTURE BUILDING
LOGAN HATCHERY IMPROVEMENT PROJECT

REMOTE I/O SCHEMATIC
DISCRETE INPUT 1

PROJECT NO: 14-23-0005
SHEET NO: E323
DATE: 10-2023
PAGE NO: 145

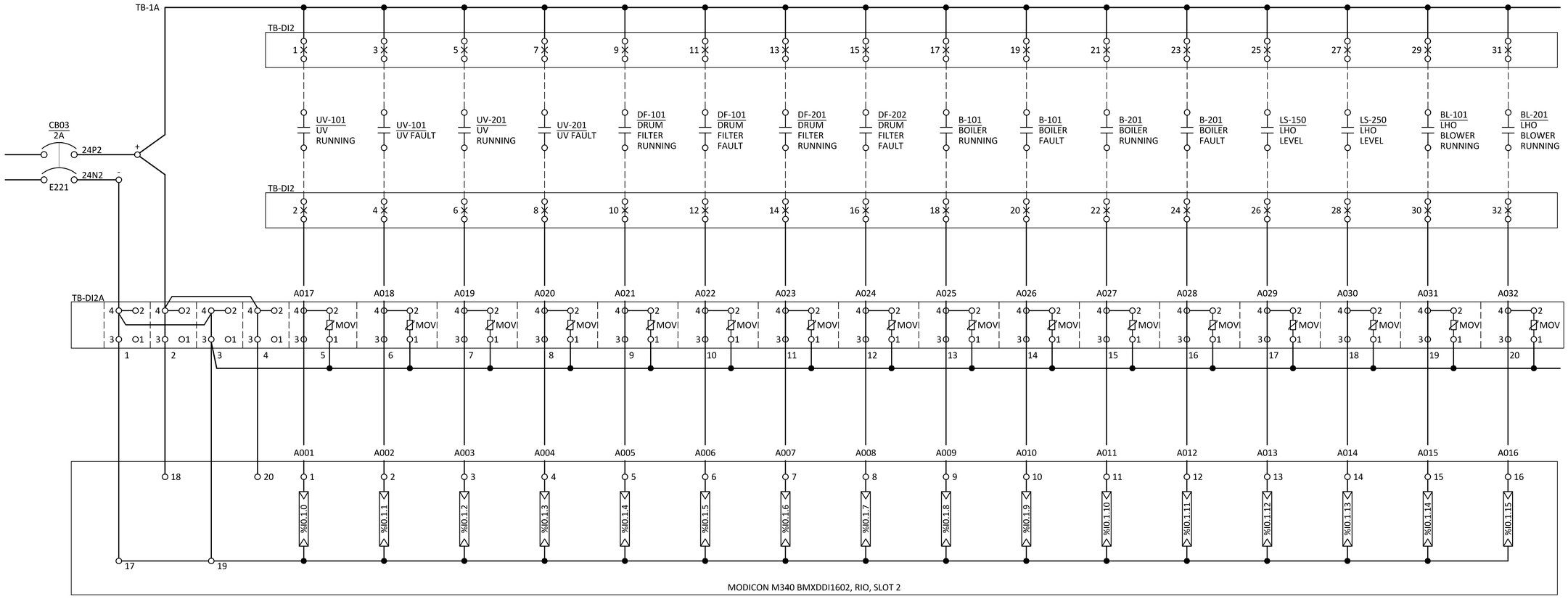

REVIEWED FOR CODE COMPLIANCE
Thomas W Peterson
12/1/4/2023
DIVISION OF FACILITIES CONSTRUCTION AND MANAGEMENT

DFCM CODE COMPLIANCE OFFICER

NO.	REVISIONS	BY	DATE
	PUBLISHED		
C	100% DESIGN REVIEW	JT	10/23
B	90% DESIGN REVIEW	JT	9/23
A	50% DESIGN REVIEW	JT	5/23

This document or any part thereof in detail or design concept is the property of Forsgren Associates Inc. and shall not be copied without the written authorization of Forsgren Associates Inc.

DRAWN DJ
DESIGNED MEC
APPROVED
QA MLL

ATTENTION
LINE IS 2-INCHES
AT 24"x36" SIZE
IF NOT 2-INCHES, SCALE DRAWING ACCORDINGLY

PROFESSIONAL ENGINEER
No. 9428479-2202
MATHEW LEWIS LAWSON
STATE OF UTAH
10/04/2023

FISHERIES EXPERIMENT STATION
UTAH DIVISION OF WILDLIFE RESOURCES
1465 WEST 200 NORTH
LOGAN, UTAH 84321

UTAH DNR WILDLIFE RESOURCES

McMillen

Blue Stakes of UTAH 811 Bluestakes.org

WARN WATER AQUACULTURE BUILDING
LOGAN HATCHERY IMPROVEMENT PROJECT

REMOTE I/O SCHEMATIC
DISCRETE INPUT 2

PROJECT NO: 14-23-0005
SHEET NO: E324
DATE: 10-2023
PAGE NO: 146

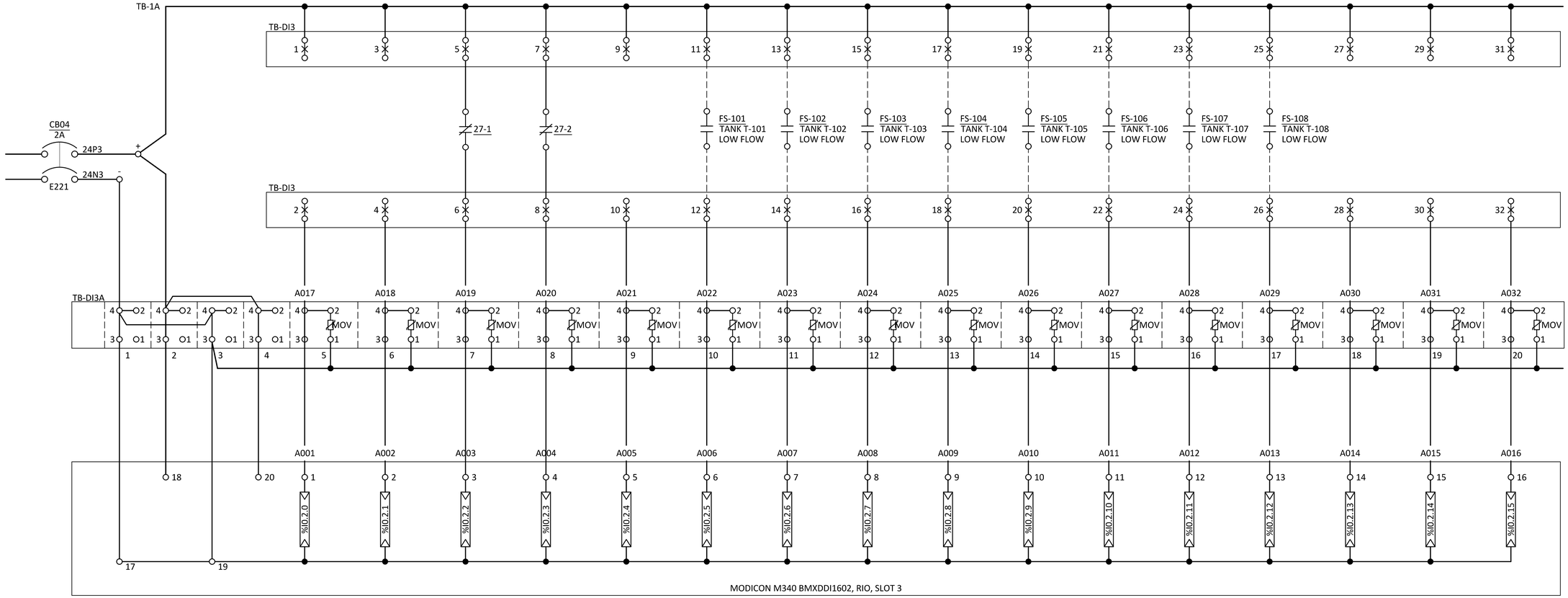

REVIEWED FOR CODE COMPLIANCE
Thomas W Peterson
12/14/2023
DIVISION OF FACILITIES CONSTRUCTION AND MANAGEMENT

DFCM CODE COMPLIANCE OFFICER

NO.	REVISIONS	BY	DATE
	PUBLISHED		
C	100% DESIGN REVIEW	JT	10/23
B	90% DESIGN REVIEW	JT	9/23
A	50% DESIGN REVIEW	JT	5/23

This document or any part thereof in detail or design concept is the property of Forsgren Associates Inc. and shall not be copied without the written authorization of Forsgren Associates Inc.

DRAWN DJ
DESIGNED MEC
APPROVED
QA MLL

ATTENTION
LINE IS 2-INCHES
AT 24"x36" SIZE
IF NOT 2-INCHES, SCALE DRAWING ACCORDINGLY

PROFESSIONAL ENGINEER
No. 9428479-2202
MATHEW LEWIS LAWSON
STATE OF UTAH
10/04/2023

FISHERIES EXPERIMENT STATION
UTAH DIVISION OF WILDLIFE RESOURCES
1465 WEST 200 NORTH
LOGAN, UTAH 84321

UTAH DNR WILDLIFE RESOURCES

McMillen

Blue Stakes of UTAH 811 Bluestakes.org

WARN WATER AQUACULTURE BUILDING
LOGAN HATCHERY IMPROVEMENT PROJECT
REMOTE I/O SCHEMATIC
DISCRETE INPUT 3

PROJECT NO: 14-23-0005
SHEET NO: E325
DATE: 10-2023
PAGE NO: 147

LEGEND:

A — RELAY-TYPE A
RELECO A30-C30

Q0.0 — DISCRETE OUTPUT

MOV,25V,520K-25

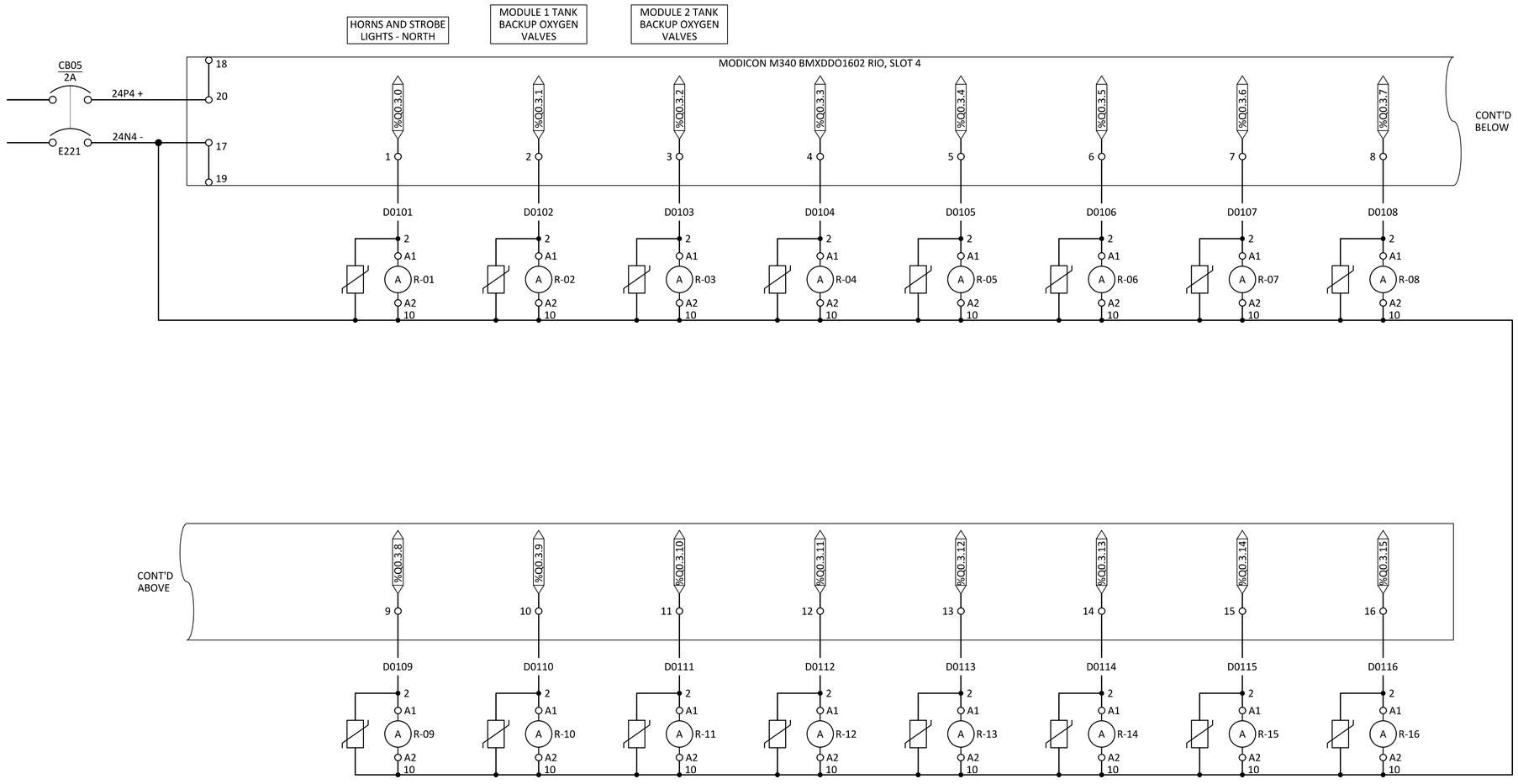

REVIEWED FOR CODE COMPLIANCE
Thomas W Peterson
12/1/2023
DIVISION OF FACILITIES CONSTRUCTION AND MANAGEMENT

DFCM CODE COMPLIANCE OFFICER

NO.	REVISIONS	BY	DATE
	PUBLISHED		
C	100% DESIGN REVIEW	JT	10/23
B	90% DESIGN REVIEW	JT	9/23
A	50% DESIGN REVIEW	JT	5/23

This document or any part thereof in detail or design concept is the property of Forsgren Associates Inc. and shall not be copied without the written authorization of Forsgren Associates Inc.

DRAWN DJ
DESIGNED MEC
APPROVED
QA MLL

ATTENTION
LINE IS 2-INCHES
AT 24"x36" SIZE
IF NOT 2-INCHES, SCALE DRAWING ACCORDINGLY

PROFESSIONAL ENGINEER
No. 9428479-2202
MATHEW LEWIS LAWSON
STATE OF UTAH
10/04/2023

FISHERIES EXPERIMENT STATION
UTAH DIVISION OF WILDLIFE RESOURCES
1465 WEST 200 NORTH
LOGAN, UTAH 84321

UTAH DNR WILDLIFE RESOURCES

McMillen

Blue Stakes of UTAH 811 Bluestakes.org

WARN WATER AQUACULTURE BUILDING
LOGAN HATCHERY IMPROVEMENT PROJECT

REMOTE I/O SCHEMATIC
DISCRETE OUTPUT

PROJECT NO: 14-23-0005
SHEET NO: E326
DATE: 10-2023
PAGE NO: 148

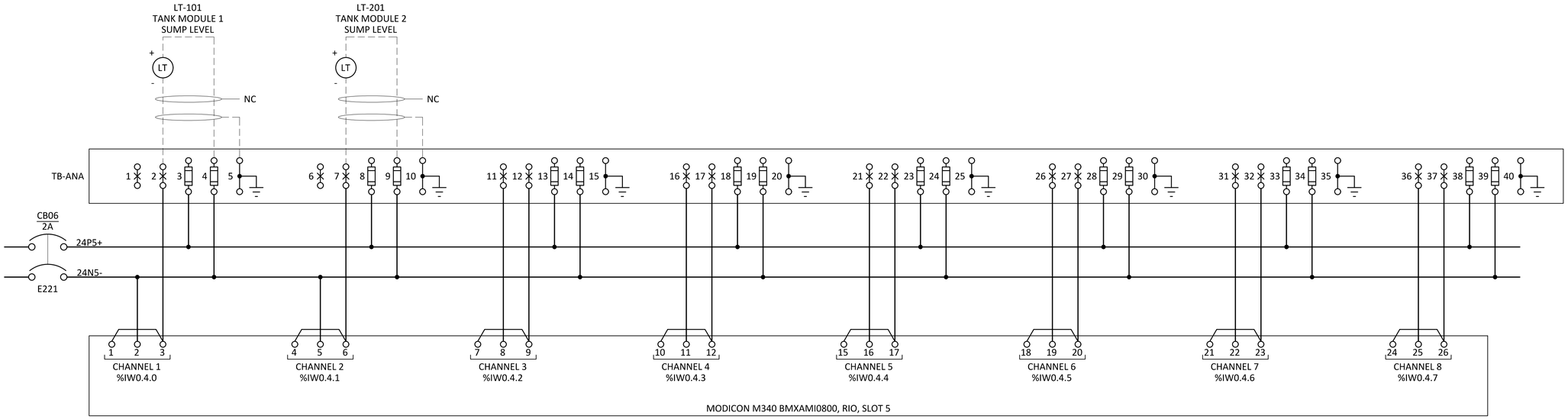

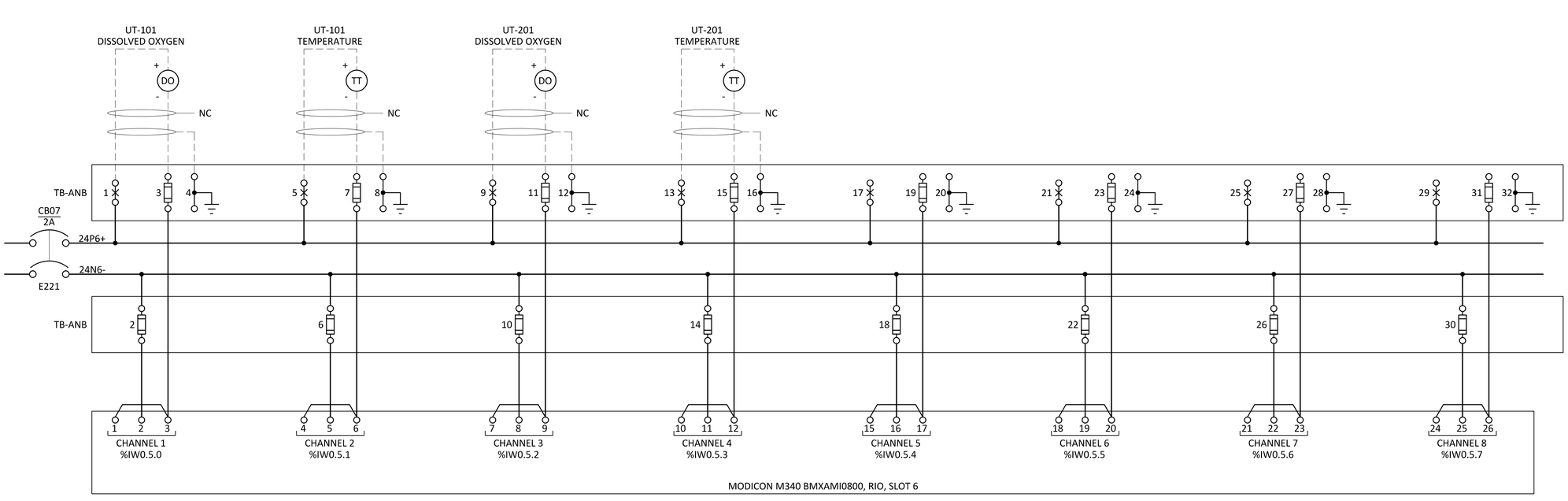

REVIEWED FOR CODE COMPLIANCE
Thomas W Peterson
12/14/2023
DIVISION OF FACILITIES CONSTRUCTION AND MANAGEMENT

DFCM CODE COMPLIANCE OFFICER

NO.	REVISIONS	BY	DATE
C	100% DESIGN REVIEW	JT	10/23
B	90% DESIGN REVIEW	JT	9/23
A	50% DESIGN REVIEW	JT	5/23

PUBLISHED

This document or any part thereof in detail or design concept is the property of Forsgren Associates Inc. and shall not be copied without the written authorization of Forsgren Associates Inc.

DRAWN DJ
DESIGNED MEC
APPROVED
QA MLL

ATTENTION
LINE IS 2-INCHES
AT 24"x36" SIZE
IF NOT 2-INCHES, SCALE DRAWING ACCORDINGLY

PROFESSIONAL ENGINEER
No. 9428479-2202
MATHEW LEWIS LAWSON
STATE OF UTAH
10/04/2023

FISHERIES EXPERIMENT STATION
UTAH DIVISION OF WILDLIFE RESOURCES
1465 WEST 200 NORTH
LOGAN, UTAH 84321

UTAH DNR WILDLIFE RESOURCES

McMillen

Blue Stakes of UTAH 811 Bluestakes.org

WARN WATER AQUACULTURE BUILDING
LOGAN HATCHERY IMPROVEMENT PROJECT

REMOTE I/O
SCHEMATIC ANALOG INPUT 1 & 2

PROJECT NO: 14-23-0005
SHEET NO: E327
DATE: 10-2023
PAGE NO: 149

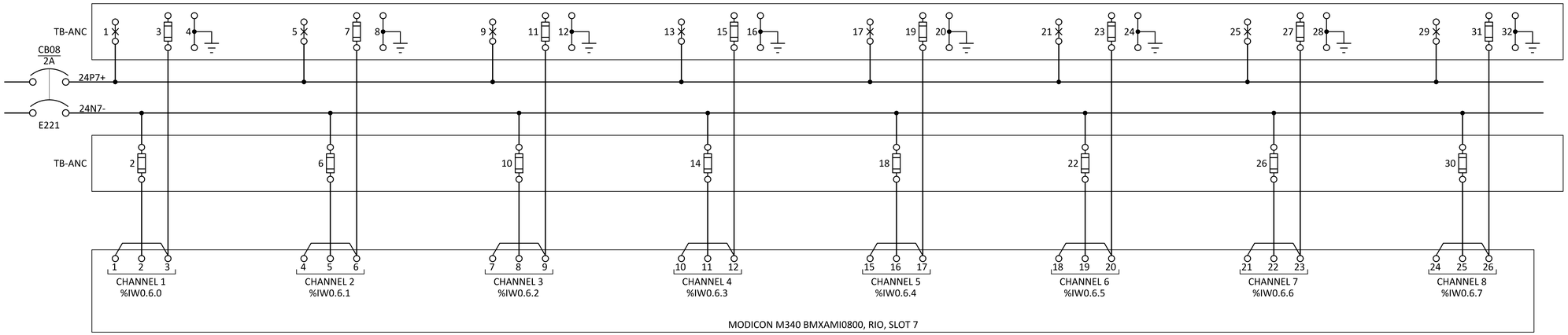

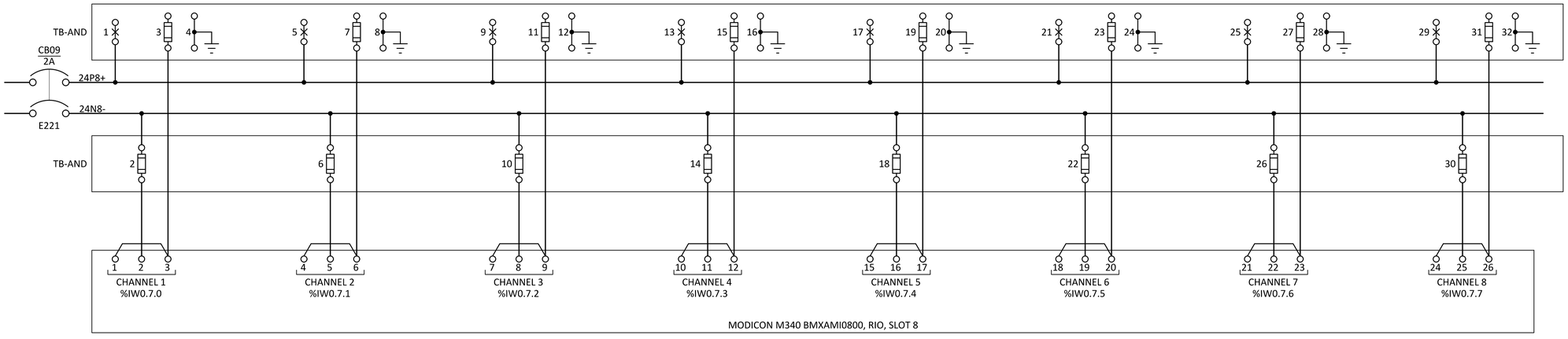

REVIEWED FOR CODE COMPLIANCE
Thomas W Peterson
12/14/2023
DIVISION OF FACILITIES CONSTRUCTION AND MANAGEMENT

DFCM CODE COMPLIANCE OFFICER

NO.	REVISIONS	BY	DATE
	PUBLISHED		
C	100% DESIGN REVIEW	JT	10/23
B	90% DESIGN REVIEW	JT	9/23
A	50% DESIGN REVIEW	JT	5/23

This document or any part thereof in detail or design concept is the property of Forsgren Associates Inc. and shall not be copied without the written authorization of Forsgren Associates Inc.

DRAWN DJ
DESIGNED MEC
APPROVED
QA MLL

ATTENTION
LINE IS 2-INCHES
AT 24"x36" SIZE
IF NOT 2-INCHES, SCALE DRAWING ACCORDINGLY

PROFESSIONAL ENGINEER
No. 9428479-2202
MATHEW LEWIS LAWSON
STATE OF UTAH
10/04/2023

FISHERIES EXPERIMENT STATION
UTAH DIVISION OF WILDLIFE RESOURCES
1465 WEST 200 NORTH
LOGAN, UTAH 84321

UTAH DNR WILDLIFE RESOURCES

McMillen

Blue Stakes of UTAH 811 Bluestakes.org

WARN WATER AQUACULTURE BUILDING
LOGAN HATCHERY IMPROVEMENT PROJECT

REMOTE I/O
SCHEMATIC ANALOG INPUT 3 & 4

PROJECT NO: 14-23-0005
SHEET NO: E328
DATE: 10-2023
PAGE NO: 150

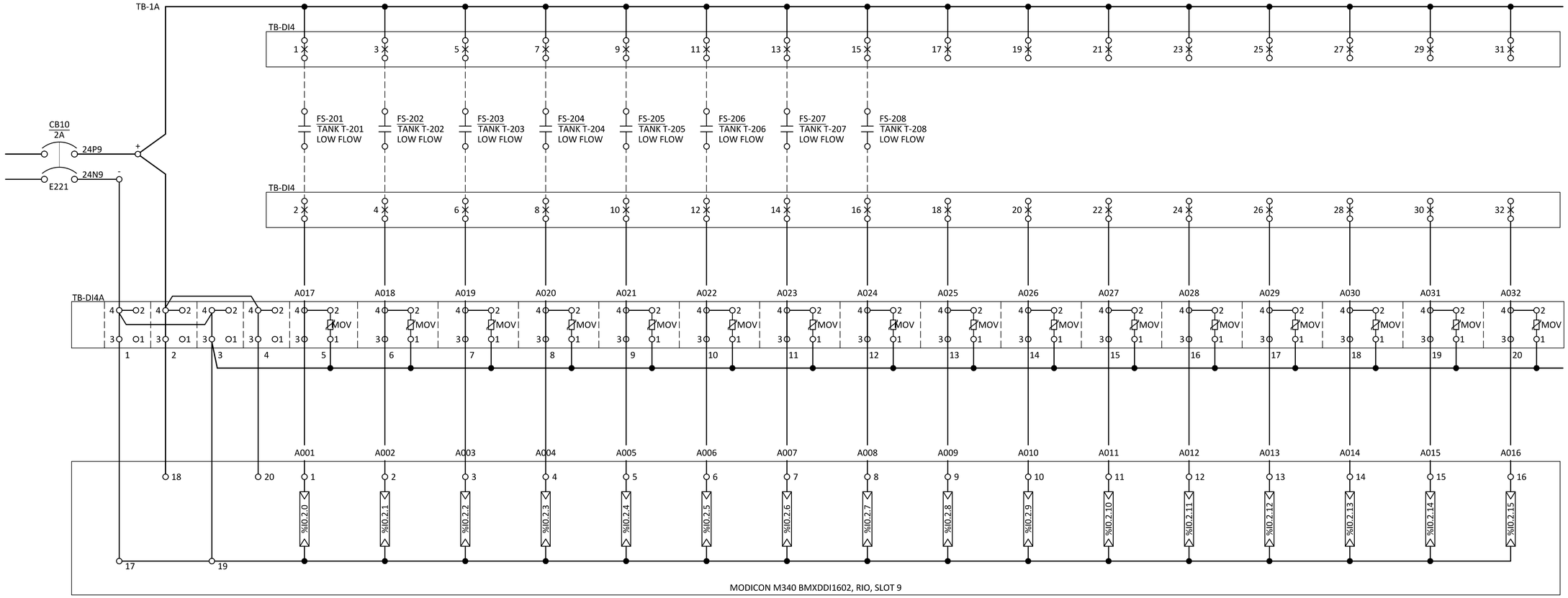

REVIEWED FOR CODE COMPLIANCE
Thomas W Peterson
12/14/2023
DIVISION OF FACILITIES CONSTRUCTION AND MANAGEMENT

DFCM CODE COMPLIANCE OFFICER

NO.	REVISIONS	BY	DATE
	PUBLISHED		
C	100% DESIGN REVIEW	JT	10/23
B	90% DESIGN REVIEW	JT	9/23
A	50% DESIGN REVIEW	JT	5/23

This document or any part thereof in detail or design concept is the property of Forsgren Associates Inc. and shall not be copied without the written authorization of Forsgren Associates Inc.

DRAWN DJ
DESIGNED MEC
APPROVED
QA MLL

ATTENTION
LINE IS 2-INCHES
AT 24"x36" SIZE
IF NOT 2-INCHES, SCALE DRAWING ACCORDINGLY

PROFESSIONAL ENGINEER
No. 9428479-2202
MATHEW LEWIS LAWSON
STATE OF UTAH
10/04/2023

FISHERIES EXPERIMENT STATION
UTAH DIVISION OF WILDLIFE RESOURCES
1465 WEST 200 NORTH
LOGAN, UTAH 84321

UTAH DNR WILDLIFE RESOURCES

McMillen

Blue Stakes of UTAH 811 Bluestakes.org

WARN WATER AQUACULTURE BUILDING
LOGAN HATCHERY IMPROVEMENT PROJECT

REMOTE I/O
SCHEMATIC DISCRETE INPUT 4

PROJECT NO: 14-23-0005
SHEET NO: E329
DATE: 10-2023
PAGE NO: 151

SHEET NOTES:

1. ANALOG OUTPUT MODULE IS SELF POWERED AND DOES NOT REQUIRE EXTERNAL POWER.
2. FUSES ARE 0.315A, LITTLEFUSE 50803150.

LEGEND:

NC NO CONNECTION

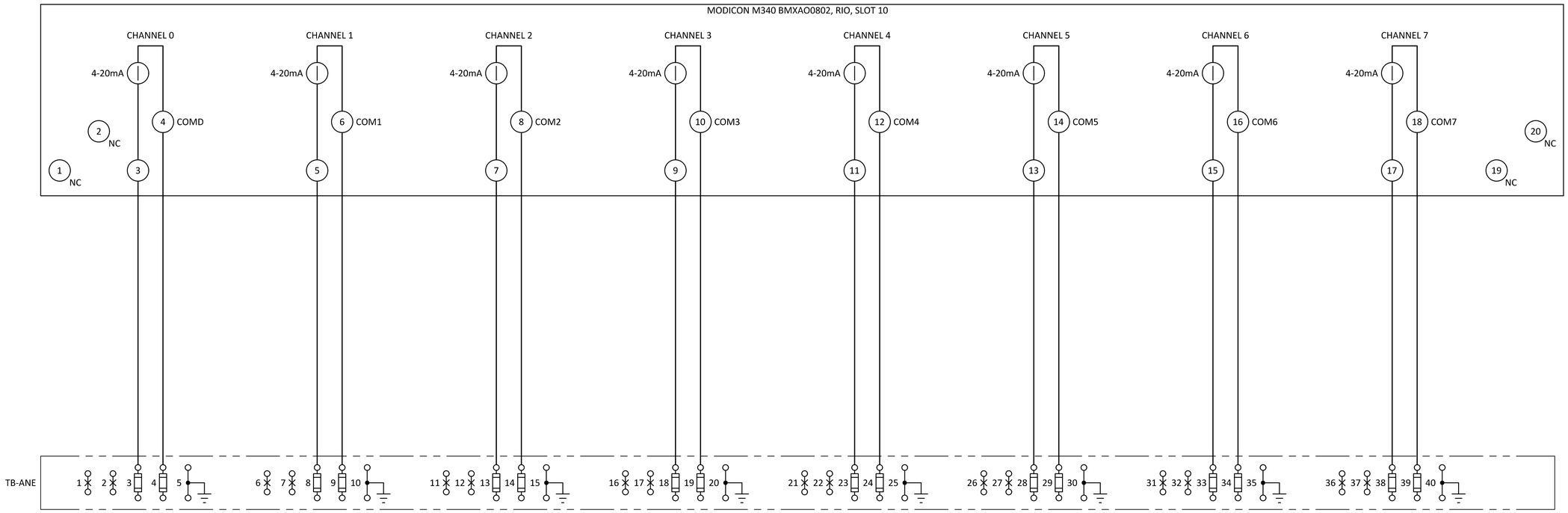

REVIEWED FOR CODE COMPLIANCE
Thomas W Peterson
12/14/2023
DIVISION OF FACILITIES CONSTRUCTION AND MANAGEMENT

DFCM CODE COMPLIANCE OFFICER

PUBLISHED			
C	100% DESIGN REVIEW	JT	10/23
B	90% DESIGN REVIEW	JT	9/23
A	50% DESIGN REVIEW	JT	5/23
NO.	REVISIONS	BY	DATE

This document or any part thereof in detail or design concept is the property of Forsgren Associates Inc. and shall not be copied without the written authorization of Forsgren Associates Inc.

DRAWN DJ
DESIGNED MEC
APPROVED
QA MLL

ATTENTION
LINE IS 2-INCHES
AT 24"x36" SIZE
IF NOT 2-INCHES, SCALE DRAWING ACCORDINGLY

PROFESSIONAL ENGINEER
No. 9428479-2202
MATHEW LEWIS LAWSON
STATE OF UTAH
10/04/2023

FISHERIES EXPERIMENT STATION
UTAH DIVISION OF WILDLIFE RESOURCES
1465 WEST 200 NORTH
LOGAN, UTAH 84321

UTAH DNR WILDLIFE RESOURCES

McMillen

Blue Stakes of UTAH 811 Bluestakes.org

WARN WATER AQUACULTURE BUILDING
LOGAN HATCHERY IMPROVEMENT PROJECT
REMOTE I/O
SCHEMATIC ANALOG OUTPUT

PROJECT NO: 14-23-0005
SHEET NO: E330
DATE: 10-2023
PAGE NO: 152

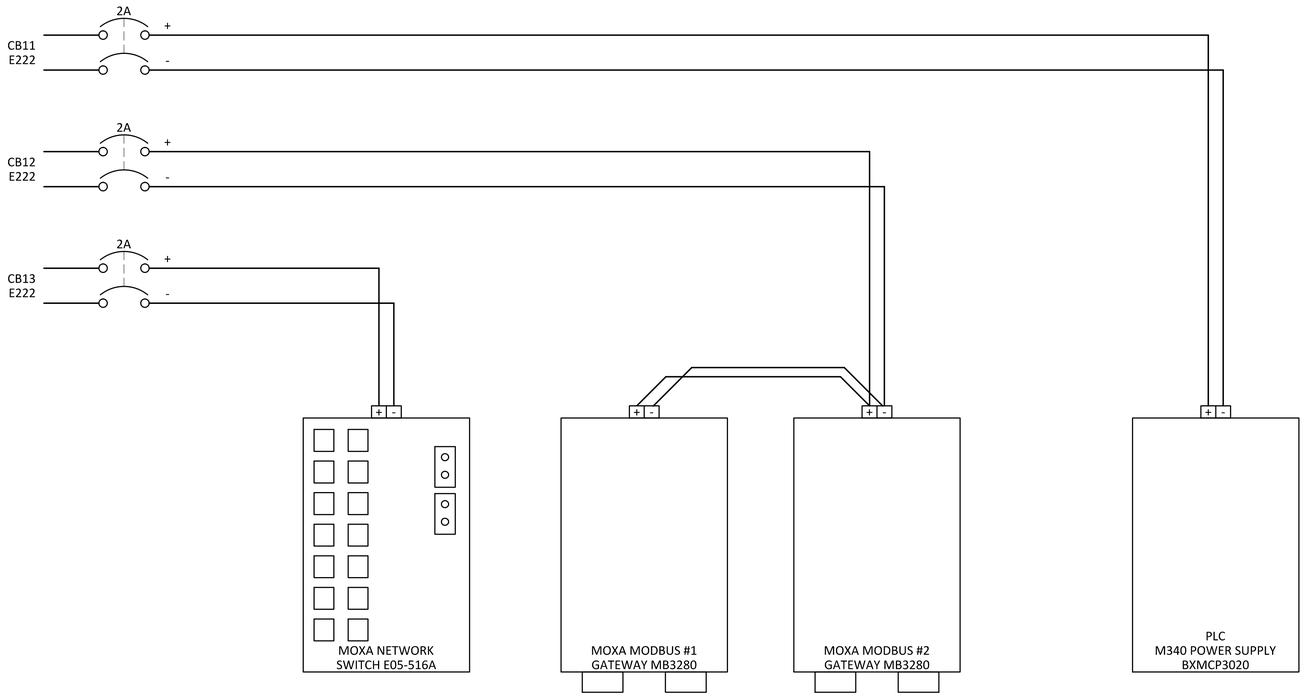

REVIEWED FOR CODE COMPLIANCE
Thomas W Peterson
12/1/2023
DIVISION OF FACILITIES CONSTRUCTION AND MANAGEMENT

DFCM CODE COMPLIANCE OFFICER

NO.	REVISIONS	BY	DATE
	PUBLISHED		
C	100% DESIGN REVIEW	JT	10/23
B	90% DESIGN REVIEW	JT	9/23
A	50% DESIGN REVIEW	JT	5/23

This document or any part thereof in detail or design concept is the property of Forsgren Associates Inc. and shall not be copied without the written authorization of Forsgren Associates Inc.

DRAWN DJ
DESIGNED MEC
APPROVED
QA MLL

ATTENTION
LINE IS 2-INCHES
AT 24"x36" SIZE
IF NOT 2-INCHES, SCALE DRAWING ACCORDINGLY

PROFESSIONAL ENGINEER
No. 9428479-2202
MATHEW LEWIS LAWSON
STATE OF UTAH
10/04/2023

FISHERIES EXPERIMENT STATION
UTAH DIVISION OF WILDLIFE RESOURCES
1465 WEST 200 NORTH
LOGAN, UTAH 84321

UTAH DNR WILDLIFE RESOURCES

McMillen

Blue Stakes of UTAH 811 Bluestakes.org

WARN WATER AQUACULTURE BUILDING
LOGAN HATCHERY IMPROVEMENT PROJECT

REMOTE I/O
MISCELLANEOUS 24VDC POWER

PROJECT NO: 14-23-0005
SHEET NO: E331
DATE: 10-2023
PAGE NO: 153

SHEET NOTES:

1. TYPICAL CONTROL SCHEMATIC FOR ALL THREE RAS MODULES.
2. MODULE 3 PUMP SIZES ARE 7.5HP, VFD CAT6 CONNECTIONS ARE TO NSW-01.
3. MODULE 3 480V POWER SUPPLIED FROM BRANCH CIRCUITS ORIGINATING FROM PANEL L1. MODULE 3 120V CONTROL POWER SUPPLIED FROM BRANCH CIRCUIT ORIGINATING FROM PANEL P1
4. VFDS PARAMETERS ARE CONFIGURED TO ONLY ALLOW TWO PUMPS TO RUN SIMULTANEOUSLY.
5. PUMP VFD OPERABLE MANUALLY FROM LOCAL DRIVE CP WITHOUT CONTROL POWER.

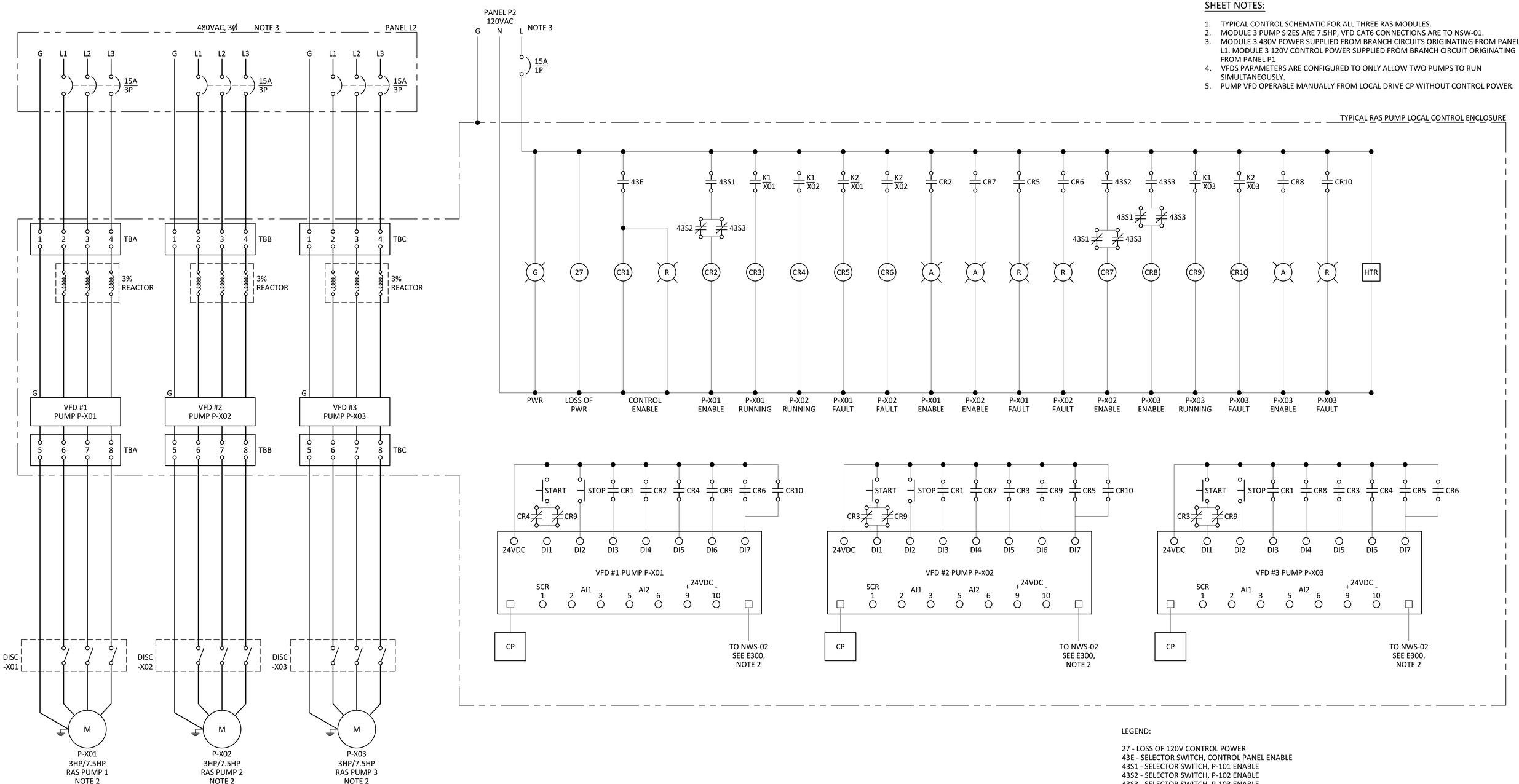

LEGEND:

27 - LOSS OF 120V CONTROL POWER
43E - SELECTOR SWITCH, CONTROL PANEL ENABLE
43S1 - SELECTOR SWITCH, P-101 ENABLE
43S2 - SELECTOR SWITCH, P-102 ENABLE
43S3 - SELECTOR SWITCH, P-103 ENABLE
K1 - VFD OUTPUT RELAY 1
K2 - VFD OUTPUT RELAY 2
CR - CONTROL RELAY
HTR - HEATER
SCR - SIGNAL CABLE SHIELD
AI - ANALOG INPUT
CP - CONTROL PANEL, ASSISTANT

REVIEWED FOR CODE COMPLIANCE
Thomas W Peterson
12/14/2023
DIVISION OF FACILITIES CONSTRUCTION AND MANAGEMENT
DFCM CODE COMPLIANCE OFFICER

NO.	REVISIONS	BY	DATE
C	100% DESIGN REVIEW	JT	10/23
B	90% DESIGN REVIEW	JT	9/23
A	50% DESIGN REVIEW	JT	5/23

This document or any part thereof in detail or design concept is the property of Forsgren Associates Inc. and shall not be copied without the written authorization of Forsgren Associates Inc.

DRAWN DJ
DESIGNED MEC
APPROVED
QA MLL

ATTENTION
LINE IS 2-INCHES
AT 24"x36" SIZE
IF NOT 2-INCHES, SCALE DRAWING ACCORDINGLY

PROFESSIONAL ENGINEER
No. 9428479-2202
MATHEW LEWIS LAWSON
STATE OF UTAH
10/04/2023

FISHERIES EXPERIMENT STATION
UTAH DIVISION OF WILDLIFE RESOURCES
1465 WEST 200 NORTH
LOGAN, UTAH 84321

UTAH DNR WILDLIFE RESOURCES

McMillen

Blue Stakes of UTAH 811 Bluestakes.org

WARN WATER AQUACULTURE BUILDING
LOGAN HATCHERY IMPROVEMENT PROJECT

RAS PUMP CONTROL SCHEMATIC

PROJECT NO: 14-23-0005
SHEET NO: E400
DATE: 10-2023
PAGE NO: 154

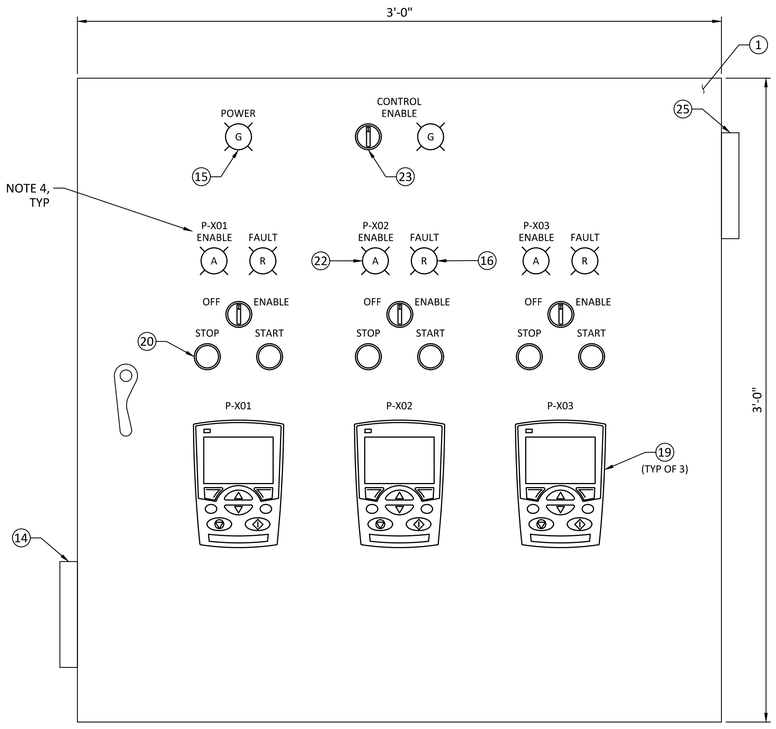

TYPICAL FRONT DOOR

SCALE: 3"= 1'-0" 0" 4" 8"

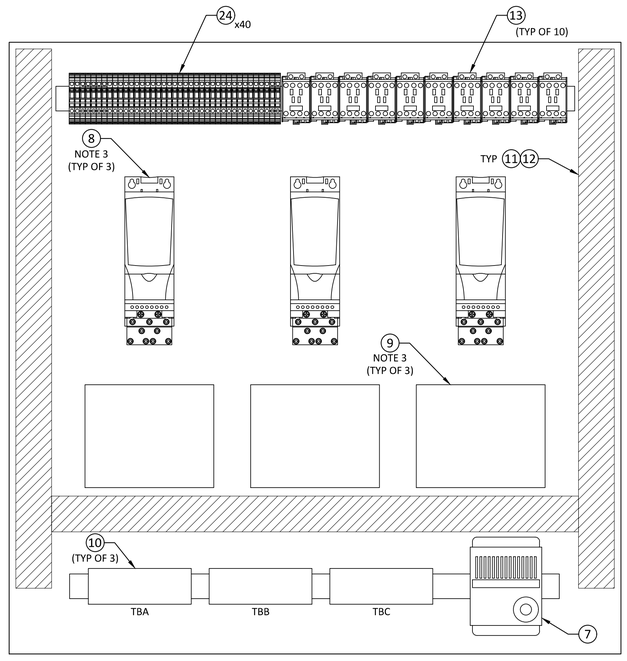

TYPICAL BACK PANEL

SCALE: 3"= 1'-0" 0" 4" 8"

MAX INTERNAL HEAT LOAD	MAX ENCLOSURE TEMPERATURE	MAX AMBIENT TEMPERATURE	COOLING AIR FLOW REQUIRED
791 W	104 F	90 F	180 CFM

SHEET NOTES:

1. CONTRACTOR TO PROVIDE WIRING DIAGRAM BASED ON SCHEMATIC PROVIDED.
2. TYPICAL PANEL LAYOUT FOR ALL THREE RAS MODULES.
3. FOR REUSE MODULE 3, ITEM #8 & #9 ARE REPLACED WITH ITEM #26 & #27 RESPECTIVELY.
4. PUMP LABELS CORRESPOND TO EACH MODULE'S PUMP LABEL

BILL OF MATERIALS

ITEM #	QTY	DESCRIPTION	MANUFACTURER	PART #
1	1	ENCLOSURE, NEMA 4	nVENT HOFFMAN	CSD363620
2	1	PANEL, BACK	nVENT HOFFMAN	CP3636
3	1	LOUVER	nVENT HOFFMAN	CSP3636
4	1	HANDLE, DOOR	nVENT HOFFMAN	CWHNL
5	1	DOOR STOP	nVENT HOFFMAN	ADSTOPK
6	A/R	SCREWS	nVENT HOFFMAN	AS1032
7	1	HEATER, 100W	nVENT HOFFMAN	DAH1001A
8	3	VFD, 3HP, 480VAC, 3-PHASE, FRAME R1	ABB	ACS310-03U-06A2-4
9	3	REACTOR, 3%	TCI	KDRMA8L1
10	3	TERMINAL BLOCKS, POWER, 8 POSTION	MARATHON	1508
11	A/R	WIREWAY, 2"	PANDUIT	
12	A/R	WIREWAY, COVER, 2"	PANDUIT	
13	10	RELAY, CONTROL, 2NO, 2NC, 110VAC	ALLEN BRADLEY	700-CF220KD
14	1	EXHAUST FAN, 120V, 224CFM, TYPE 3R	HAMMOND	PF65000T3RLG
15	2	LIGHT, INDICATOR, LED, 22MM, GREEN	ALLEN BRADLEY	800L-22L-10G
16	3	LIGHT, INDICATOR, LED, 22MM, RED	ALLEN BRADLEY	800L-22L-10R
17	1	SWITCH, SELECTOR, 3-POSITION, 30.5MM, 4NO, 4NC	ALLEN BRADLEY	800T-J28
18	A/R	DIN RAIL		
19	3	CONTROL PANEL, ASSISTANT	ABB	ACS-CP-A
20	6	PUSH BUTTON	ALLEN BRADLEY	800T-A1A
21	3	OUTPUT RELAY MODULE, VFD	ALLEN BRADLEY	MREL-01
22	3	LIGHT, INDICATOR, LED 22mm, AMBER	ALLEN BRADLEY	800L-22L-10A
23	4	SWITCH, SELECTOR, 2 POSITION	ALLEN BRADLEY	800T
24	40	TERMINAL BLOCKS, KNIFE SW, UT 4-MTL	PHOENIX	3046144
25	1	EXHAUST GRILLE, TYPE 3R	HAMMOND	PFA60000T3RLG
26	3	VFD, 7.5HP, 480VAC, 3-PHASE, FRAME R3	ABB	ACS310-03U-13A8-4
27	3	REACTOR, 3%	TCI	KDRAA4L2

REVIEWED FOR CODE COMPLIANCE
Thomas W Peterson
12/14/2023
DIVISION OF FACILITIES CONSTRUCTION AND MANAGEMENT

DFCM CODE COMPLIANCE OFFICER

NO.	REVISIONS	BY	DATE
	PUBLISHED		
C	100% DESIGN REVIEW	JT	10/23
B	90% DESIGN REVIEW	JT	9/23
A	50% DESIGN REVIEW	JT	5/23

This document or any part thereof in detail or design concept is the property of Forsgren Associates Inc. and shall not be copied without the written authorization of Forsgren Associates Inc.

DRAWN DJ
DESIGNED MEC
APPROVED
QA MLL

ATTENTION
LINE IS 2-INCHES AT 24"x36" SIZE
IF NOT 2-INCHES, SCALE DRAWING ACCORDINGLY

PROFESSIONAL ENGINEER
No. 9428479-2202
MATHEW LEWIS LAWSON
STATE OF UTAH
10/04/2023

FISHERIES EXPERIMENT STATION
UTAH DIVISION OF WILDLIFE RESOURCES
1465 WEST 200 NORTH
LOGAN, UTAH 84321

UTAH DNR WILDLIFE RESOURCES

McMillen

Blue Stakes of UTAH 811 Bluestakes.org

WARN WATER AQUACULTURE BUILDING
LOGAN HATCHERY IMPROVEMENT PROJECT

RAS PUMP CONTROL PANEL LAYOUT

PROJECT NO: 14-23-0005
SHEET NO: E401
DATE: 10-2023
PAGE NO: 155

INSTRUMENTATION / EQUIPMENT TAGS

EXAMPLE SYMBOL

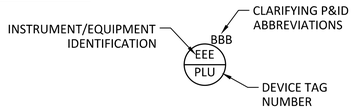

EXAMPLE TAG

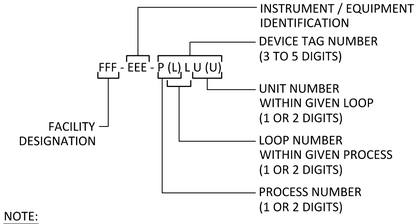

PROCESS NUMBER:

1 MODULE 1
2 MODULE 2
3 MODULE 3
4 INCUBATION
5
6
7
8
9

NOTE:

FACILITY DESIGNATION FOR ALL INSTRUMENTS ON THIS PROJECT SHALL BE 'XXX'. THIS HAS BEEN OMITTED ON THE DRAWINGS FOR BREVITY.

GENERAL INSTRUMENT OR FUNCTIONAL SYMBOLS

	FIELD MOUNTED	PRIMARY OR PANEL MOUNTED - ACCESSIBLE (1)	PRIMARY OR PANEL MOUNTED - INACCESSIBLE (2)	SECONDARY OR MCC MOUNTED - ACCESSIBLE (1)	SECONDARY OR MCC MOUNTED - INACCESSIBLE (2)
INSTRUMENT	EEE PLU	EEE PLU	EEE PLU	EEE PLU	EEE PLU
SHARED DISPLAY SHARED CONTROL OR HMI	EEE PLU	EEE PLU	EEE PLU	EEE PLU	EEE PLU
INDICATING LIGHTS	EEE PLU	EEE PLU	N/A	EEE PLU	N/A

(1) NORMALLY ACCESSIBLE TO OPERATOR
(2) NORMALLY INACCESSIBLE TO OPERATOR (BEHIND-THE-PANEL)

SPECIAL CASE INSTRUMENT OR FUNCTIONAL SYMBOLS

- SINGLE INSTRUMENT OR OTHER COMPONENT HAVING MULTIPLE FUNCTIONS
- I — RELAY INTERLOCK LOGIC - SEE SCHEMATICS OR SPECIFICATIONS FOR MORE INFORMATION
- EEE PLU OO — ON-OFF HAND SWITCH, MAINTAINED CONTACT (CONTROLLED DEVICE WILL RESTART ON RETURN OF POWER AFTER POWER FAILURE)
- EEE PLU SS — START-STOP HAND SWITCH, MOMENTARY CONTACT (CONTROLLED DEVICE WILL NOT RESTART ON RETURN OF POWER AFTER POWER FAILURE)
- 24 VDC — POWER SUPPLY (SIZE AS NOTED)
- AS — AIR SUPPLY
- PRIMARY ELECTRICAL POWER (120V / 60 HZ UNLESS INDICATED OTHERWISE)
- ✳ — INDICATES VENDOR PACKAGE
- CR — CONTROL RELAY
- LIGHTNING SURGE ARRESTOR
- M — MOTOR

PRIMARY ELEMENT SYMBOLS

- PARSHALL FLUME
- WEIR
- ORIFICE PLATE
- FLOW TUBE
- PITOT-STATIC
- VORTEX METER
- PROPELLER OR TURBINE METER
- THERMAL FLOWMETER
- LEVEL (BUBBLER TUBE)
- LSH PLU — LEVEL (FLOAT)
- FI PLU — ROTAMETER
- DE PLU — DENSITY METER
- XX PLU — GENERIC
- LE PLU — LEVEL (ULTRASONIC)

INSTRUMENTATION IDENTIFICATION TABLE

FIRST LETTER			SUCCEEDING LETTER(S)		
LETTER	MEASURED INITIATING VARIABLE	VARIABLE MODIFIER	READOUT OR PASSIVE FUNCTION	OUTPUT OR ACTIVE FUNCTION	FUNCTION MODIFIER
A	ANALYSIS (+)		ALARM		
B	BURNER, COMBUSTION				
C	CONDUCTIVITY			CONTROL	CLOSED
D	DENSITY (S.G.)	DIFFERENTIAL			
E	VOLTAGE		SENSOR (PRIMARY ELEMENT)		
F	FLOW RATE	RATIO (FRACTION)			
G	GAUGE		GLASS, GAUGE, VIEWING DEVICE	GATE	
H	HAND (MANUAL)				HIGH
I	CURRENT (ELECTRICAL)		INDICATE		
J	POWER	SCAN			
K	TIME, TIME SCHEDULE	TIME RATE OF CHANGE		CONTROL STATION	
L	LEVEL		LIGHT (PILOT)		LOW
M	MOTION	MOMENTARY			MIDDLE, INTERMEDIATE
N	TORQUE		ISOLATE	ISOLATOR	
O			ORIFICE, RESTRICTION		OPEN
P	PRESSURE (VACUUM), PNEUMATIC		POINT (TEST) CONNECTION		
Q	QUANTITY	INTEGRATE, TOTALIZE			
R	RADIATION/ RESISTANCE (ELECTRICAL)		RECORD OR PRINT		
S	SPEED, FREQUENCY	SAFETY		SWITCH	
T	TEMPERATURE			TRANSMIT	
U	MULTI VARIABLE		MULTIFUNCTION	MULTIFUNCTION	MULTIFUNCTION
V	VIBRATION, MECHANICAL ANALYSIS			VALVE, DAMPER, LOUVER	
W	WEIGHT, FORCE		WELL		
X	INTRUSION	X-AXIS			
Y	EVENT, STATE OR PRESENCE	Y-AXIS		RELAY, COMPUTE, CONVERT	
Z	POSITION, DIMENSION	Z-AXIS		DRIVER, ACTUATOR, FINAL CONTROL ELEMENT	

EQUIPMENT IDENTIFICATION TABLE

ACT	ACTUATOR	P	PUMP
AFD	ADJUSTABLE FREQUENCY DRIVE	PCP	PLANT CONTROL PANEL
ATS	AUTOMATIC TRANSFER SWITCH	PFL	PRE-FILTER
CV	CHECK VALVE	PLC	PROGRAMMABLE LOGIC CONTROLLER
DCU	DISTRIBUTED CONTROL UNIT	RCT	RECTIFIER
ECP	ENVIRONMENTAL CONTROL PANEL (HVAC)	RIO	REMOTE I/O UNIT
EF	EXHAUST FAN	RTU	REMOTE TELEMETRY UNIT
FCP	FIRE ALARM SYSTEM CONTROL PANEL	SEC	SECURITY CONTROL PANEL
FIL	FILTER	SHG	SODIUM HYPOCHLORITE GENERATOR
FOR	FIBER OPTIC REPEATER	STR	STRAINER
FOT	FIBER OPTIC TRANSCEIVER	TNK	TANK
GEN	GENERATOR	UPS	UNINTERRUPTABLE POWER SUPPLY
HMI	HUMAN-MACHINE INTERFACE	UVR	UV REACTOR
LCP	LOCAL CONTROL PANEL	V	VALVE
LCS	LOCAL CONTROL STATION	VCP	VENDOR CONTROL PANEL
MCC	MOTOR CONTROL CENTER	VFD	VARIABLE FREQUENCY DRIVE
MCP	MAIN CONTROL PANEL	VSP	VENDOR SUPPLIED PANEL
MOV	MOTOR OPERATED VALVE	WS	WATER SOFTENER
MS	MOTOR STARTER	YLT	EVENT PILOT LIGHT
MTR	MOTOR	ZZK	SECURITY GATE INTERFACE

INSTRUMENTATION LINE SYMBOLOGY

- PRIMARY PROCESS (CLOSED CONDUIT, DASHED LINE INDICATES ALTERNATE FLOW STREAM)
- PRIMARY PROCESS (OPEN CHANNEL)
- ANALOG SIGNAL, (4 TO 20 mAdc, ECT)
- DISCRETE SIGNAL, (ON/OFF, ECT)
- PNEUMATIC SIGNAL
- X — X FILLED SYSTEM SIGNAL
- L — L HYDRAULIC SYSTEM SIGNAL
- DIGITAL DATA LINK
- PACKAGE SYSTEM EQUIPMENT
- STRUCTURE/FACILITY BOUNDARY
- CABLE FURNISHED WITH EQUIPMENT
- M — M MECHANICAL POWER/LINKAGE
- E — E ELECTRICAL POWER

PARALLELING LINES

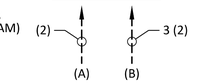

(A) TOTAL OF 2 SIGNALS

(B) 3 TYPICAL SETS OF 2 SIGNALS EACH. TOTAL OF 6 SIGNALS.

CONNECTING LINES

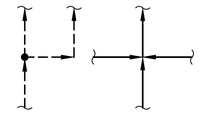

NON-CONNECTING LINES

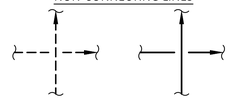

SYSTEM CONTINUATION INTERFACES

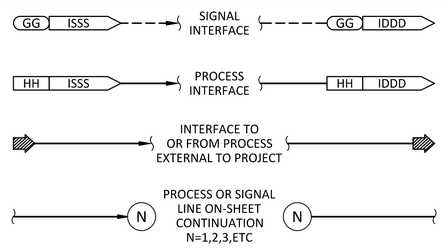

GG SIGNAL INTERFACE NO.
HH PROCESS INTERFACE NO.
DDD DESTINATION DRAWING NO.
SSS SOURCE DRAWING NO.

SIGNAL SYSTEM INTERFACES

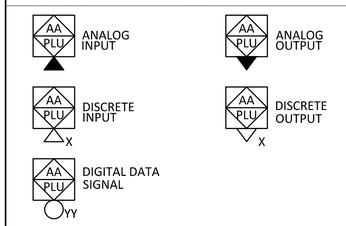

AA = I/O DESIGNATION

YY = DIGITAL PROTOCOL

X: H-MAINTAINED/LATCHING
M = MOMENTARY/FOLLOWER

ANALOG I/O DESIGNATORS

CR	CHLORINE RESIDUAL
DO	DISSOLVED OXYGEN
DP	DIFFERENTIAL PRESSURE
FL	FLOW
LC	
LE	LOWER EXPLOSIVE LIMIT
LV	LEVEL
MO	MANIPULATED OUTPUT
PH	ACIDITY
PO	POSITION
PR	PRESSURE
PV	PROCESS VARIABLE
SP	SPEED
TE	TEMPERATURE
TU	TURBIDITY
YA	

DIGITAL PROTOCOL DESIGNATORS

DN	DEVICENET
IP	ETHERNET /IP
MB	MODBUS RTU
PB	PROFIBUS
PL	PARALLEL
SL	SERIAL
TC	MODBUS TCP

DISCRETE I/O DESIGNATORS

AM	AUTO-MANUAL
AU	AUTO
CL	CLOSED
EN	ENABLE
EL	POWER AVAILABLE
FA	FIRE ALARM
FW	FORWARD / REVERSE
HH	HI-HI LEVEL
HI	HI LEVEL
LF	LOW FLOW
LL	LOW-LOW LEVEL
LO	LOW LEVEL
MN	MANUAL
OO	ON-OFF
OP	OPEN
RB	RUN BOOSTER
RC	RUN CLOSED
RE	REMOTE
RF	RUN FORWARD
RG	RUNNING
RN	RUN-STOP
RO	RUN-OPEN
RR	RUN-REVERSE
RV	REVERSE
YA	FAULT
SU	SUPERVISORY
SW	SELECTION
TR	TROUBLE

P&ID ABBREVIATIONS

AC	ALTERNATING CURRENT
AM	AUTO-MANUAL
COD	CHEMICAL OXYGEN DEMAND
DEV	DEVIATION
DC	DIRECT CURRENT
DCS	DISTRIBUTED CONTROL SYSTEM
ECS	ENVIRONMENTAL CONTROL SYSTEM (HVAC)
EPO	EMERGENCY POWER OFF
FAS	FIRE ALARM SYSTEM
FOC	FIBER OPTIC CABLE
FOS	FAST-OFF-SLOW
FOSA	FAST-OFF-SLOW-AUTO
FOSR	FAST-OFF-SLOW-REMOTE
HI	HIGH
HML	HIGH-MID-LOW
HOA	HAND-OFF-AUTO
HOR	HAND-OFF-REMOTE
ISR	INTRINSICALLY SAFE RELAY
LEL	LOWER EXPLOSIVE LIMIT
LO	LOW
LOR	LOCAL-OFF-REMOTE
LOS	LOCKOUT STOP
LR	LOCAL-REMOTE
MC	MODULATE-CLOSE
MOA	MANUAL-OFF-AUTO
MSC	MANUFACTURER SUPPLIED CABLE
NC	NORMALLY CLOSED
NO	NORMALLY OPEN
OC	OPEN-CLOSE(D)
OCA	OPEN-CLOSE-AUTO
OCR	OPEN-CLOSE-REMOTE
OI	OPERATOR INTERFACE
OO	ON-OFF
OOA	ON-OFF-AUTO
OOR	ON-OFF-REMOTE
ORP	OXIDATION REDUCTION POTENTIAL
OSC	OPEN-STOP-CLOSE
PC	PERSONAL COMPUTER, ETHERNET PORT FOR
PCS	PLANT CONTROL SYSTEM
pH	HYDROGEN ION CONCENTRATION
PID	PROPORTIONAL INTEGRAL DERIVATIVE CONTROL
POT	POTENTIOMETER
RC	RUN CLOSE
RO	RUN OPEN
RL	RAISE-LOWER
RM	REMOTE MULTIPLEXING MODULE
RSL	RAISE-STOP-LOWER
RVSS	REDUCED VOLTAGE SOLID-STATE STARTER
SCADA	SUPERVISORY CONTROL AND DATA ACQUISITION
SEL	SELECT
SET	SET POINT
SF	SLOWER-FASTER
SHC	SODIUM HYPOCHLORITE
SR	START-RESET
SS	START-STOP
SSC	SUPERVISORY SET POINT CONTROL
ST	START
SW	SEAL WATER
TC	THERMOCOUPLE
TCR	TOTAL CHLORINE RESIDUAL
TEMP	TEMPERATURE
TSP	TWISTED SHIELD PAIR
TURB	TURBIDITY
VHC	VOLATILE HYDROCARBONS
VIB	VIBRATION
VSP	VENDOR SUPPLIED PANEL
VTO	VENT TO OUTSIDE
WSEL	WATER SURFACE ELEVATION

REVIEWED FOR CODE COMPLIANCE
Thomas W Peterson
12/1/2023
DIVISION OF FACILITIES CONSTRUCTION AND MANAGEMENT

DFCM CODE COMPLIANCE OFFICER

NO.	REVISIONS	BY	DATE
	PUBLISHED		
C	100% DESIGN REVIEW	JT	10/23
B	90% DESIGN REVIEW	JT	9/23
A	50% DESIGN REVIEW	JT	5/23

This document or any part thereof in detail or design concept is the property of Forsgren Associates Inc. and shall not be copied without the written authorization of Forsgren Associates Inc.

DRAWN DJ
DESIGNED MEC
APPROVED
QA MLL

ATTENTION
LINE IS 2-INCHES
AT 24"x36" SIZE
IF NOT 2-INCHES, SCALE DRAWING ACCORDINGLY

PROFESSIONAL ENGINEER — No. 9428479-2202 — MATHEW LEWIS LAWSON — STATE OF UTAH
10/04/2023

FISHERIES EXPERIMENT STATION
UTAH DIVISION OF WILDLIFE RESOURCES
1465 WEST 200 NORTH
LOGAN, UTAH 84321

UTAH DNR WILDLIFE RESOURCES

McMillen

Blue Stakes of UTAH 811 Bluestakes.org

WARN WATER AQUACULTURE BUILDING
LOGAN HATCHERY IMPROVEMENT PROJECT

INSTRUMENTATION LEGEND, SYMBOLS, AND ABBREVIATIONS

PROJECT NO: 14-23-0005
SHEET NO: GI001
DATE: 10-2023
PAGE NO: 156

SHEET NOTES:

1. SIGNALS CONSIST OF DISCRETE LOW FLOW AND DISCRETE LOW LEVEL FOR EACH TANK.
2. CONTRACTOR'S INTEGRATOR TO ASSIGN PLC AND P&ID DEVICE TAG NUMBERS.

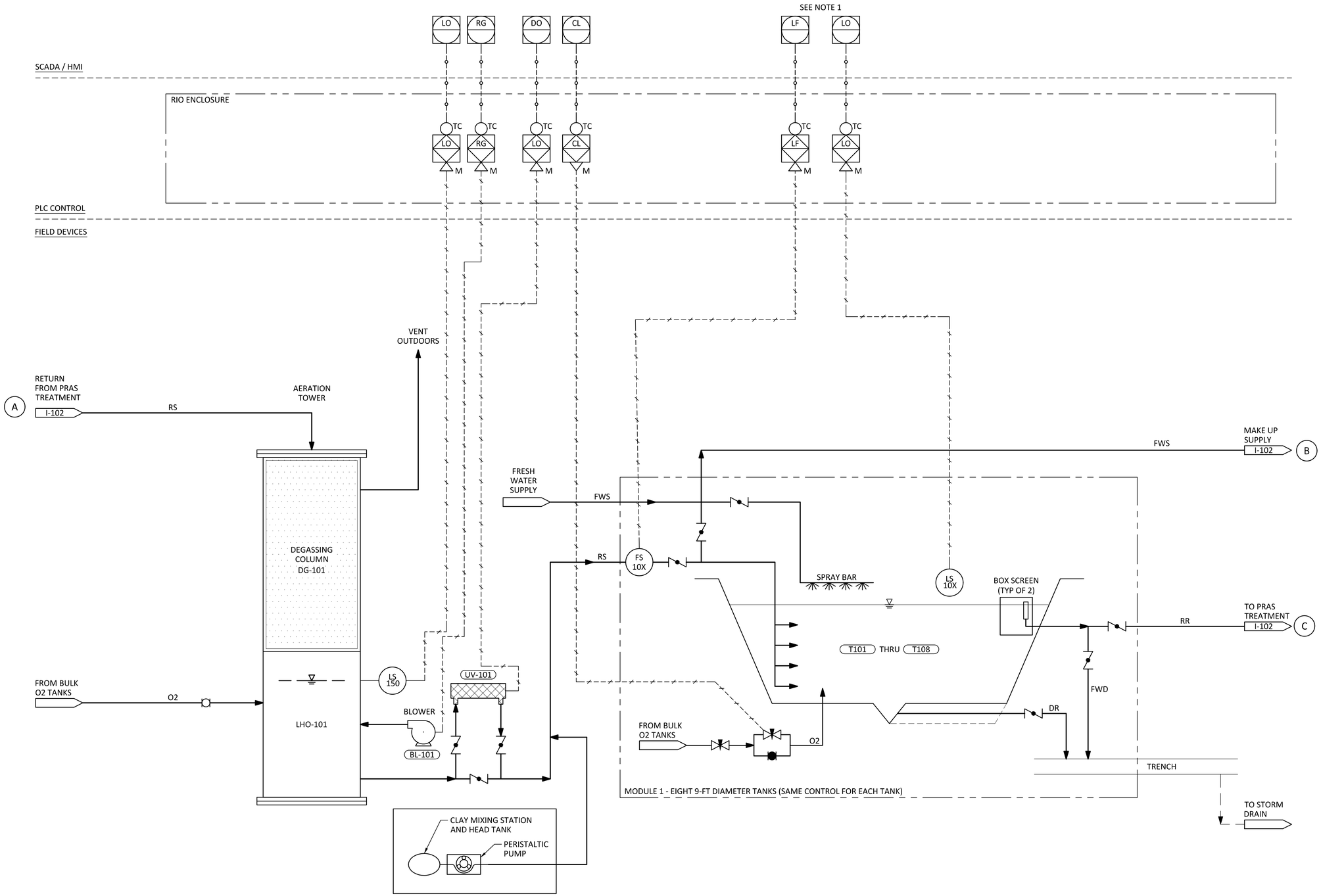

REVIEWED FOR CODE COMPLIANCE
Thomas W Peterson
12/14/2023
DIVISION OF FACILITIES CONSTRUCTION AND MANAGEMENT

DFCM CODE COMPLIANCE OFFICER

PUBLISHED			
C	100% DESIGN REVIEW	JT	10/23
B	90% DESIGN REVIEW	JT	9/23
A	50% DESIGN REVIEW	JT	5/23
NO.	REVISIONS	BY	DATE

This document or any part thereof in detail or design concept is the property of Forsgren Associates Inc. and shall not be copied without the written authorization of Forsgren Associates Inc.

DRAWN DJ
DESIGNED MEC
APPROVED
QA MLL

ATTENTION
LINE IS 2-INCHES
AT 24"x36" SIZE
IF NOT 2-INCHES, SCALE DRAWING ACCORDINGLY

PROFESSIONAL ENGINEER
No. 9428479-2202
MATHEW LEWIS LAWSON
STATE OF UTAH
10/04/2023

FISHERIES EXPERIMENT STATION
UTAH DIVISION OF WILDLIFE RESOURCES
1465 WEST 200 NORTH
LOGAN, UTAH 84321

UTAH DNR WILDLIFE RESOURCES

McMillen

Blue Stakes of UTAH 811 Bluestakes.org

WARN WATER AQUACULTURE BUILDING
LOGAN HATCHERY IMPROVEMENT PROJECT
HATCHERY BUILDING
RAS MODULE 1 P&ID 1
AERATION TOWER AND REARING TANKS

PROJECT NO: 14-23-0005
SHEET NO: I101
DATE: 10-2023
PAGE NO: 157

SCADA / HMI

RIO ENCLOSURE

PLC CONTROL

LOCAL DEVICES

FIELD DEVICES

DRUM FILTER CONTROL PANEL

LOCAL CONTROL PANEL
LCP-100

MAKE UP SUPPLY
FM-103
V-167

FROM MODULE 1 TANKS
I-101
FM-102

MICROSCREEN DRUM FILTER
DF-101

BACKWASH PUMP

DRUM MOTOR

MEDIA SCREEN (TYP)

MBBR

SUMP T-111

FM-101

TO AERATION TOWER AND TANKS
I-101

P-101
P-102
P-103

BOILER
B-101

B-101 HEAT EXCHANGER

TO STORM DRAIN

REVIEWED FOR CODE COMPLIANCE
Thomas W Peterson
12/1/2023
DIVISION OF FACILITIES CONSTRUCTION AND MANAGEMENT
DFCM CODE COMPLIANCE OFFICER

NO.	REVISIONS	BY	DATE
C	100% DESIGN REVIEW	JT	10/23
B	90% DESIGN REVIEW	JT	9/23
A	50% DESIGN REVIEW	JT	5/23

This document or any part thereof in detail or design concept is the property of Forsgren Associates Inc. and shall not be copied without the written authorization of Forsgren Associates Inc.

DRAWN DJ
DESIGNED MEC
APPROVED
QA MLL

ATTENTION
LINE IS 2-INCHES
AT 24"x36" SIZE
IF NOT 2-INCHES, SCALE DRAWING ACCORDINGLY

PROFESSIONAL ENGINEER
No. 9428479-2202
MATHEW LEWIS LAWSON
STATE OF UTAH
10/04/2023

FISHERIES EXPERIMENT STATION
UTAH DIVISION OF WILDLIFE RESOURCES
1465 WEST 200 NORTH
LOGAN, UTAH 84321

UTAH DNR WILDLIFE RESOURCES

McMillen

Blue Stakes of UTAH 811 Bluestakes.org

WARN WATER AQUACULTURE BUILDING
LOGAN HATCHERY IMPROVEMENT PROJECT
HATCHERY BUILDING
RAS MODULE 1 P&ID 2
DRUM FILTERS, BIOFILTER, RAS PUMPING, AND UV

PROJECT NO: 14-23-0005
SHEET NO: I102
DATE: 10-2023
PAGE NO: 158

SHEET NOTES:

1. SIGNALS CONSIST OF DISCRETE LOW FLOW AND DISCRETE LOW LEVEL FOR EACH TANK.
2. CONTRACTOR'S INTEGRATOR TO ASSIGN PLC AND P&ID DEVICE TAG NUMBERS.

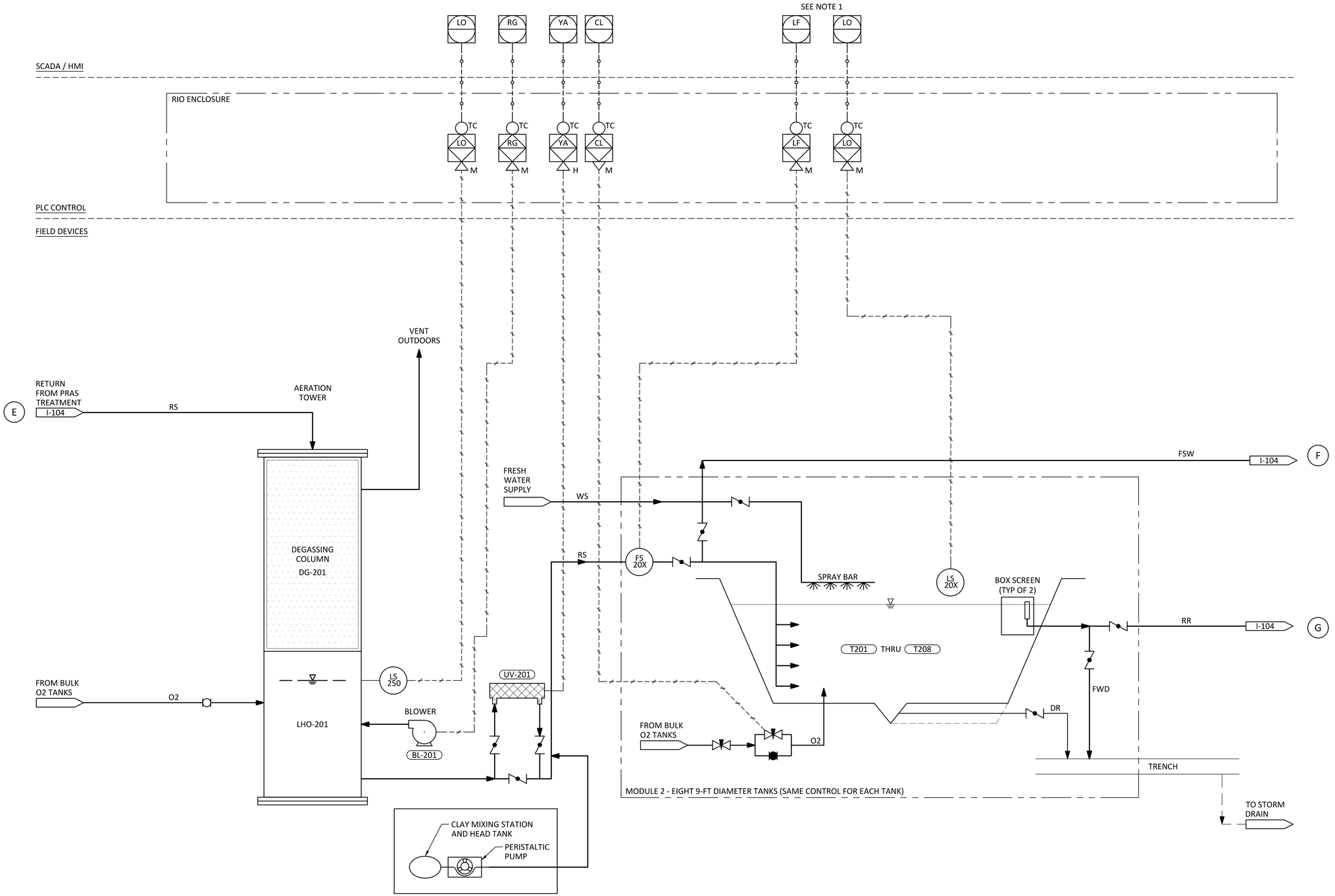

REVIEWED FOR CODE COMPLIANCE
Thomas W Peterson
12/1/2023
DIVISION OF FACILITIES CONSTRUCTION AND MANAGEMENT

DFCM CODE COMPLIANCE OFFICER

NO.	REVISIONS	BY	DATE
	PUBLISHED		
C	100% DESIGN REVIEW	JT	10/23
B	90% DESIGN REVIEW	JT	9/23
A	50% DESIGN REVIEW	JT	5/23

This document or any part thereof in detail or design concept is the property of Forsgren Associates Inc. and shall not be copied without the written authorization of Forsgren Associates Inc.

DRAWN DJ
DESIGNED MEC
APPROVED
QA MLL

ATTENTION
LINE IS 2-INCHES
AT 24"x36" SIZE
IF NOT 2-INCHES, SCALE DRAWING ACCORDINGLY

PROFESSIONAL ENGINEER
No. 9428479-2202
MATHEW LEWIS LAWSON
STATE OF UTAH
10/04/2023

FISHERIES EXPERIMENT STATION
UTAH DIVISION OF WILDLIFE RESOURCES
1465 WEST 200 NORTH
LOGAN, UTAH 84321

UTAH DNR WILDLIFE RESOURCES

McMillen

Blue Stakes of UTAH 811
Bluestakes.org

WARN WATER AQUACULTURE BUILDING
LOGAN HATCHERY IMPROVEMENT PROJECT
HATCHERY BUILDING
RAS MODULE 2 P&ID 1
AERATION TOWER AND REARING TANKS

PROJECT NO: 14-23-0005
SHEET NO: I103
DATE: 10-2023
PAGE NO: 159

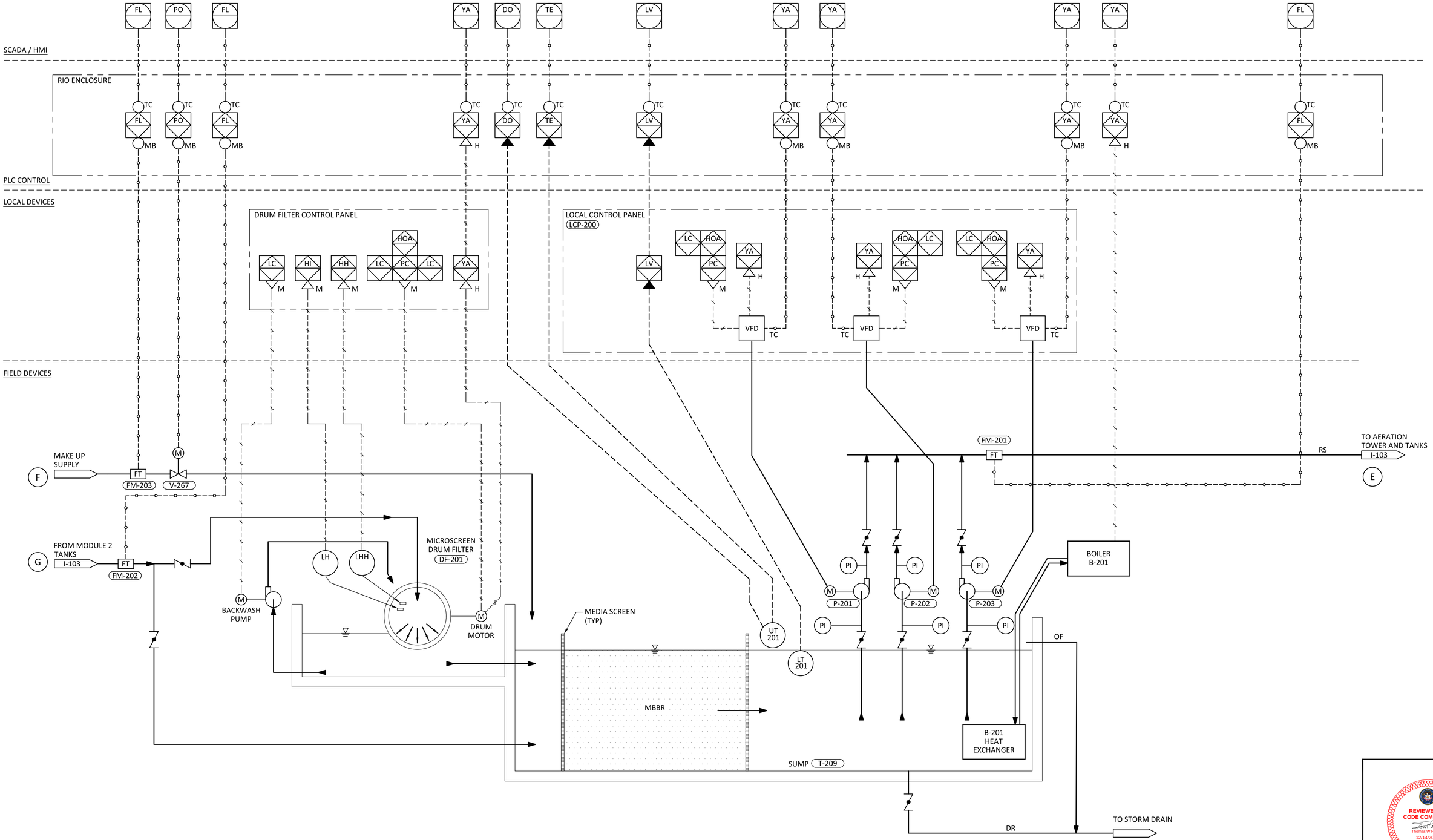

REVIEWED FOR CODE COMPLIANCE
Thomas W Peterson
12/14/2023
DIVISION OF FACILITIES CONSTRUCTION AND MANAGEMENT

DFCM CODE COMPLIANCE OFFICER

	PUBLISHED		
C	100% DESIGN REVIEW	JT	10/23
B	90% DESIGN REVIEW	JT	9/23
A	50% DESIGN REVIEW	JT	5/23
NO.	REVISIONS	BY	DATE

This document or any part thereof in detail or design concept is the property of Forsgren Associates Inc. and shall not be copied without the written authorization of Forsgren Associates Inc.

DRAWN DJ
DESIGNED MEC
APPROVED
QA MLL

ATTENTION
LINE IS 2-INCHES
AT 24"x36" SIZE
IF NOT 2-INCHES, SCALE DRAWING ACCORDINGLY

PROFESSIONAL ENGINEER
No. 9428479-2202
MATHEW LEWIS LAWSON
STATE OF UTAH
10/04/2023

FISHERIES EXPERIMENT STATION
UTAH DIVISION OF WILDLIFE RESOURCES
1465 WEST 200 NORTH
LOGAN, UTAH 84321

UTAH DNR WILDLIFE RESOURCES

McMillen

Blue Stakes of UTAH 811 Bluestakes.org

WARN WATER AQUACULTURE BUILDING
LOGAN HATCHERY IMPROVEMENT PROJECT

HATCHERY BUILDING
RAS MODULE 2 P&ID 2
DRUM FILTERS, BIOFILTER, RAS PUMPING, AND UV

PROJECT NO: 14-23-0005
SHEET NO: I104
DATE: 10-2023
PAGE NO: 160

SHEET NOTES:

1. SIGNALS CONSIST OF DISCRETE LOW FLOW AND DISCRETE LOW LEVEL FOR EACH TANK.
2. CONTRACTOR'S INTEGRATOR TO ASSIGN PLC AND P&ID DEVICE TAG NUMBERS.

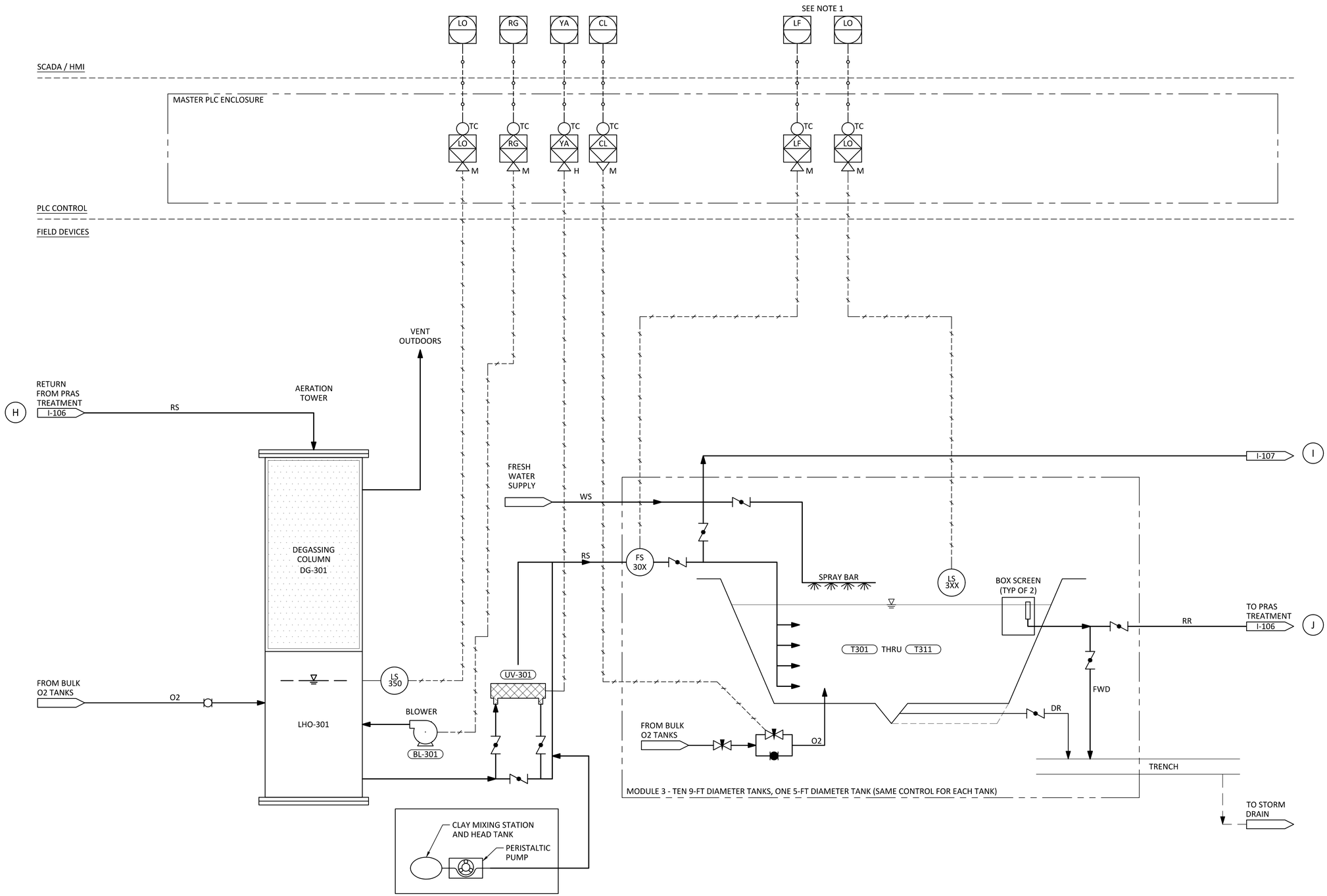

REVIEWED FOR CODE COMPLIANCE
Thomas W Peterson
12/14/2023
DIVISION OF FACILITIES CONSTRUCTION AND MANAGEMENT

DFCM CODE COMPLIANCE OFFICER

PUBLISHED			
NO.	REVISIONS	BY	DATE
C	100% DESIGN REVIEW	JT	10/23
B	90% DESIGN REVIEW	JT	9/23
A	50% DESIGN REVIEW	JT	5/23

This document or any part thereof in detail or design concept is the property of Forsgren Associates Inc. and shall not be copied without the written authorization of Forsgren Associates Inc.

DRAWN DJ
DESIGNED MEC
APPROVED
QA MLL

ATTENTION
LINE IS 2-INCHES
AT 24"x36" SIZE
IF NOT 2-INCHES, SCALE DRAWING ACCORDINGLY

PROFESSIONAL ENGINEER
No. 9428479-2202
MATHEW LEWIS LAWSON
STATE OF UTAH
10/04/2023

FISHERIES EXPERIMENT STATION
UTAH DIVISION OF WILDLIFE RESOURCES
1465 WEST 200 NORTH
LOGAN, UTAH 84321

UTAH DNR WILDLIFE RESOURCES

McMillen

Blue Stakes of UTAH 811 Bluestakes.org

WARN WATER AQUACULTURE BUILDING
LOGAN HATCHERY IMPROVEMENT PROJECT

HATCHERY BUILDING
RAS MODULE 3 P&ID 1
AERATION TOWER AND REARING TANKS

PROJECT NO: 14-23-0005
SHEET NO: I105
DATE: 10-2023
PAGE NO: 161

SCADA / HMI

PLC CONTROL

LOCAL CONTROL

FIELD DEVICES

MASTER PLC ENCLOSURE

DRUM FILTER CONTROL PANEL

LOCAL CONTROL PANEL
LCP-300

FROM FWS

FM-303

V-389

FROM MODULE 3 TANKS
I-105

FM-302

MICROSCREEN DRUM FILTER
DF-301

BACKWASH PUMP

DRUM MOTOR

MEDIA SCREEN (TYP)

MBBR

SUMP T-314

FM-301

TO AERATION TOWER AND TANKS
I-105

BOILER B-301

P-301

P-302

P-303

UT 301

LT 301

B-301 HEAT EXCHANGER

TO STORM DRAIN

REVIEWED FOR CODE COMPLIANCE
Thomas W Peterson
12/1/4/2023
DIVISION OF FACILITIES CONSTRUCTION AND MANAGEMENT

DFCM CODE COMPLIANCE OFFICER

NO.	REVISIONS	BY	DATE
	PUBLISHED		
C	100% DESIGN REVIEW	JT	10/23
B	90% DESIGN REVIEW	JT	9/23
A	50% DESIGN REVIEW	JT	5/23

This document or any part thereof in detail or design concept is the property of Forsgren Associates Inc. and shall not be copied without the written authorization of Forsgren Associates Inc.

DRAWN DJ

DESIGNED MEC

APPROVED

QA MLL

ATTENTION

LINE IS 2-INCHES AT 24"x36" SIZE

IF NOT 2-INCHES, SCALE DRAWING ACCORDINGLY

PROFESSIONAL ENGINEER
No. 9428479-2202
MATHEW LEWIS LAWSON
STATE OF UTAH
10/04/2023

FISHERIES EXPERIMENT STATION
UTAH DIVISION OF WILDLIFE RESOURCES
1465 WEST 200 NORTH
LOGAN, UTAH 84321

UTAH DNR WILDLIFE RESOURCES

McMillen

Blue Stakes of UTAH 811
Bluestakes.org

WARN WATER AQUACULTURE BUILDING
LOGAN HATCHERY IMPROVEMENT PROJECT

HATCHERY BUILDING
RAS MODULE 3 P&ID 2
DRUM FILTER, BIOFILTER, RAS PUMPING, AND UV

PROJECT NO: 14-23-0005

SHEET NO: I106

DATE: 10-2023

PAGE NO: 162

SHEET NOTES:

1. CONTRACTOR'S INTEGRATOR TO ASSIGN PLC AND P&ID DEVICE TAG NUMBERS.

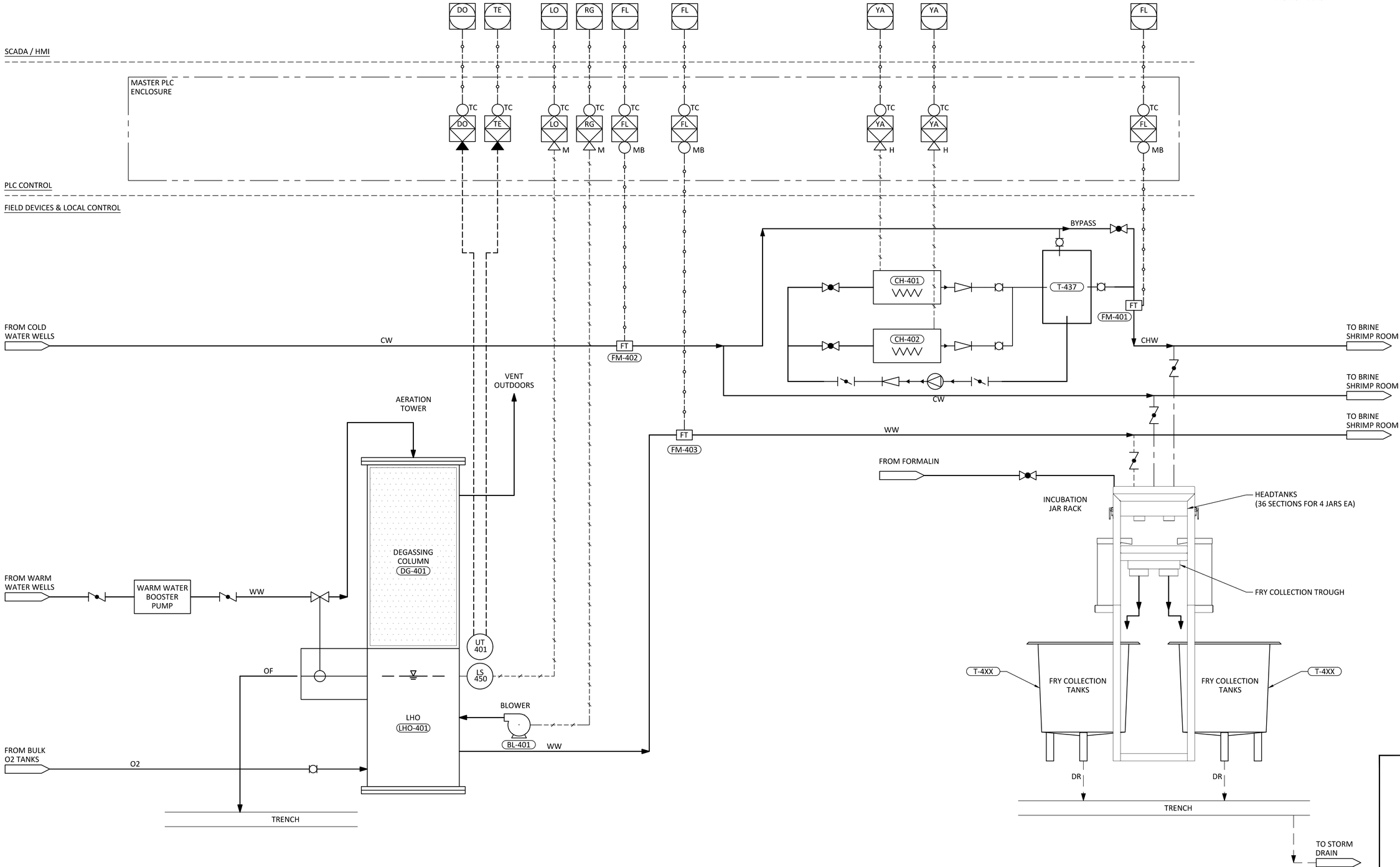

REVIEWED FOR CODE COMPLIANCE
Thomas W Peterson
12/14/2023
DIVISION OF FACILITIES CONSTRUCTION AND MANAGEMENT

DFCM CODE COMPLIANCE OFFICER

NO.	REVISIONS	BY	DATE
	PUBLISHED		
C	100% DESIGN REVIEW	JT	10/23
B	90% DESIGN REVIEW	JT	9/23
A	50% DESIGN REVIEW	JT	5/23

This document or any part thereof in detail or design concept is the property of Forsgren Associates Inc. and shall not be copied without the written authorization of Forsgren Associates Inc.

DRAWN DJ
DESIGNED MEC
APPROVED
QA MLL

ATTENTION
LINE IS 2-INCHES
AT 24"x36" SIZE
IF NOT 2-INCHES, SCALE DRAWING ACCORDINGLY

PROFESSIONAL ENGINEER
No. 9428479-2202
MATHEW LEWIS LAWSON
STATE OF UTAH
10/04/2023

FISHERIES EXPERIMENT STATION
UTAH DIVISION OF WILDLIFE RESOURCES
1465 WEST 200 NORTH
LOGAN, UTAH 84321

UTAH DNR WILDLIFE RESOURCES

McMillen

Blue Stakes of UTAH 811 Bluestakes.org

WARN WATER AQUACULTURE BUILDING
LOGAN HATCHERY IMPROVEMENT PROJECT

HATCHERY BUILDING
INCUBATION P&ID

PROJECT NO: 14-23-0005
SHEET NO: I107
DATE: 10-2023
PAGE NO: 163

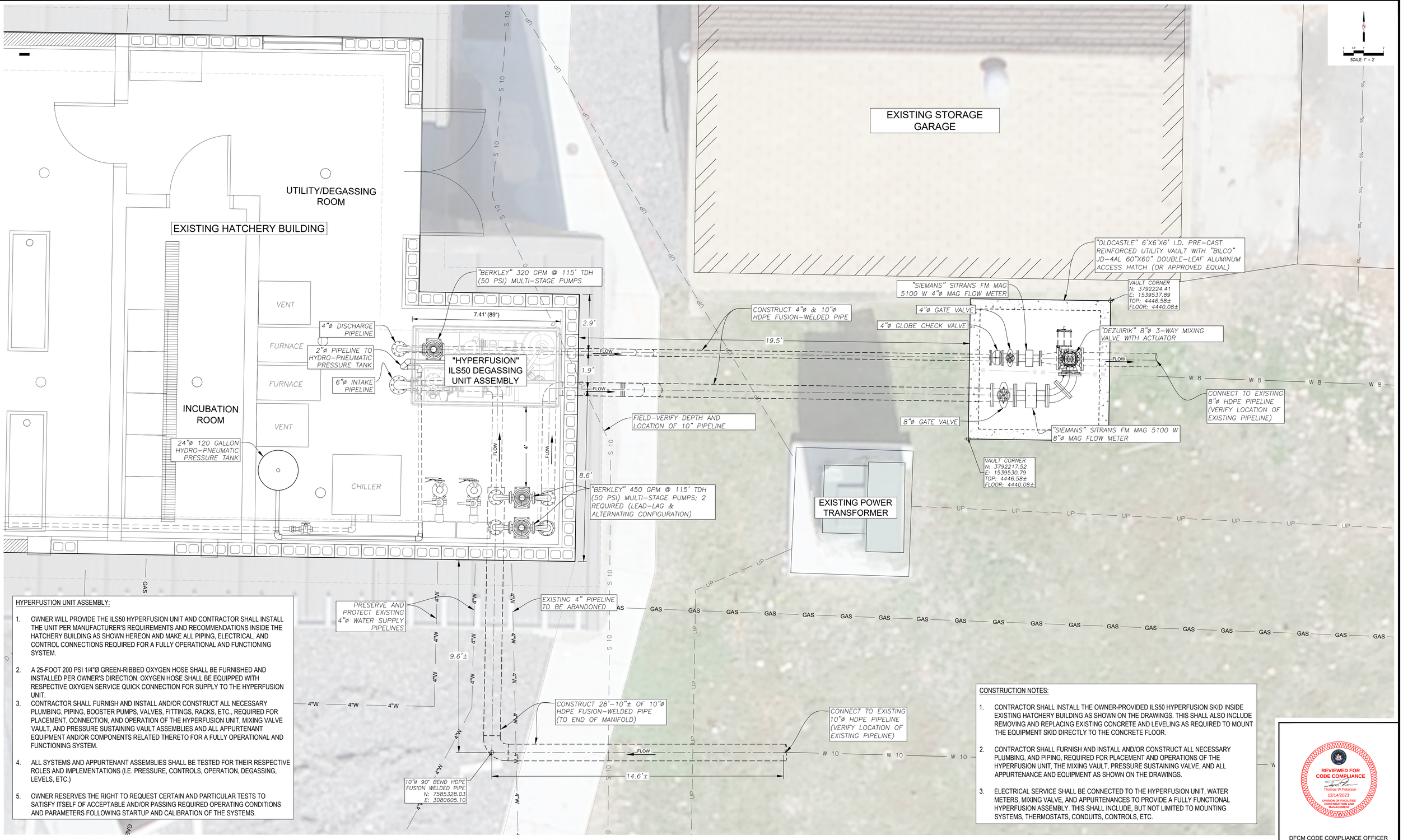

HYPERFUSTION UNIT ASSEMBLY:

1. OWNER WILL PROVIDE THE ILS50 HYPERFUSION UNIT AND CONTRACTOR SHALL INSTALL THE UNIT PER MANUFACTURER'S REQUIREMENTS AND RECOMMENDATIONS INSIDE THE HATCHERY BUILDING AS SHOWN HEREON AND MAKE ALL PIPING, ELECTRICAL, AND CONTROL CONNECTIONS REQUIRED FOR A FULLY OPERATIONAL AND FUNCTIONING SYSTEM.
2. A 25-FOOT 200 PSI 1/4"Ø GREEN-RIBBED OXYGEN HOSE SHALL BE FURNISHED AND INSTALLED PER OWNER'S DIRECTION. OXYGEN HOSE SHALL BE EQUIPPED WITH RESPECTIVE OXYGEN SERVICE QUICK CONNECTION FOR SUPPLY TO THE HYPERFUSION UNIT.
3. CONTRACTOR SHALL FURNISH AND INSTALL AND/OR CONSTRUCT ALL NECESSARY PLUMBING, PIPING, BOOSTER PUMPS, VALVES, FITTINGS, RACKS, ETC., REQUIRED FOR PLACEMENT, CONNECTION, AND OPERATION OF THE HYPERFUSION UNIT, MIXING VALVE VAULT, AND PRESSURE SUSTAINING VAULT ASSEMBLIES AND ALL APPURTENANT EQUIPMENT AND/OR COMPONENTS RELATED THERETO FOR A FULLY OPERATIONAL AND FUNCTIONING SYSTEM.
4. ALL SYSTEMS AND APPURTENANT ASSEMBLIES SHALL BE TESTED FOR THEIR RESPECTIVE ROLES AND IMPLEMENTATIONS (I.E. PRESSURE, CONTROLS, OPERATION, DEGASSING, LEVELS, ETC.)
5. OWNER RESERVES THE RIGHT TO REQUEST CERTAIN AND PARTICULAR TESTS TO SATISFY ITSELF OF ACCEPTABLE AND/OR PASSING REQUIRED OPERATING CONDITIONS AND PARAMETERS FOLLOWING STARTUP AND CALIBRATION OF THE SYSTEMS.

CONSTRUCTION NOTES:

1. CONTRACTOR SHALL INSTALL THE OWNER-PROVIDED ILS50 HYPERFUSION SKID INSIDE EXISTING HATCHERY BUILDING AS SHOWN ON THE DRAWINGS. THIS SHALL ALSO INCLUDE REMOVING AND REPLACING EXISTING CONCRETE AND LEVELING AS REQUIRED TO MOUNT THE EQUIPMENT SKID DIRECTLY TO THE CONCRETE FLOOR.
2. CONTRACTOR SHALL FURNISH AND INSTALL AND/OR CONSTRUCT ALL NECESSARY PLUMBING, AND PIPING, REQUIRED FOR PLACEMENT AND OPERATIONS OF THE HYPERFUSION UNIT, THE MIXING VAULT, PRESSURE SUSTAINING VALVE, AND ALL APPURTENANCE AND EQUIPMENT AS SHOWN ON THE DRAWINGS.
3. ELECTRICAL SERVICE SHALL BE CONNECTED TO THE HYPERFUSION UNIT, WATER METERS, MIXING VALVE, AND APPURTENANCES TO PROVIDE A FULLY FUNCTIONAL HYPERFUSION ASSEMBLY. THIS SHALL INCLUDE, BUT NOT LIMITED TO MOUNTING SYSTEMS, THERMOSTATS, CONDUITS, CONTROLS, ETC.

REVIEWED FOR CODE COMPLIANCE
Thomas W Peterson
12/14/2023
DIVISION OF FACILITIES CONSTRUCTION AND MANAGEMENT
DFCM CODE COMPLIANCE OFFICER

NO.	REVISIONS	BY	DATE
	PUBLISHED		

This document or any part thereof in detail or design concept is the property of Forsgren Associates Inc. and shall not be copied without the written authorization of Forsgren Associates Inc.

DRAWN
DESIGNED
APPROVED
QA

ATTENTION
LINE IS 2-INCHES
AT 24"x36" SIZE
IF NOT 2-INCHES, SCALE DRAWING ACCORDINGLY

ERIC E. DURSTELER NO. 323794 10-4-23 STATE OF UTAH LICENSED PROFESSIONAL ENGINEER

LOGAN FISH HATCHERY
UTAH DIVISION OF WILDLIFE RESOURCES
1465 WEST 200 NORTH
LOGAN, UTAH 84321

UTAH DNR WILDLIFE RESOURCES

FORSGREN Associates Inc.
95 WEST 100 SOUTH, STE. 115, LOGAN, UT 84321
PH: 435.227.0333 FAX: 435.227.0334

Blue Stakes of UTAH 811 BlueStakes.org

WARM WATER AQUACULTURE BUILDING
LOGAN HATCHERY IMPROVEMENT PROJECT

HYPERFUSION DEGASSING UNIT GENERAL SITE PLAN

PROJECT NO: 14-23-0005
SHEET NO: H001
DATE: 10-4-2023
PAGE NO: 164

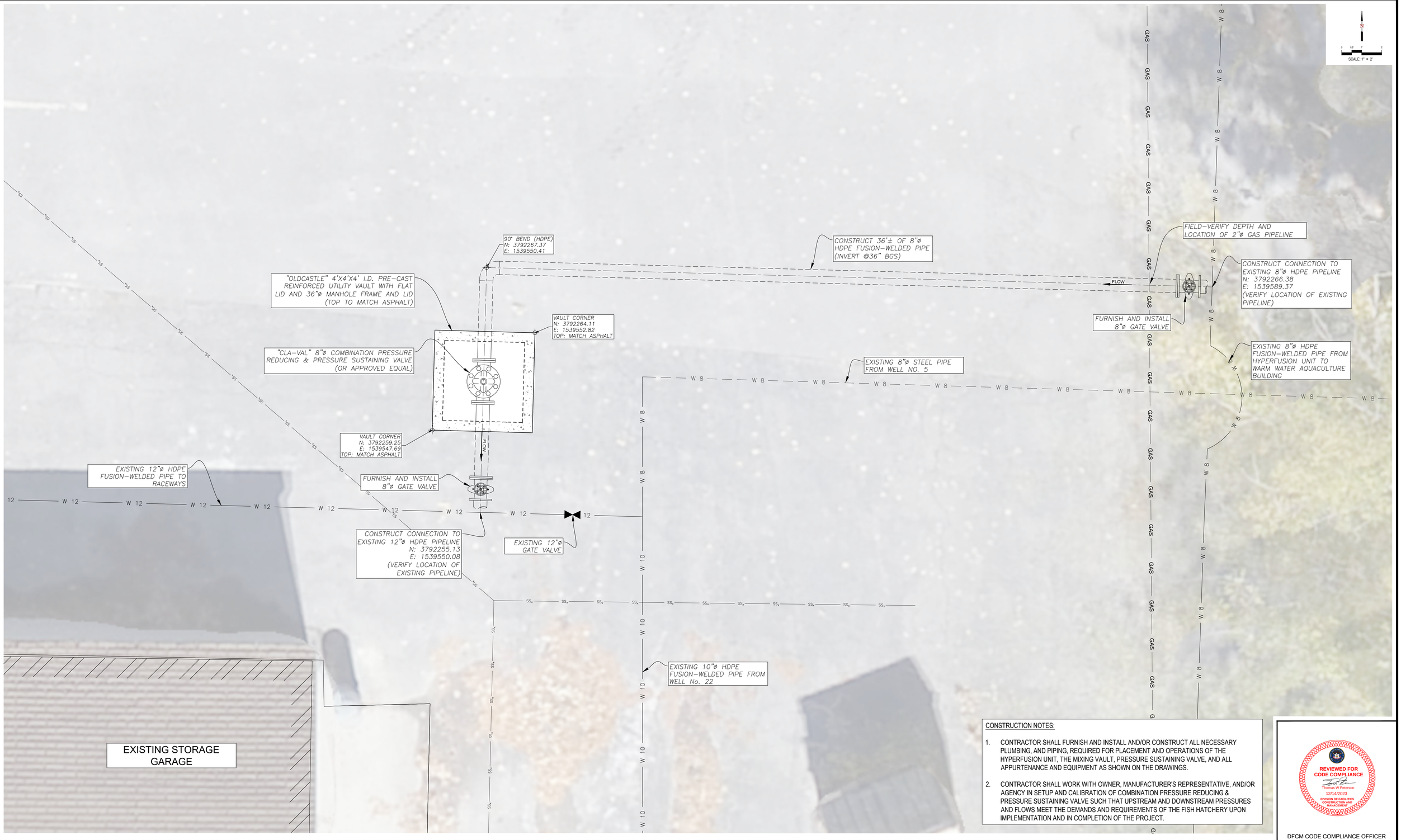

CONSTRUCTION NOTES:

1. CONTRACTOR SHALL FURNISH AND INSTALL AND/OR CONSTRUCT ALL NECESSARY PLUMBING, AND PIPING, REQUIRED FOR PLACEMENT AND OPERATIONS OF THE HYPERFUSION UNIT, THE MIXING VAULT, PRESSURE SUSTAINING VALVE, AND ALL APPURTENANCE AND EQUIPMENT AS SHOWN ON THE DRAWINGS.
2. CONTRACTOR SHALL WORK WITH OWNER, MANUFACTURER'S REPRESENTATIVE, AND/OR AGENCY IN SETUP AND CALIBRATION OF COMBINATION PRESSURE REDUCING & PRESSURE SUSTAINING VALVE SUCH THAT UPSTREAM AND DOWNSTREAM PRESSURES AND FLOWS MEET THE DEMANDS AND REQUIREMENTS OF THE FISH HATCHERY UPON IMPLEMENTATION AND IN COMPLETION OF THE PROJECT.

REVIEWED FOR CODE COMPLIANCE
Thomas W Peterson
12/14/2023
DIVISION OF FACILITIES CONSTRUCTION AND MANAGEMENT
DFCM CODE COMPLIANCE OFFICER

NO.	REVISIONS	BY	DATE

PUBLISHED

This document or any part thereof in detail or design concept is the property of Forsgren Associates Inc. and shall not be copied without the written authorization of Forsgren Associates Inc.

DRAWN
DESIGNED
APPROVED
QA

ATTENTION
LINE IS 2-INCHES
AT 24"x36" SIZE
IF NOT 2-INCHES, SCALE DRAWING ACCORDINGLY

LICENSED PROFESSIONAL ENGINEER
ERIC E. DURSTELER
NO. 323794
10-4-23
STATE OF UTAH

LOGAN FISH HATCHERY
UTAH DIVISION OF WILDLIFE RESOURCES
1465 WEST 200 NORTH
LOGAN, UTAH 84321

UTAH DNR WILDLIFE RESOURCES

FORSGREN Associates Inc.
95 WEST 100 SOUTH, STE. 115, LOGAN, UT 84321
PH: 435.227.0333 FAX: 435.227.0334

Blue Stakes of UTAH 811 Bluestakes.org

WARM WATER AQUACULTURE BUILDING
LOGAN HATCHERY IMPROVEMENT PROJECT

PRESSURE SUSTAINING VALVE & PIPING SITE PLAN

PROJECT NO: 14-23-0005
SHEET NO: H002
DATE: 10-4-2023
PAGE NO: 165

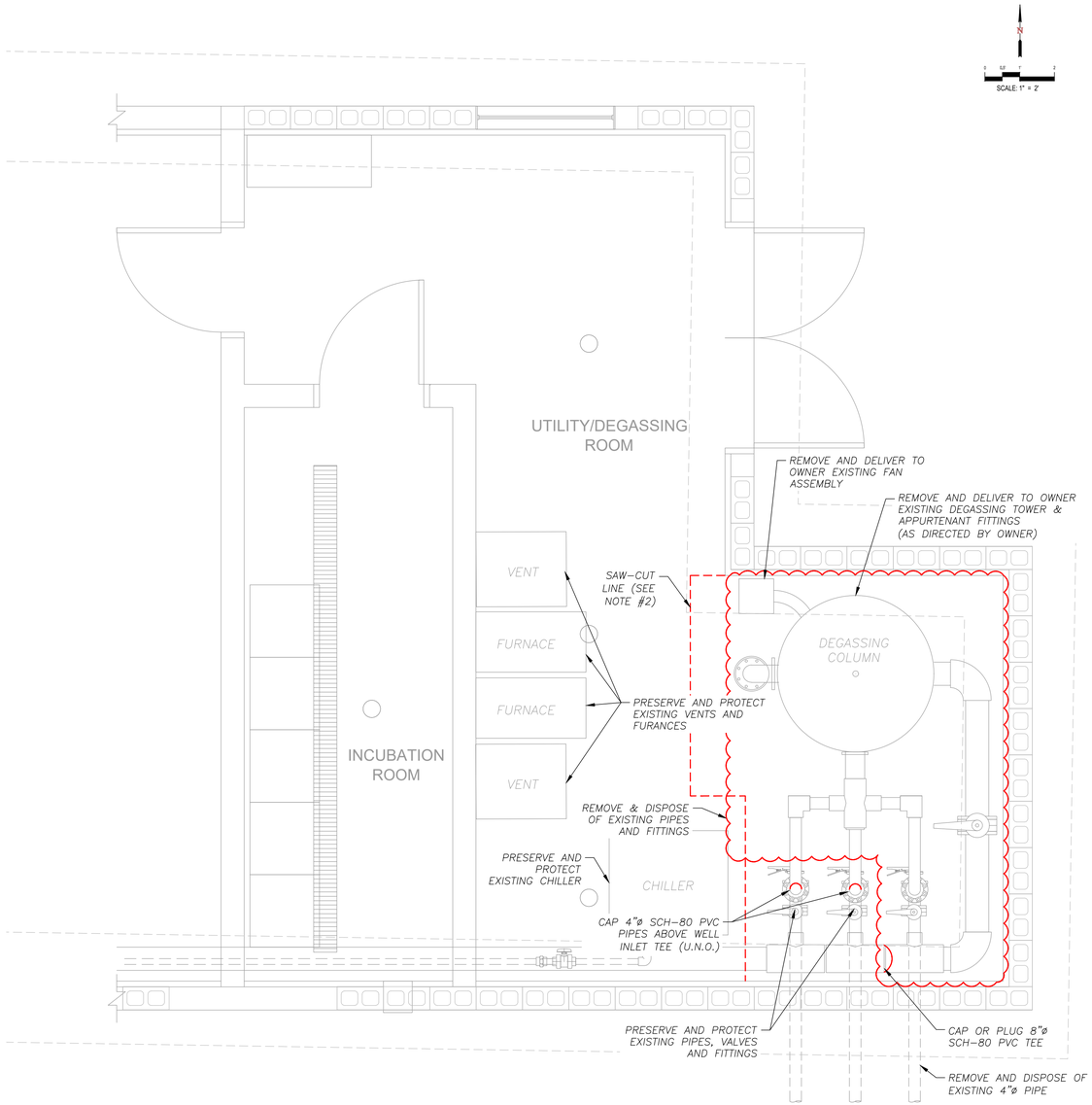

HATCHERY BUILDING - EXISTING DEGASSING TOWER - DEMOLITION AND REMOVAL PLAN 1

SCALE 1" = 2'

DEMOLITION AND REMOVAL NOTES:

1. *ALL ITEMS REMOVED SHALL BE PRESERVED, PROTECTED AND DELIVERED TO OWNER AS NOTED HEREON.*
2. *EXISTING CONCRETE FLOOR AND RESPECTIVE BURIED PIPING TO BE REMOVED TO FACILITATE CONSTRUCTION OF NEW PIPING.*
3. *"U.N.O" – UNLESS NOTED OTHERWISE*

PIPE, FITTING, AND EQUIPMENT SCHEDULE			
ITEM	QTY	SIZE	DESCRIPTION
1	1	BVM90-1	"BERKLEY" 450 GPM BOOSTER PUMP, 20 HP, XXX RPM, 115-FT TDH (50 PSI), WITH MOUNTING/SUPPORT STAND
2	2	6"ø x 2-1/2"ø	FL. x FL. 90° REDUCING BEND
3	1	10"ø	MANIFOLD HDPE-4370
4	1	6"ø x 4'-6"±	HDPE-4370 FUSION-WELDED PIPE
5	1	6"ø	90° BEND HDPE-4370 FUSION-WELDED PIPE
6	1	6"ø x 3'-9"	HDPE-4370 FUSION-WELDED PIPE
7	1	6"ø x 2-1/2"ø	FL. x FL. 90° REDUCING BEND
8	1	BVM90-1-1	"BERKLEY" 320 GPM BOOSTER PUMP, 15 HP, XXX RPM, 115-FT TDH (50 PSI), WITH MOUNTING/SUPPORT STAND
9	1	4"ø x 0'-7"±	FL. x FL. CL-50 D.I.P.
10	1	2-1/2"ø x 4"ø	FL. x FL. CL-50 D.I.P.
11	1	4"ø x 9'-11"±	HDPE-4370 FUSION-WELDED PIPE
12	2	4"ø	45° BEND HDPE-4370 FUSION-WELDED PIPE
13	1	8"ø	MANIFOLD HDPE-4370
14	1	8"ø x 4'-5"±	HDPE-4370 FUSION-WELDED PIPE
15	1	8"ø	90° BEND HDPE-4370 FUSION-WELDED PIPE
16	1	8"ø x 2'-11"±	HDPE-4370 FUSION-WELDED PIPE
17	1	8"ø	45° BEND HDPE-4370 FUSION-WELDED PIPE
18	1	2"ø x 2'-0"±	SCH 80 PVC PIPE
19	6	2"ø	90° BEND SCH 80 PVC PIPE
20	1	2"ø x 6'-7"±	SCH 80 PVC PIPE
21	1	2"ø x 8'-0"±	SCH 80 PVC PIPE
22	1	2"ø x 0'-6"±	SCH 80 PVC PIPE
23	1	2"ø	45° BEND SCH 80 PVC PIPE
24	1	2"ø x 1'-11"±	SCH 80 PVC PIPE
25	1	2"ø	SCH 80 PVC CONNECTION TO STAINLESS STEEL PIPE

* OR AN APPROVED EQUAL

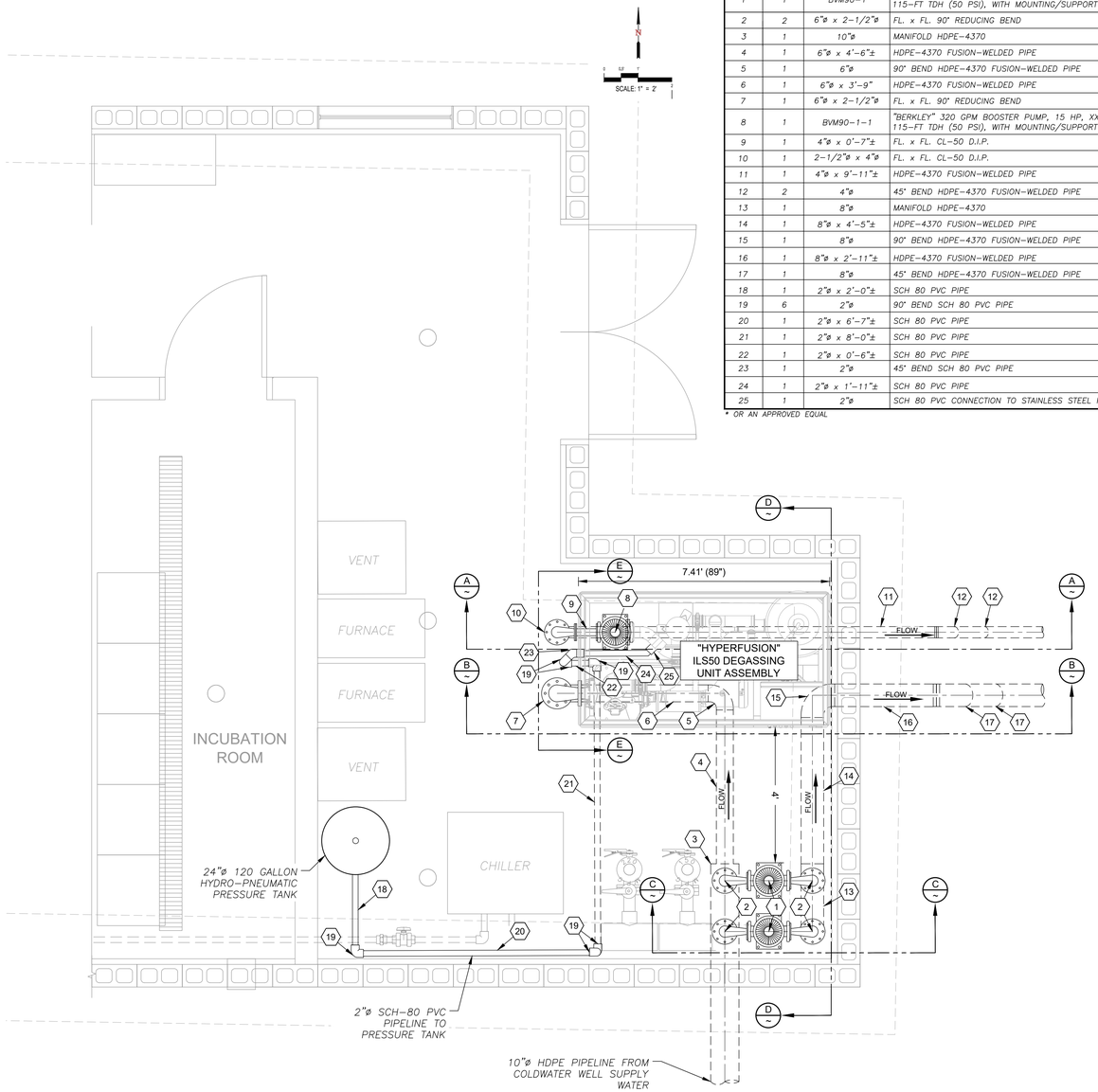

HATCHERY BUILDING - ILS50 HYPERFUSION PIPING PLAN 2

SCALE 1" = 2'

CONSTRUCTION NOTES:

1. CONTRACTOR SHALL RECOGNIZE, ACCOMMODATE, AND WORK WITHIN THE ROOM AND SPATIAL CONSTRAINTS OF THE ROOM AND EXISTING COMPONENTS THEREIN.
2. CONTRACTOR SHALL REMOVE AND REINSTALL THAT HATCHERY EQUIPMENT, COMPONENTS, AND FACILITIES NECESSARY TO LOCATE, LAND, AND INSTALL THE ILS50 HYPERFUSION UNIT, BOOSTER PUMPS, AND APPURTENANT EQUIPMENT.

REVIEWED FOR CODE COMPLIANCE
Thomas W Pearson
12/14/2023
DIVISION OF FACILITIES CONSTRUCTION AND MANAGEMENT

DFCM CODE COMPLIANCE OFFICER

NO.	REVISIONS	BY	DATE
	PUBLISHED		

This document or any part thereof in detail or design concept is the property of Forsgren Associates Inc. and shall not be copied without the written authorization of Forsgren Associates Inc.

DRAWN
DESIGNED
APPROVED
QA

ATTENTION
LINE IS 2-INCHES
AT 24"x36" SIZE
IF NOT 2-INCHES, SCALE DRAWING ACCORDINGLY

ERIC E. DURSTELER NO. 323794 10-4-23 STATE OF UTAH REGISTERED PROFESSIONAL ENGINEER

LOGAN FISH HATCHERY
UTAH DIVISION OF WILDLIFE RESOURCES
1465 WEST 200 NORTH
LOGAN, UTAH 84321

UTAH DNR WILDLIFE RESOURCES

FORSGREN Associates Inc.
95 WEST 100 SOUTH, STE. 115, LOGAN, UT 84321
PH: 435.227.0333 FAX: 435.227.0334

Blue Stakes of UTAH 811 Bluestakes.org

WARM WATER AQUACULTURE BUILDING
LOGAN HATCHERY IMPROVEMENT PROJECT

ILS50 "HYPERFUSION" DEGASSING UNIT
DEGASSING TOWER DEMOLITION & REMOVAL PLAN AND ILS50 INSTALLATION PLAN

PROJECT NO: 14-23-0005
SHEET NO: H003
DATE: 10-4-2023
PAGE NO: 166

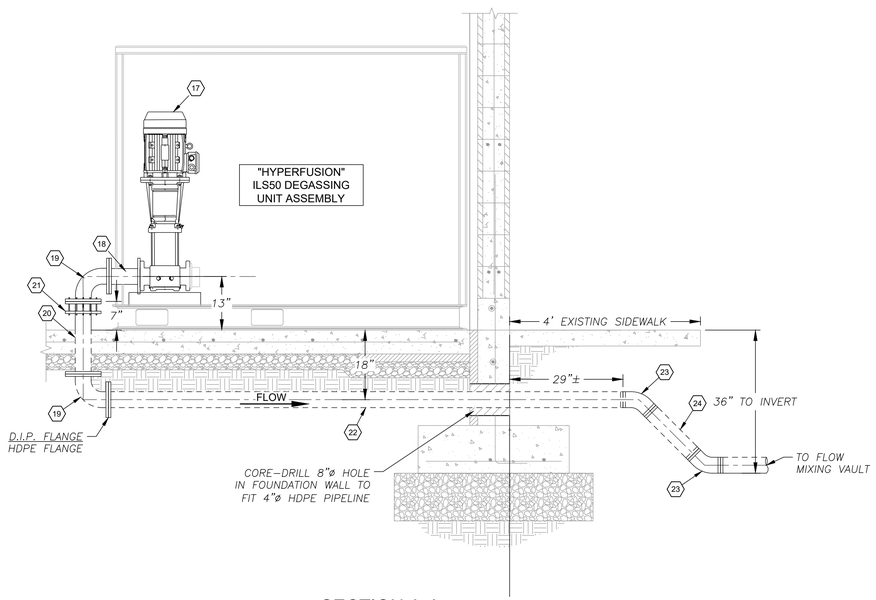

SECTION A-A
N.T.S. 1

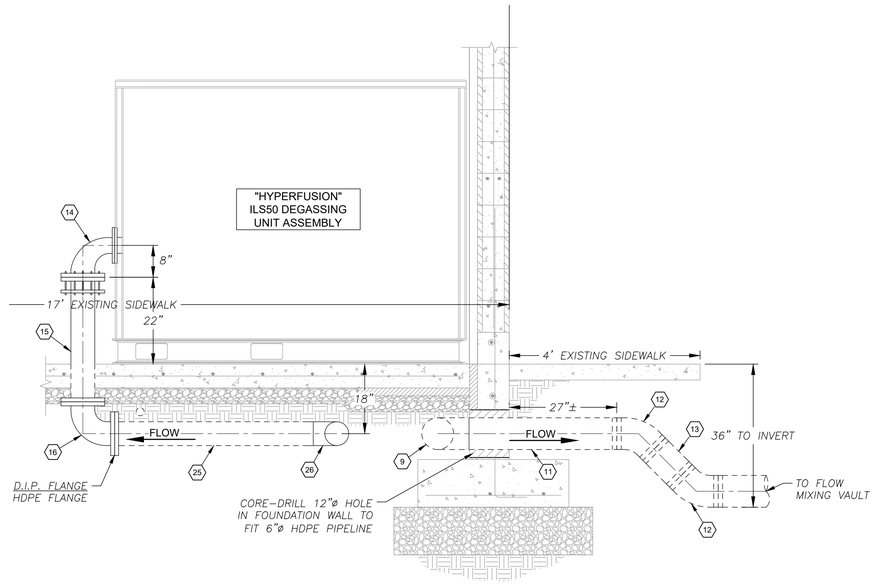

SECTION B-B
N.T.S. 2

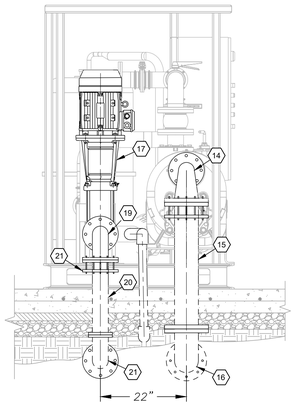

SECTION E-E
N.T.S. 4

BVM

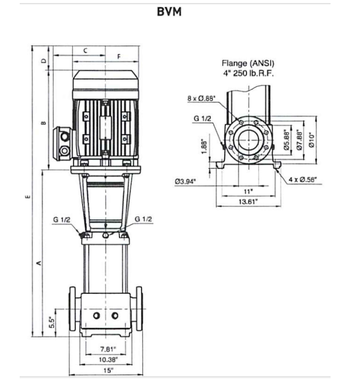

Model Number	Motor HP	Motor Service Factor	Phase	Voltage	Motor Frame	BVM Cast Iron							
						Dimensions in inches						Weight in Lbs	
						A	B	C	D	E	F	Pump End Only	Pump & Motor
BVM90-1-1	15	1.15	3	208-230/460V	254TC	24.9	20.9	12.9	3.8	68.7	12.9	181	426
BVM90-1	20	1.15	3	230/460V	254TC	24.9	14.9	10.3	3.8	65.5	10.3	181	426

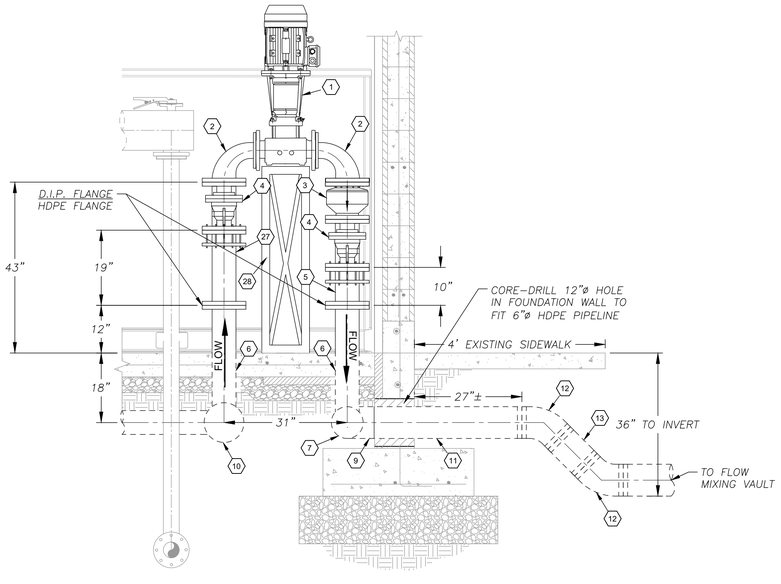

SECTION C-C
N.T.S. 3

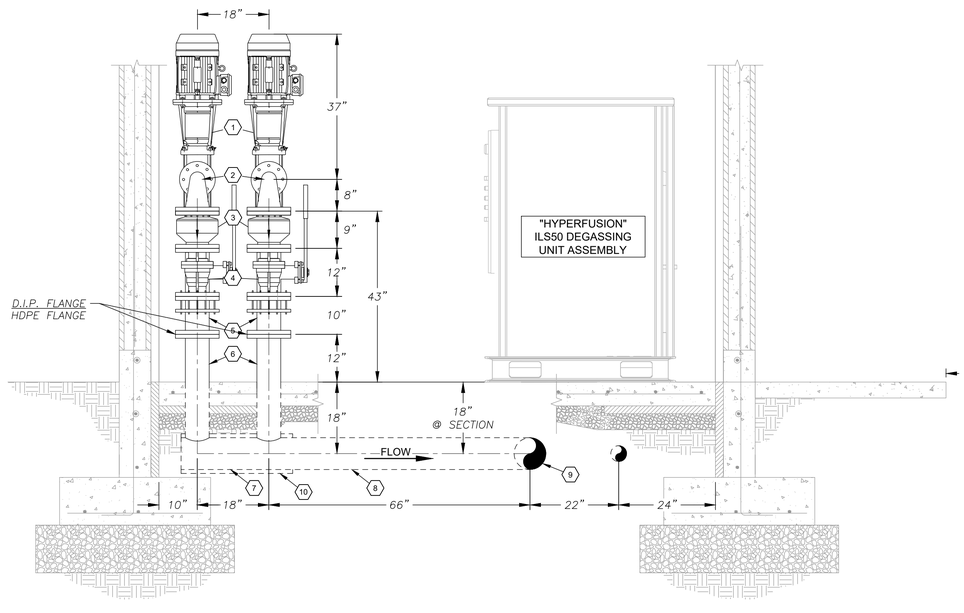

SECTION D-D
N.T.S. 5

PIPE, FITTINGS AND EQUIPMENT SCHEDULE

ITEM	QTY	SIZE	DESCRIPTION
1	2	BVM90-1	"BERKLEY" 450 GPM BOOSTER PUMP, 20 HP, 3600 RPM, 115-FT TDH (50 PSI), WITH MOUNTING/SUPPORT STAND
2	2	6"ø x 4"ø	FL. x FL. 90° REDUCING BEND (TO PUMP FLANGES)
3	2	6"ø	"FLOWMATIC" GLOBE CHECK VALVE*
4	4	6"ø	"AMERICAN VALVE" 3700 CAST IRON FLANGED END BALL VALVE
5	2	6"ø x 10"±	FL. x P.E. CL-50 D.I.P. W/ "ROMAC" DRESSER COUPLING
6	4	6"ø x 2'-2"±	HDPE-4370 FUSION-WELDED PIPE W/ FLANGE
7	1	8"ø	MANIFOLD HDPE-4370
8	1	8"ø x 7'-4"±	HDPE-4370 FUSION-WELDED PIPE
9	1	8"ø	90° BEND HDPE-4370 FUSION-WELDED PIPE
10	1	10"ø	MANIFOLD HDPE-4370
11	1	8"ø x 3'-6"±	HDPE-4370 FUSION-WELDED PIPE
12	2	8"ø	45° BEND HDPE-4370 FUSION-WELDED PIPE
13	1	8"ø x 0'-10"±	HDPE-4370 FUSION-WELDED PIPE
14	1	6"ø x 4"ø	FL. x FL. 90° REDUCING BEND
15	1	6"ø x 2'-7"±	FL. x P.E. CL-50 D.I.P. W/ "ROMAC" DRESSER COUPLING
16	1	6"ø	FL. x FL. 90° BEND
17	1	BVM90-1-1	"BERKLEY" 320 GPM BOOSTER PUMP, 15 HP, 3600 RPM, 115-FT TDH (50 PSI), WITH MOUNTING/SUPPORT STAND
18	1	4"ø x 0'-7"±	FL. x FL. CL-50 D.I.P.
19	2	4"ø	FL. x FL. 90° BEND
20	1	4"ø x 1'-6"±	FL. x FL. CL-50 D.I.P.
21	1	4"ø	"ROMAC" DRESSER COUPLING
22	1	4"ø x 10'-9"±	HDPE-4370 FUSION-WELDED PIPE
23	2	4"ø	45° BEND HDPE-4370 FUSION-WELDED PIPE
24	1	4"ø x 1'-1"±	HDPE-4370 FUSION-WELDED PIPE
25	1	6"ø x 4'-2"±	HDPE-4370 FUSION-WELDED PIPE
26	1	6"ø	90° BEND HDPE-4370 FUSION-WELDED PIPE
27	2	6"ø x 1'-7"±	FL. x P.E. CL-50 D.I.P. W/ "ROMAC" DRESSER COUPLING
28	1	–	"BERKLEY" 450 GPM BOOSTER PUMP SUPPORT – ½" THICK ANGLE STAINLESS STEEL RACK CUSTOM-FABRICATED TO ACCOMMODATE PUMPS, PIPING, AND FITTINGS.

* OR AN APPROVED EQUAL

CONSTRUCTION NOTES:

1. CONTRACTOR SHALL RECOGNIZE, ACCOMMODATE, AND WORK WITHIN THE ROOM AND SPATIAL CONSTRAINTS OF THE ROOM AND EXISTING COMPONENTS THEREIN.
2. CONTRACTOR SHALL REMOVE AND REINSTALL THAT HATCHERY EQUIPMENT, COMPONENTS, AND FACILITIES NECESSARY TO LOCATE, LAND, AND INSTALL THE ILS50 HYPERFUSION UNIT, BOOSTER PUMPS, AND APPURTENANT EQUIPMENT.

REVIEWED FOR CODE COMPLIANCE
Thomas W Peterson
12/14/2023
DIVISION OF FACILITIES CONSTRUCTION AND MANAGEMENT
DFCM CODE COMPLIANCE OFFICER

PUBLISHED
NO. | REVISIONS | BY | DATE
This document or any part thereof in detail or design concept is the property of Forsgren Associates Inc. and shall not be copied without the written authorization of Forsgren Associates Inc.

DRAWN
DESIGNED
APPROVED
QA

ATTENTION
LINE IS 2-INCHES
AT 24"x36" SIZE
IF NOT 2-INCHES, SCALE DRAWING ACCORDINGLY

LICENSED PROFESSIONAL ENGINEER
ERIC E. DURSTELER
NO. 323794
10-4-23
STATE OF UTAH

LOGAN FISH HATCHERY
UTAH DIVISION OF WILDLIFE RESOURCES
1465 WEST 200 NORTH
LOGAN, UTAH 84321

UTAH DNR WILDLIFE RESOURCES

FORSGREN Associates Inc.
95 WEST 100 SOUTH, STE. 115, LOGAN, UT 84321
PH: 435.227.0333 FAX: 435.227.0334

Blue Stakes of UTAH 811 Bluestakes.org

WARM WATER AQUACULTURE BUILDING
LOGAN HATCHERY IMPROVEMENT PROJECT

HYPERFUSION DEGASSING UNIT SECTIONS & DETAILS

PROJECT NO: 14-23-0005
SHEET NO: H004
DATE: 10-4-2023
PAGE NO: 167

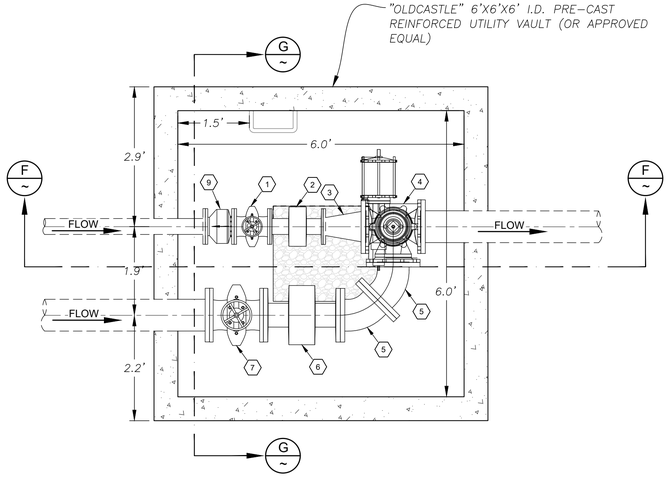

FLOW MIXING VAULT - PLAN VIEW
N.T.S. 1

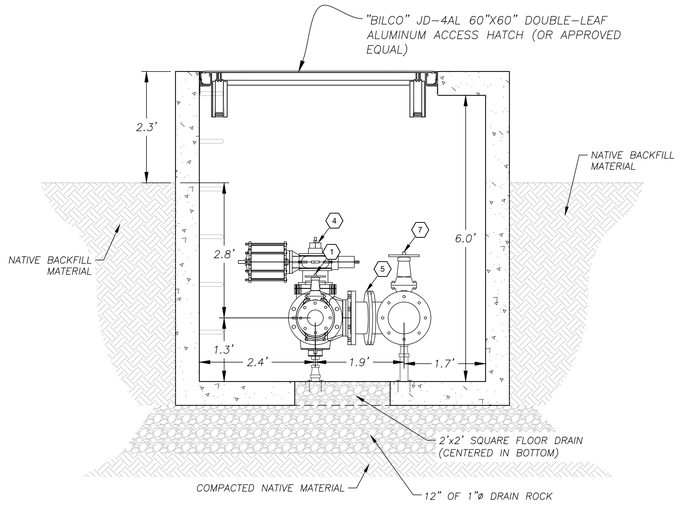

FLOW MIXING VAULT - SECTION G-G
N.T.S. 2

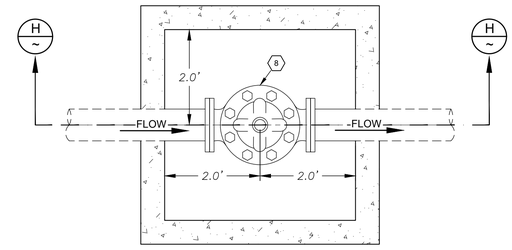

PSV/PRV VAULT - PLAN VIEW
4x4 VAULT - N.T.S. 4

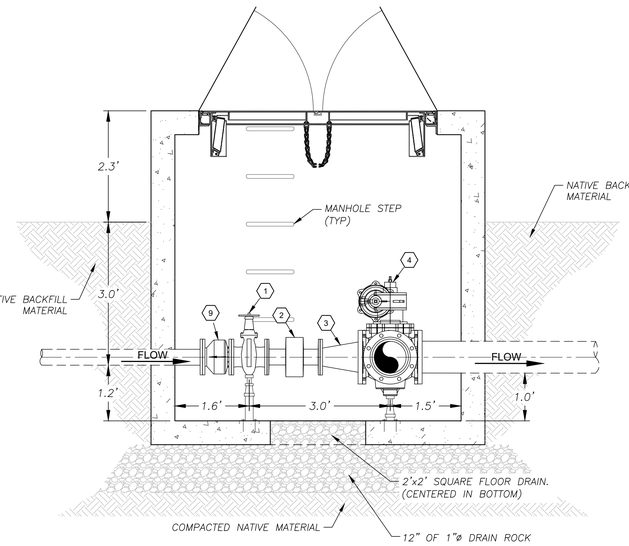

FLOW MIXING VAULT - SECTION F-F
N.T.S. 3

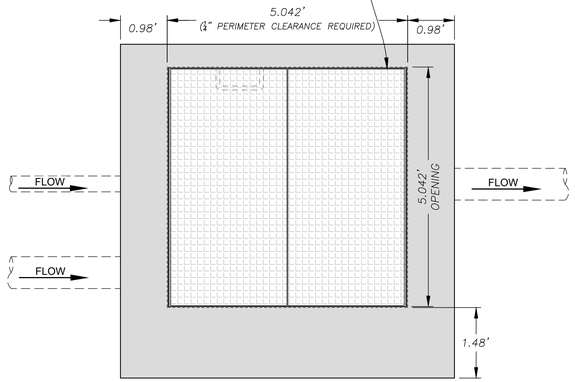

FLOW MIXING VAULT LID - w/ "BILCO" HATCH
N.T.S. 4

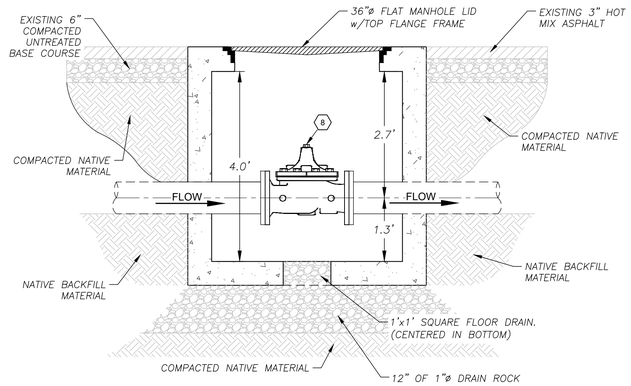

PSV/PRV VAULT - SECTION H-H
N.T.S. 4

PIPE, FITTINGS AND EQUIPMENT SCHEDULE

ITEM	QTY	SIZE	DESCRIPTION
1	1	4"ø	FL. x FL. GATE VALVE
2	1	4"ø	FL. x FL. "SIEMANS" SITRANS FM MAG 5100 W FLOW METER
3	1	8"ø x 4"ø	FL. x FL. D.I. REDUCER
4	1	8"ø	"DEZURIK" PTW/PFW 3-WAY PLUG VALVE w/ELECTRIC ACTUATOR
5	2	8"ø	FL. x FL. D.I. 45° BEND
6	1	8"ø	FL. x FL. "SIEMANS" SITRANS FM MAG 5100 W FLOW METER
7	1	8"ø	FL. x FL. GATE VALVE
8	1	8"ø	"CLA-VAL" COMBINATION PRESSURE REDUCING & PRESSURE SUSTAINING VALVE (92-01)
9	1	4"ø	"FLOWMATIC" GLOBE CHECK VALVE*

* OR AN APPROVED EQUAL

CONSTRUCTION NOTES:

1. CONTRACTOR SHALL FIELD VERIFY ALL PIPE LENGTHS AND CONNECTION ANGLES PRIOR TO CONSTRUCTION OF JOINTS.
2. CONTRACTOR SHALL COVER AND EFFECTIVELY SEAL ALL OPEN ENDS F PIPELINES AT THE END OF EACH DAY'S WORK.
3. ALL CONSTRUCTION SHALL COMPLY WITH THE LATEST INTERNATIONAL BUILDING CODE AND LOCAL BUILDING CODES, AND SHALL BE CONSISTENT WITH COMMON CONSTRUCTION PRACTICES OF THE TRADES.
4. THE CONTRACTOR SHALL VERIFY ALL UTILITY LOCATIONS PRIOR TO CONSTRUCTING THE PROJECT. ALL UTILITY LOCATIONS SHOWN ARE APPROXIMATE, EXCEPT AS NOTED.
5. ANY CONTRACTOR-CAUSED DAMAGE TO UTILITY AND/OR SERVICE LINES, SHOWN OR NOT SHOWN ON THE PLANS, SHALL BE REPAIRED OR REPLACED AT NO COST TO THE OWNER.
6. THE ANNULAR SPACE BETWEEN PIPE AND WALL PENETRATIONS SHALL BE COMPLETELY EPOXY-GROUT FILLED AND FINISHED SMOOTH.

REVIEWED FOR CODE COMPLIANCE
Thomas W Peterson
12/14/2023
DIVISION OF FACILITIES CONSTRUCTION AND MANAGEMENT
DFCM CODE COMPLIANCE OFFICER

NO.	REVISIONS	BY	DATE
	PUBLISHED		

This document or any part thereof in detail or design concept is the property of Forsgren Associates Inc. and shall not be copied without the written authorization of Forsgren Associates Inc.

DRAWN
DESIGNED
APPROVED
QA

ATTENTION
LINE IS 2-INCHES
AT 24"x36" SIZE
IF NOT 2-INCHES, SCALE DRAWING ACCORDINGLY

LICENSED PROFESSIONAL ENGINEER ERIC E. DURSTELER NO. 323794 10-4-23 STATE OF UTAH

LOGAN FISH HATCHERY
UTAH DIVISION OF WILDLIFE RESOURCES
1465 WEST 200 NORTH
LOGAN, UTAH 84321

UTAH DNR WILDLIFE RESOURCES

FORSGREN Associates Inc.
95 WEST 100 SOUTH, STE. 115, LOGAN, UT 84321
PH: 435.227.0333 FAX: 435.227.0334

Blue Stakes of UTAH 811 Bluestakes.org

WARM WATER AQUACULTURE BUILDING
LOGAN HATCHERY IMPROVEMENT PROJECT
FLOW MIXING VAULT & PSV/PRV VALVE VAULT

PROJECT NO: 14-23-0005
SHEET NO: H005
DATE: 10-4-2023
PAGE NO: 168